Project No. 25-0225.00

February 6, 2026



02/06/2026

ADDENDUM NO. 1
TO THE
DRAWINGS AND PROJECT MANUAL
FOR
KISD 2025 FRP
KLEIN I.S.D.
KLEIN, TEXAS

VLK
20445 State Highway 249, Suite 350
Houston, TX 77070
281.671.2300 voice
vlkarchitects.com

1.1 GENERAL

A. This addendum modifies the drawings and project manual, dated January 27, 2026, as noted within and shall become part of the Contract Documents.

B. Each holder of proposal documents registered with the Architect will receive a copy of the addendum. Each prime proposer is responsible for distribution of information conveyed by this addendum to its sub-proposers and suppliers.

C. Proposers shall acknowledge receipt of this addendum in the space provided on the proposal form. Failure to do so may subject proposer to disqualification.

D. A pre-proposal conference was held at 2:00 p.m., local time, Tuesday, February 3, 2026 at the Klein ISD Facility and School Services Office. Attached to this addendum is an Attendance Register and meeting agenda from that conference.

E. A site walk will be held Wednesday, February 11, 2026, at 9:00 a.m. starting at Kaiser Elementary. Reference attached map for locations and order of site visits.

F. Reference attached Klein ISD 2025-2026 School calendar.

G. Klein ISD will be operating summer school Monday through Thursday at McDougle and Ehrhardt Elementary Schools during the hours of 7:30 am to 2:30pm.

1.2 MECHANICAL, ELECTRICAL AND PLUMBING ADDENDUM ITEMS

A. Attached document by Salas O'Brien shall hereby become a part of this addendum.

1.3 REVISED DRAWINGS

A. Sheet Nos. M14.00, M33.00, M44.00, M63.00, E13.01, E32.01, E43.01, and E62.01, dated February 6, 2026 and attached hereto, are revised drawings and are hereby made a part of this addendum.

END OF ADDENDUM NO. 1

ATTENDANCE REGISTER

Reference: KISD 2025 FRP
Klein ISD

Date: Tuesday, February 3, 2026

Type of Meeting: Pre-Construction

Architect's Project No.: 25-0225.00

Name (Please print)	**Company Title**	**Phone**	**Email**
MICHELLE GALLUP	VLK	281.743.0589	mgallup@VLKARCHITECTS.com
Byron Daniels	VLK	281.841.1248	bdaniels@VLKarchitects.com
Jalon Phillips	Pogue Construction	832-287-1478	JPhillips@pogueconstruction.com
Tessa Montes	Millennium Project Solutions	832-572-2250	estimating@mps-team.com
Kyle McCashland	M Scott Construction	713-480-0872	bids@mscottconstruction.com
Michael Richelman	Salas O'Brien	281-664-1900	Michael.Richelman@salasobrien.com
Sue Bach	Klein		
Roger Graham	Topwater Construction	8326553051	roger@topwaterccsllc.com
Simmie DeVille, Jr.	Topwater Construction	281-733-9931	simmie@topwaterccsllc.com
Rob Larsen	PMY Group	832-748-0250	rob.larsen@pmygroup.com
Josh Haworth	ICI Construction	281-355-5151	bids@iciconstructioninc.com

MEETING AGENDA

Reference:	KISD 2025 FRP Klein ISD	**Architect's Project No.:**	25-0225.00
Meeting Date:	Tuesday February 03, 2026		
Meeting Time:	2:00 PM – 3:00 PM		
Meeting Location:	KISD Office		

Agenda: Pre-Proposal Conference

1. The purpose of this kickoff meeting is to review the scope of work for the Klein ISD 2025 FRP project.
2. Project Campuses: Eiland Elementary, Kaiser Elementary, McDougle Elementary, Nitsch Elementary, and Ehrhardt Elementary
3. Upcoming Dates:

Friday, Feb 6th	Addendum No.1
Tuesday, Feb 10th	Site Walk; Location and Time TBD
Friday, Feb 13th	**Last Day for Questions and Digital Qualifications statement due.** Please send to mgallup@vlkarchitects.com by 4pm.
Wednesday, Feb 18th	Addendum No.2
Tuesday, Feb 24th	**Proposals Due at 2:00pm** Klein ISD Facility and School Services Office 7520 FM 2920, Klein, TX 77379
Tuesday, April 14th	Notice to Proceed
Friday, July 31st	Substantial Completion

4. Allowance: Allow the lump sum of $450,000.00 Owner's Contingency for changes requested by the Owner.
5. Schedule of Alternates:
    a. Alternate No. 1: State in the proposal form the amount to be added to the base proposal for prepping and painting the interior partitions as indicated on the Kaiser Elementary School drawings.
    b. Alternate No. 2: State in the proposal form the amount to be added to the base proposal for prepping and painting the interior partitions as indicated on the Nitsch Elementary School drawings.
    c. Alternate No. 3: State in the proposal form the amount to be added to the base proposal for replacing Public Address System devices and cabling, as indicated on the Eiland Elementary School drawings.

d. Alternate No. 4: State in the proposal form the amount to be added to the base proposal for replacing Public Address System devices and cabling, as indicated on the McDougle Elementary School drawings.

e. Alternate No. 5: State in the proposal form the amount to be added to the base proposal for replacing the exterior site lighting at Erhardt Elementary School as indicated in the drawings.

f. Alternate No. 6: State in the proposal form the amount to be added to the base proposal for replacing Public Address System devices and cabling, as indicated on the Klenck Elementary School drawings.

g. Alternate No. 7: State in the proposal form the amount to be added to the base proposal for replacing Public Address System devices and cabling, as indicated on the Nitsch Elementary School drawings.

6. Questions

7. //

KISD 2025 FRP SITE WALK

WHEN: Wednesday, Feb 11th
TIME: 9:00am
WHERE: Start at Kaiser ES, then Klenk ES and finishing at Eiland ES
Remaining three campuses can be viewed by request.
Contact if needed: Michelle Gallup/VLK 281-743-0589

KLEIN ISD
PROMISE2PURPOSE

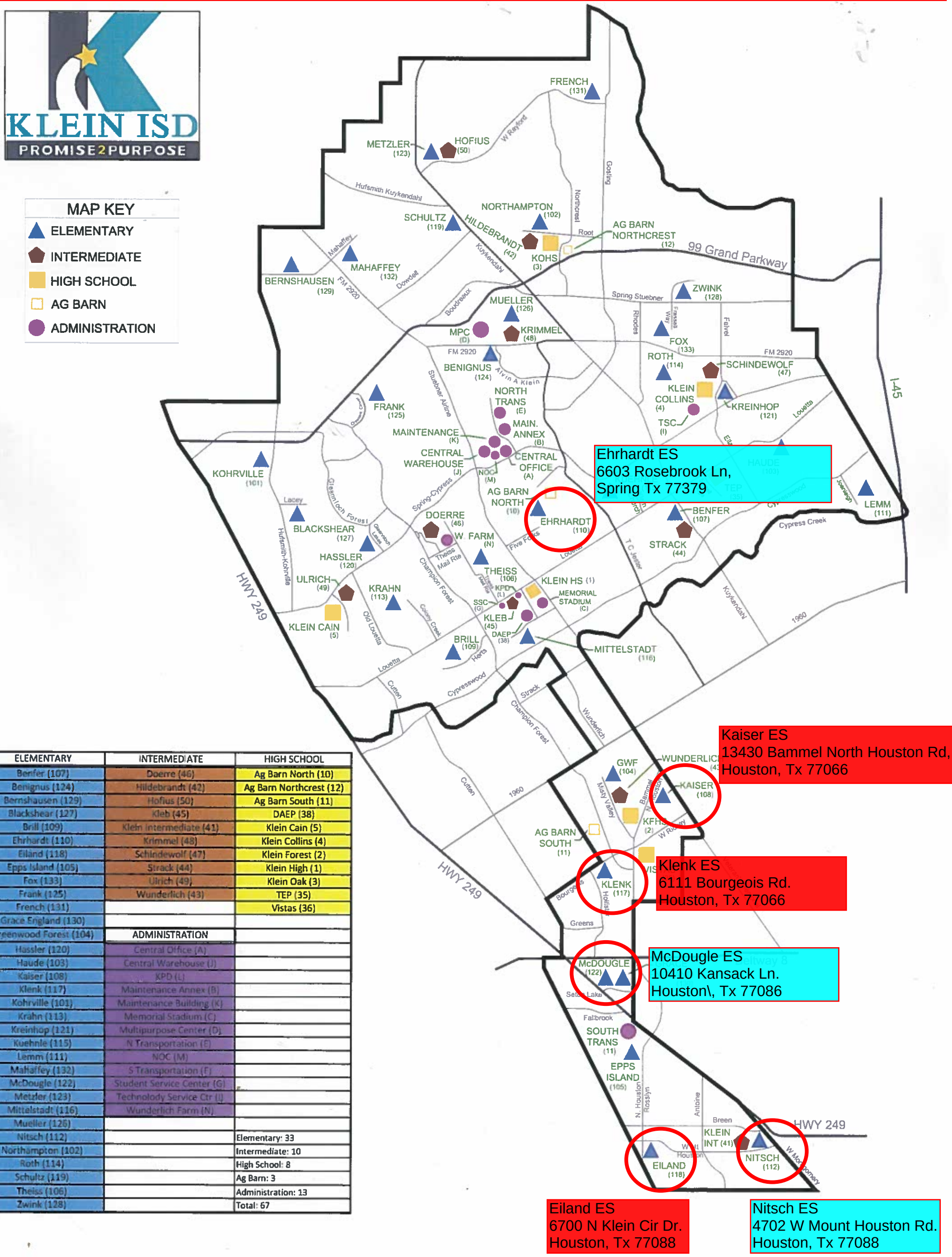

ELEMENTARY	INTERMEDIATE	HIGH SCHOOL
Benfer (107)	Doerre (46)	Ag Barn North (10)
Benignus (124)	Hildebrandt (42)	Ag Barn Northcrest (12)
Bernshausen (129)	Hofius (50)	Ag Barn South (11)
Blackshear (127)	Kleb (45)	DAEP (38)
Brill (109)	Klein Intermediate (41)	Klein Cain (5)
Ehrhardt (110)	Krimmel (48)	Klein Collins (4)
Eiland (118)	Schindewolf (47)	Klein Forest (2)
Epps Island (105)	Strack (44)	Klein High (1)
Fox (133)	Ulrich (49)	Klein Oak (3)
Frank (125)	Wunderlich (43)	TEP (35)
French (131)		Vistas (36)
Grace England (130)		
Greenwood Forest (104)	ADMINISTRATION	
Hassler (120)	Central Office (A)	
Haude (103)	Central Warehouse (J)	
Kaiser (108)	KPD (L)	
Klenk (117)	Maintenance Annex (B)	
Kohrville (101)	Maintenance Building (K)	
Krahn (113)	Memorial Stadium (C)	
Kreinhop (121)	Multipurpose Center (D)	
Kuehnle (115)	N Transportation (E)	
Lemm (111)	NOC (M)	
Mahaffey (132)	S Transportation (F)	
McDougle (122)	Student Service Center (G)	
Metzler (123)	Technology Service Ctr (I)	
Mittelstadt (116)	Wunderlich Farm (N)	
Mueller (126)		
Nitsch (112)		Elementary: 33
Northampton (102)		Intermediate: 10
Roth (114)		High School: 8
Schultz (119)		Ag Barn: 3
Theiss (106)		Administration: 13
Zwink (128)		Total: 67

KLEIN INDEPENDENT SCHOOL DISTRICT
2025-26 SCHOOL CALENDAR

KLEIN ISD
PROMISE 2 PURPOSE

FALL SEMESTER



JULY 4	Independence Day (Staff Holiday)
AUG 4-12	Teacher & Staff Workdays
AUG 13	First Day of School
SEPT 1	Labor Day (Student & Staff Holiday)
SEPT 19	Student Holiday / Teacher & Staff Workday
OCT 10	End of Grading Period 1
OCT 13-17	Fall Break (Student & Staff Holiday)
NOV 4	Election Day (Student Holiday / Teacher & Staff Workday)
NOV 24-28	Thanksgiving Break (Student & Staff Holiday)
DEC 17-19	Early Dismissal for High School Students
DEC 19	Last Day of 1st Semester / End of Grading Period 2
DEC 22-JAN 2	Winter Break (Student & Staff Holiday)

SPRING SEMESTER

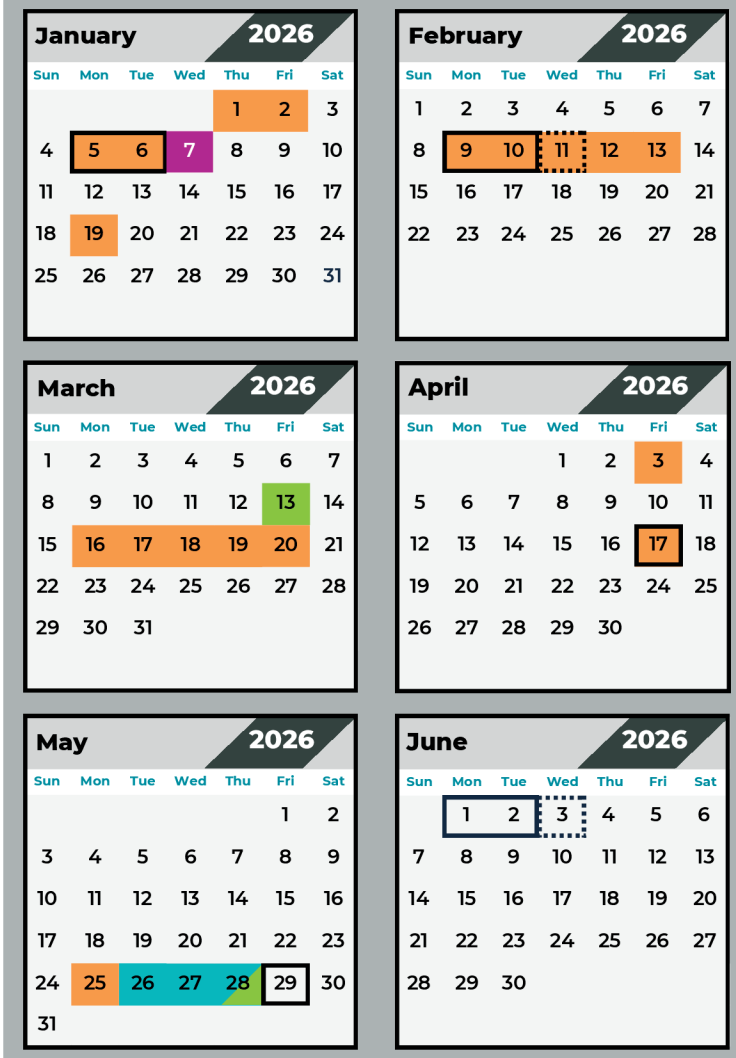

JAN 5-6	Student Holiday / Teacher & Staff Workday
JAN 7	First Day of 2nd Semester
JAN 19	Birthday of Martin Luther King, Jr. (Student & Staff Holiday)
FEB 9-10	Mid-Winter Break (Student Holiday / Teacher & Staff Workdays)
FEB 11	Mid-Winter Break (Student Holiday / Teacher Exchange Day)
FEB 12-13	Mid-Winter Break (Student & Staff Holiday)
MAR 13	End of Grading Period 3
MAR 16-20	Spring Break (Student & Staff Holiday)
APR 3	Student & Staff Holiday
APR 17	Student Holiday / Teacher & Staff Workday
MAY 25	Memorial Day (Student & Staff Holiday)
MAY 26-28	Early Dismissal for High School Students
MAY 28	Last Day of School / End of Grading Period 4
MAY 29 & JUN 1-2	Teacher & Staff Workdays
JUN 3	Teacher Exchange Day

CALENDAR KEY

- Student & Staff Holiday
- Student Holiday / Teacher & Staff Workday
- Teacher & Staff Workday
- Teacher Exchange Day
- First Day of the Semester
- Last Day of the Grading Period
- Early Dismissal for High School

GRADING PERIODS

GRADING PERIOD 1: AUG 13-OCT 10	
GRADING PERIOD 2: OCT 20-DEC 19	
GRADING PERIOD 3: JAN 7-MAR 13	
GRADING PERIOD 4: MAR 23-MAY 28	

SCHOOL HOURS

ELEMENTARY	8:05 AM to 3:25 PM
INTERMEDIATE	8:55 AM to 4:15 PM
HIGH SCHOOL	7:10 AM to 2:35 PM

7200 Spring Cypress Road, Klein, TX 77379 | (832) 249-4000 | https://kleinisd.net

KLEIN INDEPENDENT SCHOOL DISTRICT
2026-27 SCHOOL CALENDAR

KLEIN ISD
PROMISE 2 PURPOSE

FALL SEMESTER

July 2026

Sun	Mon	Tue	Wed	Thu	Fri	Sat
			1	2	3	4
5	6	7	8	9	10	11
12	13	14	15	16	17	18
19	20	21	22	23	24	25
26	27	28	29	30	31	

August 2026

Sun	Mon	Tue	Wed	Thu	Fri	Sat
						1
2	3	4	5	6	7	8
9	10	11	12	13	14	15
16	17	18	19	20	21	22
23	24	25	26	27	28	29
30	31					

September 2026

Sun	Mon	Tue	Wed	Thu	Fri	Sat
		1	2	3	4	5
6	7	8	9	10	11	12
13	14	15	16	17	18	19
20	21	22	23	24	25	26
27	28	29	30			

October 2026

Sun	Mon	Tue	Wed	Thu	Fri	Sat
				1	2	3
4	5	6	7	8	9	10
11	12	13	14	15	16	17
18	19	20	21	22	23	24
25	26	27	28	29	30	31

November 2026

Sun	Mon	Tue	Wed	Thu	Fri	Sat
1	2	3	4	5	6	7
8	9	10	11	12	13	14
15	16	17	18	19	20	21
22	23	24	25	26	27	28
29	30					

December 2026

Sun	Mon	Tue	Wed	Thu	Fri	Sat
		1	2	3	4	5
6	7	8	9	10	11	12
13	14	15	16	17	18	19
20	21	22	23	24	25	26
27	28	29	30	31		

JULY 3	Independence Day (Observed Staff Holiday)
AUG 3-11	Teacher & Staff Workdays
AUG 12	First Day of School
SEPT 7	Labor Day (Student & Staff Holiday)
SEPT 18	Student Holiday / Teacher & Staff Workday
OCT 9	End of Grading Period 1
OCT 12-16	Fall Break (Student & Staff Holiday)
OCT 19	First Day of Grading Period 2
NOV 3	Election Day (Student Holiday / Teacher & Staff Workday)
NOV 23-27	Thanksgiving Break (Student & Staff Holiday)
DEC 18	Last Day of 1st Semester / End of Grading Period 2
DEC 21-31	Winter Break (Student & Staff Holiday)

SPRING SEMESTER

January 2027

Sun	Mon	Tue	Wed	Thu	Fri	Sat
					1	2
3	4	5	6	7	8	9
10	11	12	13	14	15	16
17	18	19	20	21	22	23
24	25	26	27	28	29	30
31						

February 2027

Sun	Mon	Tue	Wed	Thu	Fri	Sat
	1	2	3	4	5	6
7	8	9	10	11	12	13
14	15	16	17	18	19	20
21	22	23	24	25	26	27
28						

March 2027

Sun	Mon	Tue	Wed	Thu	Fri	Sat
	1	2	3	4	5	6
7	8	9	10	11	12	13
14	15	16	17	18	19	20
21	22	23	24	25	26	27
28	29	30	31			

April 2027

Sun	Mon	Tue	Wed	Thu	Fri	Sat
				1	2	3
4	5	6	7	8	9	10
11	12	13	14	15	16	17
18	19	20	21	22	23	24
25	26	27	28	29	30	

May 2027

Sun	Mon	Tue	Wed	Thu	Fri	Sat
						1
2	3	4	5	6	7	8
9	10	11	12	13	14	15
16	17	18	19	20	21	22
23	24	25	26	27	28	29
30	31					

June 2027

Sun	Mon	Tue	Wed	Thu	Fri	Sat
		1	2	3	4	5
6	7	8	9	10	11	12
13	14	15	16	17	18	19
20	21	22	23	24	25	26
27	28	29	30			

JAN 1	Winter Break (Student & Staff Holiday)
JAN 4-5	Student Holiday / Teacher & Staff Workday
JAN 6	First Day of Grading Period 3
JAN 18	Birthday of Martin Luther King, Jr. (Student & Staff Holiday)
FEB 8-10	Mid-Winter Break (Student Holiday / Teacher & Staff Workdays)
FEB 11-12	Mid-Winter Break (Student & Staff Holiday)
FEB 15	Presidents Day (Student & Staff Holiday)
MAR 12	End of Grading Period 3
MAR 15-19	Spring Break (Student & Staff Holiday)
MAR 22	First Day of Grading Period 4
MAR 26	Student & Staff Holiday
APRIL 16	Student Holiday / Teacher & Staff Workday
MAY 28	Last Day of School / End of Grading Period 4
MAY 31	Memorial Day (Staff Holiday)
JUN 1-3	Teacher & Staff Workdays

CALENDAR KEY

- Student & Staff Holiday
- Student Holiday / Teacher & Staff Workday
- Teacher & Staff Workday
- Teacher Exchange Day
- First Day of the Semester
- First/Last Day of the Grading Period

GRADING PERIODS

- GRADING PERIOD 1: AUG 12-OCT 9
- GRADING PERIOD 2: OCT 19-DEC 18
- GRADING PERIOD 3: JAN 6-MAR 12
- GRADING PERIOD 4: MAR 22-MAY 28

SCHOOL HOURS

ELEMENTARY	8:05 AM to 3:25 PM
INTERMEDIATE	8:55 AM to 4:15 PM
HIGH SCHOOL	7:15 AM to 2:35 PM

7200 Spring Cypress Road, Klein, TX 77379 | (832) 249-4000 | https://kleinisd.net

February 6, 2026

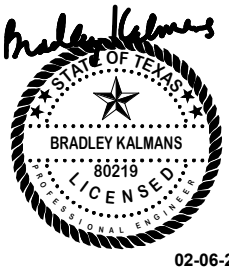

MEPT ADDENDUM NO. 1 ITEMS

1. **SECTION 23 63 00 Air Cooled Condensing Unit**

   A. This section, attached hereto, is entirely new and is hereby made a part of this addendum.

2. **SECTION 23 73 13 Air Handing Units**

   A. This section, attached hereto, is entirely new and is hereby made a part of this addendum.

3. **SECTION 23 81 24 Weatherproof Roof Mounted Air Handling Unit**

   A. This section, attached hereto, is entirely new and is hereby made a part of this addendum.

END OF SALAS O'BRIEN ADDENDUM ITEMS

STATE OF TEXAS
BRADLEY KALMANS
80219
LICENSED
PROFESSIONAL ENGINEER
02-06-2026

SECTION 23 63 00

AIR-COOLED CONDENSING UNITS (PRE-PURCHASED)

PART 1 – GENERAL

1.1 RELATED DOCUMENTS

A. Drawings and general provisions of Contract, including General and Supplementary Conditions and Division 01, apply to this Section.

B. Refer to Document 00 21 13, Instructions to Bidders and 00 22 13 Supplementary Instructions to Bidders, for substitution of materials and products.

C. Addenda issued during the bidding period that affect this section of the specifications.

1.2 WORK INCLUDED

A. The Contractor shall furnish all labor, supervision, coordination, temporary services, accessories, materials, and incidentals required to receive, store, install, connect, integrate, test, and place into full operational service all pre-purchased HVAC equipment.

B. District procurement of HVAC equipment does not relieve the Contractor of responsibility to deliver complete, operational, code-compliant HVAC systems suitable for use in an occupied K-12 educational facility.

1.3 RELATED WORK

A. Refrigerant Piping.

B. Electrical Provisions of Mechanical Work.

1.4 PRE-PURCHASED EQUIPMENT SUBMITTALS

A. The Owner has provided the reviewed Owner Pre-Purchased Equipment (OPE) submittals for the HVAC equipment included in this Project as included in the Appendix.

B. Provided OPE submittals are issued for reference, coordination, and installation purposes only.

C. The Contractor shall review the provided OPE submittals and shall be responsible for:
1. Coordinating installation requirements, dimensions, weights, clearances, and utility connections.
2. Verifying compatibility with field conditions, structural supports, and renovation constraints.
3. Incorporating OPE requirements into coordination drawings, schedules, and installation planning.

C. Review or distribution of OPE submittals does not:
1. Transfer design responsibility to the District or Architect.
2. Relieve the Contractor of responsibility for proper installation.

D. Discrepancies between OPE submittals and Contract Documents shall be reported in writing prior to installation. Failure to notify constitutes acceptance for installation purposes.

1.5 DELIVERY, STORAGE AND HANDLING

A. Inspect for transportation damage and store in a clean, dry location. Protect from weather and construction traffic.

PART 2 – PRODUCTS (REFER TO EQUIPMENT SUBMITTAL APPENDIX)

PART 3 – EXECUTION

3.1 INSTALLATION

A. Mount condensing units on 4" foundation pads and pipe as shown on Drawings or as recommended by the equipment manufacturer. Install removable core refrigerant filter dryer and sight indicating glass.

3.2 CONTROL WIRING

A. Furnish and install control wiring as required. Install control wiring in conduit.

3.3 CONTRACTOR DECLARATION

A. Installing contractor shall issue a certificate of test to the code official for all systems containing 55 lbs or more of refrigerant. The certificate shall include the test date, name of refrigerant, test medium and the field test pressure applied to the high-pressure side and the low pressure side of the system. The certification of the test shall be signed by the installing contractor and shell be made part of the public record.

3.4 START UP

A. Provide the services of a factory trained service technician employed full time by the unit manufacturer to start-up the system, or manufacturer's factory authorized representative under the supervision of the factory trained service technician. Upon completion of the installation, the system shall be started and commissioned by the manufacturer's factory authorized representative who will verify a complete fully functional system. The factory authorized representative will verify that accessories are installed and performing the specified functions. (Contractor startup is unacceptable.)

B. The written startup report shall be provided to the owner and engineer upon completion.

END OF SECTION

APPENDIX A

OWNER PRE-PURCHASED EQUIPMENT (OPE) SUBMITTALS

HTS Texas
3350 Yale Street
Houston, Texas 77018
P 832.328.1010
F 832.328.1460

SUBMITTAL DATA
APPROVAL REQUIRED

PROJECT	:	Klein ISD Eiland 2025 FRP
HTS JOB NUMBER	:	22513311 - MECH
SOLD TO	:	TBD
MECHANICAL CONSULTANT	:	Salas O'Brien
SHIPPING ADDRESS	:	TBD
HTS SALESPERSON	:	Matt McPherson
DATE	:	01/16/2026
REVISION NUMBER	:	00
SPECIFICATION SECTION	:	23 63 00
STANDARD LEAD TIME	:	

TAG	QTY	DESCRIPTION	MODEL	MANUFACTURER
CU-PE-1	1	Air Cooled Condensing Unit	DCSA	Daikin Applied

APPROVAL STAMPS



SUBMITTAL DATA

Job Name	Klein ISD Eiland ES AHU replacements
For	
Sold To	
Prepared For	
Customer PO#	
Prepared By	Matt McPherson
Date	1/16/2026

Table of Contents

Daikin Section Divider 3

Technical Data Sheet - CU-PE-1 (Eiland) 4

Drawings(4) - CU-PE-1 (Eiland) 7

Drawings(3) - CU-PE-1 (Eiland) 8

Drawings(2) - CU-PE-1 (Eiland) 9

Drawings(1) - CU-PE-1 (Eiland) 10


DAIKIN

Job Information	Technical Data Sheet
Job Name	Klein ISD Eiland ES AHU replacements
Date	1/16/2026
Submitted By	Matt McPherson
Software Version	11.40
Unit Tag	CU-PE-1 (Eiland)



Unit Overview

Model Number	Voltage V/Hz/Phase	Total Refrigeration Effect Btu/hr	AHRI Conditions		ASHRAE 90.1	Altitude
			EER	IEER		
DCSA030	460/60/3	321882.0	12.0	16.9	2022 Compliant	0

Physical

Dimensions and Weight

Length	Height	Width	Operating Weight
76.1 in	82.7 in	96.5 in	2621 lb

DCSA Connections

Connection	Connection Sizes	
CIRCUITS	Circuit 1	Circuit 2
Suction Line Circuit	1.125 in	1.125 in
Liquid Line Circuit	0.875 in	0.875 in
Hot Gas Reheat Circuit	N/A	N/A

Unit Construction and Performance

Construction:	Exterior:	Pre-painted Steel 3000 hr Salt Spray ASTM B-117

Rigging Information

Lugs per side	2 Lugs per Side

Electrical

Voltage	MCA	MROPD	SCCR
460/60/3 V/Hz/Phase	64.5 A	80 A	10 kAIC

Note:	Use only copper supply wires with ampacity based on 75° C conductor rating. Connections to terminals must be made with copper lugs and copper wire.

DX Cooling

Cooling Performance

Capacity Total Btu/hr	Refrigerant Type	Ambient Air Temperature		Suction Temperature °F
		Dry Bulb °F	Wet Bulb °F	
321882.0	R32	95	75.0	45.0

Unit

Model Number:	DCSA030
Type:	Applied
Approval:	ETL - USA

Condensing Section

Compressor

Type	Quantity	Refrigerant Charge		Total Power	Capacity Control/Min Turndown	Refrigerant Type
		Circuit1	Circuit 2			
Fixed Scroll	2	17.9	19.2	22.7	4 Step with 25% turndown	R32

Compressor Amps:

Compressor 1	Fixed	25.1 A
Compressor 2	Fixed	25.1 A

Condenser Coil

Type	Fins Per Inch	Rows	Fin Material
Aluminum tube micro channel	23	Micro Channel	Aluminum

Low Ambient Control:	Speedtrol - Operation to 25 degrees F

Condenser Fan Motors

Number of Motors	Full Load Current
4	2.0 A
Condenser Control	Speedtrol Modulating Control

AHRI 360 Certified Data at AHRI 360 Standard Conditions

Net Capacity	Efficiency		ASHRAE 90.1
321882.0	12.0 EER	16.9 IEER	2022 Compliant

Sound

Casing Radiated Sound Power (db)

63 Hz	125 Hz	250 Hz	500 Hz	1 kHz	2 kHz	4 kHz	8 kHz
44	78	83	87	88	86	85	82

Options

Unit

Hot Gas Bypass:	None
Condenser Coil Options:	Condenser with built in hail protection

Electrical

Field Connection	Standard Power Block
Wiring Options	Standard
GFI Receptacle	Field powered

Unit Control

Temperature Controls:	No temp control, 115 V transformer
Low Ambient Control:	Speedtrol - Operation to 25 degrees F

Controls

Unit Controls:	Full Refrigeration Only Controls

Warranty

Parts:	5 Year Parts
Compressor:	5 Year Compressor Warranty

AHRI Certification

All equipment is rated and certified in accordance with AHRI 360.

Accessories

Optional

Part Number	Description
910507056	Field installed TXVs for circuit #1 & #2 (qty 2). Danfoss Model TGE10-8
910486378	150' Harness for Refrigerant Leak Detection
910507063	Field Installed Liquid Line Solenoid Valves - 1-1/8" (qty 2)
910507064	75' Harness for Field installed Liquid Line Solenoid

CW S4= 587 lbs

CW S3= 818 lbs

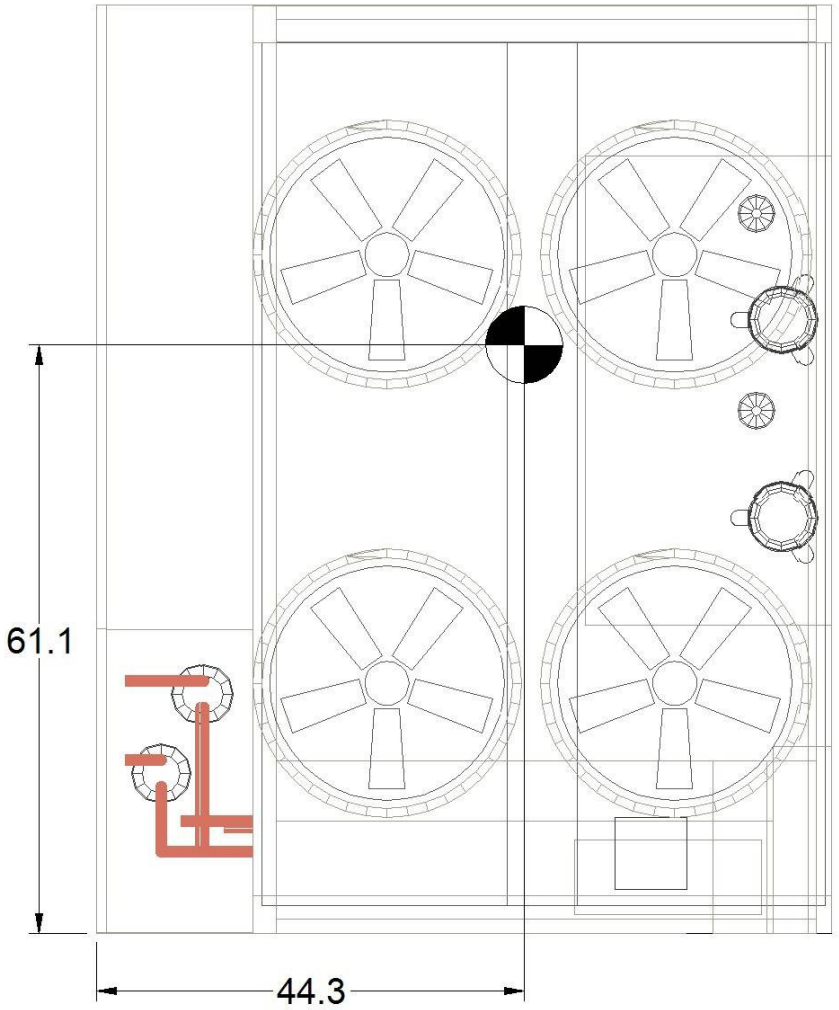

CW S1= 770 lbs

CW S2= 553 lbs

Product Drawing	Unit Tag: CU-PE-1 (Eiland)			Sales Office: HTS Texas			DAIKIN
Product:	Project Name: Klein ISD Eiland ES AHU			Sales Engineer:			13600 Industrial Park Blvd. Minneapolis, MN 55441
Model: DCSA030	Jan. 16, 2026	Ver/Rev:	Sheet: 1 of 1	Scale: NTS	Tolerance: +/- 0.25"	Dwg Units: in [mm]	www.DaikinApplied.com Software Version: 11.40

No change to this drawing may be made unless approved in writing by Daikin Applied. Purchaser must determine that the equipment is fit and sufficient for the job specifications.

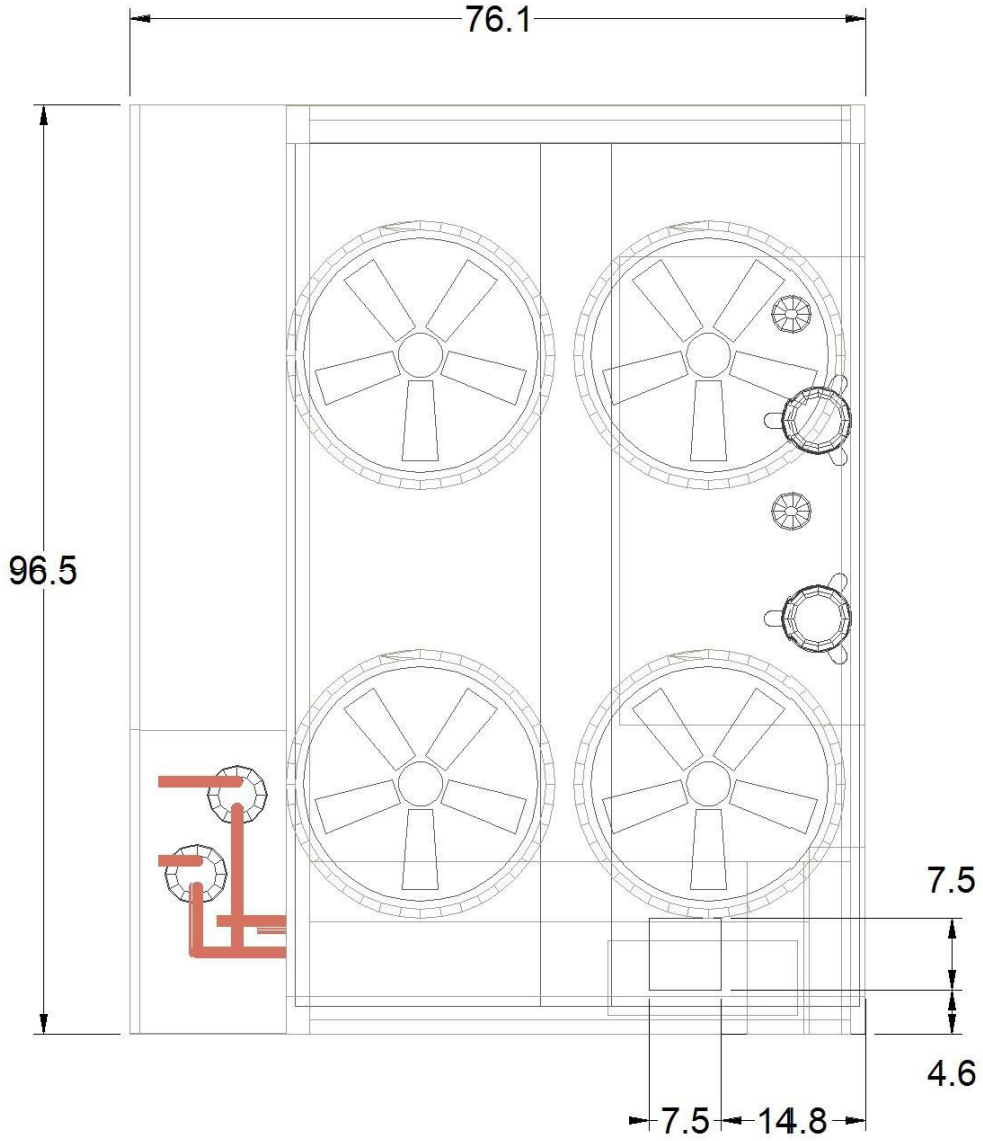

Product Drawing	Unit Tag: CU-PE-1 (Eiland)			Sales Office: HTS Texas			DAIKIN
Product:	Project Name: Klein ISD Eiland ES AHU			Sales Engineer:			13600 Industrial Park Blvd. Minneapolis, MN 55441
Model: DCSA030	Jan. 16, 2026	Ver/Rev:	Sheet: 1 of 1	Scale: NTS	Tolerance: +/- 0.25"	Dwg Units: in [mm]	www.DaikinApplied.com Software Version: 11.40

No change to this drawing may be made unless approved in writing by Daikin Applied. Purchaser must determine that the equipment is fit and sufficient for the job specifications.

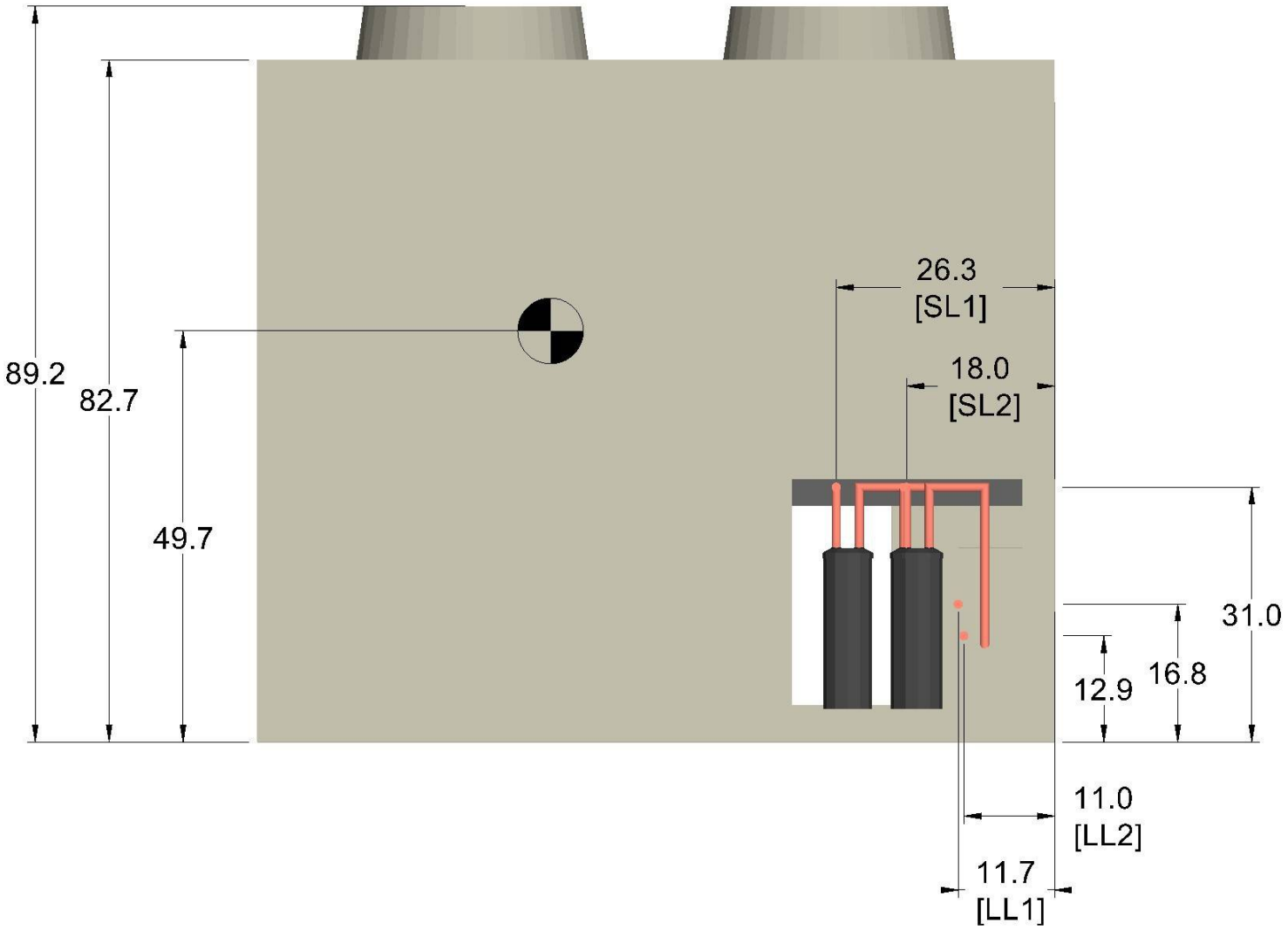

Product Drawing	Unit Tag: CU-PE-1 (Eiland)			Sales Office: HTS Texas			
Product:	Project Name: Klein ISD Eiland ES AHU			Sales Engineer:			
Model: DCSA030	Jan. 16, 2026	Ver/Rev:	Sheet: 1 of 1	Scale: NTS	Tolerance: +/- 0.25"	Dwg Units: in [mm]	

DAIKIN
13600 Industrial Park Blvd. Minneapolis, MN 55441
www.DaikinApplied.com Software Version: 11.40

No change to this drawing may be made unless approved in writing by Daikin Applied. Purchaser must determine that the equipment is fit and sufficient for the job specifications.

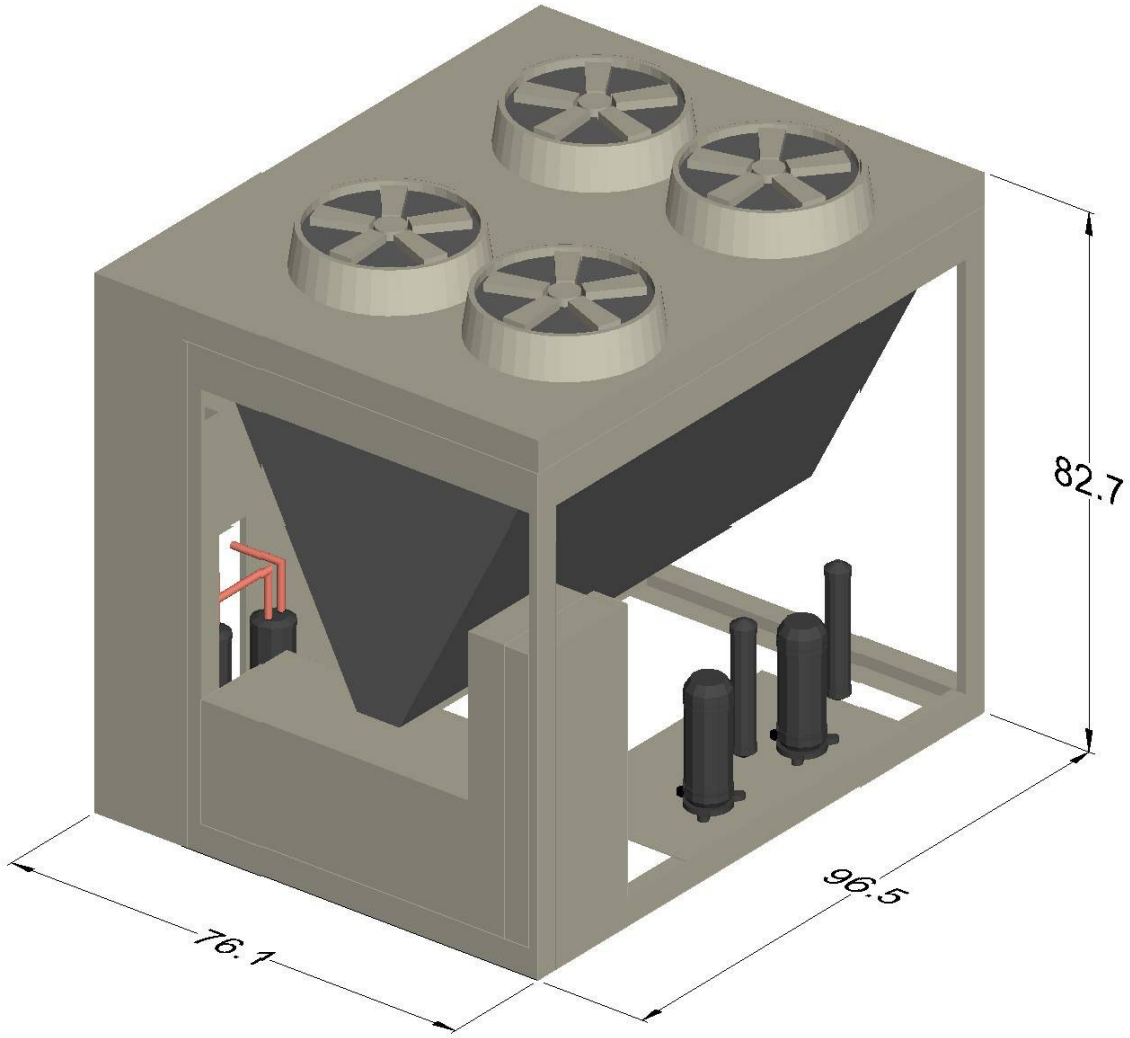

Product Drawing	Unit Tag: CU-PE-1 (Eiland)			Sales Office: HTS Texas			DAIKIN
Product:	Project Name: Klein ISD Eiland ES AHU			Sales Engineer:			13600 Industrial Park Blvd. Minneapolis, MN 55441
Model: DCSA030	Jan. 16, 2026	Ver/Rev:	Sheet: 1 of 1	Scale: NTS	Tolerance: +/- 0.25"	Dwg Units: in [mm]	www.DaikinApplied.com Software Version: 11.40

No change to this drawing may be made unless approved in writing by Daikin Applied. Purchaser must determine that the equipment is fit and sufficient for the job specifications.

HTS Texas
3350 Yale Street
Houston, Texas 77018
P 832.328.1010
F 832.328.1460

SUBMITTAL DATA
APPROVAL REQUIRED

PROJECT	:	Klein ISD Kaiser 2025 FRP
HTS JOB NUMBER	:	22513311 - MECH
SOLD TO	:	TBD
MECHANICAL CONSULTANT	:	Salas O'Brien
SHIPPING ADDRESS	:	TBD
HTS SALESPERSON	:	Matt McPherson
DATE	:	01/16/2026
REVISION NUMBER	:	00
SPECIFICATION SECTION	:	23 63 00
STANDARD LEAD TIME	:	

TAG	QTY	DESCRIPTION	MODEL	MANUFACTURER
CU-PE-1	1	Air Cooled Condensing Unit	DCSA	Daikin Applied

APPROVAL STAMPS



SUBMITTAL DATA

Job Name	Klein ISD Kaiser ES AHU replacments
For	
Sold To	
Prepared For	
Customer PO#	
Prepared By	Erick Beltran
Date	1/16/2026

Table of Contents

Daikin Section Divider 3

Technical Data Sheet - CU-PE-1 (Kaiser) 4

Drawings(1) - CU-PE-1 (Kaiser) 7

Drawings(2) - CU-PE-1 (Kaiser) 8

Drawings(3) - CU-PE-1 (Kaiser) 9

Drawings(4) - CU-PE-1 (Kaiser) 10


DAIKIN

Job Information	Technical Data Sheet
Job Name	Klein ISD Kaiser ES AHU replacments
Date	1/16/2026
Submitted By	Erick Beltran
Software Version	11.40
Unit Tag	CU-PE-1 (Kaiser)



Unit Overview

Model Number	Voltage V/Hz/Phase	Total Refrigeration Effect Btu/hr	AHRI Conditions		ASHRAE 90.1	Altitude
			EER	IEER		
DCSA030	460/60/3	321882.0	12.0	16.9	2022 Compliant	0

Physical

Dimensions and Weight

Length	Height	Width	Operating Weight
76.1 in	82.7 in	96.5 in	2621 lb

DCSA Connections

Connection	Connection Sizes	
CIRCUITS	Circuit 1	Circuit 2
Suction Line Circuit	1.125 in	1.125 in
Liquid Line Circuit	0.875 in	0.875 in
Hot Gas Reheat Circuit	N/A	N/A

Unit Construction and Performance

Construction:	Exterior:	Pre-painted Steel 3000 hr Salt Spray ASTM B-117

Rigging Information

Lugs per side	2 Lugs per Side

Electrical

Voltage	MCA	MROPD	SCCR
460/60/3 V/Hz/Phase	64.5 A	80 A	10 kAIC

Note:	Use only copper supply wires with ampacity based on 75° C conductor rating. Connections to terminals must be made with copper lugs and copper wire.

DX Cooling

Cooling Performance

Capacity	Refrigerant Type	Ambient Air Temperature		Suction Temperature °F
Total Btu/hr		Dry Bulb °F	Wet Bulb °F	
321882.0	R32	95	75.0	45.0

Unit

Model Number:	DCSA030
Type:	Applied
Approval:	ETL - USA

Condensing Section

Compressor

Type	Quantity	Refrigerant Charge		Total Power	Capacity Control/Min Turndown	Refrigerant Type
		Circuit1	Circuit 2			
Fixed Scroll	2	17.9	19.2	22.7	4 Step with 25% turndown	R32

Compressor Amps:

Compressor 1	Fixed	25.1 A
Compressor 2	Fixed	25.1 A

Condenser Coil

Type	Fins Per Inch	Rows	Fin Material
Aluminum tube micro channel	23	Micro Channel	Aluminum

Low Ambient Control:	Speedtrol - Operation to 25 degrees F

Condenser Fan Motors

Number of Motors	Full Load Current
4	2.0 A
Condenser Control	Speedtrol Modulating Control

AHRI 360 Certified Data at AHRI 360 Standard Conditions

Net Capacity	Efficiency		ASHRAE 90.1
321882.0	12.0 EER	16.9 IEER	2022 Compliant

Sound

Casing Radiated Sound Power (db)

63 Hz	125 Hz	250 Hz	500 Hz	1 kHz	2 kHz	4 kHz	8 kHz
44	78	83	87	88	86	85	82

Options

Unit

Hot Gas Bypass:	None
Condenser Coil Options:	Condenser with built in hail protection

Electrical

Field Connection	Standard Power Block
Wiring Options	Standard
GFI Receptacle	Field powered

Unit Control

Temperature Controls:	No temp control, 115 V transformer
Low Ambient Control:	Speedtrol - Operation to 25 degrees F

Controls

Unit Controls:	Full Refrigeration Only Controls

Warranty

Parts:	5 Year Parts
Compressor:	5 Year Compressor Warranty

AHRI Certification

All equipment is rated and certified in accordance with AHRI 360.

Accessories

Optional

Part Number	Description
910507063	Field Installed Liquid Line Solenoid Valves - 1-1/8" (qty 2)
910507056	Field installed TXVs for circuit #1 & #2 (qty 2). Danfoss Model TGE10-8
910486378	150' Harness for Refrigerant Leak Detection
910507064	75' Harness for Field installed Liquid Line Solenoid

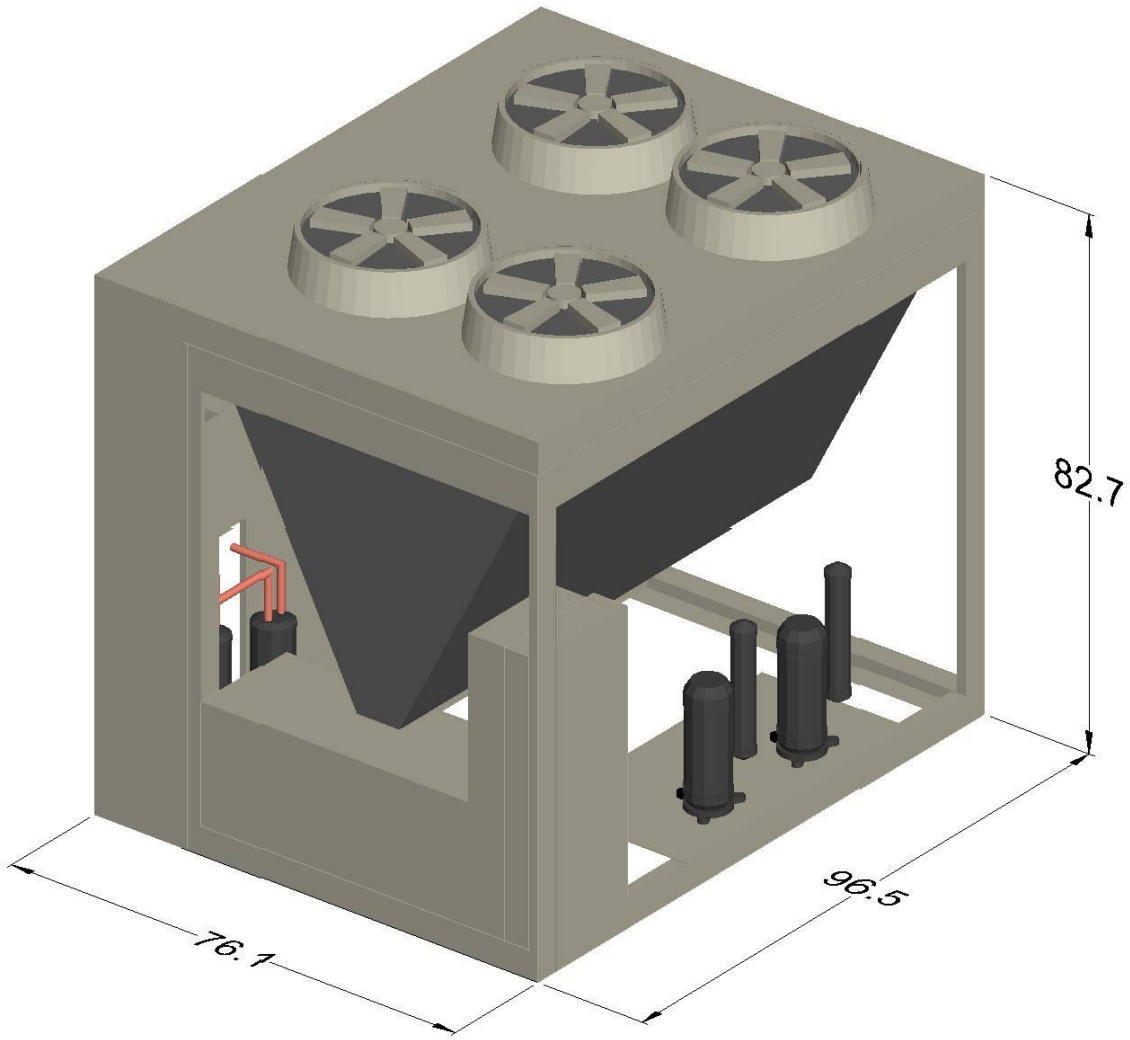

Product Drawing	Unit Tag: CU-PE-1 (Kaiser)			Sales Office: HTS Texas			DAIKIN
Product:	Project Name: Klein ISD Kaiser ES AHU			Sales Engineer:			13600 Industrial Park Blvd. Minneapolis, MN 55441
Model: DCSA030	Jan. 16, 2026	Ver/Rev:	Sheet: 1 of 1	Scale: NTS	Tolerance: +/- 0.25"	Dwg Units: in [mm]	www.DaikinApplied.com Software Version: 11.40

No change to this drawing may be made unless approved in writing by Daikin Applied. Purchaser must determine that the equipment is fit and sufficient for the job specifications.

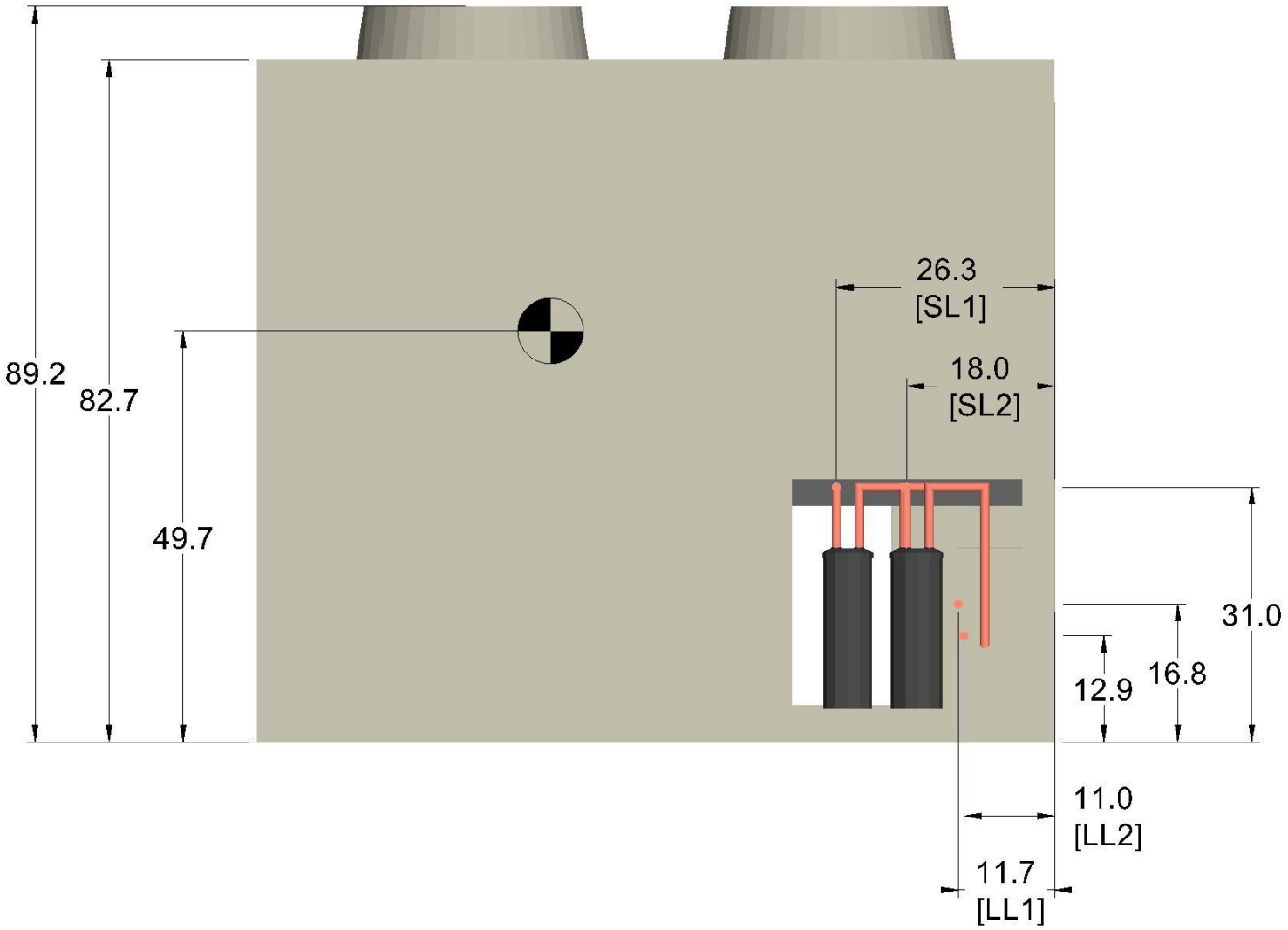

Product Drawing	Unit Tag: CU-PE-1 (Kaiser)			Sales Office: HTS Texas			
Product:	Project Name: Klein ISD Kaiser ES AHU			Sales Engineer:			
Model: DCSA030	Jan. 16, 2026	Ver/Rev:	Sheet: 1 of 1	Scale: NTS	Tolerance: +/- 0.25"	Dwg Units: in [mm]	

DAIKIN
13600 Industrial Park Blvd. Minneapolis, MN 55441
www.DaikinApplied.com Software Version: 11.40

No change to this drawing may be made unless approved in writing by Daikin Applied. Purchaser must determine that the equipment is fit and sufficient for the job specifications.

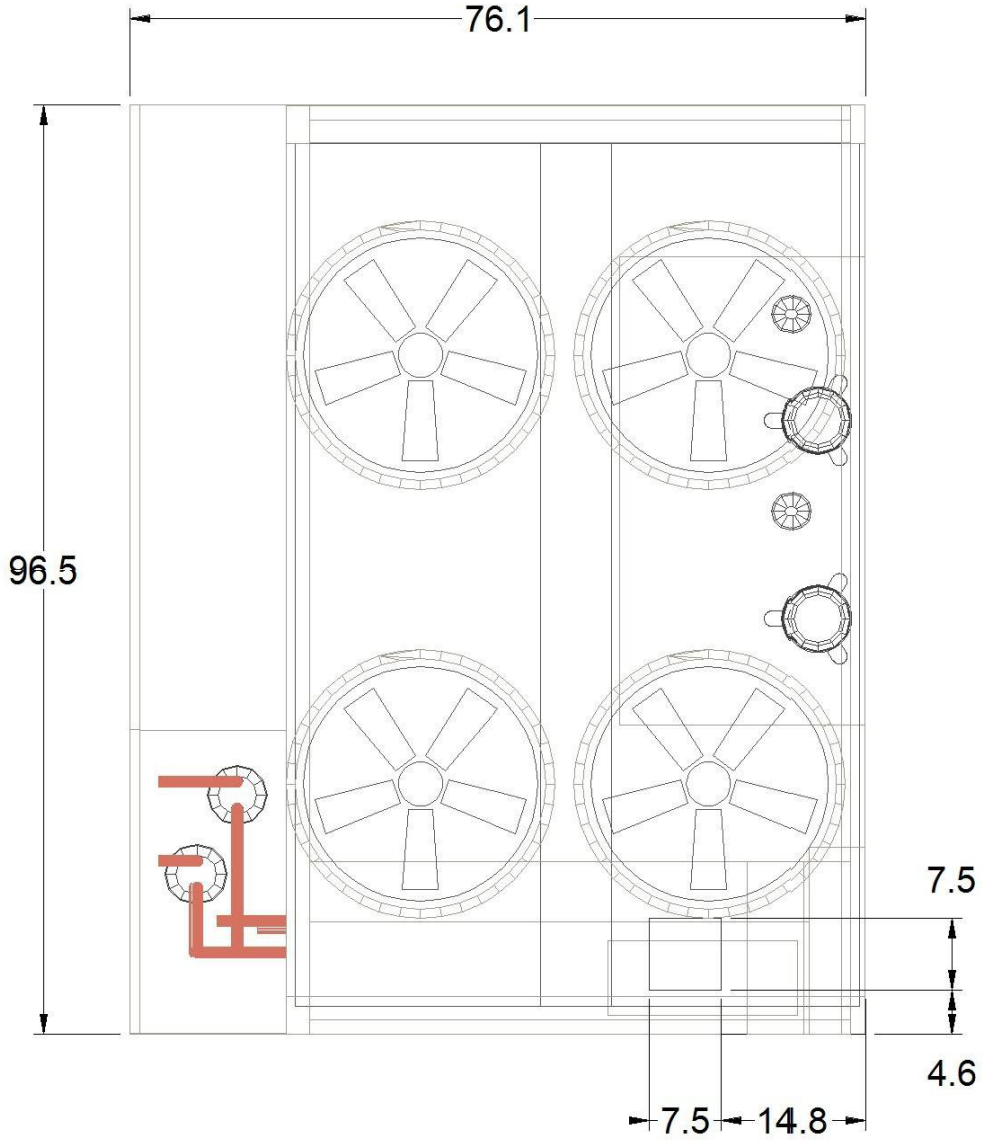

Product Drawing	Unit Tag: CU-PE-1 (Kaiser)			Sales Office: HTS Texas			DAIKIN
Product:	Project Name: Klein ISD Kaiser ES AHU			Sales Engineer:			13600 Industrial Park Blvd. Minneapolis, MN 55441
Model: DCSA030	Jan. 16, 2026	Ver/Rev:	Sheet: 1 of 1	Scale: NTS	Tolerance: +/- 0.25"	Dwg Units: in [mm]	www.DaikinApplied.com Software Version: 11.40

No change to this drawing may be made unless approved in writing by Daikin Applied. Purchaser must determine that the equipment is fit and sufficient for the job specifications.

CW S4= 587 lbs

CW S3= 818 lbs

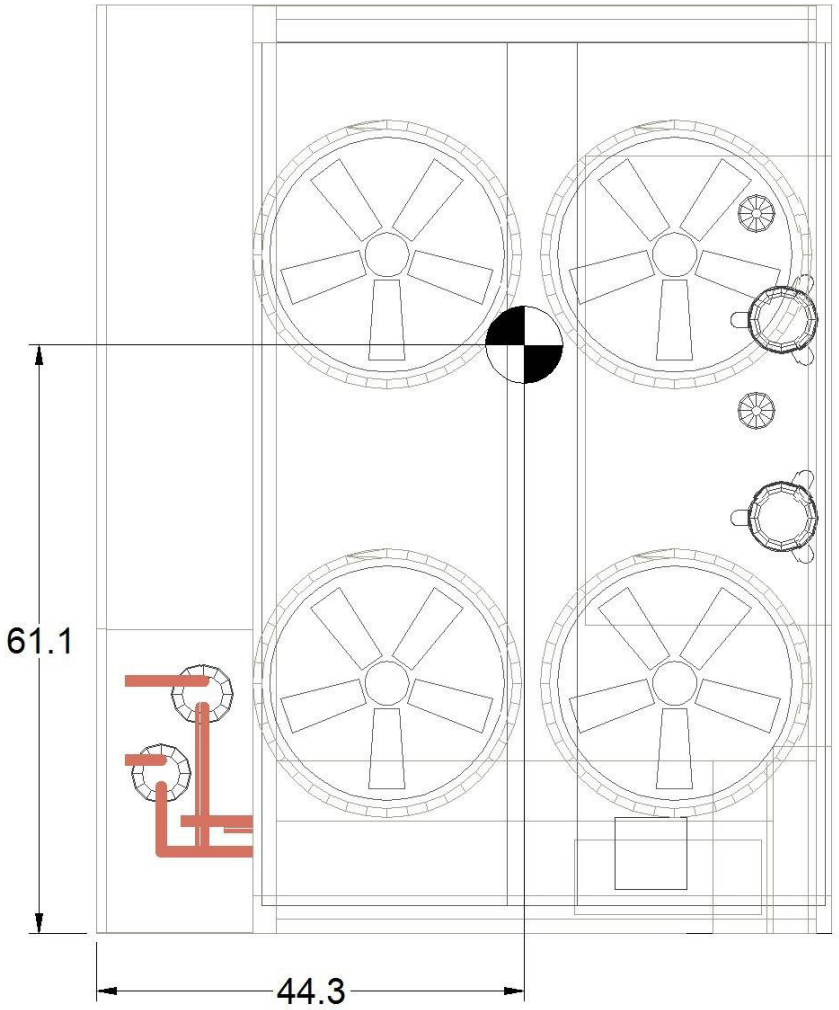

CW S1= 770 lbs

CW S2= 553 lbs

Product Drawing	Unit Tag: CU-PE-1 (Kaiser)			Sales Office: HTS Texas			DAIKIN
Product:	Project Name: Klein ISD Kaiser ES AHU			Sales Engineer:			13600 Industrial Park Blvd. Minneapolis, MN 55441
Model: DCSA030	Jan. 16, 2026	Ver/Rev:	Sheet: 1 of 1	Scale: NTS	Tolerance: +/- 0.25"	Dwg Units: in [mm]	www.DaikinApplied.com Software Version: 11.40

No change to this drawing may be made unless approved in writing by Daikin Applied. Purchaser must determine that the equipment is fit and sufficient for the job specifications.

HTS Texas
3350 Yale Street
Houston, Texas 77018
P 832.328.1010
F 832.328.1460

SUBMITTAL DATA
APPROVAL REQUIRED

PROJECT	:	Klein ISD Klenk 2025 FRP
HTS JOB NUMBER	:	22513311 - MECH
SOLD TO	:	TBD
MECHANICAL CONSULTANT	:	Salas O'Brien
SHIPPING ADDRESS	:	TBD
HTS SALESPERSON	:	Matt McPherson
DATE	:	01/16/2026
REVISION NUMBER	:	00
SPECIFICATION SECTION	:	23 63 00
STANDARD LEAD TIME	:	

TAG	QTY	DESCRIPTION	MODEL	MANUFACTURER
CU-PE-1	1	Air Cooled Condensing Unit	DCSA	Daikin Applied

APPROVAL STAMPS



SUBMITTAL DATA

Job Name	Klein ISD Klenk ES AHU replacements
For	
Sold To	
Prepared For	
Customer PO#	
Prepared By	Erick Beltran
Date	1/16/2026

Table of Contents

Daikin Section Divider 3

Technical Data Sheet - CU-PE-1 (Klenk) 4

Drawings(1) - CU-PE-1 (Klenk) 7

Drawings(2) - CU-PE-1 (Klenk) 8

Drawings(3) - CU-PE-1 (Klenk) 9

Drawings(4) - CU-PE-1 (Klenk) 10


DAIKIN

Job Information	Technical Data Sheet
Job Name	Klein ISD Klenk ES AHU replacements
Date	1/16/2026
Submitted By	Erick Beltran
Software Version	11.40
Unit Tag	CU-PE-1 (Klenk)



Unit Overview

Model Number	Voltage V/Hz/Phase	Total Refrigeration Effect Btu/hr	AHRI Conditions		ASHRAE 90.1	Altitude
			EER	IEER		
DCSA030	460/60/3	321882.0	12.0	16.9	2022 Compliant	0

Physical

Dimensions and Weight

Length	Height	Width	Operating Weight
76.1 in	82.7 in	96.5 in	2621 lb

DCSA Connections

Connection	Connection Sizes	
CIRCUITS	Circuit 1	Circuit 2
Suction Line Circuit	1.125 in	1.125 in
Liquid Line Circuit	0.875 in	0.875 in
Hot Gas Reheat Circuit	N/A	N/A

Unit Construction and Performance

Construction:	Exterior:	Pre-painted Steel 3000 hr Salt Spray ASTM B-117

Rigging Information

Lugs per side	2 Lugs per Side

Electrical

Voltage	MCA	MROPD	SCCR
460/60/3 V/Hz/Phase	64.5 A	80 A	10 kAIC

Note:	Use only copper supply wires with ampacity based on 75° C conductor rating. Connections to terminals must be made with copper lugs and copper wire.

DX Cooling

Cooling Performance

Capacity Total Btu/hr	Refrigerant Type	Ambient Air Temperature		Suction Temperature °F
		Dry Bulb °F	Wet Bulb °F	
321882.0	R32	95	75.0	45.0

Unit

Model Number:	DCSA030
Type:	Applied
Approval:	ETL - USA

Condensing Section

Compressor

Type	Quantity	Refrigerant Charge		Total Power	Capacity Control/Min Turndown	Refrigerant Type
		Circuit1	Circuit 2			
Fixed Scroll	2	17.9	19.2	22.7	4 Step with 25% turndown	R32

Compressor Amps:

Compressor 1	Fixed	25.1 A
Compressor 2	Fixed	25.1 A

Condenser Coil

Type	Fins Per Inch	Rows	Fin Material
Aluminum tube micro channel	23	Micro Channel	Aluminum

Low Ambient Control:	Speedtrol - Operation to 25 degrees F

Condenser Fan Motors

Number of Motors	Full Load Current
4	2.0 A
Condenser Control	Speedtrol Modulating Control

AHRI 360 Certified Data at AHRI 360 Standard Conditions

Net Capacity	Efficiency		ASHRAE 90.1
321882.0	12.0 EER	16.9 IEER	2022 Compliant

Sound

Casing Radiated Sound Power (db)

63 Hz	125 Hz	250 Hz	500 Hz	1 kHz	2 kHz	4 kHz	8 kHz
44	78	83	87	88	86	85	82

Options

Unit

Hot Gas Bypass:	None
Condenser Coil Options:	Condenser with built in hail protection

Electrical

Field Connection	Standard Power Block
Wiring Options	Standard
GFI Receptacle	Field powered

Unit Control

Temperature Controls:	No temp control, 115 V transformer
Low Ambient Control:	Speedtrol - Operation to 25 degrees F

Controls

Unit Controls:	Full Refrigeration Only Controls

Warranty

Parts:	5 Year Parts
Compressor:	5 Year Compressor Warranty

AHRI Certification

All equipment is rated and certified in accordance with AHRI 360.

Accessories

Optional

Part Number	Description
910507056	Field installed TXVs for circuit #1 & #2 (qty 2). Danfoss Model TGE10-8
910507063	Field Installed Liquid Line Solenoid Valves - 1-1/8" (qty 2)
910486378	150' Harness for Refrigerant Leak Detection
910507064	75' Harness for Field installed Liquid Line Solenoid

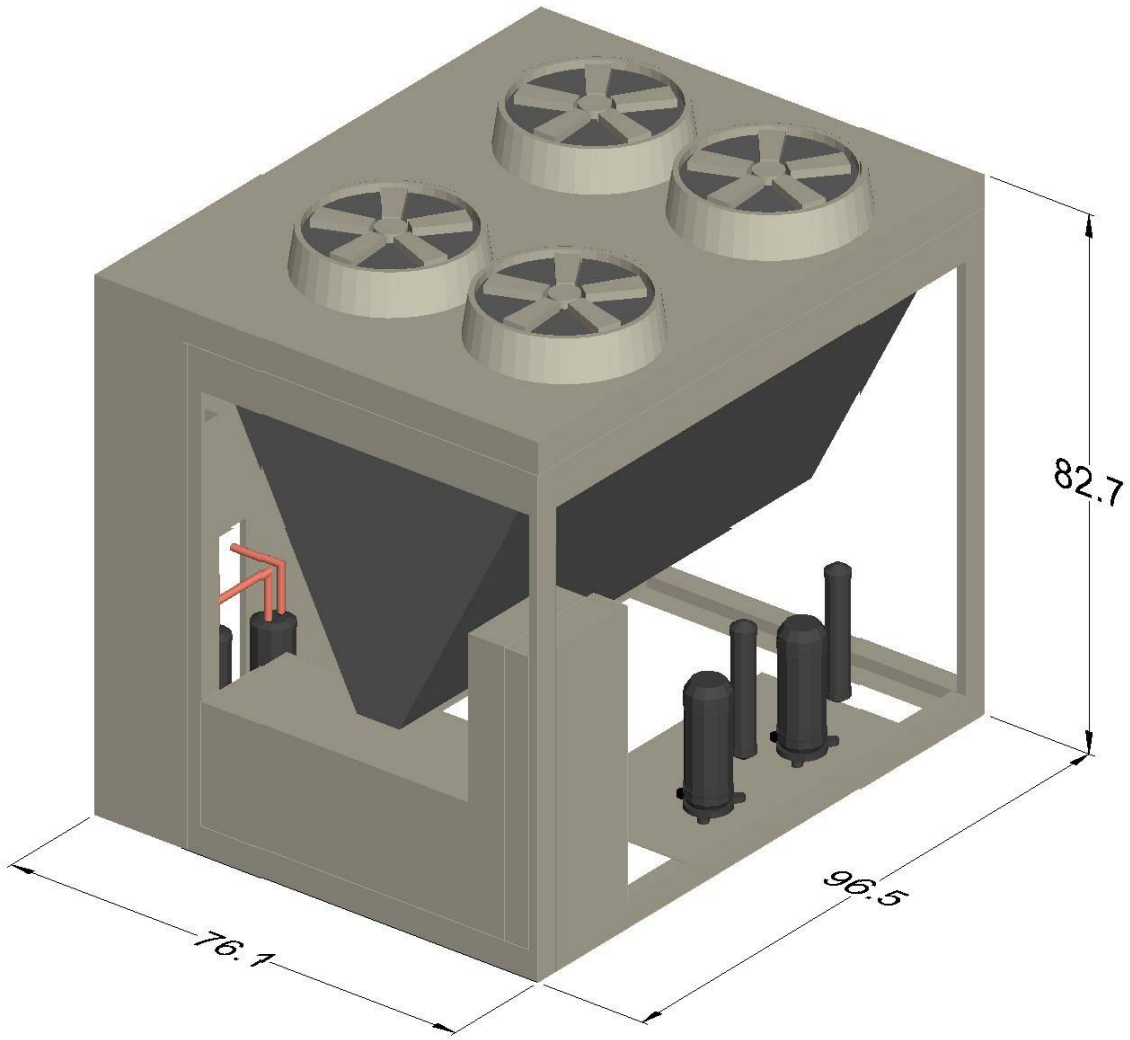

Product Drawing	Unit Tag: CU-PE-1 (Klenk)			Sales Office: HTS Texas			DAIKIN
Product:	Project Name: Klein ISD Klenk ES AHU			Sales Engineer:			13600 Industrial Park Blvd. Minneapolis, MN 55441
Model: DCSA030	Jan. 16, 2026	Ver/Rev:	Sheet: 1 of 1	Scale: NTS	Tolerance: +/- 0.25"	Dwg Units: in [mm]	www.DaikinApplied.com Software Version: 11.40

No change to this drawing may be made unless approved in writing by Daikin Applied. Purchaser must determine that the equipment is fit and sufficient for the job specifications.

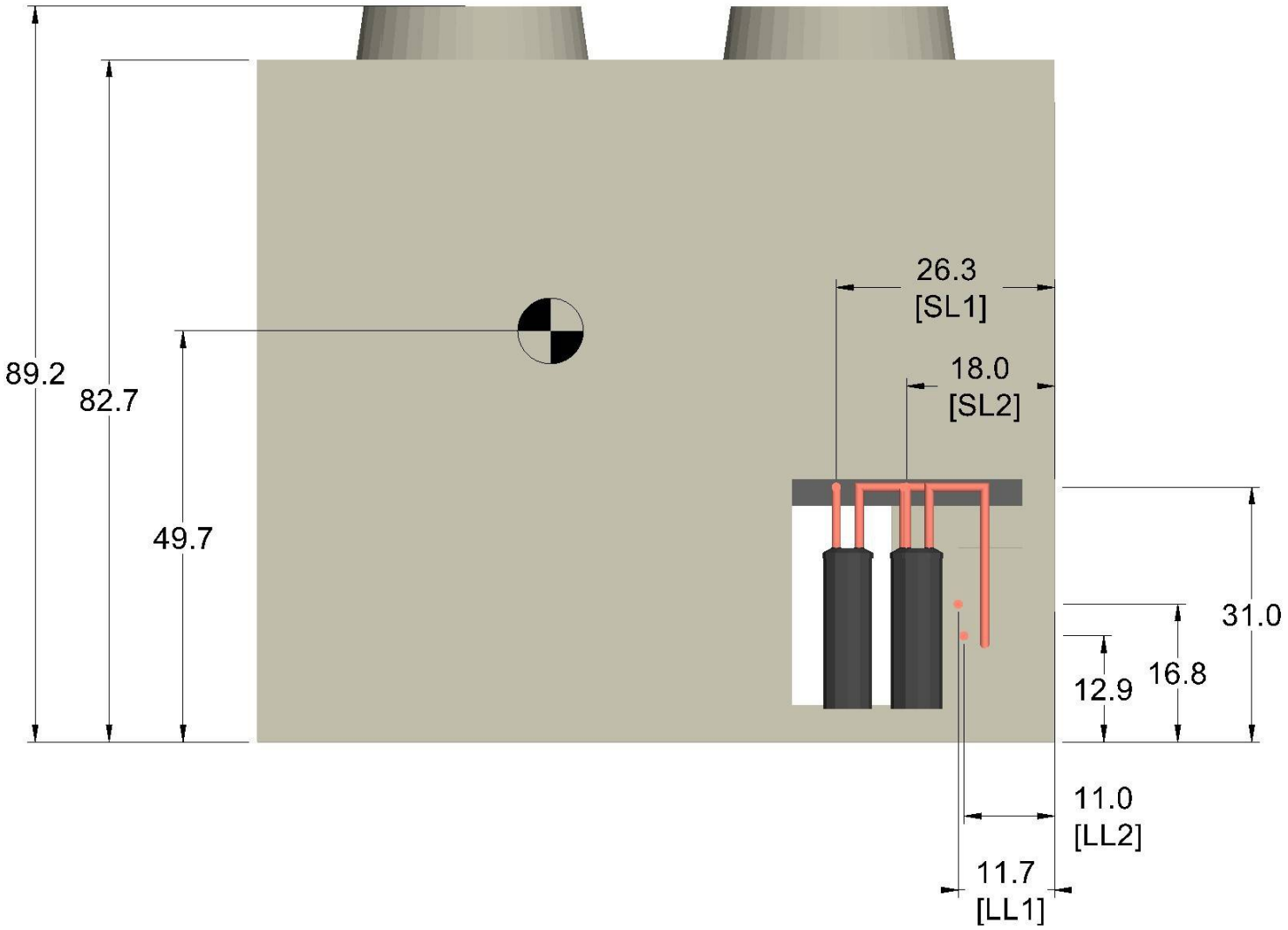

Product Drawing	Unit Tag: CU-PE-1 (Klenk)			Sales Office: HTS Texas			
Product:	Project Name: Klein ISD Klenk ES AHU			Sales Engineer:			
Model: DCSA030	Jan. 16, 2026	Ver/Rev:	Sheet: 1 of 1	Scale: NTS	Tolerance: +/- 0.25"	Dwg Units: in [mm]	

DAIKIN
13600 Industrial Park Blvd. Minneapolis, MN 55441
www.DaikinApplied.com Software Version: 11.40

No change to this drawing may be made unless approved in writing by Daikin Applied. Purchaser must determine that the equipment is fit and sufficient for the job specifications.

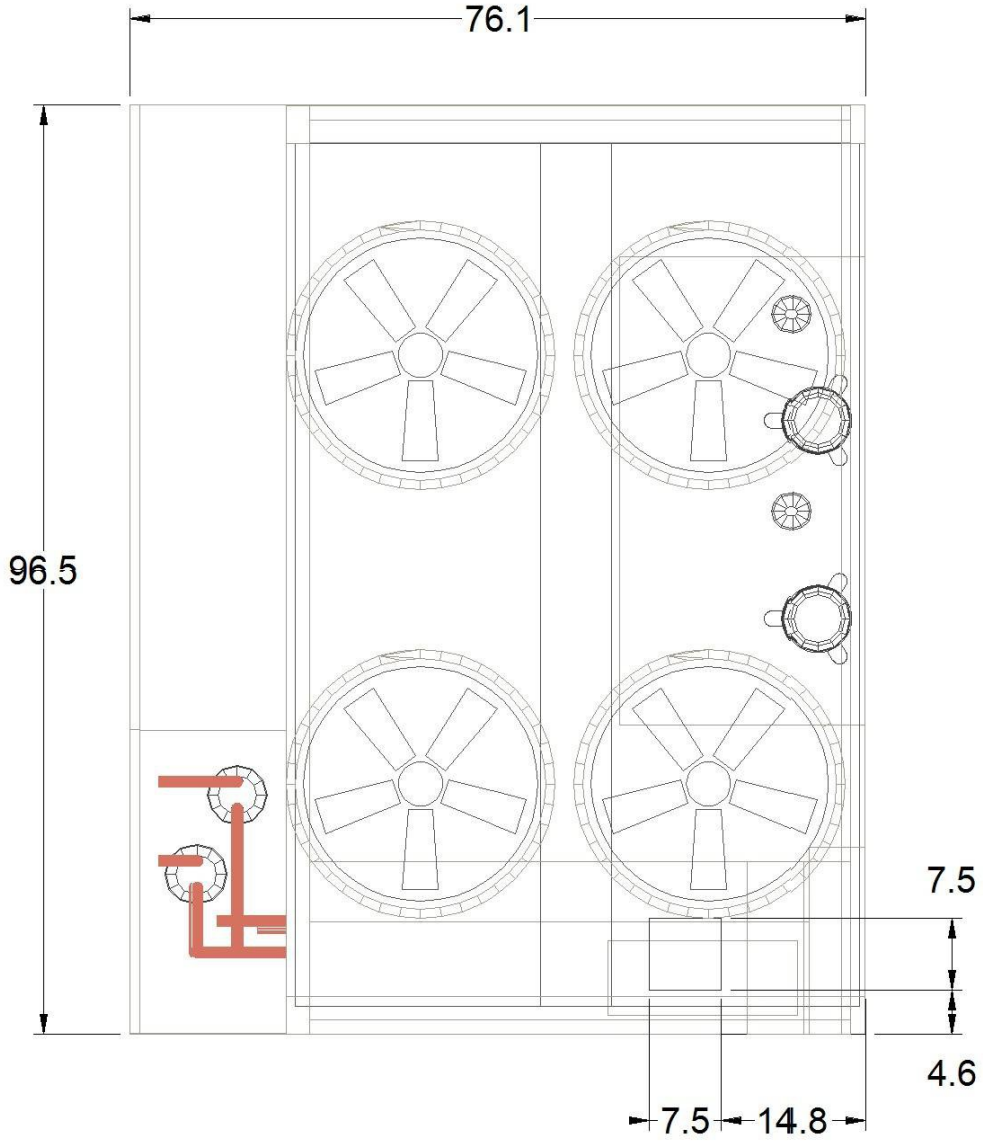

Product Drawing	Unit Tag: CU-PE-1 (Klenk)			Sales Office: HTS Texas			DAIKIN
Product:	Project Name: Klein ISD Klenk ES AHU			Sales Engineer:			13600 Industrial Park Blvd. Minneapolis, MN 55441
Model: DCSA030	Jan. 16, 2026	Ver/Rev:	Sheet: 1 of 1	Scale: NTS	Tolerance: +/- 0.25"	Dwg Units: in [mm]	www.DaikinApplied.com Software Version: 11.40

No change to this drawing may be made unless approved in writing by Daikin Applied. Purchaser must determine that the equipment is fit and sufficient for the job specifications.

CW S4= 587 lbs

CW S3= 818 lbs

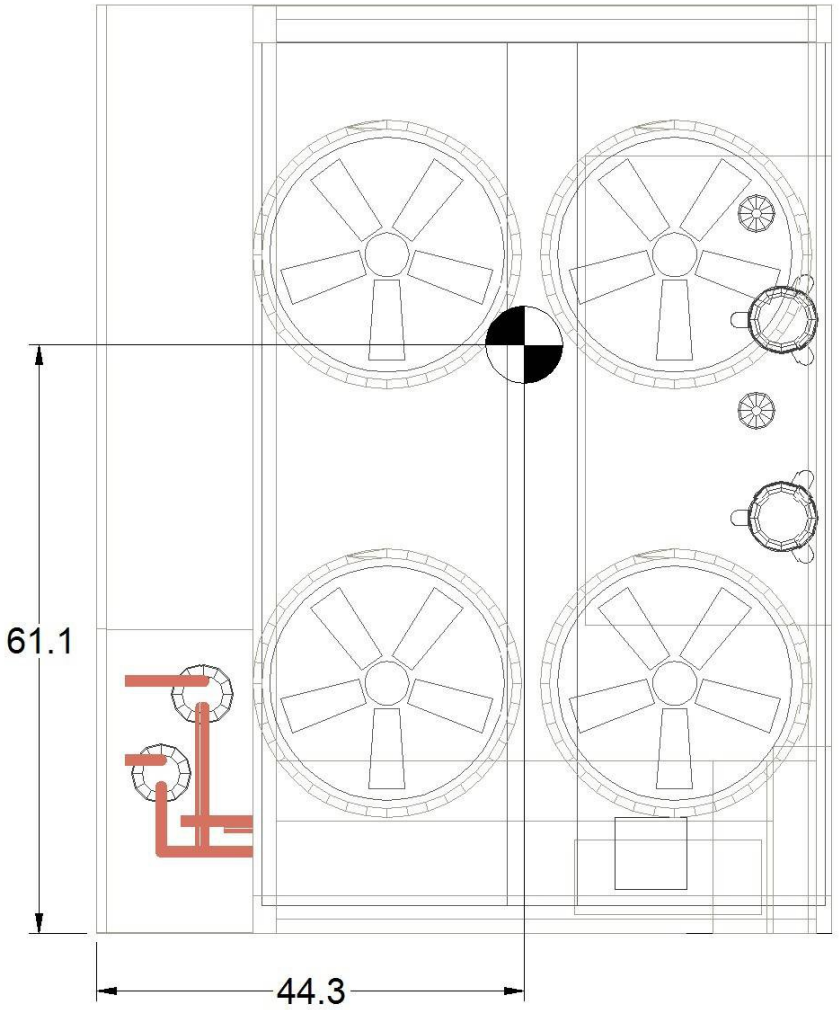

CW S1= 770 lbs

CW S2= 553 lbs

Product Drawing	Unit Tag: CU-PE-1 (Klenk)			Sales Office: HTS Texas			
Product:	Project Name: Klein ISD Klenk ES AHU			Sales Engineer:			
Model: DCSA030	Jan. 16, 2026	Ver/Rev:	Sheet: 1 of 1	Scale: NTS	Tolerance: +/- 0.25"	Dwg Units: in [mm]	

DAIKIN
13600 Industrial Park Blvd. Minneapolis, MN 55441
www.DaikinApplied.com Software Version: 11.40

No change to this drawing may be made unless approved in writing by Daikin Applied. Purchaser must determine that the equipment is fit and sufficient for the job specifications.

HTS Texas
3350 Yale Street
Houston, Texas 77018
P 832.328.1010
F 832.328.1460

SUBMITTAL DATA
APPROVAL REQUIRED

PROJECT	:	Klein ISD Nitsch 2025 FRP
HTS JOB NUMBER	:	22513311 - MECH
SOLD TO	:	TBD
MECHANICAL CONSULTANT	:	Salas O'Brien
SHIPPING ADDRESS	:	TBD
HTS SALESPERSON	:	Matt McPherson
DATE	:	01/16/2026
REVISION NUMBER	:	00
SPECIFICATION SECTION	:	23 63 00
STANDARD LEAD TIME	:	

TAG	QTY	DESCRIPTION	MODEL	MANUFACTURER
CU-PE-1	1	Air Cooled Condensing Unit	DCSA	Daikin Applied

APPROVAL STAMPS



SUBMITTAL DATA

Job Name	Klein ISD Nitsch ES AHU replacements
For	
Sold To	
Prepared For	
Customer PO#	
Prepared By	Erick Beltran
Date	1/16/2026

Table of Contents

Daikin Section Divider 3

Technical Data Sheet - CU-PE-1 (Nitsch) 4

Drawings(1) - CU-PE-1 (Nitsch) 7

Drawings(2) - CU-PE-1 (Nitsch) 8

Drawings(3) - CU-PE-1 (Nitsch) 9

Drawings(4) - CU-PE-1 (Nitsch) 10


DAIKIN

Job Information	Technical Data Sheet
Job Name	Klein ISD Nitsch ES AHU replacements
Date	1/16/2026
Submitted By	Erick Beltran
Software Version	11.40
Unit Tag	CU-PE-1 (Nitsch)



Unit Overview

Model Number	Voltage V/Hz/Phase	Total Refrigeration Effect Btu/hr	AHRI Conditions		ASHRAE 90.1	Altitude
			EER	IEER		
DCSA030	460/60/3	321882.0	12.0	16.9	2022 Compliant	0

Physical

Dimensions and Weight

Length	Height	Width	Operating Weight
76.1 in	82.7 in	96.5 in	2621 lb

DCSA Connections

Connection	Connection Sizes	
CIRCUITS	Circuit 1	Circuit 2
Suction Line Circuit	1.125 in	1.125 in
Liquid Line Circuit	0.875 in	0.875 in
Hot Gas Reheat Circuit	N/A	N/A

Unit Construction and Performance

Construction:	Exterior:	Pre-painted Steel 3000 hr Salt Spray ASTM B-117

Rigging Information

Lugs per side	2 Lugs per Side

Electrical

Voltage	MCA	MROPD	SCCR
460/60/3 V/Hz/Phase	64.5 A	80 A	10 kAIC

Note:	Use only copper supply wires with ampacity based on 75° C conductor rating. Connections to terminals must be made with copper lugs and copper wire.

DX Cooling

Cooling Performance

Capacity	Refrigerant Type	Ambient Air Temperature		Suction Temperature °F
Total Btu/hr		Dry Bulb °F	Wet Bulb °F	
321882.0	R32	95	75.0	45.0

Unit

Model Number:	DCSA030
Type:	Applied
Approval:	ETL - USA

Condensing Section

Compressor

Type	Quantity	Refrigerant Charge		Total Power	Capacity Control/Min Turndown	Refrigerant Type
		Circuit1	Circuit 2			
Fixed Scroll	2	17.9	19.2	22.7	4 Step with 25% turndown	R32

Compressor Amps:

Compressor 1	Fixed	25.1 A
Compressor 2	Fixed	25.1 A

Condenser Coil

Type	Fins Per Inch	Rows	Fin Material
Aluminum tube micro channel	23	Micro Channel	Aluminum

Low Ambient Control:	Speedtrol - Operation to 25 degrees F

Condenser Fan Motors

Number of Motors	Full Load Current
4	2.0 A
Condenser Control	Speedtrol Modulating Control

AHRI 360 Certified Data at AHRI 360 Standard Conditions

Net Capacity	Efficiency		ASHRAE 90.1
321882.0	12.0 EER	16.9 IEER	2022 Compliant

Sound

Casing Radiated Sound Power (db)

63 Hz	125 Hz	250 Hz	500 Hz	1 kHz	2 kHz	4 kHz	8 kHz
44	78	83	87	88	86	85	82

Options

Unit

Hot Gas Bypass:	None
Condenser Coil Options:	Condenser with built in hail protection

Electrical

Field Connection	Standard Power Block
Wiring Options	Standard
GFI Receptacle	Field powered

Unit Control

Temperature Controls:	No temp control, 115 V transformer
Low Ambient Control:	Speedtrol - Operation to 25 degrees F

Controls

Unit Controls:	Full Refrigeration Only Controls

Warranty

Parts:	5 Year Parts
Compressor:	5 Year Compressor Warranty

AHRI Certification

All equipment is rated and certified in accordance with AHRI 360.

Accessories

Optional

Part Number	Description
910507056	Field installed TXVs for circuit #1 & #2 (qty 2). Danfoss Model TGE10-8
910486378	150' Harness for Refrigerant Leak Detection
910507064	75' Harness for Field installed Liquid Line Solenoid
910507063	Field Installed Liquid Line Solenoid Valves - 1-1/8" (qty 2)

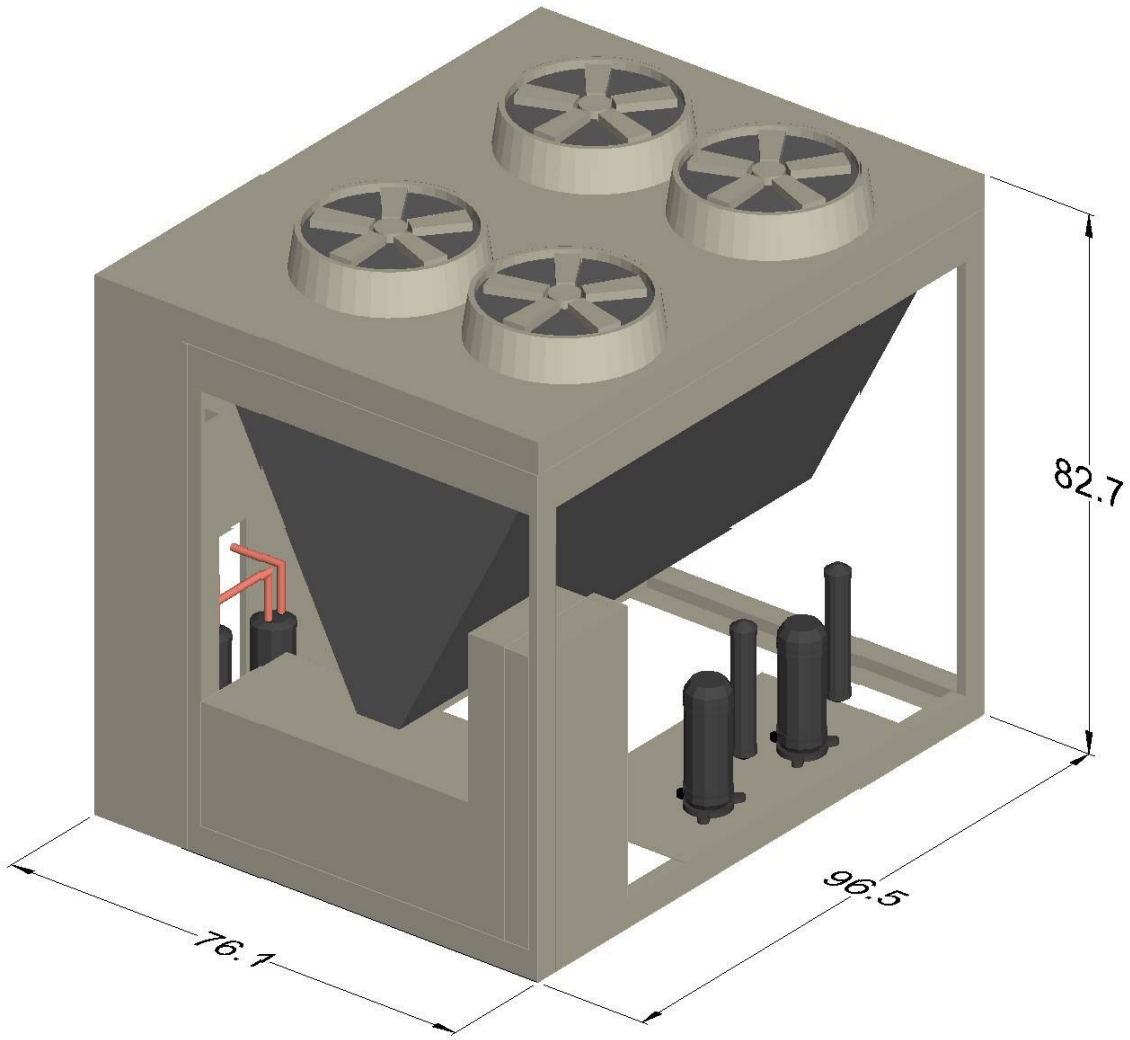

Product Drawing	Unit Tag: CU-PE-1 (Nitsch)			Sales Office: HTS Texas			DAIKIN
Product:	Project Name: Klein ISD Nitsch ES AHU			Sales Engineer:			13600 Industrial Park Blvd. Minneapolis, MN 55441
Model: DCSA030	Jan. 16, 2026	Ver/Rev:	Sheet: 1 of 1	Scale: NTS	Tolerance: +/- 0.25"	Dwg Units: in [mm]	www.DaikinApplied.com Software Version: 11.40

No change to this drawing may be made unless approved in writing by Daikin Applied. Purchaser must determine that the equipment is fit and sufficient for the job specifications.

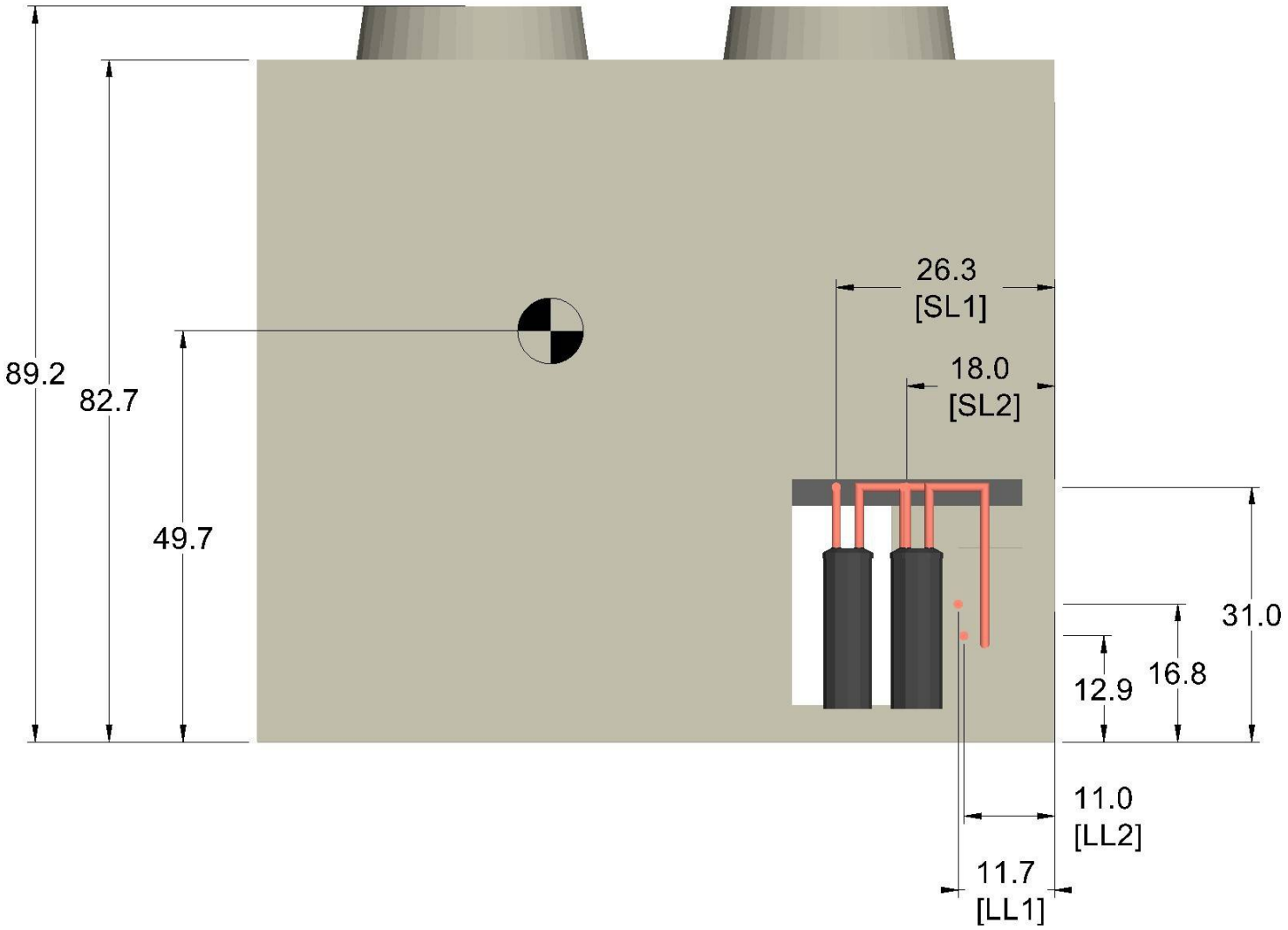

Product Drawing	Unit Tag: CU-PE-1 (Nitsch)			Sales Office: HTS Texas			DAIKIN
Product:	Project Name: Klein ISD Nitsch ES AHU			Sales Engineer:			13600 Industrial Park Blvd. Minneapolis, MN 55441
Model: DCSA030	Jan. 16, 2026	Ver/Rev:	Sheet: 1 of 1	Scale: NTS	Tolerance: +/- 0.25"	Dwg Units: in [mm]	www.DaikinApplied.com Software Version: 11.40

No change to this drawing may be made unless approved in writing by Daikin Applied. Purchaser must determine that the equipment is fit and sufficient for the job specifications.

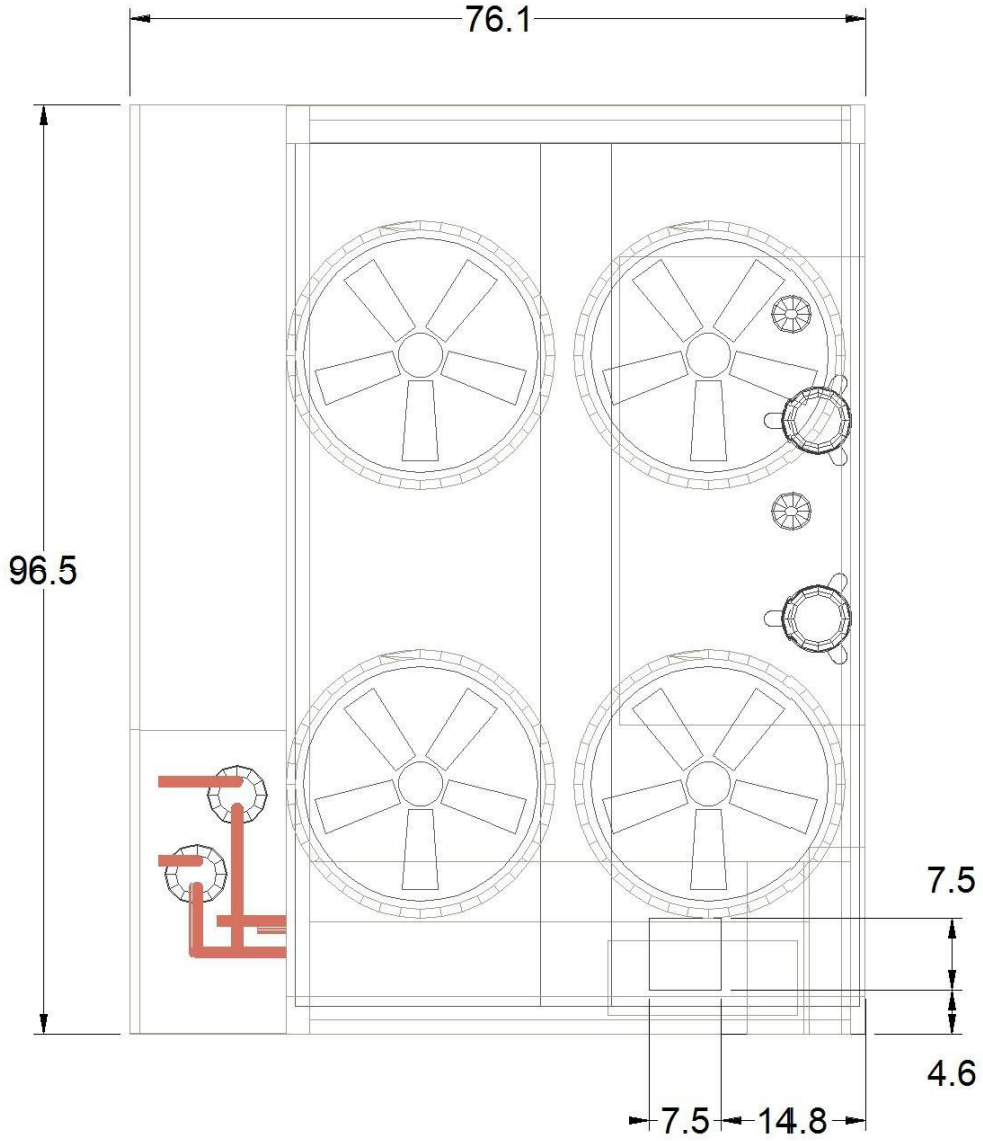

Product Drawing	Unit Tag: CU-PE-1 (Nitsch)			Sales Office: HTS Texas			DAIKIN
Product:	Project Name: Klein ISD Nitsch ES AHU			Sales Engineer:			13600 Industrial Park Blvd. Minneapolis, MN 55441
Model: DCSA030	Jan. 16, 2026	Ver/Rev:	Sheet: 1 of 1	Scale: NTS	Tolerance: +/- 0.25"	Dwg Units: in [mm]	www.DaikinApplied.com Software Version: 11.40

No change to this drawing may be made unless approved in writing by Daikin Applied. Purchaser must determine that the equipment is fit and sufficient for the job specifications.

62R7Z4

Klein ISD Nitsch ES AHU re

10

1/16/2026

CU-PE-1 (Nitsch)

Drawings(4)

CW S4= 587 lbs

CW S3= 818 lbs

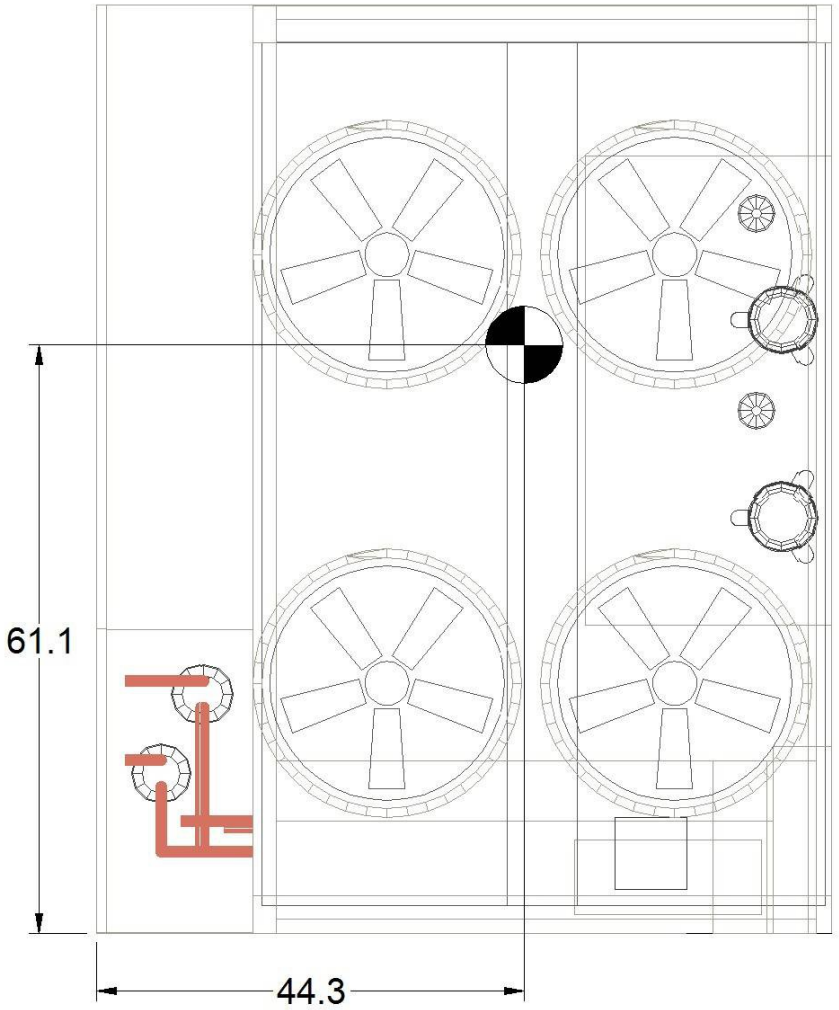

CW S1= 770 lbs

CW S2= 553 lbs

Product Drawing	Unit Tag: CU-PE-1 (Nitsch)			Sales Office: HTS Texas			DAIKIN
Product:	Project Name: Klein ISD Nitsch ES AHU			Sales Engineer:			13600 Industrial Park Blvd. Minneapolis, MN 55441
Model: DCSA030	Jan. 16, 2026	Ver/Rev:	Sheet: 1 of 1	Scale: NTS	Tolerance: +/- 0.25"	Dwg Units: in [mm]	www.DaikinApplied.com Software Version: 11.40

No change to this drawing may be made unless approved in writing by Daikin Applied. Purchaser must determine that the equipment is fit and sufficient for the job specifications.



02-06-2026

SECTION 23 73 13

AIR HANDLING UNITS (PRE-PURCHASED)

PART 1 - GENERAL

1.1 RELATED DOCUMENTS

A. Drawings and general provisions of Contract, including General and Supplementary Conditions and Division 01, apply to this Section.

B. Refer to Document 00 21 13, Instructions to Bidders and 00 22 13 Supplementary Instructions to Bidders, for substitution of materials and products.

C. Addenda issued during the bidding period that affect this section of the specifications.

1.2 WORK INCLUDED

A. The Contractor shall furnish all labor, supervision, coordination, temporary services, accessories, materials, and incidentals required to receive, store, install, connect, integrate, test, and place into full operational service all pre-purchased HVAC equipment.

B. District procurement of HVAC equipment does not relieve the Contractor of responsibility to deliver complete, operational, code-compliant HVAC systems suitable for use in an occupied K-12 educational facility.

1.3 RELATED WORK

A. Division 23 Mechanical
   1. Air Balance
   2. Ductwork
   3. Controls
   4. Electrical Provisions of Mechanical Work
   5. Air Filtration
   6. Heating and Cooling Coils
   7. Other applicable sections

1.4 PRE-PURCHASED EQUIPMENT SUBMITTALS

A. The Owner has provided the reviewed Owner Pre-Purchased Equipment (OPE) submittals for the HVAC equipment included in this Project as included in the Appendix.

B. Provided OPE submittals are issued for reference, coordination, and installation purposes only.

C. The Contractor shall review the provided OPE submittals and shall be responsible for:
   1. Coordinating installation requirements, dimensions, weights, clearances, and utility connections.
   2. Verifying compatibility with field conditions, structural supports, and renovation constraints.
   3. Incorporating OPE requirements into coordination drawings, schedules, and installation planning.

A. Review or distribution of OPE submittals does not:
   1. Transfer design responsibility to the District or Architect.
   2. Relieve the Contractor of responsibility for proper installation.

B. Discrepancies between OPE submittals and Contract Documents shall be reported in writing prior to installation. Failure to notify constitutes acceptance for installation purposes.

1.5 DELIVERY, STORAGE AND HANDLING

A. Inspect for transportation damage and store in a clean, dry location. Protect from weather and

construction traffic.

1.6 ENVIRONMENTAL REQUIREMENTS

A. Do not operate units until ductwork is clean, filters are in place, bearings lubricated, condensate properly tapped, piping connections verified and leak tested, belts aligned and tensioned, all shipping braces have been removed, and fan has been tested under observation.

PART 2 – PRODUCTS (REFER TO EQUIPMENT SUBMITTAL APPENDIX)

PART 3 - EXECUTION

3.1 INSTALLATION

A. Install air handling units according to manufacturer's instructions.

B. Provide additional drive packages as required by the Testing and Balancing firm.

C. Air leaks detectable by sound or touch are to be corrected.

D. Air handling units are to be properly supported to prevent flexing, bending or distorting base rails.

E. All coils are to be cleaned prior to substantial completion if units are used during construction.

F. Clean all air handling units and return to original manufacturer's condition prior to substantial completion. Vacuum clean all debris from inside air handling equipment.

G. Install piping to unit with full size 6 inch long dirt leg with 1/2" valve at bottom for cleaning.

H. Provide for positive gravity drainage of coil condensate. Pipe full size of unit connection.

I. Adjust fan drives as required to obtain scheduled capacities as directed by the Test and Balance Firm to include sheave and belt replacement.

J. Align belts to eliminate wear and vibration of belts.

K. Verify correct drainage of condensate from condensate pan.

L. Verify correct rotation of fan and wiring of motor.

M. Lubricate all greaseable ball bearings with manufacturer’s suggested lubricant.

N. Replace filters as required if units are used during construction.

O. Provide piping installation so that after piping is completed and insulated there is full access to service unit and remove fan housing. Piping to coils shall not block fan section access or cause damage to piping insulation during access.

P. AHU Installation Within Existing Building:
   1. Access and Dimensional Requirements
      a. The largest section of each AHU shall be sized to pass through existing exterior door openings without removal of any factory-installed, tested, and balanced components.
      b. AHU sections must be dimensioned to fit through mezzanine access points without requiring structural modifications to the building.
   2. Manufacturer Scope of Work
      a. Any dismantling and reassembly of AHU components shall be performed solely by the AHU manufacturer.
      b. The manufacturer shall ensure that all reassembled units maintain original factory performance standards, including fan balance and component alignment.
   3. Shipping and Handling

a. AHUs shall be shipped to the project site in preassembled sections sized for site access constraints.
b. Each section shall be clearly labeled and packaged to facilitate efficient handling and installation.

4. Contractor Responsibilities and Inspection Procedures
a. The contractor shall coordinate delivery schedules with the manufacturer to ensure timely access to the site and minimize disruption to other trades.
b. The contractor shall verify that all AHU sections received match the approved submittals and are free from damage prior to installation.
c. The contractor shall provide necessary equipment and labor to move AHU sections into position, following manufacturer guidelines.
d. Upon completion of reassembly by the manufacturer, the contractor shall witness and document final inspection and testing, including verification of airflow balance and mechanical integrity.
e. Any discrepancies or damage observed during handling or installation shall be reported immediately to the manufacturer and project manager for resolution.

3.2 IDENTIFICATION

A. Furnish each unit with a durable, deep etched, .025” thick, factory installed aluminum identification plate, permanently mounted with the following information:
1. Unit identification as indicated on Contract Drawings.
2. Serial Number.
3. Model Number.
4. Capacity (CFM) and static pressure.
5. Motor HP.
6. Unit power supply: Volts / PH / Amps.
7. Supply Fan Type.
8. Coil GPM and pressure drop.
9. Sales Order #.
10. Date unit manufactured.

END OF SECTION

APPENDIX A

OWNER PRE-PURCHASED EQUIPMENT (OPE) SUBMITTALS

HTS Texas
3350 Yale Street
Houston, Texas 77018
P 832.328.1010
F 832.328.1460

SUBMITTAL DATA
APPROVAL REQUIRED

PROJECT	:	Klein ISD Eiland 2025 FRP
HTS JOB NUMBER	:	22513311 - MECH
SOLD TO	:	TBD
MECHANICAL CONSULTANT	:	Salas O'Brien
SHIPPING ADDRESS	:	TBD
HTS SALESPERSON	:	Matt McPherson
DATE	:	01/16/2026
REVISION NUMBER	:	00
SPECIFICATION SECTION	:	23 73 13
STANDARD LEAD TIME	:	

TAG	QTY	DESCRIPTION	MODEL	MANUFACTURER
AHU-PE-1	1	DX Air Handling Unit	Vision	Daikin Applied

APPROVAL STAMPS



SUBMITTAL DATA

Job Name	Klein ISD Eiland ES AHU replacements
For	
Sold To	
Prepared For	
Customer PO#	
Prepared By	Matt McPherson
Date	1/16/2026

Table of Contents

Daikin Section Divider 3

Technical Data Sheet - AHU-PE-1 (Eiland) 4

Drawing - AHU-PE-1 (Eiland) 9

Fan Curve - AHU-PE-1 (Eiland) 17


DAIKIN

Job Information	Technical Data Sheet
Job Name	Klein ISD Eiland ES AHU replacements
Date	January 16 2026
Submitted By	Salas O'Brien
Software Version	13.82
Unit Tag	AHU-PE-1 (Eiland)

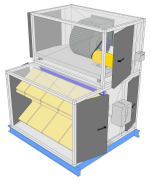

Unit Overview

Model Number	Supply					
	Air Volume cfm	Static Pressure		External Dimensions		
		External inWc	Total inWc	Height in	Width in	Length in
CAH020GDAM	8300	0.75	2.26	52*	78*	74**

**Not including base rails, coil connectors, drain connectors and control boxes.*

***Total lower deck length.*

Unit

Model Number:	CAH020GDAM		
Approval:	ETL Listed / ETL Listed to Canadian Safety Standards (ETL Label / ETLc Label)		
Outer Panel:	18 gauge G90 Galvanized Steel (unpainted)		
Liner:	24 gauge Galvanized Steel (unless noted per section)		
Insulation:	R-13 Injected Foam		
Unit Configuration:	Stacked / vertical	**Drive (Handling) Location:**	Right
Base:	6" formed channel	**Wall Thickness:**	2 in
Altitude:	0 ft	**Parts Warranty:**	Additional One Year, Two Year Total

Panel Filter

Component: 1 | Length: 30 in | Shipping Section: 1

Type	Efficiency	Nominal Face Velocity	Actual Face Velocity	Actual Face Area	Air Volume	Filter Loading
Pre Pleat	MERV 13	231 ft/min	232 ft/min	35.8 ft²	8300 cfm	Side

Air Pressure Drop				Number of Filters	Height	Width	Depth
Clean Air	Mean Air	Dirty Air	User Spec				
0.12 inWc	**0.56** inWc	1.00 inWc	N/A	3	24 in	24 in	2 in
				6	24 in	20 in	2 in
				3	24 in	12 in	2 in

Door

Location	Drive Side Door Width	Opp. Drv. Side Door Width	Opening
Both sides	26 in	26 in	Outward

Direct Expansion Coil	Component: 2	Length: 44 in	Shipping Section: 1

Coil Model	Total Capacity	Sensible Capacity	Number of Coils	Number of Rows	Fins per Inch	Tube Diameter	Tube Spacing (Face x Row)
4EJ1206B014	329633 Btu/hr	235924 Btu/hr	1	6	12	0.500 in	1.50 in x 1.299 in

Coil Operating Weight
575 lb

Air Volume	Air Temperature				Coil Air Pressure Drop	Finned Height	Finned Length	Face Area	Face Velocity
	Entering		Leaving						
	Dry Bulb	Wet Bulb	Dry Bulb	Wet Bulb					
8300 cfm	78.2 °F	65.2 °F	51.6 °F	51.3 °F	0.82 insWg	42.50 in	65.00 in	19.18 ft²	433 ft/min

Fluid		Sub-Cooled Refrigerant Liquid Temp.	Suction Vapor Superheat Temp. at Coil Outlet	Design Saturated Condensing Temp.	Total Refrigerant Weight	Total Coil Volume
Suction Temp.	Refrigerant					
45.0 °F	R32	110.0 °F	8.0 °F	110.0 °F	10.00 lb	1.64 ft³

Connection [Data Per Coil]					Min. Fin Surface Temp.	Min. Tube Wall Surface Temp.
Type	Liquid [Qty - Size]	Suction [Qty - Size]	Location	Material		
OD Sweat	2-0.875 in	2-1.375 in	Drive side	Copper tube	32.0 °F	32.0 °F

Material				Drain Pan	Drain Side
Fin	Tube	Header	Case		
Aluminum .0075 in	Copper .020 in	Copper	Stainless steel	Stainless steel	Drive side

Control Panel			
Location:	Factory Installed	Voltage:	120
Height x Width x Depth:	16.00 in x 12.00 in x 9.00 in	MCA:	2A
Equipment:	Leak Detection	MOP:	10A
Enclosure:	NEMA 3	Wiring Harness:	Factory Wired

Total Refrigerant Weight is the total for all circuits of all coils in this coil section and is estimated. Refer to the AHU and Condensing Unit IOMs for recommendations on system start-up.

Minimum allowable face velocity = 150 fpm

80% liquid to 20% vapor is the assumption used for the charge calculation.

Volume includes coil fin pack and header.

Harness is wired from refrigerant sensor to the refrigerant detection control panel. A separate field connection is required for 120V power.

AHRI 410 Certification
Coil is NOT certified by AHRI

Door			
Location	Drive Side Door Width	Opp. Drv. Side Door Width	Opening
Both sides	18 in	28 in	Outward

Supply Fan

Component: 3 | Length: 46 in | Shipping Section: 2

Fan Performance

Air Volume	Static Pressure			Fan Energy Index(FEI)	Total Input Power	Fan Shaft Power	Fan Wheel Speed		Outlet Velocity
	External	Total	Cabinet				Operating	Maximum	
8300 cfm	0.75 inWc	2.26 inWc	0.13 inWc	1.01	5.2 kW	5.51 BHP	878 rpm	1450 rpm	2872 ft/min

Fan Data

Fan Type	Blade Type / Class	Quantity of Fans	Wheel Diameter	Number of Blades	Discharge	Motor Location
Centrifugal DWDI	Forward Curved / 2	1	18.03 in	N/A	Top horizontal	To Side of Fan

Motor Data

Power	Electrical Supply	Speed	Efficiency	Enclosure	Frame Size	Supplier	Number of Poles	Lock Rotor Current	Full Load Current
10.0 HP	460/60/3 V/Hz/Phase	1750 rpm	Premium	TEFC	215 T frame	Generic	4	106.62 A	12.50 A

Fan Options

Shaft Grounding Kit:	Provided	**Isolator Type:**	Spring

Drive Package Data*

Fan Sheave	Motor Sheave	Belt	Number of Belts	Actual Drive S.F.	Bearing Type
2B5V94	2BK52H	BX46	2	1.32	Standard - L50 (200K)

**Daikin Applied reserves the right to provide a different but equivalent drive package*

VFD/Starter/Disconnect Data

Selection Type:	External J-Box	**Vendor:**	Factory Standard
Voltage:	460 V	**Height x Width x Depth:**	6.00 in x 6.00 in x 4.00 in
Mounting:	Door Side	**Enclosure:**	NEMA 1

Door

Location	Drive Side Door Width	Opp. Drv. Side Door Width	Opening
Both sides	30 in	30 in	Outward

Unit Sound Power (dB)

Type	63 Hz	125 Hz	250 Hz	500 Hz	1000 Hz	2000 Hz	4000 Hz	8000 Hz
Radiated:	73	73	63	62	57	49	46	51
Unit Discharge:	83	83	81	83	79	77	74	69
Unit Return:	78	77	74	76	71	69	64	57

Shipping Section Details

Section	Length in	Weight lb	Corner Weights (lb)				Center of Gravity (in)		
			P1	P2	P3	P4	XX	YY	ZZ
1	74	1646	405	383	418	441	39	38	28
2	46	1056	324	229	204	299	22	32	22
Entire Unit	**74** *Lower level only*	**2702**	**n/a**	**n/a**	**n/a**	**n/a**	**n/a**	**n/a**	**n/a**

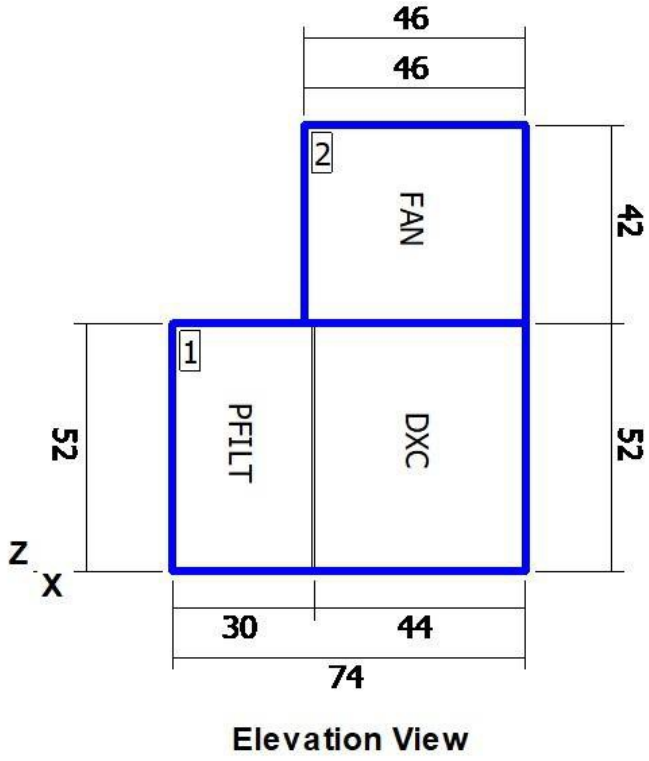

Elevation View

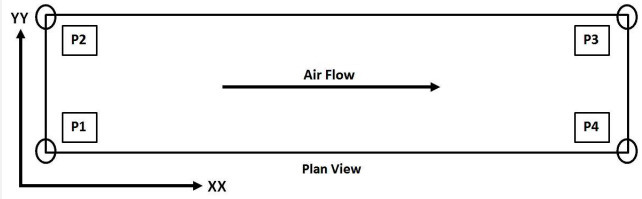

NOTE: Special components aren't included in the corner weights and center of gravity data.

Shipping Protection	None

Supply Static Pressure Drop

Component	Option	Static Pressure Drop
Panel Filter	Panel Filter	0.56 insWg
DX Coil	DX Coil	0.82 insWg
Supply Fan	Cabinet	0.13 insWg
External Static	External Static	0.75 insWg
Total Supply Fan Static		2.26 insWg

Minimum Recommended Drain Pan Trap Dimensions

Shipping Section	Component	H
1	DX Coil	3.26

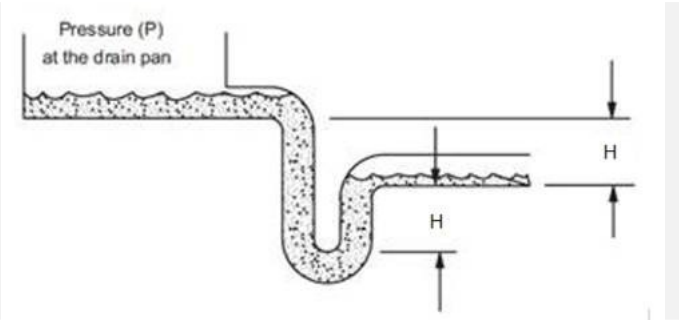

Dimensions provided as a courtesy and are recommended minimums only. Daikin is not responsible for supplying or designing drain pan traps and is not responsible for any damage caused by incorrect trap heights. The dimensions listed above should be reviewed and approved by a licensed plumbing professional.

AHRI Certification

Certified by the AHRI Central Station Air-Handling Unit (AHU) Certification Program, which is based on AHRI Standard 430/431. AHRI certified units are subject to rigorous and continuous testing, have performance ratings independently measured and are third-party verified. Certified units may be found in the AHRI Directory at www.ahridirectory.org.

Notes

Standard
1. As a standalone component, unit meets or exceeds requirements of ASHRAE 90.1 - 2007. The approving authority is responsible for compliance of multi - component building systems.

BQZQ3P

Klein ISD Eiland ES AHU re

9

1/16/2026

AHU-PE-1 (Eiland)

Drawing

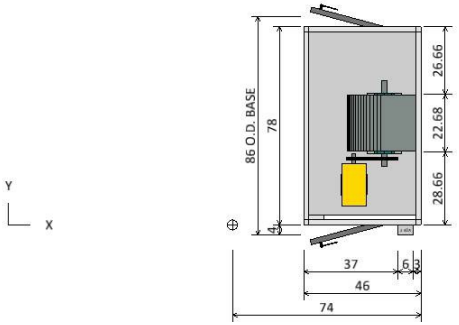

TOP DECK PLAN VIEW

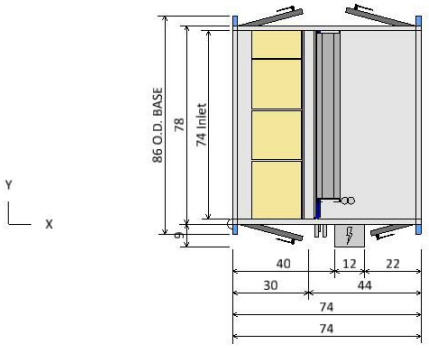

BOTTOM DECK PLAN VIEW

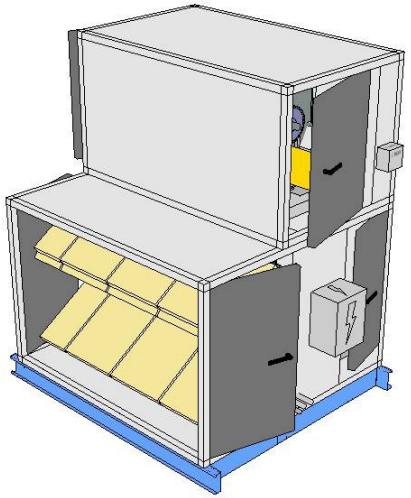

ISOMETRIC VIEW

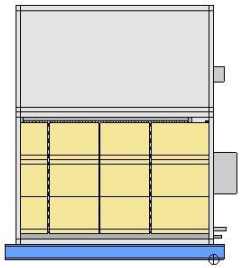

FRONT END VIEW

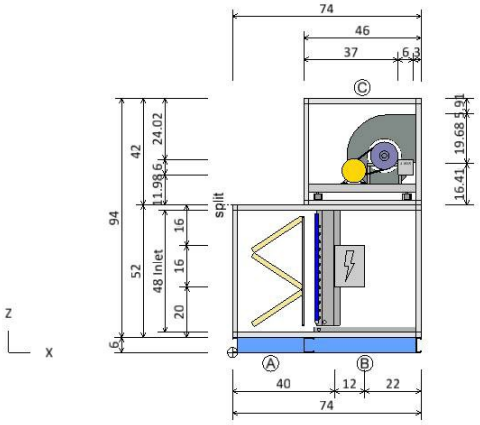

ELEVATION VIEW

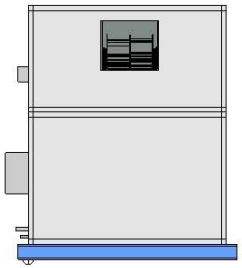

REAR END VIEW

Product Drawing	Unit Tag: AHU-PE-1 (Eiland)			Sales Office: HTS Texas		
Product: Vision Air Handler	Project Name: Klein ISD Eiland ES AHU replacements			Sales Engineer:		
Model: CAH020GDAM	Jan. 16, 2026	Ver/Rev:	Sheet: 1 of 1	Scale: NTS	Tolerance: +/-0.25"	Dwg Units: in

DAIKIN
13600 Industrial Park Blvd, Minneapolis, MN 55441
www.DaikinApplied.com Software Version: 13.82

All opening dimensions have a 1" mounting flange along the inner edge. The actual airflow area of the opening is 2" smaller in each dimension.

BQZQ3P

Klein ISD Eiland ES AHU re

10

1/16/2026

AHU-PE-1 (Eiland)

Drawing

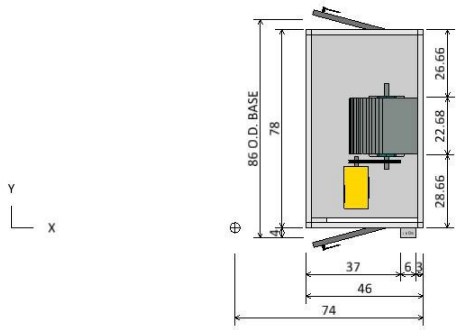

TOP DECK PLAN VIEW

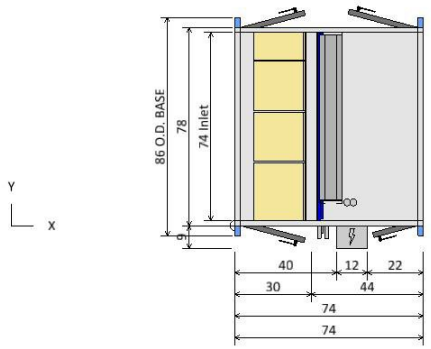

BOTTOM DECK PLAN VIEW

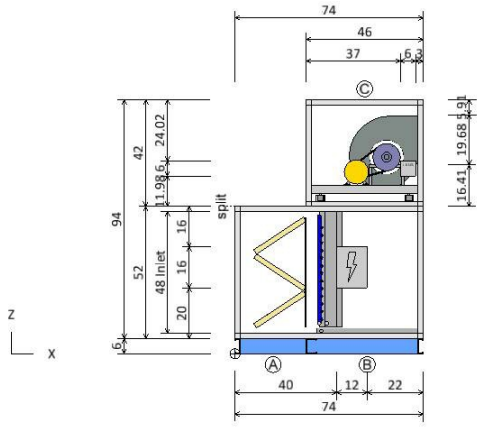

ELEVATION VIEW

Component Key		
Ⓐ	Panel Filter	
	Filter Type:	PrePleat (MERV 13)
	Right Door (WxH):	26 ins x 48 ins
	Left Door (WxH):	26 ins x 48 ins
Ⓑ	DX Coil	
	Coil Model:	4EJ1206B014
	Total Capacity:	329633.0 Btu/hr
	Right Door (WxH):	18 ins x 42 ins
	Left Door (WxH):	28 ins x 42 ins
Ⓒ	Supply Fan	
	Fan Type:	Centrifugal DWDI
	Fan Size (Class):	18 (2)
	Air Flowrate:	8300.0 cfm
	T.S.P:	2.3 insWg
	Motor Power:	10.0 HP
	Right Door (WxH):	30 ins x 38 ins
	Left Door (WxH):	30 ins x 38 ins

Product Drawing	Unit Tag: AHU-PE-1 (Eiland)			Sales Office: HTS Texas		
Product: Vision Air Handler	Project Name: Klein ISD Eiland ES AHU replacements			Sales Engineer:		
Model: CAH020GDAM	Jan. 16, 2026	Ver/Rev:	Sheet: 1 of 1	Scale: NTS	Tolerance: +/-0.25"	Dwg Units: in

DAIKIN
13600 Industrial Park Blvd, Minneapolis, MN 55441
www.DaikinApplied.com Software Version: 13.82

All opening dimensions have a 1" mounting flange along the inner edge. The actual airflow area of the opening is 2" smaller in each dimension.

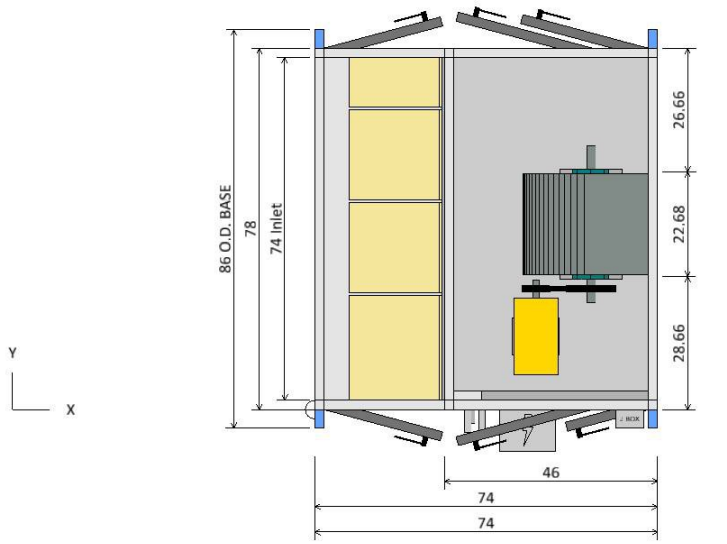

PLAN VIEW

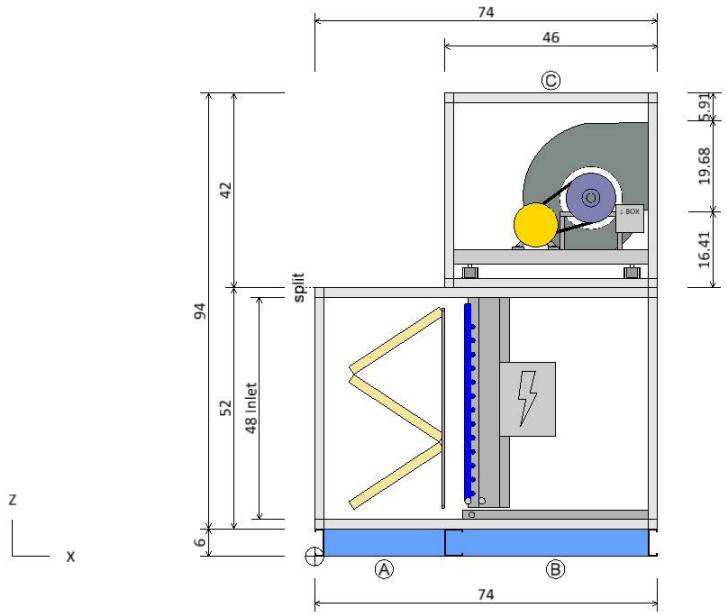

ELEVATION VIEW

Component Key

	Type	X	Y	Z	Wid	Hgt
Ⓐ	Panel Filter Opening	0.00	2.00	8.00	74.00	48.00
Ⓒ	Supply Fan Fan Discharge	74.00	34.66	74.41	22.68	19.68

Note: Dimensions are measured from the origin point.
Note: Openings with or without dampers are recessed into the unit by approximately 1.75 in.

Opening/Damper Connections	Unit Tag: AHU-PE-1 (Eiland)			Sales Office: HTS Texas		
Product: Vision Air Handler	Project Name: Klein ISD Eiland ES AHU replacements			Sales Engineer:		
Model: CAH020GDAM	Jan. 16, 2026	Ver/Rev:	Sheet: 1 of 1	Scale: NTS	Tolerance: +/-0.25"	Dwg Units: in

DAIKIN
13600 Industrial Park Blvd, Minneapolis, MN 55441
www.DaikinApplied.com Software Version: 13.82

All opening dimensions have a 1" mounting flange along the inner edge. The actual airflow area of the opening is 2" smaller in each dimension.

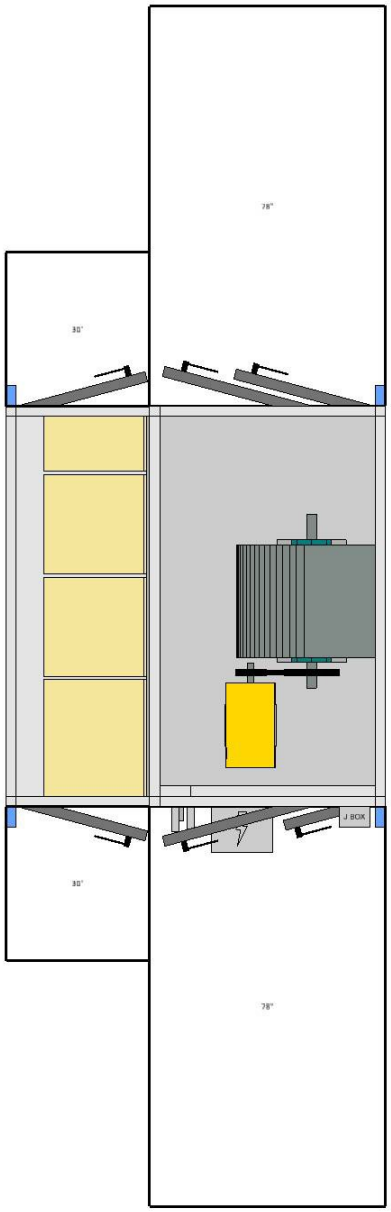

PLAN VIEW

Notes
Check local electrical component service clearance codes for specific distances. Access is only required on one side of the unit.

Service Clearance View	Unit Tag: AHU-PE-1 (Eiland)			Sales Office: HTS Texas		
Product: Vision Air Handler	Project Name: Klein ISD Eiland ES AHU replacements			Sales Engineer:		
Model: CAH020GDAM	Jan. 16, 2026	Ver/Rev:	Sheet: 1 of 1	Scale: NTS	Tolerance: +/-0.25"	Dwg Units: in

DAIKIN
13600 Industrial Park Blvd, Minneapolis, MN 55441
www.DaikinApplied.com Software Version: 13.82

All opening dimensions have a 1" mounting flange along the inner edge. The actual airflow area of the opening is 2" smaller in each dimension.

BQZQ3P

Klein ISD Eiland ES AHU re

13

1/16/2026

AHU-PE-1 (Eiland)

Drawing

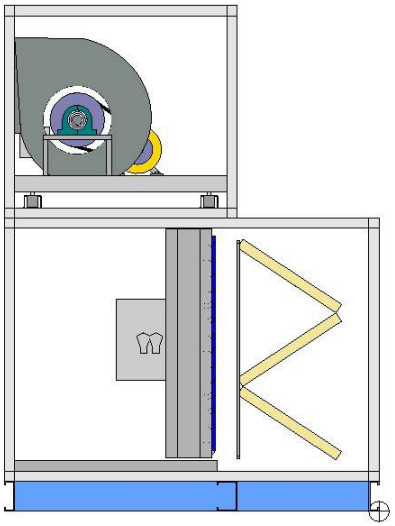

LEFT ELEVATION VIEW

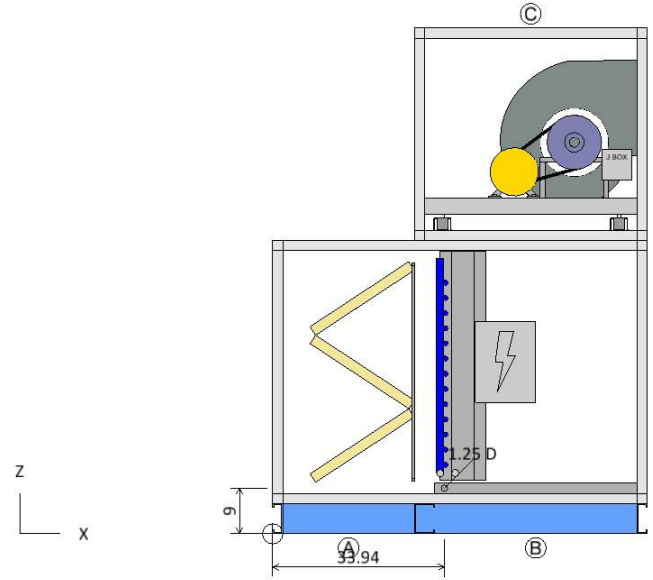

RIGHT ELEVATION VIEW

Coil and Drain Connections

	Type	X	Y	Z	Diam
Ⓑ	DX Coil Condensate drain conn:	33.94	-2.90	9.00	1.25
Ⓑ	DX suction:	TBD	TBD	TBD	2- 1.38
Ⓑ	DX liquid conn:	TBD	TBD	TBD	2- 1.38
Ⓑ	DX liquid conn:	TBD	TBD	TBD	2- 0.88

Note: Dimensions are measured from the origin point.

Coil and Drain Connections	Unit Tag: AHU-PE-1 (Eiland)			Sales Office: HTS Texas		
Product: Vision Air Handler	Project Name: Klein ISD Eiland ES AHU replacements			Sales Engineer:		
Model: CAH020GDAM	Jan. 16, 2026	Ver/Rev:	Sheet: 1 of 1	Scale: NTS	Tolerance: +/-0.25"	Dwg Units: in

DAIKIN
13600 Industrial Park Blvd, Minneapolis, MN 55441
www.DaikinApplied.com Software Version: 13.82

All opening dimensions have a 1" mounting flange along the inner edge. The actual airflow area of the opening is 2" smaller in each dimension.

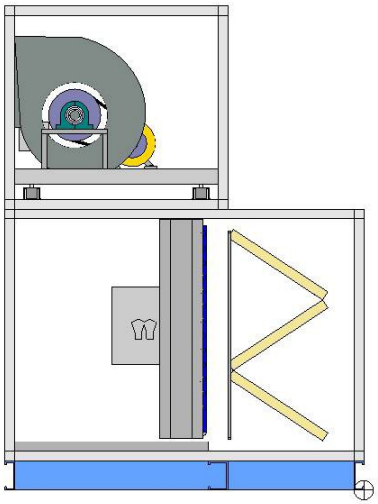

LEFT ELEVATION VIEW

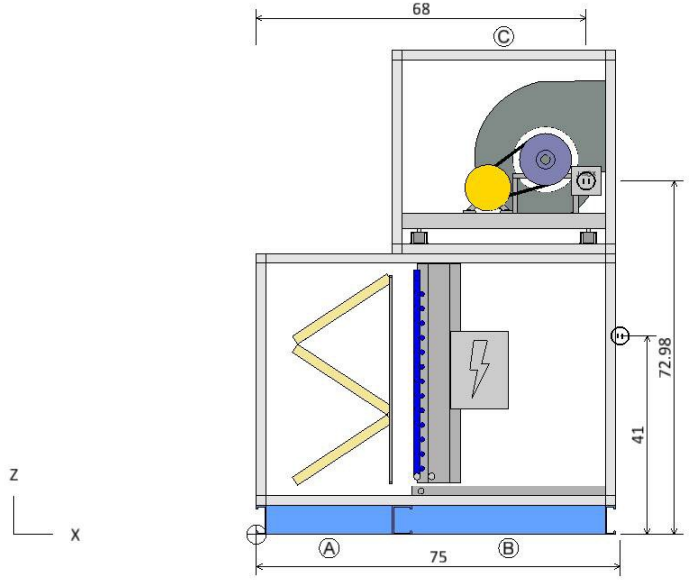

RIGHT ELEVATION VIEW

Component Key

	Type	X	Y	Z	Volts	Phase
Ⓑ	DX Coil DX Control Panel	75.00	0.00	41.00	120	1
Ⓒ	Supply Fan Fan	68.00	0.00	72.98	460	3

Note: Dimensions are measured from the origin point.

Electrical Connections	Unit Tag: AHU-PE-1 (Eiland)			Sales Office: HTS Texas		
Product: Vision Air Handler	Project Name: Klein ISD Eiland ES AHU replacements			Sales Engineer:		
Model: CAH020GDAM	Jan. 16, 2026	Ver/Rev:	Sheet: 1 of 1	Scale: NTS	Tolerance: +/-0.25"	Dwg Units: in

DAIKIN
13600 Industrial Park Blvd, Minneapolis, MN 55441
www.DaikinApplied.com Software Version: 13.82

All opening dimensions have a 1" mounting flange along the inner edge. The actual airflow area of the opening is 2" smaller in each dimension.

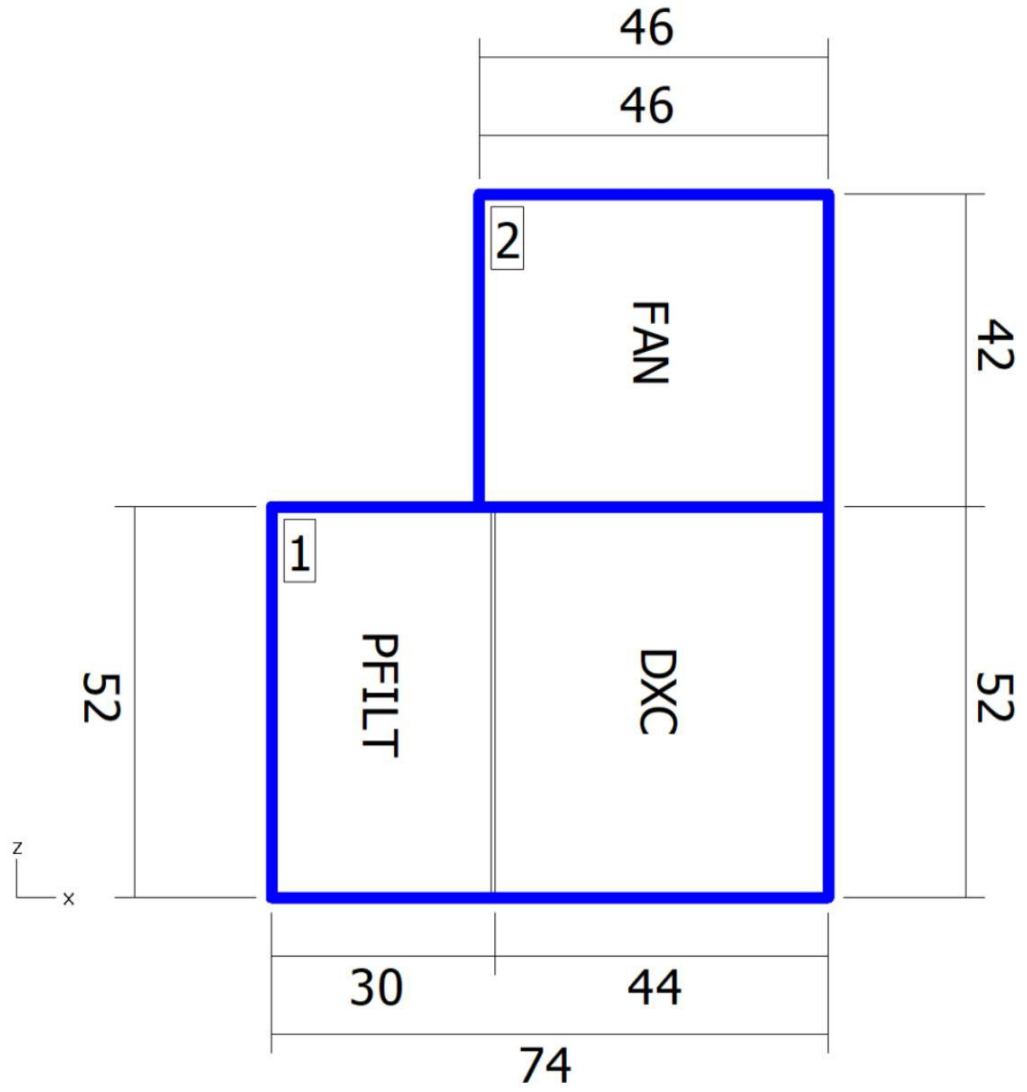

Elevation View

Shipping Sections

Section	Weight (lb)	X	Y	Z
Section 1	1646.48	74	78	52
Section 2	1056.42	46	78	42
Total Unit	2702.90	74	78	94

Note: Base rails, curb ready base, coil connectors, drain connectors, and control boxes not included in height X, Y, Z dimensions. Shipping section may be 2" longer in air flow direction due to internal splice joint.

Shipping Sections	Unit Tag: AHU-PE-1 (Eiland)			Sales Office: HTS Texas		
Product: Vision Air Handler	Project Name: Klein ISD Eiland ES AHU replacements			Sales Engineer:		
Model: CAH020GDAM	Jan. 16, 2026	Ver/Rev:	Sheet: 1 of 1	Scale: NTS	Tolerance: +/-0.25"	Dwg Units: in

DAIKIN
13600 Industrial Park Blvd, Minneapolis, MN 55441
www.DaikinApplied.com Software Version: 13.82

All opening dimensions have a 1" mounting flange along the inner edge. The actual airflow area of the opening is 2" smaller in each dimension.

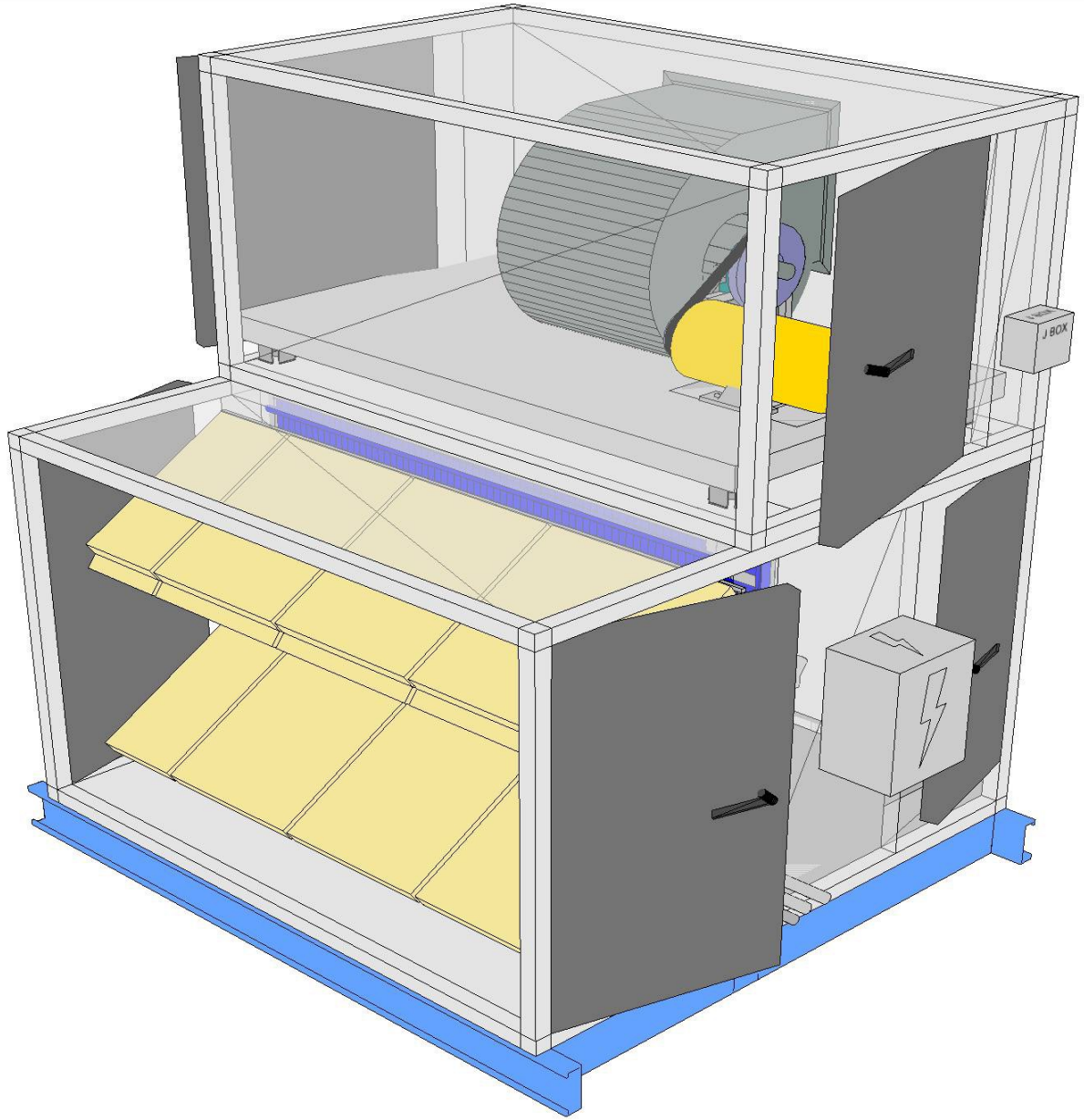

Product Drawing	Unit Tag: AHU-PE-1 (Eiland)			Sales Office: HTS Texas			DAIKIN
Product: Vision Air Handler	Project Name: Klein ISD Eiland ES AHU replacements			Sales Engineer:			13600 Industrial Park Blvd, Minneapolis, MN 55441
Model: CAH020GDAM	Jan. 16, 2026	Ver/Rev:	Sheet: 1 of 1	Scale: NTS	Tolerance: +/-0.25"	Dwg Units: in	www.DaikinApplied.com Software Version: 13.82

All opening dimensions have a 1" mounting flange along the inner edge. The actual airflow area of the opening is 2" smaller in each dimension.

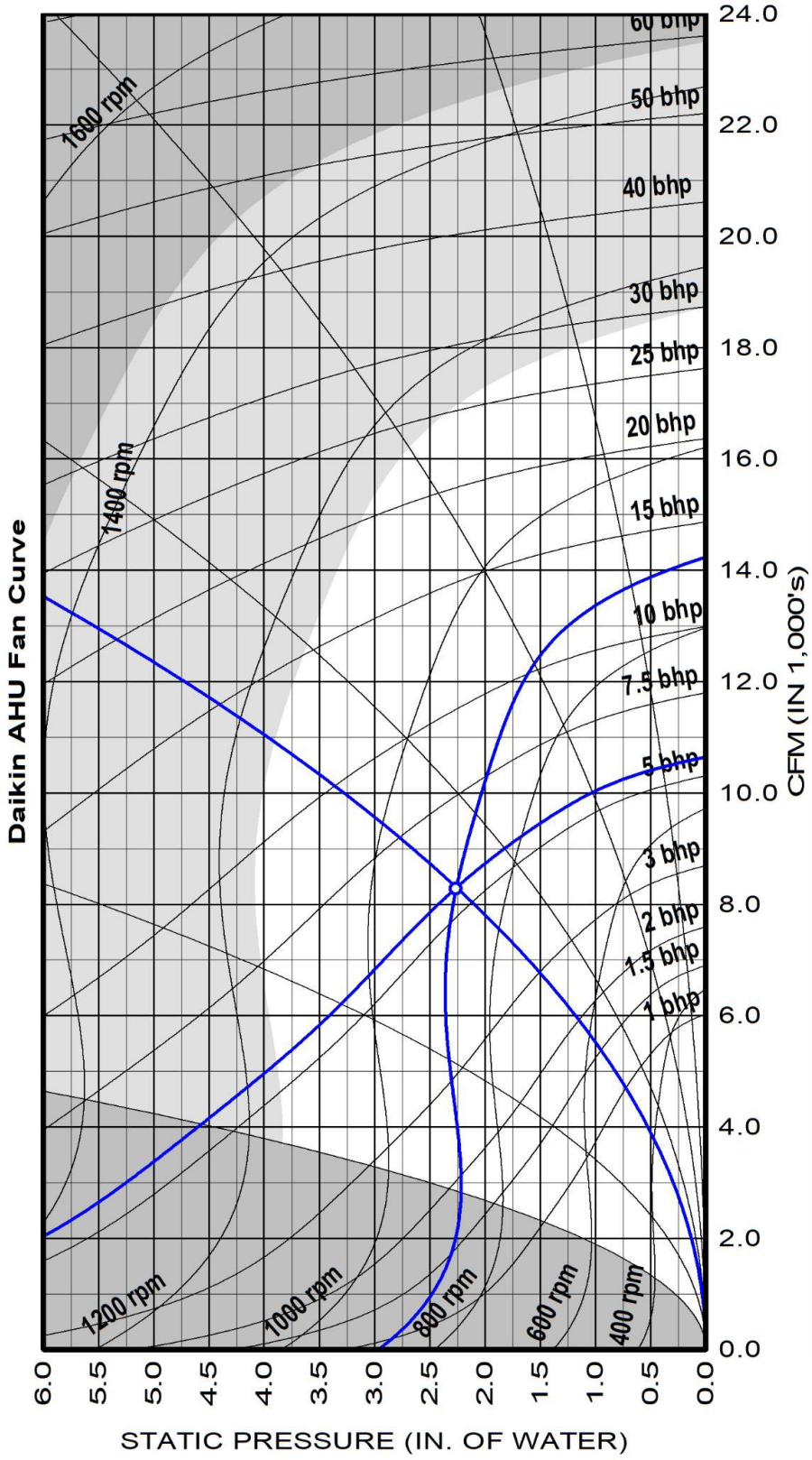

18.03" Forward Curved Supply Fan at Standard Conditions

Air volume	8300	cfm	Fan speed	878	rpm
Total static	2.26	insWg	Max speed	1450	rpm
Fan Shaft Power	5.5	bhp	Efficiency	53.5	%
Fan Energy Index(FEI)	1.01				

Unit tagging AHU-PE-1 (Eiland) Date January-16-2026

Job name Klein ISD Eiland ES AHU replacements Time 16:09

Supply fan performance is certified in accordance with the Central Station Air-Handling Unit Certification Program, which is based on AHRI Standard 430.

HTS Texas
3350 Yale Street
Houston, Texas 77018
P 832.328.1010
F 832.328.1460

SUBMITTAL DATA
APPROVAL REQUIRED

PROJECT	:	Klein ISD Eiland 2025 FRP
HTS JOB NUMBER	:	22513311 - MECH
SOLD TO	:	TBD
MECHANICAL CONSULTANT	:	Salas O'Brien
SHIPPING ADDRESS	:	TBD
HTS SALESPERSON	:	Matt McPherson
DATE	:	01/16/2025
REVISION NUMBER	:	00
SPECIFICATION SECTION	:	23 73 13
STANDARD LEAD TIME	:	

TAG	QTY	DESCRIPTION	MODEL	MANUFACTURER
AHU-LOT	7	Air Handling Units	Vision	Daikin Applied

APPROVAL STAMPS



SUBMITTAL DATA

Job Name	Klein ISD Eiland ES AHU replacements
For	
Sold To	
Prepared For	
Customer PO#	
Prepared By	Matt McPherson
Date	1/16/2026

Table of Contents

Daikin Section Divider 3

Technical Data Sheet - AHU-1 (Eiland) Final 4

Drawing - AHU-1 (Eiland) Final 9

Fan Curve - AHU-1 (Eiland) Final 17

Technical Data Sheet - AHU-2 (Eiland) Final 18

Drawing - AHU-2 (Eiland) Final 23

Fan Curve - AHU-2 (Eiland) Final 31

Technical Data Sheet - AHU-3 (Eiland) Final 32

Drawing - AHU-3 (Eiland) Final 37

Fan Curve - AHU-3 (Eiland) Final 45

Technical Data Sheet - AHU-8 (Eiland) Final 46

Drawing - AHU-8 (Eiland) Final 51

Fan Curve - AHU-8 (Eiland) Final 59

Technical Data Sheet - AHU-9 (Eiland) 60

Drawing - AHU-9 (Eiland) 65

Fan Curve - AHU-9 (Eiland) 73

Technical Data Sheet - AHU-26 (Eiland) Final 74

Drawing - AHU-26 (Eiland) Final 79

Fan Curve - AHU-26 (Eiland) Final 87

Technical Data Sheet - AHU-27 (Eiland) Final 88

Drawing - AHU-27 (Eiland) Final 93

Fan Curve - AHU-27 (Eiland) Final 101


DAIKIN

Job Information	Technical Data Sheet
Job Name	Klein ISD Eiland ES AHU replacements
Date	January 16 2026
Submitted By	Salas O'Brien
Software Version	13.91
Unit Tag	AHU-1 (Eiland) Final

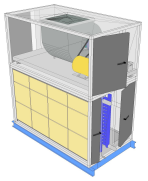

Unit Overview

Model Number	Supply					
	Air Volume cfm	Static Pressure		External Dimensions		
		External inWc	Total inWc	Height in	Width in	Length in
CAH031GDAM	14400	1.50	3.20	60*	100*	56**

**Not including base rails, coil connectors, drain connectors and control boxes.*

***Total lower deck length.*

Unit

Model Number:	CAH031GDAM		
Approval:	ETL Listed / ETL Listed to Canadian Safety Standards (ETL Label / ETLc Label)		
Outer Panel:	18 gauge G90 Galvanized Steel (unpainted)		
Liner:	24 gauge Galvanized Steel (unless noted per section)		
Insulation:	R-13 Injected Foam		
Unit Configuration:	Stacked / vertical	**Drive (Handling) Location:**	Right
Base:	6" formed channel	**Wall Thickness:**	2 in
Altitude:	0 ft	**Parts Warranty:**	Additional One Year, Two Year Total

Panel Filter

Component: 1 | Length: 12 in | Shipping Section: 1

Type	Efficiency	Nominal Face Velocity	Actual Face Velocity	Actual Face Area	Air Volume	Filter Loading
Pre Pleat	MERV 13	415 ft/min	442 ft/min	32.5 ft²	14400 cfm	Side

Air Pressure Drop				Number of Filters	Height	Width	Depth
Clean Air	Mean Air	Dirty Air	User Spec				
0.30 inWc	**0.65** inWc	1.00 inWc	N/A	8	20 in	24 in	2 in
				4	12 in	24 in	2 in

Door

Location	Drive Side Door Width	Opp. Drv. Side Door Width	Opening
Both sides	8 in	8 in	Outward

Chilled Water Coil	Component: 2	Length: 44 in	Shipping Section: 1

Coil Model	Total Capacity	Sensible Capacity	Number of Coils	Number of Rows	Fins per Inch	Tube Diameter	Tube Spacing (Face x Row)
5WS0908B	587125 Btu/hr	377548 Btu/hr	1	8	9	0.625 in	1.50 in x 1.299 in

Coil Operating Weight	Coil Dry Weight
940 lb	687 lb

Air Volume	Air Temperature				Coil Air Pressure Drop	Finned Height	Finned Length	Face Area	Face Velocity
	Entering		Leaving						
	Dry Bulb	Wet Bulb	Dry Bulb	Wet Bulb					
14400 cfm	78.0 °F	67.0 °F	54.0 °F	53.8 °F	0.92 inWc	48 in	87 in	29.00 ft²	497 ft/min

Water

Entering	Leaving	Flow Rate	Pressure Drop	Velocity	Fluid Volume	Fluid Weight
45.0 °F	57.9 °F	91.00 gpm	8.80 ftHd	3.10 ft/s	30.0 gal	253.00 lb

Connection [Data Per Coil]				Min. Fin Surface Temp.	Min. Tube Wall Surface Temp.	Fouling Factor
Type	Size	Location	Material			
Threaded	3.00 in	Drive side	Carbon steel	45.0 °F	45.0 °F	0.000

Material				Drain Pan	Drain Side
Fin	Tube	Header	Case		
Aluminum .0075 in	Copper .020 in	Copper	Stainless steel	Stainless steel	Drive side

AHRI 410 Certification

Certified in accordance with the AHRI Forced-Circulation Air-Cooling and Air-Heating Coils Certification Program which is based on AHRI Standard 410 within the Range of Standard Rating Conditions listed in Table 1 of the Standard. Certified units may be found in the AHRI Directory at www.ahridirectory.org

Door

Location	Drive Side Door Width	Opp. Drv. Side Door Width	Opening
Both sides	24 in	24 in	Outward

Supply Fan

Component: 3 | Length: 56 in | Shipping Section: 2

Fan Performance

Air Volume	Static Pressure			Fan Energy Index(FEI)	Total Input Power	Fan Shaft Power	Fan Wheel Speed		Outlet Velocity
	External	Total	Cabinet				Operating	Maximum	
14400 cfm	1.50 inWc	3.20 inWc	0.13 inWc	1.15	10.2 kW	11.13 BHP	751 rpm	1030 rpm	2286 ft/min

Fan Data

Fan Type	Blade Type / Class	Quantity of Fans	Wheel Diameter	Number of Blades	Discharge	Motor Location
Centrifugal DWDI	Forward Curved / 2	1	22.25 in	N/A	Up blast CW	To Side of Fan

Motor Data

Power	Electrical Supply	Speed	Efficiency	Enclosure	Frame Size	Supplier	Number of Poles	Lock Rotor Current	Full Load Current
15.0 HP	460/60/3 V/Hz/Phase	1750 rpm	Premium	TEFC	254 T frame	Generic	4	126.06 A	18.10 A

Fan Options

Seismic Restraint:	With snubbers	**Shaft Grounding Kit:**	Provided
Isolator Type:	Spring		

Drive Package Data*

Fan Sheave	Motor Sheave	Belt	Number of Belts	Actual Drive S.F.	Bearing Type
2B5V110	2B5V46	5VX650	2	1.33	Standard - L50 (200K)

**Daikin Applied reserves the right to provide a different but equivalent drive package*

VFD/Starter/Disconnect Data

Selection Type:	External J-Box	**Vendor:**	Factory Standard
Voltage:	460 V	**Height x Width x Depth:**	6.00 in x 6.00 in x 4.00 in
Mounting:	Door Side	**Enclosure:**	NEMA 1

Door

Location	Drive Side Door Width	Opp. Drv. Side Door Width	Opening
Both sides	30 in	30 in	Outward

Unit Sound Power (dB)

Type	63 Hz	125 Hz	250 Hz	500 Hz	1000 Hz	2000 Hz	4000 Hz	8000 Hz
Radiated:	88	87	77	70	71	58	46	51
Unit Discharge:	98	97	95	91	93	86	81	74
Unit Return:	91	88	85	81	83	76	69	59

Shipping Section Details

Section	Length in	Weight lb	Corner Weights (lb)				Center of Gravity (in)		
			P1	P2	P3	P4	XX	YY	ZZ
1	56	2066	559	531	474	502	26	49	30
2	56	1564	489	331	290	448	27	40	22
Entire Unit	**56** *Lower level only*	**3630**	**n/a**	**n/a**	**n/a**	**n/a**	**n/a**	**n/a**	**n/a**

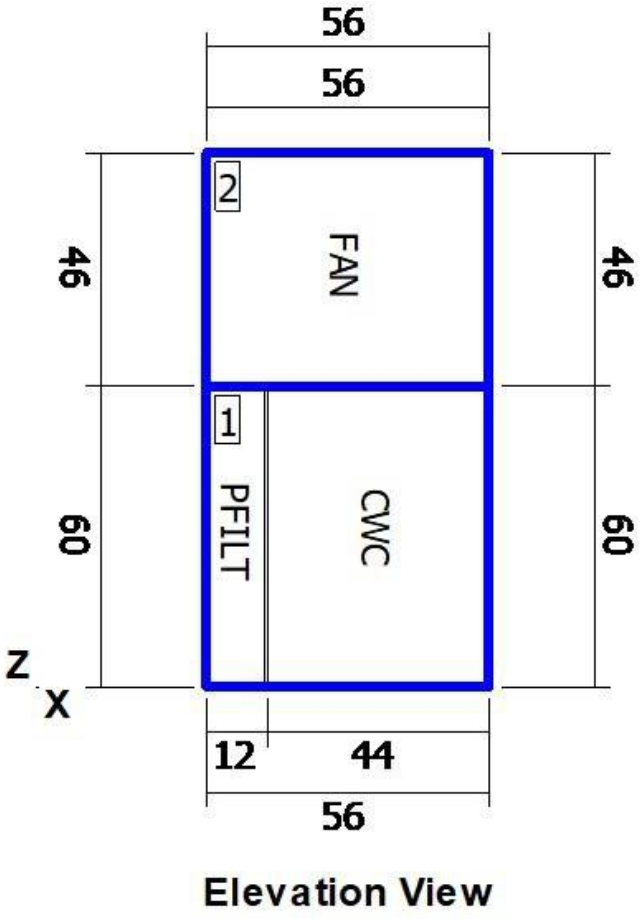

Elevation View

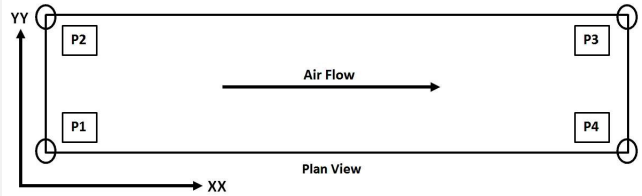

NOTE: Special components aren't included in the corner weights and center of gravity data.

NOTE: Shipping weights listed do not include weight of water (listed in coil section(s) above.

Shipping Protection	None

Supply Static Pressure Drop

Component	Option	Static Pressure Drop
Panel Filter	Panel Filter	0.65 insWg
Chilled Water coil	Chilled Water coil	0.92 insWg
Supply Fan	Cabinet	0.13 insWg
External Static	External Static	1.50 insWg
Total Supply Fan Static		3.20 insWg

Minimum Recommended Drain Pan Trap Dimensions

Shipping Section	Component	H
1	Chilled Water coil	3.64

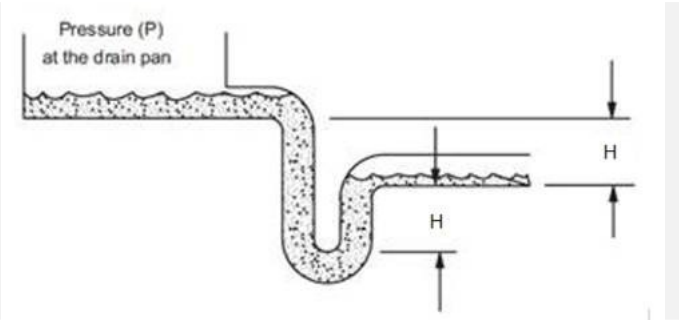

Dimensions provided as a courtesy and are recommended minimums only. Daikin is not responsible for supplying or designing drain pan traps and is not responsible for any damage caused by incorrect trap heights. The dimensions listed above should be reviewed and approved by a licensed plumbing professional.

AHRI Certification

Certified by the AHRI Central Station Air-Handling Unit (AHU) Certification Program, which is based on AHRI Standard 430/431. AHRI certified units are subject to rigorous and continuous testing, have performance ratings independently measured and are third-party verified. Certified units may be found in the AHRI Directory at www.ahridirectory.org.

Notes

Standard
1. As a standalone component, unit meets or exceeds requirements of ASHRAE 90.1 - 2007. The approving authority is responsible for compliance of multi - component building systems.

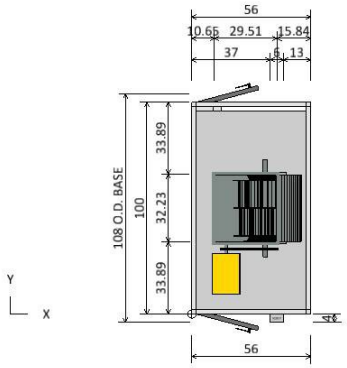

TOP DECK PLAN VIEW

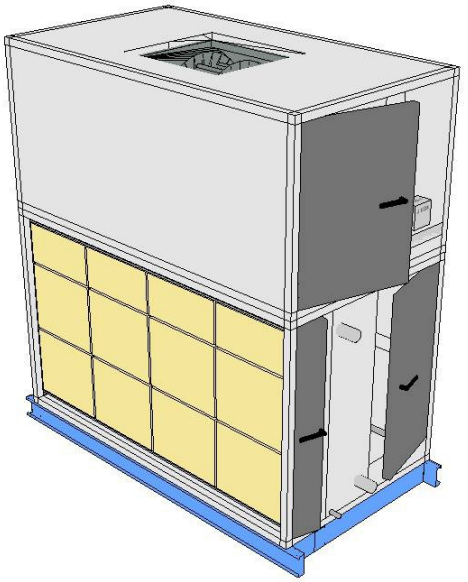

ISOMETRIC VIEW

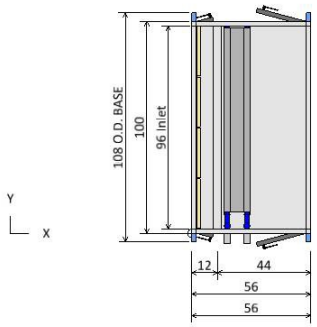

BOTTOM DECK PLAN VIEW

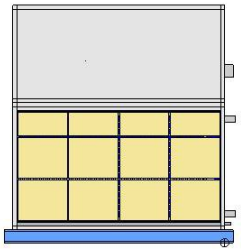

FRONT END VIEW

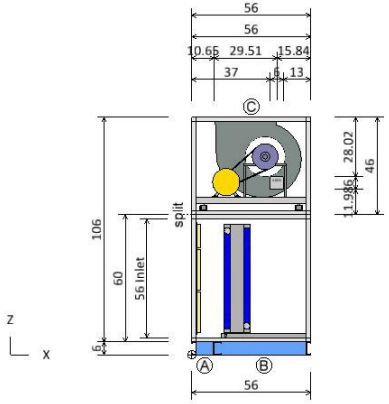

ELEVATION VIEW

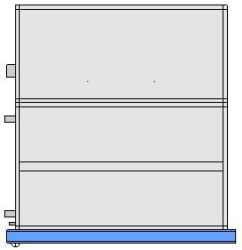

REAR END VIEW

Product Drawing	Unit Tag: AHU-1 (Eiland) Final			Sales Office: HTS Texas		
Product: Vision Air Handler	Project Name: Klein ISD Eiland ES AHU replacements			Sales Engineer:		
Model: CAH031GDAM	Jan. 16, 2026	Ver/Rev:	Sheet: 1 of 1	Scale: NTS	Tolerance: +/-0.25"	Dwg Units: in

DAIKIN
13600 Industrial Park Blvd, Minneapolis, MN 55441
www.DaikinApplied.com Software Version: 13.91

All opening dimensions have a 1" mounting flange along the inner edge. The actual airflow area of the opening is 2" smaller in each dimension.

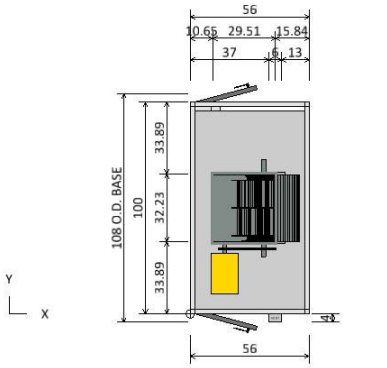

TOP DECK PLAN VIEW

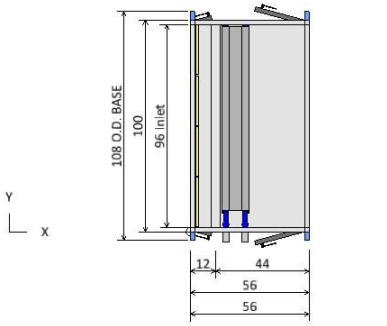

BOTTOM DECK PLAN VIEW

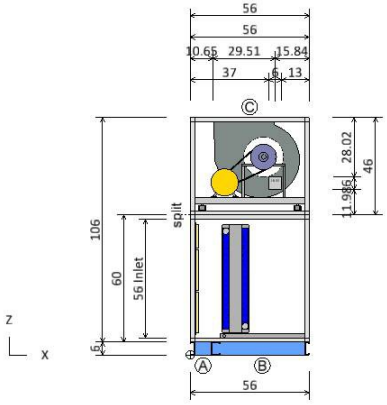

ELEVATION VIEW

Component Key		
Ⓐ	Panel Filter	
	Filter Type:	PrePleat (MERV 13)
	Right Door (WxH):	8 ins x 56 ins
	Left Door (WxH):	8 ins x 56 ins
Ⓑ	Chilled Water coil	
	Coil Model:	5WS0908B
	Total Capacity:	587125.0 Btu/hr
	Right Door (WxH):	24 ins x 50 ins
	Left Door (WxH):	24 ins x 50 ins
Ⓒ	Supply Fan	
	Fan Type:	Centrifugal DWDI
	Fan Size (Class):	22 (2)
	Air Flowrate:	14400.0 cfm
	T.S.P:	3.2 insWg
	Motor Power:	15.0 HP
	Right Door (WxH):	30 ins x 42 ins
	Left Door (WxH):	30 ins x 42 ins

Product Drawing	Unit Tag: AHU-1 (Eiland) Final			Sales Office: HTS Texas		
Product: Vision Air Handler	Project Name: Klein ISD Eiland ES AHU replacements			Sales Engineer:		
Model: CAH031GDAM	Jan. 16, 2026	Ver/Rev:	Sheet: 1 of 1	Scale: NTS	Tolerance: +/-0.25"	Dwg Units: in

DAIKIN
13600 Industrial Park Blvd, Minneapolis, MN 55441
www.DaikinApplied.com Software Version: 13.91

All opening dimensions have a 1" mounting flange along the inner edge. The actual airflow area of the opening is 2" smaller in each dimension.

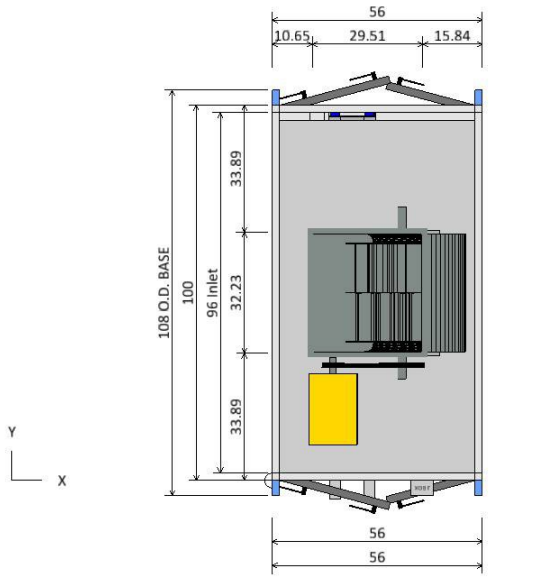

PLAN VIEW

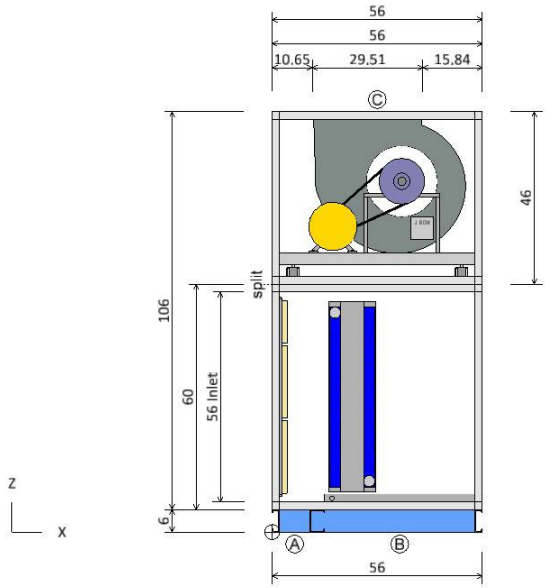

ELEVATION VIEW

Component Key

	Type	X	Y	Z	Wid	Hgt
Ⓐ	Panel Filter Opening	0.00	2.00	8.00	96.00	56.00
Ⓒ	Supply Fan Fan Discharge	27.44	33.89	112.00	32.23	29.51

Note: Dimensions are measured from the origin point.
Note: Openings with or without dampers are recessed into the unit by approximately 1.75 in.

Opening/Damper Connections	Unit Tag: AHU-1 (Eiland) Final			Sales Office: HTS Texas		
Product: Vision Air Handler	Project Name: Klein ISD Eiland ES AHU replacements			Sales Engineer:		
Model: CAH031GDAM	Jan. 16, 2026	Ver/Rev:	Sheet: 1 of 1	Scale: NTS	Tolerance: +/-0.25"	Dwg Units: in

DAIKIN
13600 Industrial Park Blvd, Minneapolis, MN 55441
www.DaikinApplied.com Software Version: 13.91

All opening dimensions have a 1" mounting flange along the inner edge. The actual airflow area of the opening is 2" smaller in each dimension.

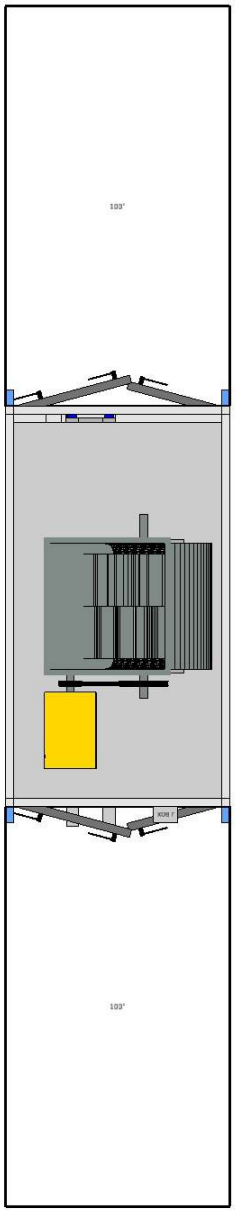

PLAN VIEW

Notes
Check local electrical component service clearance codes for specific distances. Access is only required on one side of the unit.

Service Clearance View	Unit Tag: AHU-1 (Eiland) Final			Sales Office: HTS Texas		
Product: Vision Air Handler	Project Name: Klein ISD Eiland ES AHU replacements			Sales Engineer:		
Model: CAH031GDAM	Jan. 16, 2026	Ver/Rev:	Sheet: 1 of 1	Scale: NTS	Tolerance: +/-0.25"	Dwg Units: in

DAIKIN
13600 Industrial Park Blvd, Minneapolis, MN 55441
www.DaikinApplied.com Software Version: 13.91

All opening dimensions have a 1" mounting flange along the inner edge. The actual airflow area of the opening is 2" smaller in each dimension.

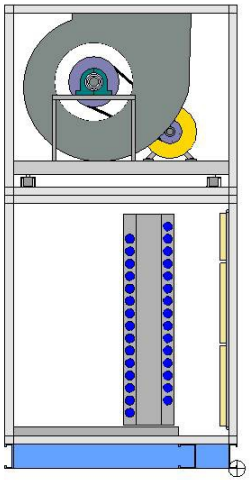

LEFT ELEVATION VIEW

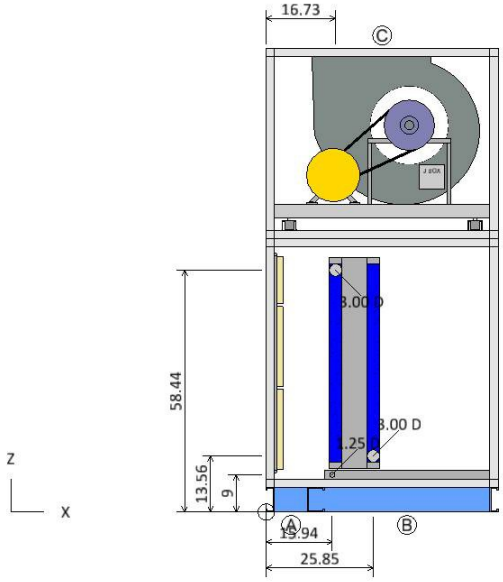

RIGHT ELEVATION VIEW

Coil and Drain Connections

	Type	X	Y	Z	Diam
	Chilled Water coil				
Ⓑ	Condensate drain conn:	15.94	-2.90	9.00	1.25
	Cold water inlet:	25.85	-7.00*	13.56	3.00
	Cold water outlet:	16.73	-7.00*	58.44	3.00

Notes:
Dimensions are measured from the origin point.
* value varies +/- 1 in.

Coil and Drain Connections	Unit Tag: AHU-1 (Eiland) Final			Sales Office: HTS Texas		
Product: Vision Air Handler	Project Name: Klein ISD Eiland ES AHU replacements			Sales Engineer:		
Model: CAH031GDAM	Jan. 16, 2026	Ver/Rev:	Sheet: 1 of 1	Scale: NTS	Tolerance: +/-0.25"	Dwg Units: in

DAIKIN
13600 Industrial Park Blvd, Minneapolis, MN 55441
www.DaikinApplied.com Software Version: 13.91

All opening dimensions have a 1" mounting flange along the inner edge. The actual airflow area of the opening is 2" smaller in each dimension.

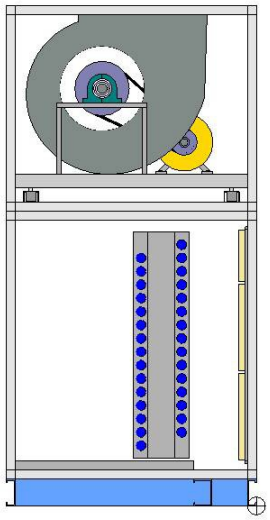

LEFT ELEVATION VIEW

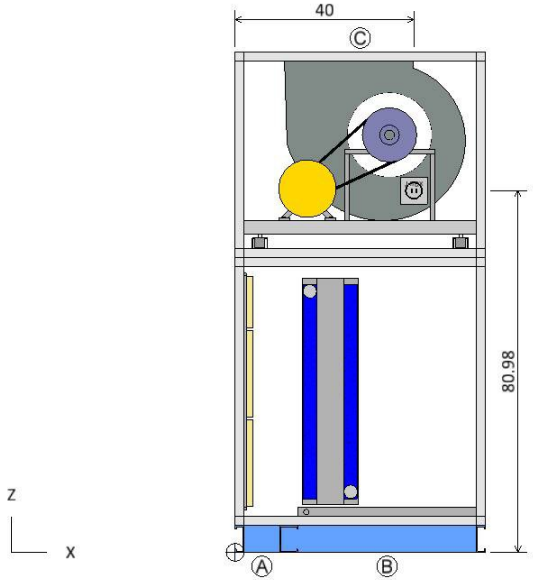

RIGHT ELEVATION VIEW

Component Key

	Type	X	Y	Z	Volts	Phase
Ⓒ	Supply Fan Fan	40.00	0.00	80.98	460	3

Note: Dimensions are measured from the origin point.

Electrical Connections	Unit Tag: AHU-1 (Eiland) Final			Sales Office: HTS Texas		
Product: Vision Air Handler	Project Name: Klein ISD Eiland ES AHU replacements			Sales Engineer:		
Model: CAH031GDAM	Jan. 16, 2026	Ver/Rev:	Sheet: 1 of 1	Scale: NTS	Tolerance: +/-0.25"	Dwg Units: in

DAIKIN
13600 Industrial Park Blvd, Minneapolis, MN 55441
www.DaikinApplied.com Software Version: 13.91

All opening dimensions have a 1" mounting flange along the inner edge. The actual airflow area of the opening is 2" smaller in each dimension.

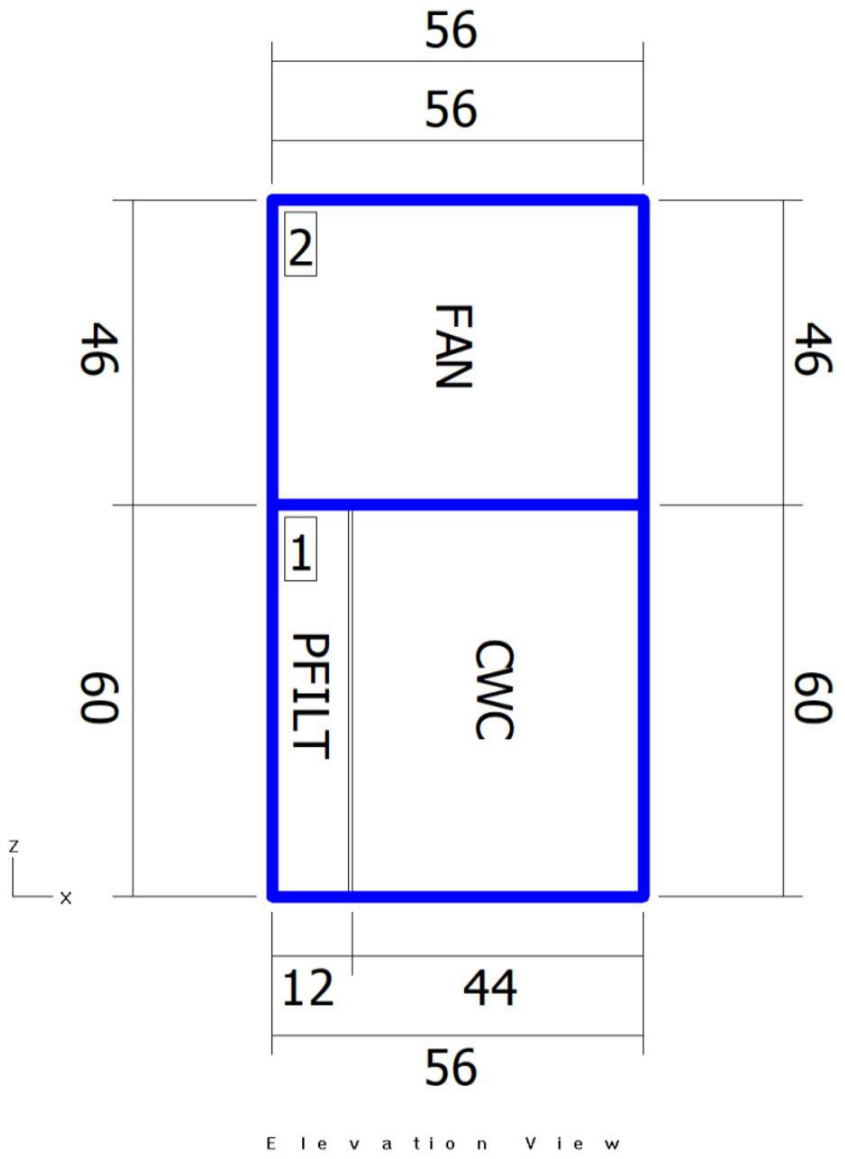

Elevation View

Shipping Sections

Section	Weight (lb)	X	Y	Z
Section 1	2066.10	56	100	60
Section 2	1563.55	56	100	46
Total Unit	3629.65	56	100	106

Note: Base rails, curb ready base, coil connectors, drain connectors, and control boxes not included in height X, Y, Z dimensions.
Shipping section may be 2" longer in air flow direction due to internal splice joint.

Shipping Sections	Unit Tag: AHU-1 (Eiland) Final			Sales Office: HTS Texas		
Product: Vision Air Handler	Project Name: Klein ISD Eiland ES AHU replacements			Sales Engineer:		
Model: CAH031GDAM	Jan. 16, 2026	Ver/Rev:	Sheet: 1 of 1	Scale: NTS	Tolerance: +/-0.25"	Dwg Units: in

DAIKIN
13600 Industrial Park Blvd, Minneapolis, MN 55441
www.DaikinApplied.com Software Version: 13.91

All opening dimensions have a 1" mounting flange along the inner edge. The actual airflow area of the opening is 2" smaller in each dimension.

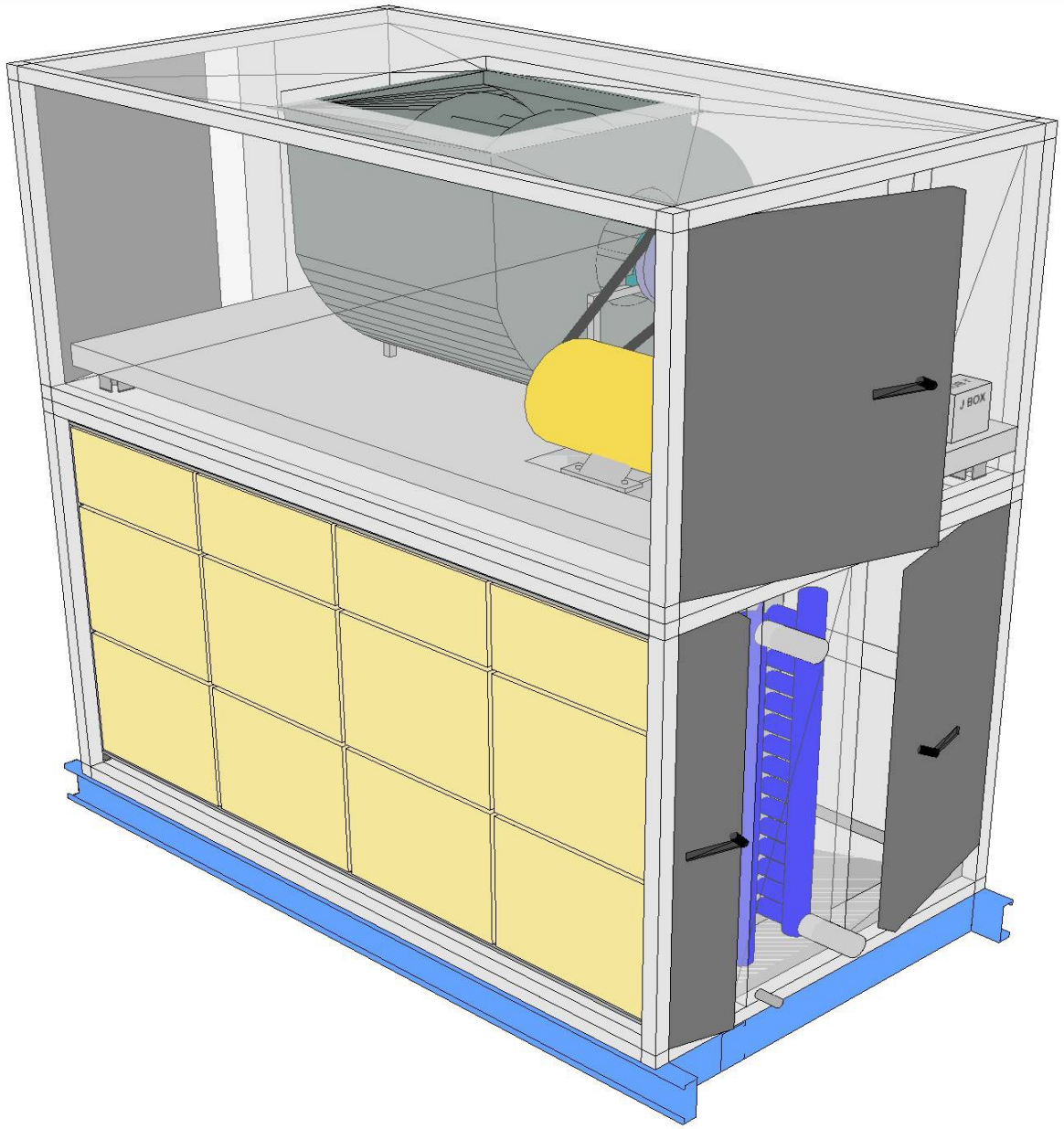

Product Drawing	Unit Tag: AHU-1 (Eiland) Final			Sales Office: HTS Texas		
Product: Vision Air Handler	Project Name: Klein ISD Eiland ES AHU replacements			Sales Engineer:		
Model: CAH031GDAM	Jan. 16, 2026	Ver/Rev:	Sheet: 1 of 1	Scale: NTS	Tolerance: +/-0.25"	Dwg Units: in

DAIKIN
13600 Industrial Park Blvd, Minneapolis, MN 55441
www.DaikinApplied.com Software Version: 13.91

All opening dimensions have a 1" mounting flange along the inner edge. The actual airflow area of the opening is 2" smaller in each dimension.

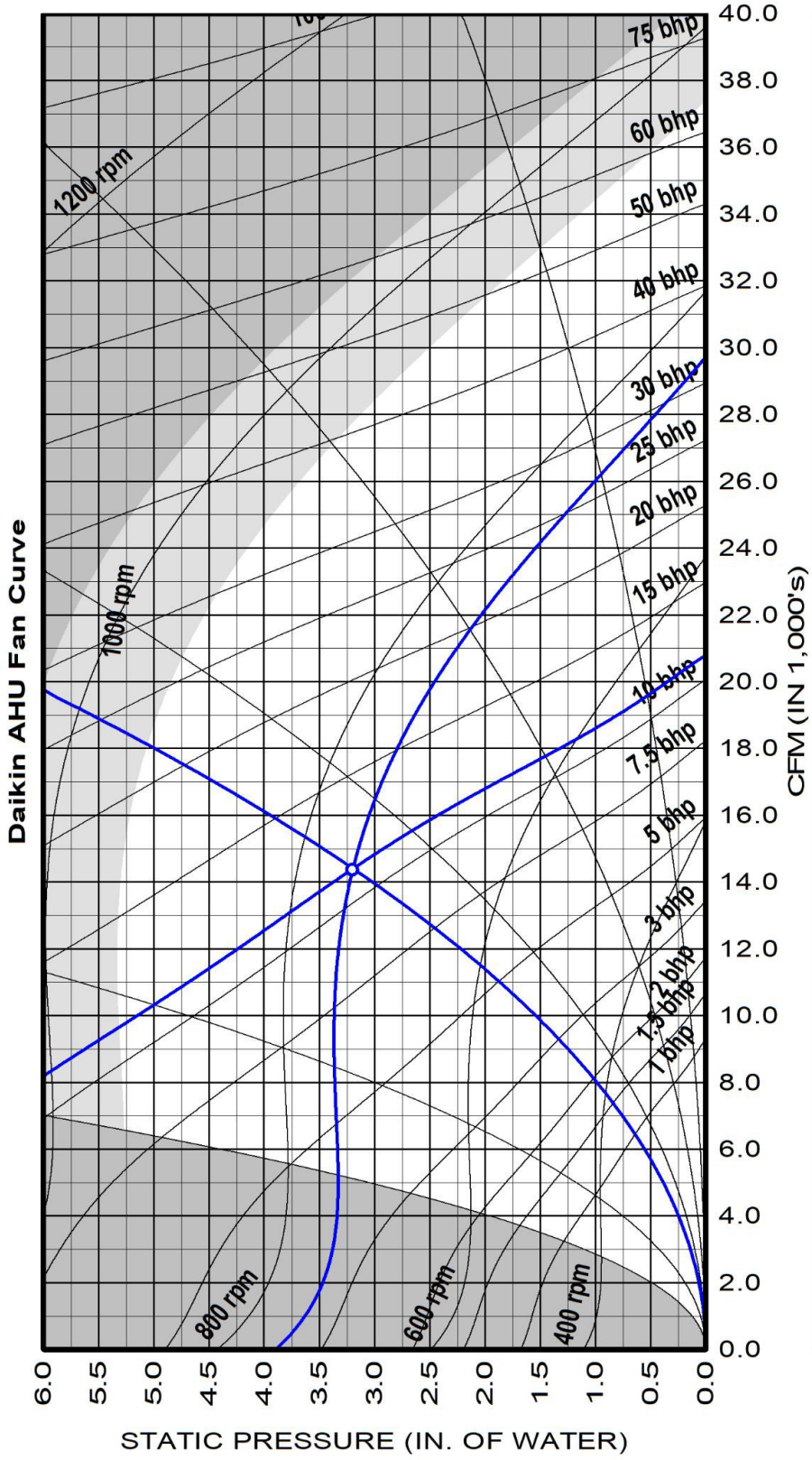

22.25" Forward Curved Supply Fan at Standard Conditions

Air volume	14400	cfm	Fan speed	751	rpm
Total static	3.20	insWg	Max speed	1030	rpm
Fan Shaft Power	11.1	bhp	Efficiency	65.0	%
Fan Energy Index(FEI)	1.15				

Unit tagging AHU-1 (Eiland) Final Date January-16-2026

Job name Klein ISD Eiland ES AHU replacements Time 23:47

Supply fan performance is certified in accordance with the Central Station Air-Handling Unit Certification Program, which is based on AHRI Standard 430.

Job Information	Technical Data Sheet
Job Name	Klein ISD Eiland ES AHU replacements
Date	January 16 2026
Submitted By	Salas O'Brien
Software Version	13.82
Unit Tag	AHU-2 (Eiland) Final

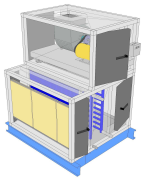

Unit Overview

Model Number	Supply					
	Air Volume cfm	Static Pressure		External Dimensions		
		External inWc	Total inWc	Height in	Width in	Length in
CAH008GDAM	3650	1.50	3.07	36*	54*	50**

**Not including base rails, coil connectors, drain connectors and control boxes.*

***Total lower deck length.*

Unit

Model Number:	CAH008GDAM		
Approval:	ETL Listed / ETL Listed to Canadian Safety Standards (ETL Label / ETLc Label)		
Outer Panel:	18 gauge G90 Galvanized Steel (unpainted)		
Liner:	24 gauge Galvanized Steel (unless noted per section)		
Insulation:	R-13 Injected Foam		
Unit Configuration:	Stacked / vertical	**Drive (Handling) Location:**	Right
Base:	6" formed channel	**Wall Thickness:**	2 in
Altitude:	0 ft	**Parts Warranty:**	Additional One Year, Two Year Total

Panel Filter

Component: 1 | Length: 12 in | Shipping Section: 1

Type	Efficiency	Nominal Face Velocity	Actual Face Velocity	Actual Face Area	Air Volume	Filter Loading
Pre Pleat	MERV 13	456 ft/min	449 ft/min	8.1 ft²	3650 cfm	Side

Air Pressure Drop				Number of Filters	Height	Width	Depth
Clean Air	Mean Air	Dirty Air	User Spec				
0.30 inWc	**0.65** inWc	1.00 inWc	N/A	2	24 in	20 in	2 in
				1	24 in	12 in	2 in

Door

Location	Drive Side Door Width	Opp. Drv. Side Door Width	Opening
Both sides	8 in	8 in	Outward

Chilled Water Coil	Component: 2	Length: 38 in	Shipping Section: 1

Coil Model	Total Capacity	Sensible Capacity	Number of Coils	Number of Rows	Fins per Inch	Tube Diameter	Tube Spacing (Face x Row)
5WH0808B	146409 Btu/hr	94343 Btu/hr	1	8	8	0.625 in	1.50 in x 1.299 in

Coil Operating Weight	Coil Dry Weight
262 lb	190 lb

Air Volume	Air Temperature				Coil Air Pressure Drop	Finned Height	Finned Length	Face Area	Face Velocity
	Entering		Leaving						
	Dry Bulb	Wet Bulb	Dry Bulb	Wet Bulb					
3650 cfm	78.0 °F	67.0 °F	54.4 °F	54.0 °F	0.79 inWc	27 in	41 in	7.69 ft²	475 ft/min

Water						
Entering	Leaving	Flow Rate	Pressure Drop	Velocity	Fluid Volume	Fluid Weight
45.0 °F	57.2 °F	24.00 gpm	7.90 ftHd	2.90 ft/s	8.0 gal	72.00 lb

Connection [Data Per Coil]				Min. Fin Surface Temp.	Min. Tube Wall Surface Temp.	Fouling Factor
Type	Size	Location	Material			
Threaded	1.50 in	Drive side	Carbon steel	45.0 °F	45.0 °F	0.000

Material				Drain Pan	Drain Side
Fin	Tube	Header	Case		
Aluminum .0075 in	Copper .020 in	Copper	Stainless steel	Stainless steel	Drive side

AHRI 410 Certification

Certified in accordance with the AHRI Forced-Circulation Air-Cooling and Air-Heating Coils Certification Program which is based on AHRI Standard 410 within the Range of Standard Rating Conditions listed in Table 1 of the Standard. Certified units may be found in the AHRI Directory at www.ahridirectory.org

Door

Location	Drive Side Door Width	Opp. Drv. Side Door Width	Opening
Both sides	18 in	18 in	Outward

Supply Fan

Component: 3 | Length: 36 in | Shipping Section: 2

Fan Performance

Air Volume	Static Pressure			Fan Energy Index(FEI)	Total Input Power	Fan Shaft Power	Fan Wheel Speed		Outlet Velocity
	External	Total	Cabinet				Operating	Maximum	
3650 cfm	1.50 inWc	3.07 inWc	0.13 inWc	0.85	3.7 kW	3.89 BHP	1858 rpm	2518 rpm	3476 ft/min

Fan Data

Fan Type	Blade Type / Class	Quantity of Fans	Wheel Diameter	Number of Blades	Discharge	Motor Location
Centrifugal DWDI	Forward Curved / 2	1	10.62 in	N/A	Up blast CW	To Side of Fan

Motor Data

Power	Electrical Supply	Speed	Efficiency	Enclosure	Frame Size	Supplier	Number of Poles	Lock Rotor Current	Full Load Current
5.0 HP	460/60/3 V/Hz/Phase	1750 rpm	Premium	TEFC	184 T frame	Generic	4	47.04 A	6.70 A

Fan Options

Shaft Grounding Kit:	Provided	**Isolator Type:**	Spring

Drive Package Data*

Fan Sheave	Motor Sheave	Belt	Number of Belts	Actual Drive S.F.	Bearing Type
2AK39H	2AK41H	AX24	2	1.21	Standard - L50 (200K)

**Daikin Applied reserves the right to provide a different but equivalent drive package*

VFD/Starter/Disconnect Data

Selection Type:	External J-Box	**Vendor:**	Factory Standard
Voltage:	460 V	**Height x Width x Depth:**	6.00 in x 6.00 in x 4.00 in
Mounting:	Door Side	**Enclosure:**	NEMA 1

Door

Location	Drive Side Door Width	Opp. Drv. Side Door Width	Opening
Both sides	20 in	28 in	Outward

Unit Sound Power (dB)

Type	63 Hz	125 Hz	250 Hz	500 Hz	1000 Hz	2000 Hz	4000 Hz	8000 Hz
Radiated:	78	81	68	64	63	57	46	51
Unit Discharge:	88	91	86	85	85	85	82	79
Unit Return:	81	82	76	75	75	75	70	64

Shipping Section Details

Section	Length in	Weight lb	Corner Weights (lb)				Center of Gravity (in)		
			P1	P2	P3	P4	XX	YY	ZZ
1	50	817	214	200	194	209	25	26	20
2	36	565	167	132	115	151	17	24	16
Entire Unit	**50** *Lower level only*	**1382**	**n/a**	**n/a**	**n/a**	**n/a**	**n/a**	**n/a**	**n/a**

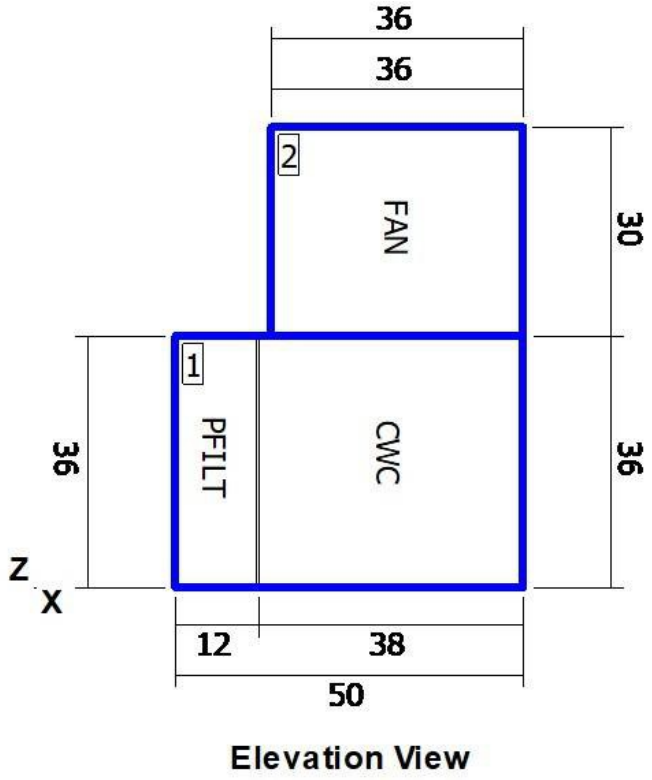

Elevation View

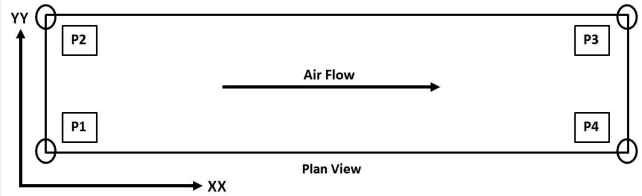

NOTE: Special components aren't included in the corner weights and center of gravity data.

NOTE: Shipping weights listed do not include weight of water (listed in coil section(s) above.

Shipping Protection	None

Supply Static Pressure Drop

Component	Option	Static Pressure Drop
Panel Filter	Panel Filter	0.65 insWg
Chilled Water coil	Chilled Water coil	0.79 insWg
Supply Fan	Cabinet	0.13 insWg
External Static	External Static	1.50 insWg
Total Supply Fan Static		3.07 insWg

Minimum Recommended Drain Pan Trap Dimensions

Shipping Section	Component	H
1	Chilled Water coil	3.38

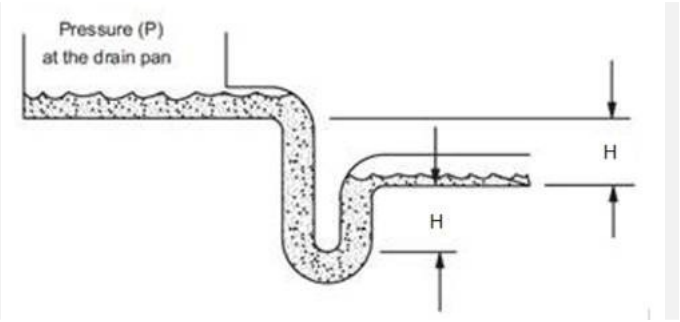

Dimensions provided as a courtesy and are recommended minimums only. Daikin is not responsible for supplying or designing drain pan traps and is not responsible for any damage caused by incorrect trap heights. The dimensions listed above should be reviewed and approved by a licensed plumbing professional.

AHRI Certification

Certified by the AHRI Central Station Air-Handling Unit (AHU) Certification Program, which is based on AHRI Standard 430/431. AHRI certified units are subject to rigorous and continuous testing, have performance ratings independently measured and are third-party verified. Certified units may be found in the AHRI Directory at www.ahridirectory.org.

Notes

Standard
1. As a standalone component, unit meets or exceeds requirements of ASHRAE 90.1 - 2007. The approving authority is responsible for compliance of multi - component building systems.

BQZQ3P

Klein ISD Eiland ES AHU re

23

1/16/2026

AHU-2 (Eiland) Final

Drawing

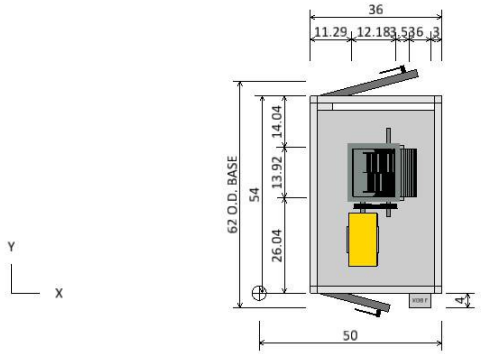

TOP DECK PLAN VIEW

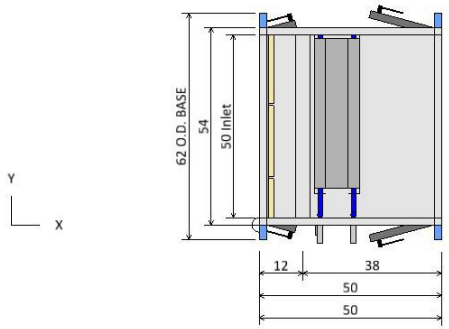

BOTTOM DECK PLAN VIEW

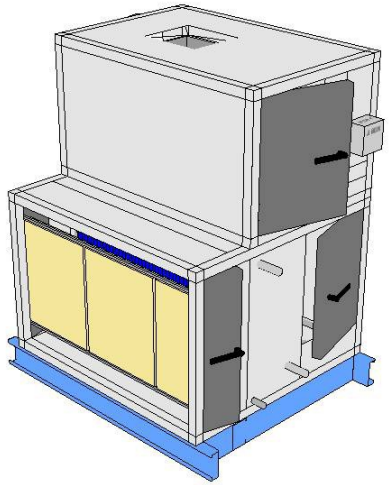

ISOMETRIC VIEW

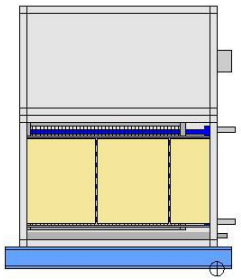

FRONT END VIEW

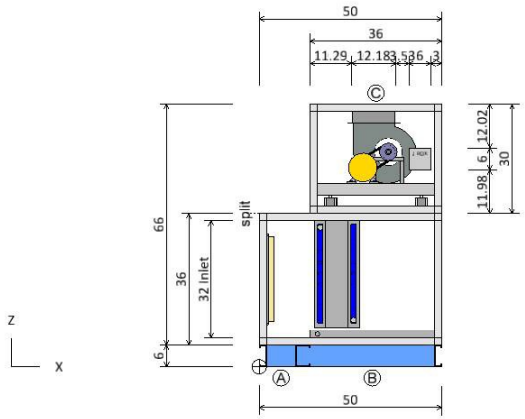

ELEVATION VIEW

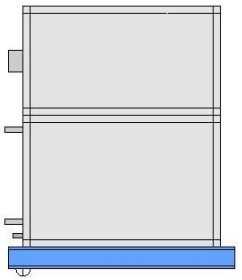

REAR END VIEW

Product Drawing	Unit Tag: AHU-2 (Eiland) Final			Sales Office: HTS Texas		
Product: Vision Air Handler	Project Name: Klein ISD Eiland ES AHU replacements			Sales Engineer:		
Model: CAH008GDAM	Jan. 16, 2026	Ver/Rev:	Sheet: 1 of 1	Scale: NTS	Tolerance: +/-0.25"	Dwg Units: in

DAIKIN
13600 Industrial Park Blvd, Minneapolis, MN 55441
www.DaikinApplied.com Software Version: 13.91

All opening dimensions have a 1" mounting flange along the inner edge. The actual airflow area of the opening is 2" smaller in each dimension.

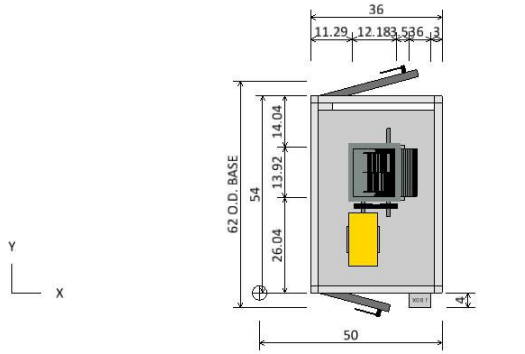

TOP DECK PLAN VIEW

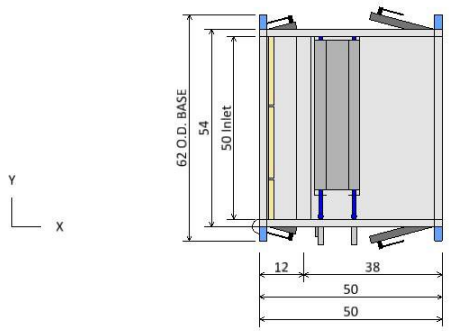

BOTTOM DECK PLAN VIEW

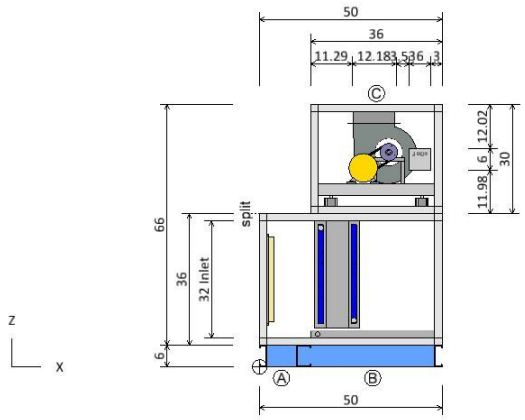

ELEVATION VIEW

Component Key		
Ⓐ	Panel Filter	
	Filter Type:	PrePleat (MERV 13)
	Right Door (WxH):	8 ins x 32 ins
	Left Door (WxH):	8 ins x 32 ins
Ⓑ	Chilled Water coil	
	Coil Model:	5WH0808B
	Total Capacity:	146409.0 Btu/hr
	Right Door (WxH):	18 ins x 26 ins
	Left Door (WxH):	18 ins x 26 ins
Ⓒ	Supply Fan	
	Fan Type:	Centrifugal DWDI
	Fan Size (Class):	10 (2)
	Air Flowrate:	3650.0 cfm
	T.S.P:	3.1 insWg
	Motor Power:	5.0 HP
	Right Door (WxH):	20 ins x 26 ins
	Left Door (WxH):	28 ins x 26 ins

Product Drawing	Unit Tag: AHU-2 (Eiland) Final			Sales Office: HTS Texas		
Product: Vision Air Handler	Project Name: Klein ISD Eiland ES AHU replacements			Sales Engineer:		
Model: CAH008GDAM	Jan. 16, 2026	Ver/Rev:	Sheet: 1 of 1	Scale: NTS	Tolerance: +/-0.25"	Dwg Units: in

DAIKIN
13600 Industrial Park Blvd, Minneapolis, MN 55441
www.DaikinApplied.com Software Version: 13.91

All opening dimensions have a 1" mounting flange along the inner edge. The actual airflow area of the opening is 2" smaller in each dimension.

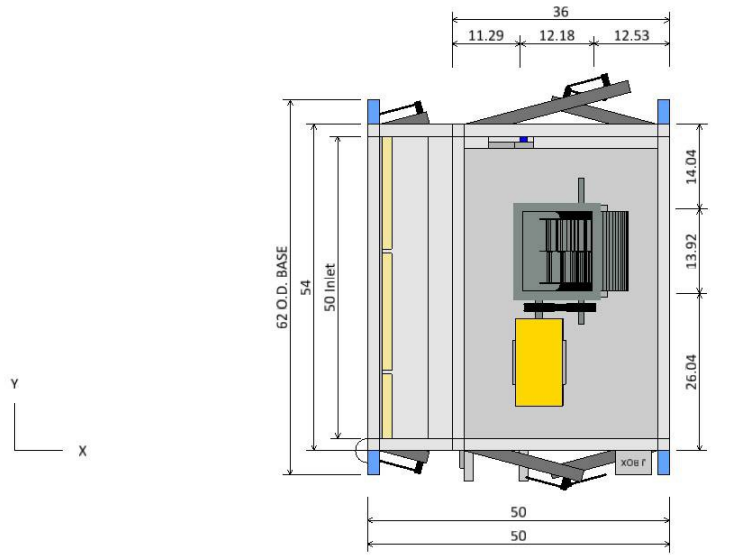

PLAN VIEW

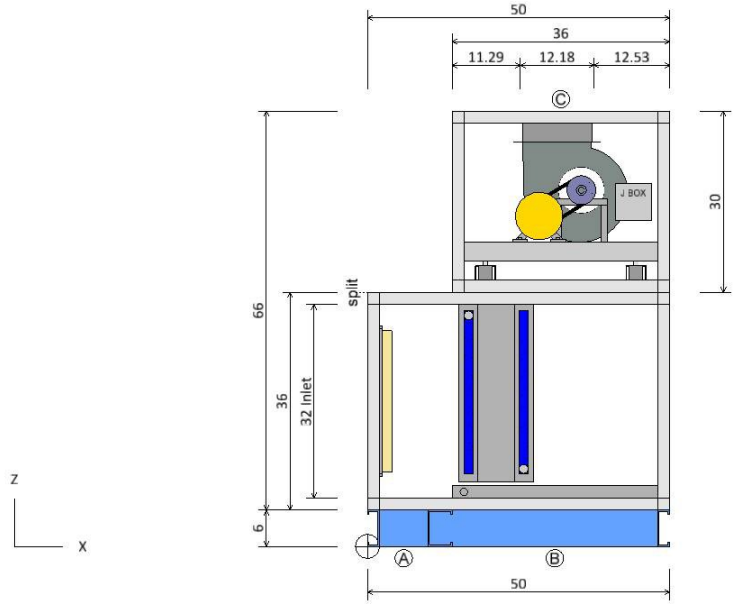

ELEVATION VIEW

Component Key

	Type	X	Y	Z	Wid	Hgt
Ⓐ	Panel Filter Opening	0.00	2.00	8.00	50.00	32.00
Ⓒ	Supply Fan Fan Discharge	30.13	14.04	72.00	13.92	12.18

Note: Dimensions are measured from the origin point.
Note: Openings with or without dampers are recessed into the unit by approximately 1.75 in.

Opening/Damper Connections	Unit Tag: AHU-2 (Eiland) Final			Sales Office: HTS Texas		
Product: Vision Air Handler	Project Name: Klein ISD Eiland ES AHU replacements			Sales Engineer:		
Model: CAH008GDAM	Jan. 16, 2026	Ver/Rev:	Sheet: 1 of 1	Scale: NTS	Tolerance: +/-0.25"	Dwg Units: in

DAIKIN
13600 Industrial Park Blvd, Minneapolis, MN 55441
www.DaikinApplied.com Software Version: 13.91

All opening dimensions have a 1" mounting flange along the inner edge. The actual airflow area of the opening is 2" smaller in each dimension.

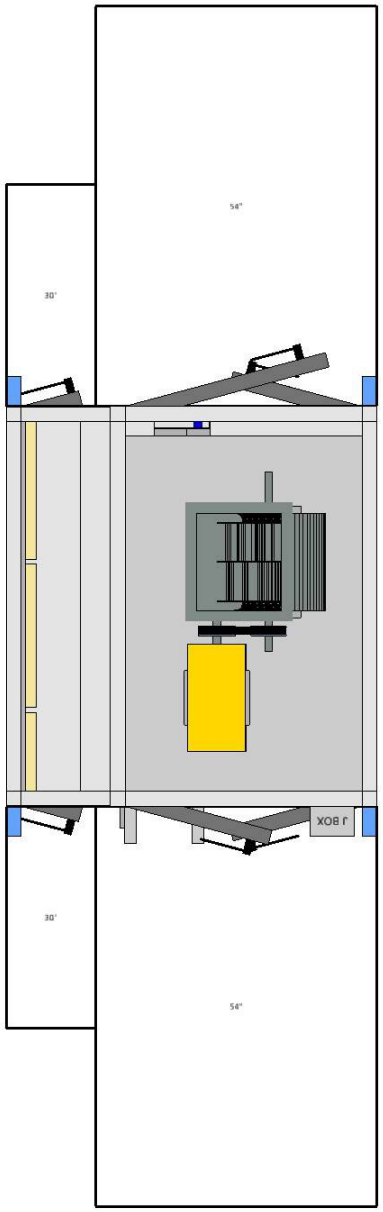

PLAN VIEW

Notes
Check local electrical component service clearance codes for specific distances. Access is only required on one side of the unit.

Service Clearance View	Unit Tag: AHU-2 (Eiland) Final			Sales Office: HTS Texas		
Product: Vision Air Handler	Project Name: Klein ISD Eiland ES AHU replacements			Sales Engineer:		
Model: CAH008GDAM	Jan. 16, 2026	Ver/Rev:	Sheet: 1 of 1	Scale: NTS	Tolerance: +/-0.25"	Dwg Units: in

DAIKIN
13600 Industrial Park Blvd, Minneapolis, MN 55441
www.DaikinApplied.com Software Version: 13.91

All opening dimensions have a 1" mounting flange along the inner edge. The actual airflow area of the opening is 2" smaller in each dimension.

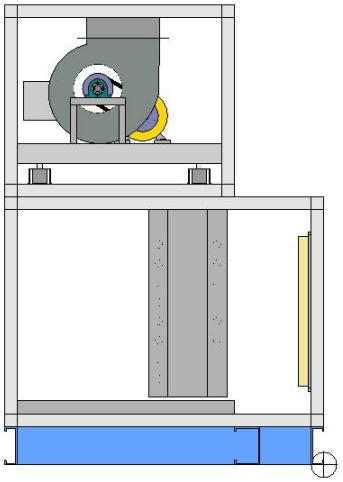

LEFT ELEVATION VIEW

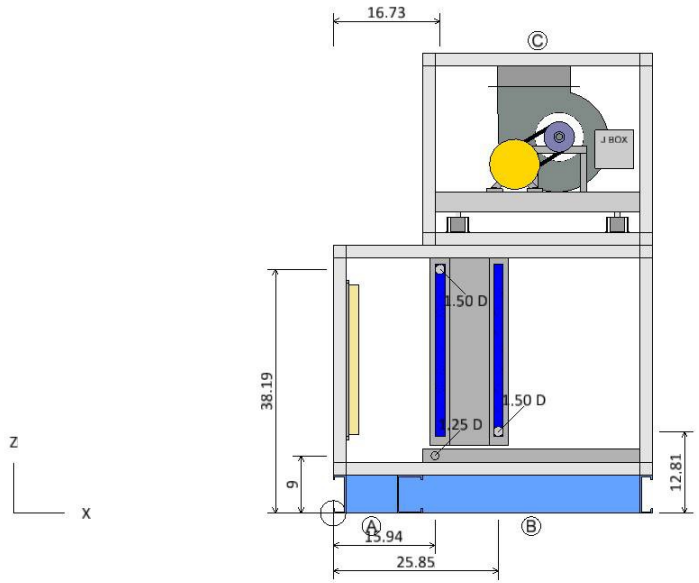

RIGHT ELEVATION VIEW

Coil and Drain Connections

	Type	X	Y	Z	Diam
	Chilled Water coil				
Ⓑ	Condensate drain conn:	15.94	-2.90	9.00	1.25
	Cold water inlet:	25.85	-7.00*	12.81	1.50
	Cold water outlet:	16.73	-7.00*	38.19	1.50

Notes:
Dimensions are measured from the origin point.
* value varies +/- 1 in.

Coil and Drain Connections	Unit Tag: AHU-2 (Eiland) Final			Sales Office: HTS Texas		
Product: Vision Air Handler	Project Name: Klein ISD Eiland ES AHU replacements			Sales Engineer:		
Model: CAH008GDAM	Jan. 16, 2026	Ver/Rev:	Sheet: 1 of 1	Scale: NTS	Tolerance: +/-0.25"	Dwg Units: in

DAIKIN
13600 Industrial Park Blvd, Minneapolis, MN 55441
www.DaikinApplied.com Software Version: 13.91

All opening dimensions have a 1" mounting flange along the inner edge. The actual airflow area of the opening is 2" smaller in each dimension.

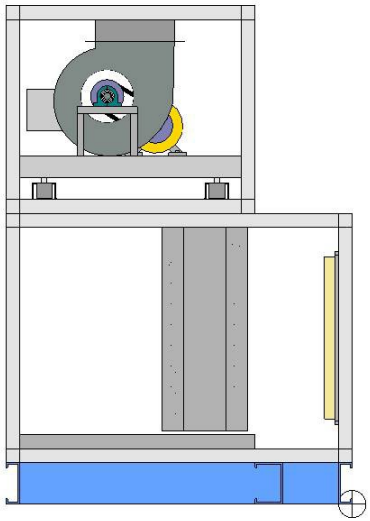

LEFT ELEVATION VIEW

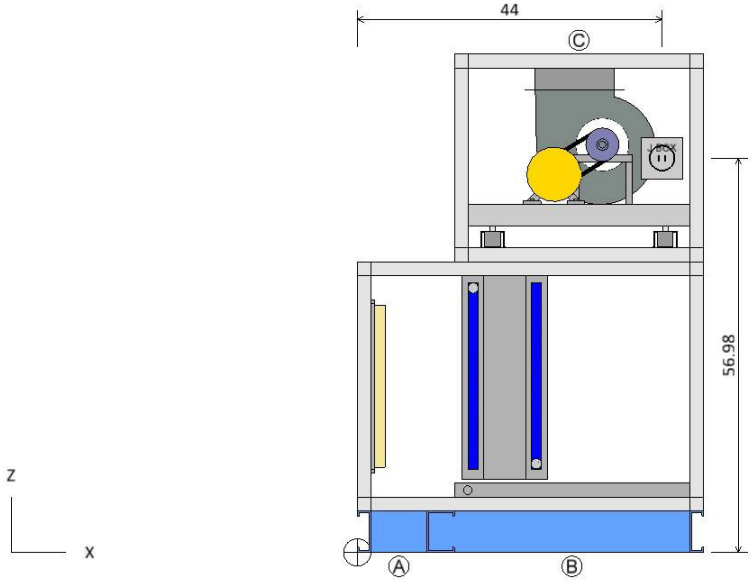

RIGHT ELEVATION VIEW

Component Key

	Type	X	Y	Z	Volts	Phase
Ⓒ	Supply Fan Fan	44.00	0.00	56.98	460	3

Note: Dimensions are measured from the origin point.

Electrical Connections	Unit Tag: AHU-2 (Eiland) Final			Sales Office: HTS Texas		
Product: Vision Air Handler	Project Name: Klein ISD Eiland ES AHU replacements			Sales Engineer:		
Model: CAH008GDAM	Jan. 16, 2026	Ver/Rev:	Sheet: 1 of 1	Scale: NTS	Tolerance: +/-0.25"	Dwg Units: in

DAIKIN
13600 Industrial Park Blvd, Minneapolis, MN 55441
www.DaikinApplied.com Software Version: 13.91

All opening dimensions have a 1" mounting flange along the inner edge. The actual airflow area of the opening is 2" smaller in each dimension.

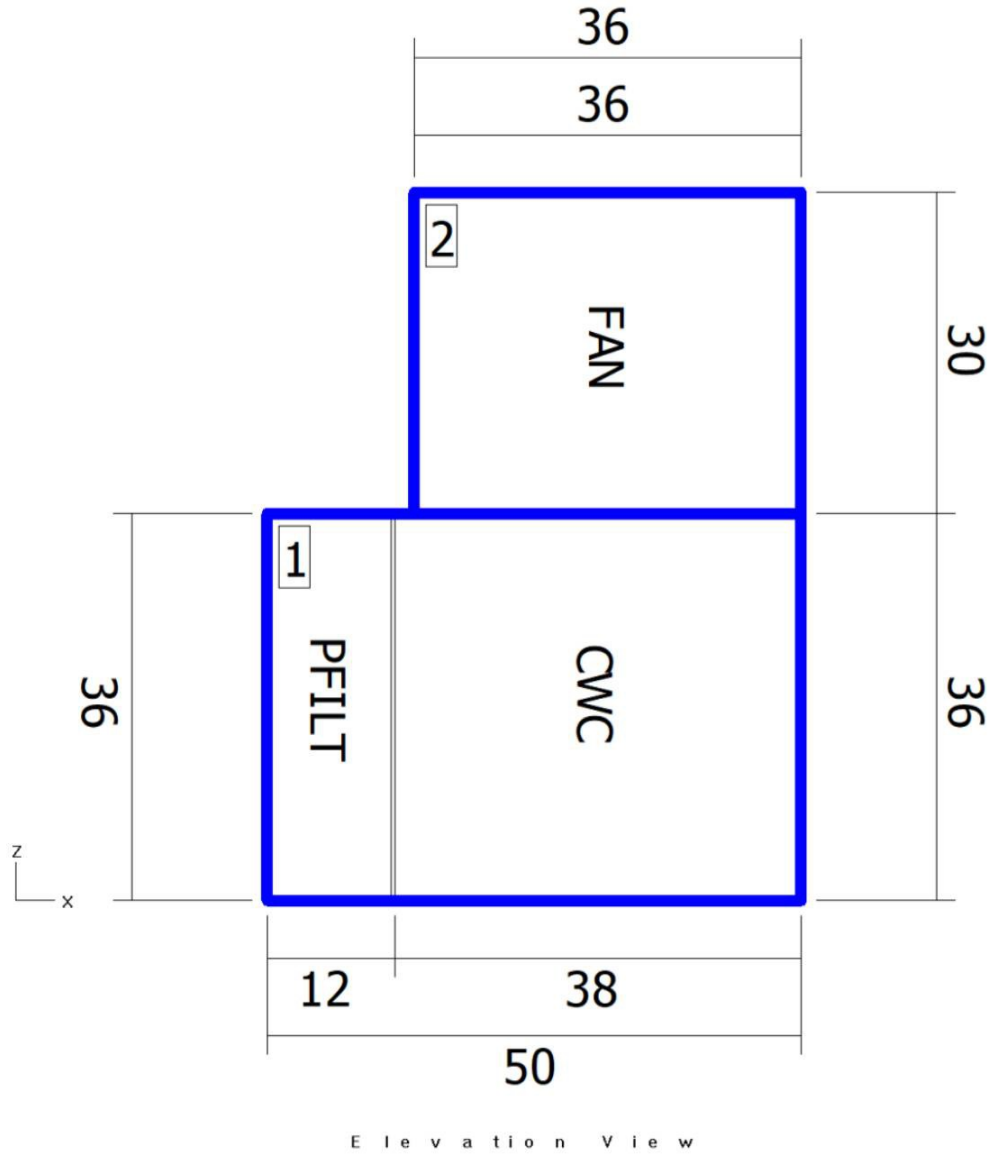

Elevation View

Shipping Sections

Section	Weight (lb)	X	Y	Z
Section 1	817.21	50	54	36
Section 2	564.77	36	54	30
Total Unit	1381.98	50	54	66

Note: Base rails, curb ready base, coil connectors, drain connectors, and control boxes not included in height X, Y, Z dimensions.
Shipping section may be 2" longer in air flow direction due to internal splice joint.

Shipping Sections	Unit Tag: AHU-2 (Eiland) Final			Sales Office: HTS Texas		
Product: Vision Air Handler	Project Name: Klein ISD Eiland ES AHU replacements			Sales Engineer:		
Model: CAH008GDAM	Jan. 16, 2026	Ver/Rev:	Sheet: 1 of 1	Scale: NTS	Tolerance: +/-0.25"	Dwg Units: in

DAIKIN
13600 Industrial Park Blvd, Minneapolis, MN 55441
www.DaikinApplied.com Software Version: 13.91

All opening dimensions have a 1" mounting flange along the inner edge. The actual airflow area of the opening is 2" smaller in each dimension.

Product Drawing	Unit Tag: AHU-2 (Eiland) Final			Sales Office: HTS Texas			DAIKIN
Product: Vision Air Handler	Project Name: Klein ISD Eiland ES AHU replacements			Sales Engineer:			13600 Industrial Park Blvd, Minneapolis, MN 55441
Model: CAH008GDAM	Jan. 16, 2026	Ver/Rev:	Sheet: 1 of 1	Scale: NTS	Tolerance: +/-0.25"	Dwg Units: in	www.DaikinApplied.com Software Version: 13.91

All opening dimensions have a 1" mounting flange along the inner edge. The actual airflow area of the opening is 2" smaller in each dimension.

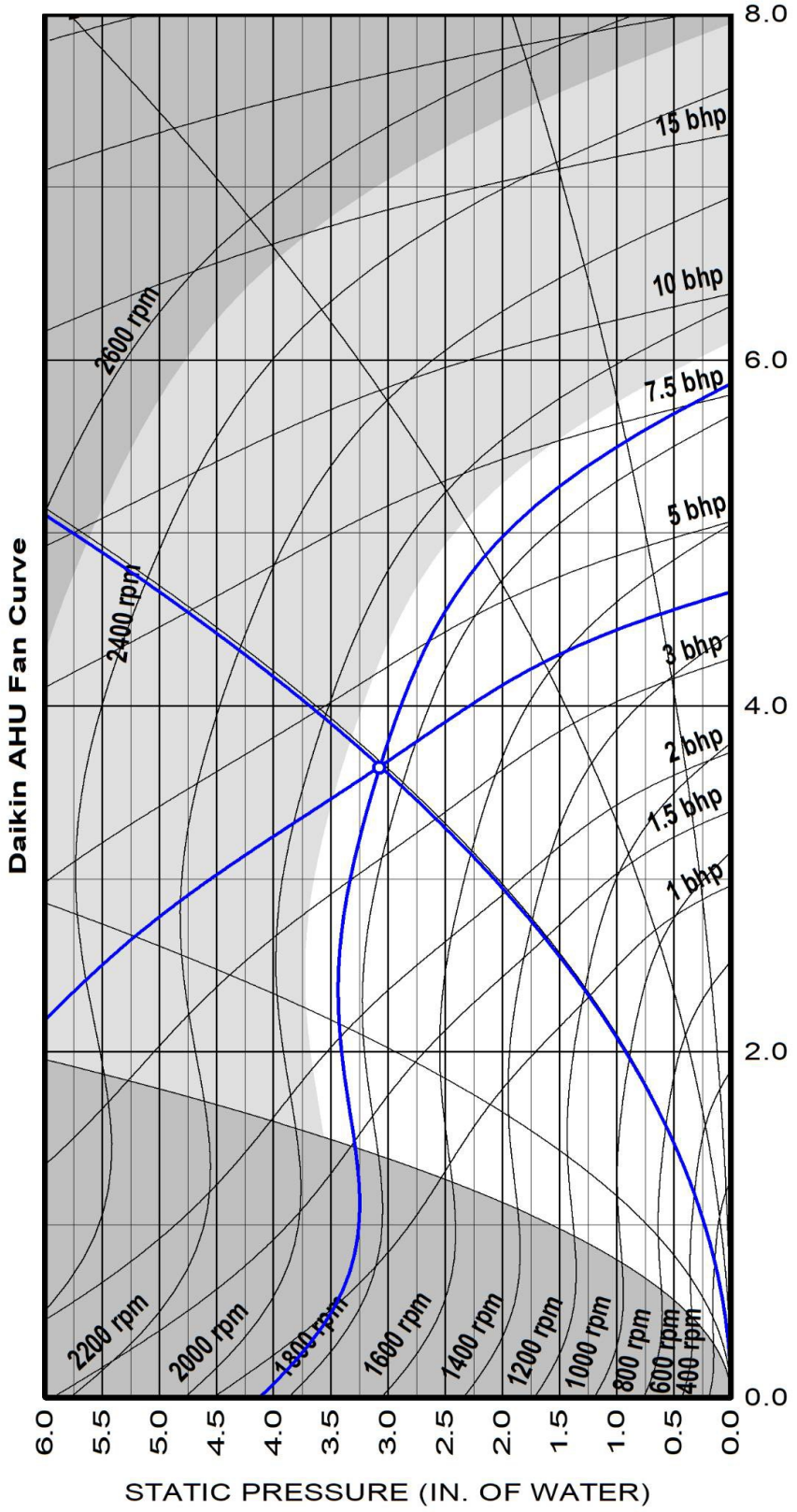

10.62" Forward Curved Supply Fan at Standard Conditions

Air volume	3650	cfm	Fan speed	1858	rpm
Total static	3.07	insWg	Max speed	2518	rpm
Fan Shaft Power	3.9	bhp	Efficiency	45.3	%
Fan Energy Index(FEI)	0.85				

Unit tagging	AHU-2 (Eiland) Final	Date	January-16-2026
Job name	Klein ISD Eiland ES AHU replacements	Time	23:47

Supply fan performance is certified in accordance with the Central Station Air-Handling Unit Certification Program, which is based on AHRI Standard 430.

Job Information	Technical Data Sheet
Job Name	Klein ISD Eiland ES AHU replacements
Date	January 16 2026
Submitted By	Salas O'Brien
Software Version	13.82
Unit Tag	AHU-3 (Eiland) Final

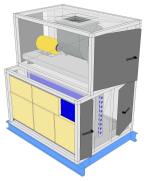

Unit Overview

Model Number	Supply					
	Air Volume cfm	Static Pressure		External Dimensions		
		External inWc	Total inWc	Height in	Width in	Length in
CAH012GDAM	5300	1.50	3.14	40*	66*	52**

**Not including base rails, coil connectors, drain connectors and control boxes.*

***Total lower deck length.*

Unit

Model Number:	CAH012GDAM		
Approval:	ETL Listed / ETL Listed to Canadian Safety Standards (ETL Label / ETLc Label)		
Outer Panel:	18 gauge G90 Galvanized Steel (unpainted)		
Liner:	24 gauge Galvanized Steel (unless noted per section)		
Insulation:	R-13 Injected Foam		
Unit Configuration:	Stacked / vertical	**Drive (Handling) Location:**	Left
Base:	6" formed channel	**Wall Thickness:**	2 in
Altitude:	0 ft	**Parts Warranty:**	Additional One Year, Two Year Total

Panel Filter

Component: 1 | Length: 12 in | Shipping Section: 1

Type	Efficiency	Nominal Face Velocity	Actual Face Velocity	Actual Face Area	Air Volume	Filter Loading
Pre Pleat	MERV 13	430 ft/min	440 ft/min	12.1 ft²	5300 cfm	Side

Air Pressure Drop				Number of Filters	Height	Width	Depth
Clean Air	Mean Air	Dirty Air	User Spec				
0.29 inWc	**0.65** inWc	1.00 inWc	N/A	1	20 in	24 in	2 in
				2	20 in	20 in	2 in
				2	12 in	24 in	2 in

Door

Location	Drive Side Door Width	Opp. Drv. Side Door Width	Opening
Both sides	8 in	8 in	Outward

Chilled Water Coil	Component: 2	Length: 40 in	Shipping Section: 1

Coil Model	Total Capacity	Sensible Capacity	Number of Coils	Number of Rows	Fins per Inch	Tube Diameter	Tube Spacing (Face x Row)
5WL0908B	212594 Btu/hr	137593 Btu/hr	1	8	9	0.625 in	1.50 in x 1.299 in

Coil Operating Weight	Coil Dry Weight
379 lb	276 lb

Air Volume	Air Temperature				Coil Air Pressure Drop	Finned Height	Finned Length	Face Area	Face Velocity
	Entering		Leaving						
	Dry Bulb	Wet Bulb	Dry Bulb	Wet Bulb					
5300 cfm	78.0 °F	67.0 °F	54.3 °F	54.0 °F	0.87 inWc	30 in	53 in	11.04 ft²	480 ft/min

Water						
Entering	Leaving	Flow Rate	Pressure Drop	Velocity	Fluid Volume	Fluid Weight
45.0 °F	57.5 °F	34.00 gpm	4.70 ftHd	2.40 ft/s	12.0 gal	103.00 lb

Connection [Data Per Coil]				Min. Fin Surface Temp.	Min. Tube Wall Surface Temp.	Fouling Factor
Type	Size	Location	Material			
Threaded	2.00 in	Drive side	Carbon steel	45.0 °F	45.0 °F	0.000

Material				Drain Pan	Drain Side
Fin	Tube	Header	Case		
Aluminum .0075 in	Copper .020 in	Copper	Stainless steel	Stainless steel	Drive side

AHRI 410 Certification

Certified in accordance with the AHRI Forced-Circulation Air-Cooling and Air-Heating Coils Certification Program which is based on AHRI Standard 410 within the Range of Standard Rating Conditions listed in Table 1 of the Standard. Certified units may be found in the AHRI Directory at www.ahridirectory.org

Door

Location	Drive Side Door Width	Opp. Drv. Side Door Width	Opening
Both sides	20 in	20 in	Outward

Supply Fan

Component: 3 | Length: 42 in | Shipping Section: 2

Fan Performance

Air Volume	Static Pressure			Fan Energy Index(FEI)	Total Input Power	Fan Shaft Power	Fan Wheel Speed		Outlet Velocity
	External	Total	Cabinet				Operating	Maximum	
5300 cfm	1.50 inWc	3.14 inWc	0.13 inWc	1.07	4.2 kW	4.52 BHP	1219 rpm	1725 rpm	2560 ft/min

Fan Data

Fan Type	Blade Type / Class	Quantity of Fans	Wheel Diameter	Number of Blades	Discharge	Motor Location
Centrifugal DWDI	Forward Curved / 2	1	15.00 in	N/A	Up blast CCW	To Side of Fan

Motor Data

Power	Electrical Supply	Speed	Efficiency	Enclosure	Frame Size	Supplier	Number of Poles	Lock Rotor Current	Full Load Current
7.5 HP	460/60/3 V/Hz/Phase	1750 rpm	Premium	TEFC	213 T frame	Generic	4	70.56 A	9.50 A

Fan Options

Shaft Grounding Kit:	Provided	**Isolator Type:**	Spring

Drive Package Data*

Fan Sheave	Motor Sheave	Belt	Number of Belts	Actual Drive S.F.	Bearing Type
2BK57H	2BK36H	BX31	2	1.12	Standard - L50 (200K)

**Daikin Applied reserves the right to provide a different but equivalent drive package*

VFD/Starter/Disconnect Data

Selection Type:	External J-Box	**Vendor:**	Factory Standard
Voltage:	460 V	**Height x Width x Depth:**	6.00 in x 6.00 in x 4.00 in
Mounting:	Door Side	**Enclosure:**	NEMA 1

Door

Location	Drive Side Door Width	Opp. Drv. Side Door Width	Opening
Both sides	26 in	30 in	Outward

Unit Sound Power (dB)

Type	63 Hz	125 Hz	250 Hz	500 Hz	1000 Hz	2000 Hz	4000 Hz	8000 Hz
Radiated:	75	77	69	64	61	51	46	51
Unit Discharge:	85	87	87	85	83	79	79	74
Unit Return:	78	78	77	75	73	69	67	59

Shipping Section Details

Section	Length in	Weight lb	Corner Weights (lb)				Center of Gravity (in)		
			P1	P2	P3	P4	XX	YY	ZZ
1	52	1040	260	277	260	243	25	34	22
2	42	802	250	174	151	227	20	27	17
Entire Unit	**52** *Lower level only*	**1842**	**n/a**	**n/a**	**n/a**	**n/a**	**n/a**	**n/a**	**n/a**

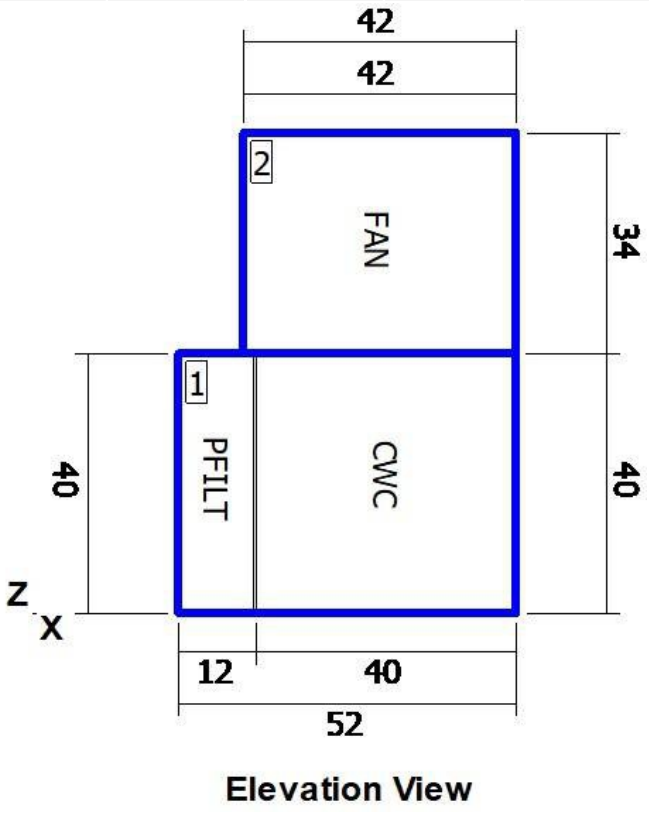

Elevation View

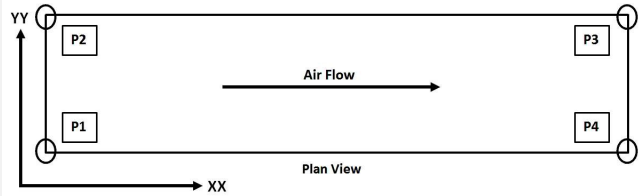

NOTE: Special components aren't included in the corner weights and center of gravity data.

NOTE: Shipping weights listed do not include weight of water (listed in coil section(s) above.

Shipping Protection	None

Supply Static Pressure Drop

Component	Option	Static Pressure Drop
Panel Filter	Panel Filter	0.65 insWg
Chilled Water coil	Chilled Water coil	0.87 insWg
Supply Fan	Cabinet	0.13 insWg
External Static	External Static	1.50 insWg
Total Supply Fan Static		3.14 insWg

Minimum Recommended Drain Pan Trap Dimensions

Shipping Section	Component	H
1	Chilled Water coil	3.54

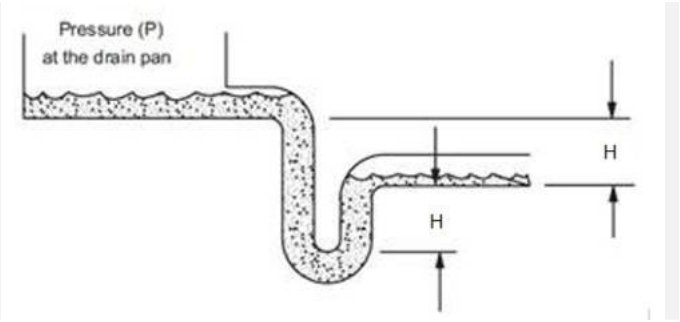

Dimensions provided as a courtesy and are recommended minimums only. Daikin is not responsible for supplying or designing drain pan traps and is not responsible for any damage caused by incorrect trap heights. The dimensions listed above should be reviewed and approved by a licensed plumbing professional.

AHRI Certification

Certified by the AHRI Central Station Air-Handling Unit (AHU) Certification Program, which is based on AHRI Standard 430/431. AHRI certified units are subject to rigorous and continuous testing, have performance ratings independently measured and are third-party verified. Certified units may be found in the AHRI Directory at www.ahridirectory.org.

Notes

Standard
1. As a standalone component, unit meets or exceeds requirements of ASHRAE 90.1 - 2007. The approving authority is responsible for compliance of multi - component building systems.

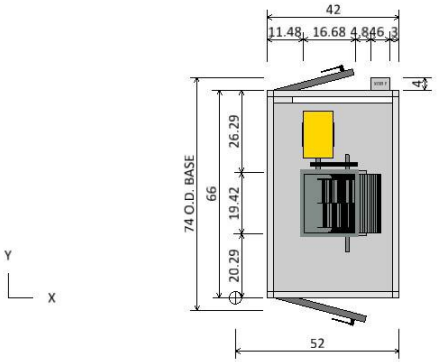

TOP DECK PLAN VIEW

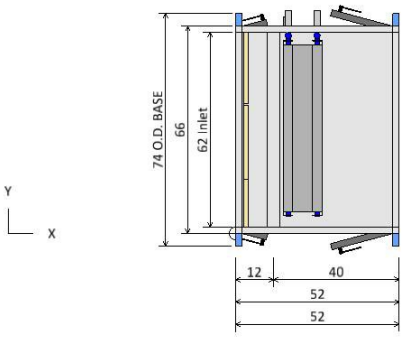

BOTTOM DECK PLAN VIEW

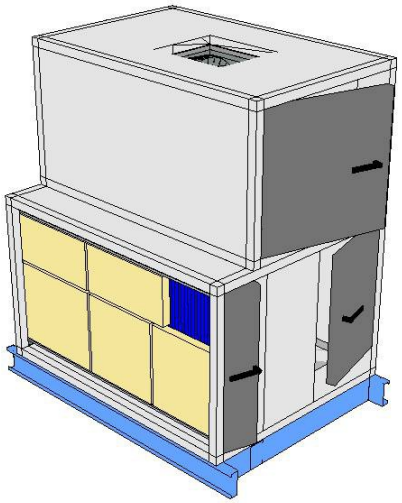

ISOMETRIC VIEW

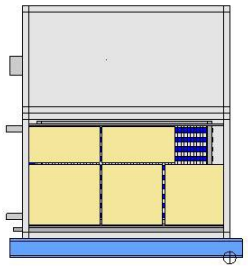

FRONT END VIEW

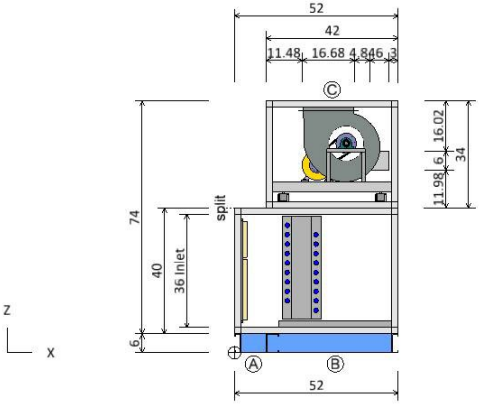

ELEVATION VIEW

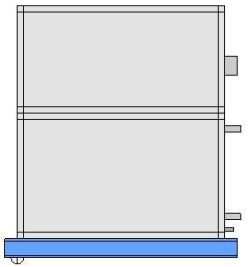

REAR END VIEW

Product Drawing	Unit Tag: AHU-3 (Eiland) Final			Sales Office: HTS Texas		
Product: Vision Air Handler	Project Name: Klein ISD Eiland ES AHU replacements			Sales Engineer:		
Model: CAH012GDAM	Jan. 16, 2026	Ver/Rev:	Sheet: 1 of 1	Scale: NTS	Tolerance: +/-0.25"	Dwg Units: in

DAIKIN
13600 Industrial Park Blvd, Minneapolis, MN 55441
www.DaikinApplied.com Software Version: 13.91

All opening dimensions have a 1" mounting flange along the inner edge. The actual airflow area of the opening is 2" smaller in each dimension.

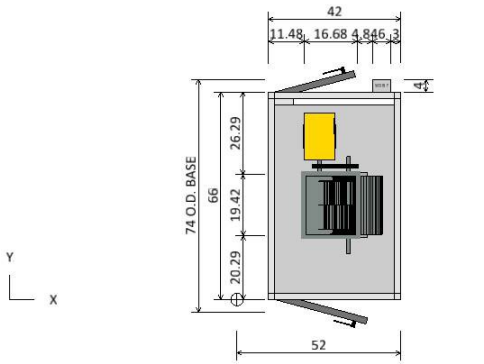

TOP DECK PLAN VIEW

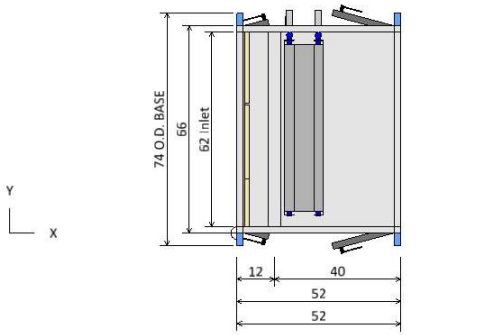

BOTTOM DECK PLAN VIEW

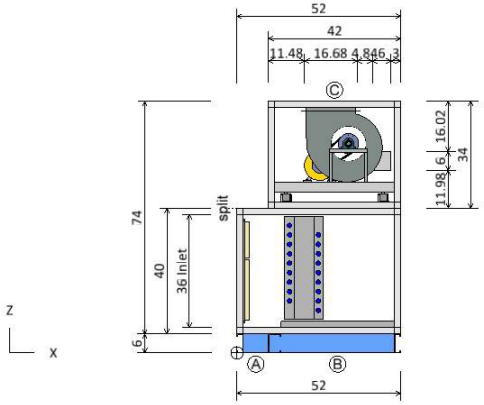

ELEVATION VIEW

Component Key		
Ⓐ	Panel Filter	
	Filter Type:	PrePleat (MERV 13)
	Right Door (WxH):	8 ins x 36 ins
	Left Door (WxH):	8 ins x 36 ins
Ⓑ	Chilled Water coil	
	Coil Model:	5WL0908B
	Total Capacity:	212594.0 Btu/hr
	Right Door (WxH):	20 ins x 30 ins
	Left Door (WxH):	20 ins x 30 ins
Ⓒ	Supply Fan	
	Fan Type:	Centrifugal DWDI
	Fan Size (Class):	15 (2)
	Air Flowrate:	5300.0 cfm
	T.S.P:	3.1 insWg
	Motor Power:	7.5 HP
	Right Door (WxH):	30 ins x 30 ins
	Left Door (WxH):	26 ins x 30 ins

Product Drawing	Unit Tag: AHU-3 (Eiland) Final			Sales Office: HTS Texas		
Product: Vision Air Handler	Project Name: Klein ISD Eiland ES AHU replacements			Sales Engineer:		
Model: CAH012GDAM	Jan. 16, 2026	Ver/Rev:	Sheet: 1 of 1	Scale: NTS	Tolerance: +/-0.25"	Dwg Units: in

DAIKIN
13600 Industrial Park Blvd, Minneapolis, MN 55441
www.DaikinApplied.com Software Version: 13.91

All opening dimensions have a 1" mounting flange along the inner edge. The actual airflow area of the opening is 2" smaller in each dimension.

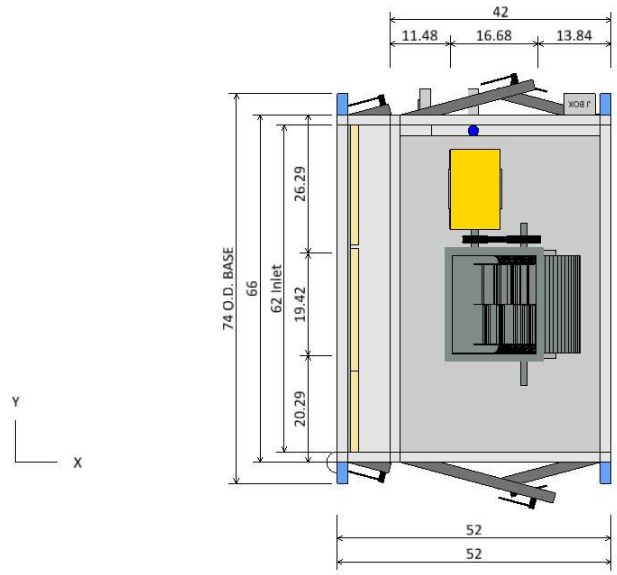

PLAN VIEW

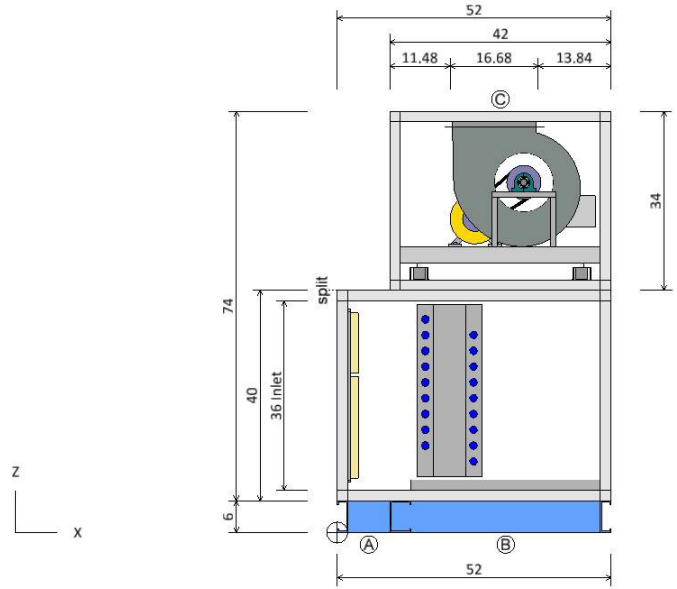

ELEVATION VIEW

Component Key

	Type	X	Y	Z	Wid	Hgt
Ⓐ	Panel Filter Opening	0.00	2.00	8.00	62.00	36.00
Ⓒ	Supply Fan Fan Discharge	29.84	26.29	80.00	19.42	16.68

Note: Dimensions are measured from the origin point.
Note: Openings with or without dampers are recessed into the unit by approximately 1.75 in.

Opening/Damper Connections	Unit Tag: AHU-3 (Eiland) Final			Sales Office: HTS Texas		
Product: Vision Air Handler	Project Name: Klein ISD Eiland ES AHU replacements			Sales Engineer:		
Model: CAH012GDAM	Jan. 16, 2026	Ver/Rev:	Sheet: 1 of 1	Scale: NTS	Tolerance: +/-0.25"	Dwg Units: in

DAIKIN
13600 Industrial Park Blvd, Minneapolis, MN 55441
www.DaikinApplied.com Software Version: 13.91

All opening dimensions have a 1" mounting flange along the inner edge. The actual airflow area of the opening is 2" smaller in each dimension.

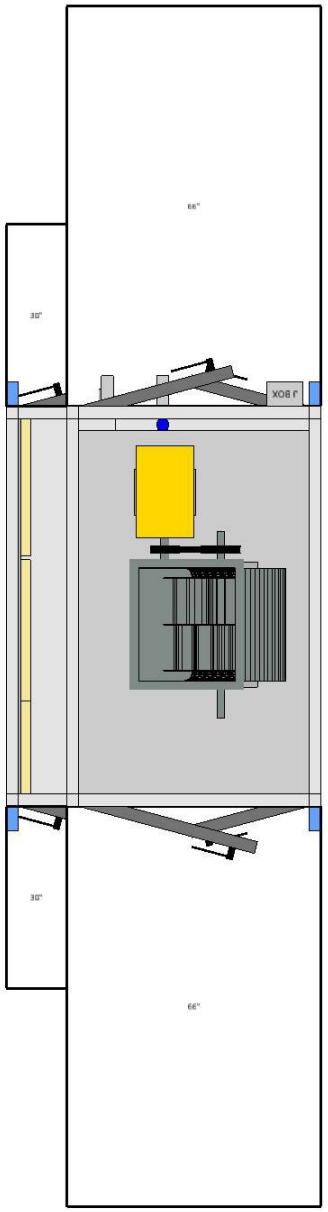

PLAN VIEW

Notes
Check local electrical component service clearance codes for specific distances. Access is only required on one side of the unit.

Service Clearance View	Unit Tag: AHU-3 (Eiland) Final			Sales Office: HTS Texas		
Product: Vision Air Handler	Project Name: Klein ISD Eiland ES AHU replacements			Sales Engineer:		
Model: CAH012GDAM	Jan. 16, 2026	Ver/Rev:	Sheet: 1 of 1	Scale: NTS	Tolerance: +/-0.25"	Dwg Units: in

DAIKIN
13600 Industrial Park Blvd, Minneapolis, MN 55441
www.DaikinApplied.com Software Version: 13.91

All opening dimensions have a 1" mounting flange along the inner edge. The actual airflow area of the opening is 2" smaller in each dimension.

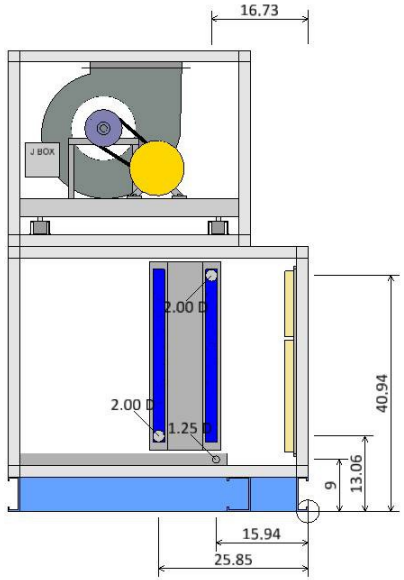

LEFT ELEVATION VIEW

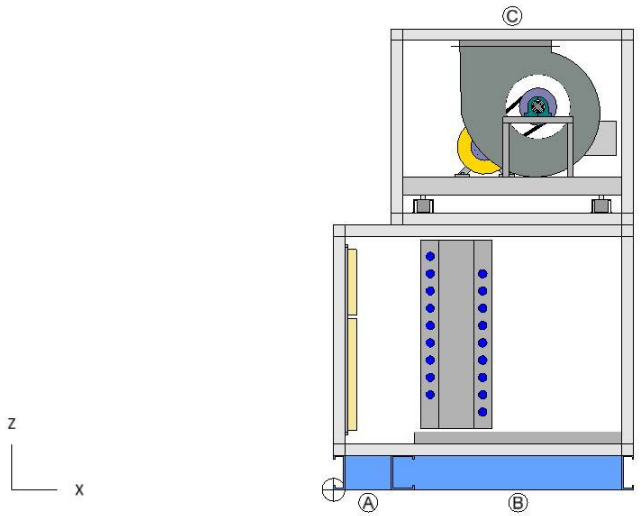

RIGHT ELEVATION VIEW

Coil and Drain Connections

	Type	X	Y	Z	Diam
Ⓑ	Chilled Water coil				
	Condensate drain conn:	15.94	68.90	9.00	1.25
	Cold water inlet:	25.85	73.00*	13.06	2.00
	Cold water outlet:	16.73	73.00*	40.94	2.00

Notes:
Dimensions are measured from the origin point.
* value varies +/- 1 in.

Coil and Drain Connections	Unit Tag: AHU-3 (Eiland) Final			Sales Office: HTS Texas		
Product: Vision Air Handler	Project Name: Klein ISD Eiland ES AHU replacements			Sales Engineer:		
Model: CAH012GDAM	Jan. 16, 2026	Ver/Rev:	Sheet: 1 of 1	Scale: NTS	Tolerance: +/-0.25"	Dwg Units: in

DAIKIN
13600 Industrial Park Blvd, Minneapolis, MN 55441
www.DaikinApplied.com Software Version: 13.91

All opening dimensions have a 1" mounting flange along the inner edge. The actual airflow area of the opening is 2" smaller in each dimension.

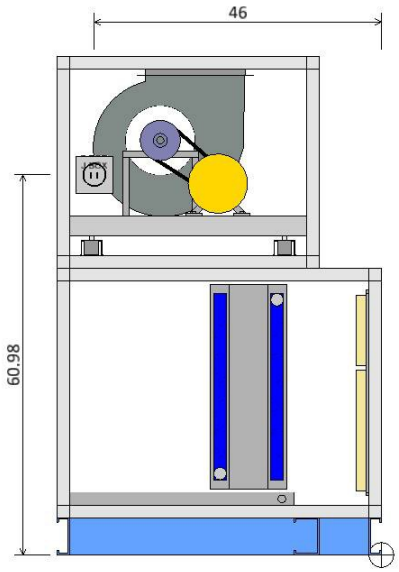

LEFT ELEVATION VIEW

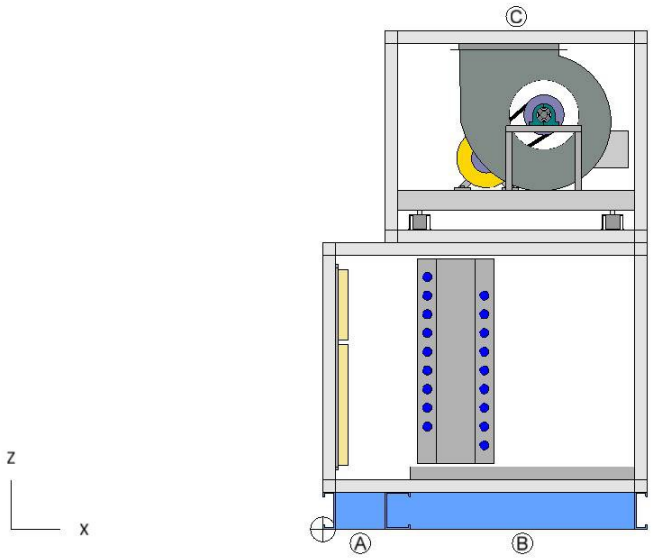

RIGHT ELEVATION VIEW

Component Key

	Type	X	Y	Z	Volts	Phase
Ⓒ	Supply Fan Fan	46.00	66.00	60.98	460	3

Note: Dimensions are measured from the origin point.

Electrical Connections	Unit Tag: AHU-3 (Eiland) Final			Sales Office: HTS Texas		
Product: Vision Air Handler	Project Name: Klein ISD Eiland ES AHU replacements			Sales Engineer:		
Model: CAH012GDAM	Jan. 16, 2026	Ver/Rev:	Sheet: 1 of 1	Scale: NTS	Tolerance: +/-0.25"	Dwg Units: in

DAIKIN
13600 Industrial Park Blvd, Minneapolis, MN 55441
www.DaikinApplied.com Software Version: 13.91

All opening dimensions have a 1" mounting flange along the inner edge. The actual airflow area of the opening is 2" smaller in each dimension.

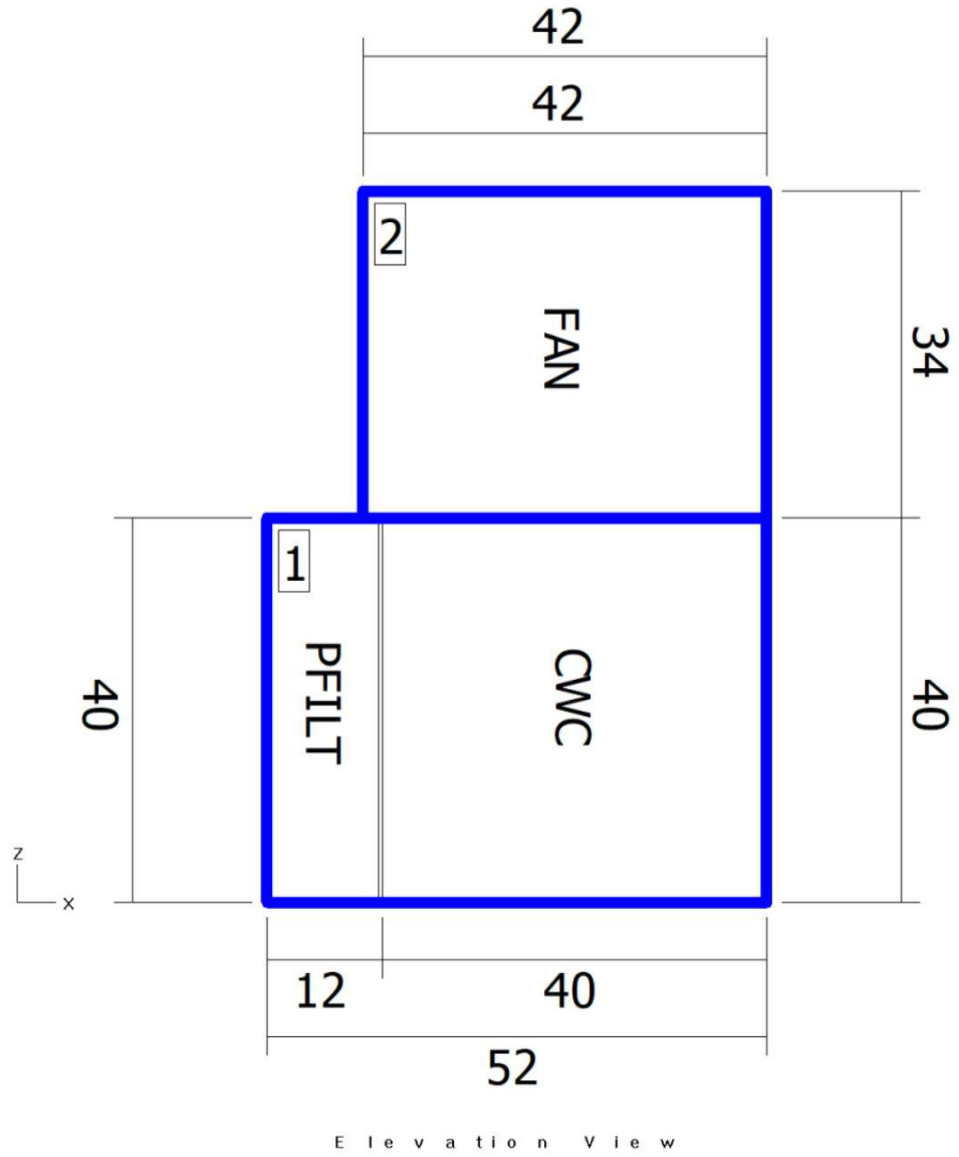

Elevation View

Shipping Sections

Section	Weight (lb)	X	Y	Z
Section 1	1040.28	52	66	40
Section 2	801.96	42	66	34
Total Unit	1842.25	52	66	74

Note: Base rails, curb ready base, coil connectors, drain connectors, and control boxes not included in height X, Y, Z dimensions.
Shipping section may be 2" longer in air flow direction due to internal splice joint.

Shipping Sections	Unit Tag: AHU-3 (Eiland) Final			Sales Office: HTS Texas		
Product: Vision Air Handler	Project Name: Klein ISD Eiland ES AHU replacements			Sales Engineer:		
Model: CAH012GDAM	Jan. 16, 2026	Ver/Rev:	Sheet: 1 of 1	Scale: NTS	Tolerance: +/-0.25"	Dwg Units: in

DAIKIN
13600 Industrial Park Blvd, Minneapolis, MN 55441
www.DaikinApplied.com Software Version: 13.91

All opening dimensions have a 1" mounting flange along the inner edge. The actual airflow area of the opening is 2" smaller in each dimension.

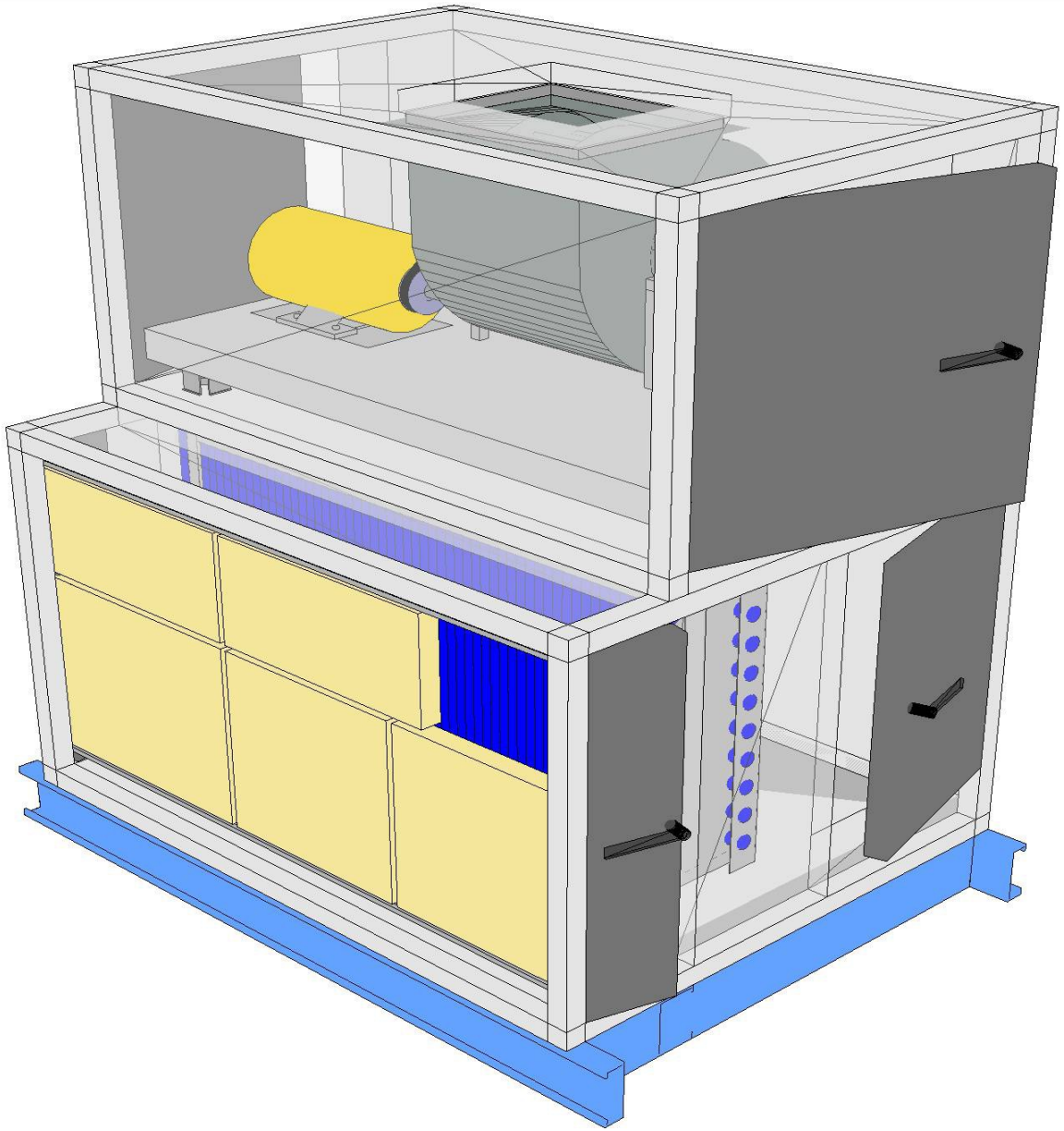

Product Drawing	Unit Tag: AHU-3 (Eiland) Final			Sales Office: HTS Texas			DAIKIN
Product: Vision Air Handler	Project Name: Klein ISD Eiland ES AHU replacements			Sales Engineer:			13600 Industrial Park Blvd, Minneapolis, MN 55441
Model: CAH012GDAM	Jan. 16, 2026	Ver/Rev:	Sheet: 1 of 1	Scale: NTS	Tolerance: +/-0.25"	Dwg Units: in	www.DaikinApplied.com Software Version: 13.91

All opening dimensions have a 1" mounting flange along the inner edge. The actual airflow area of the opening is 2" smaller in each dimension.

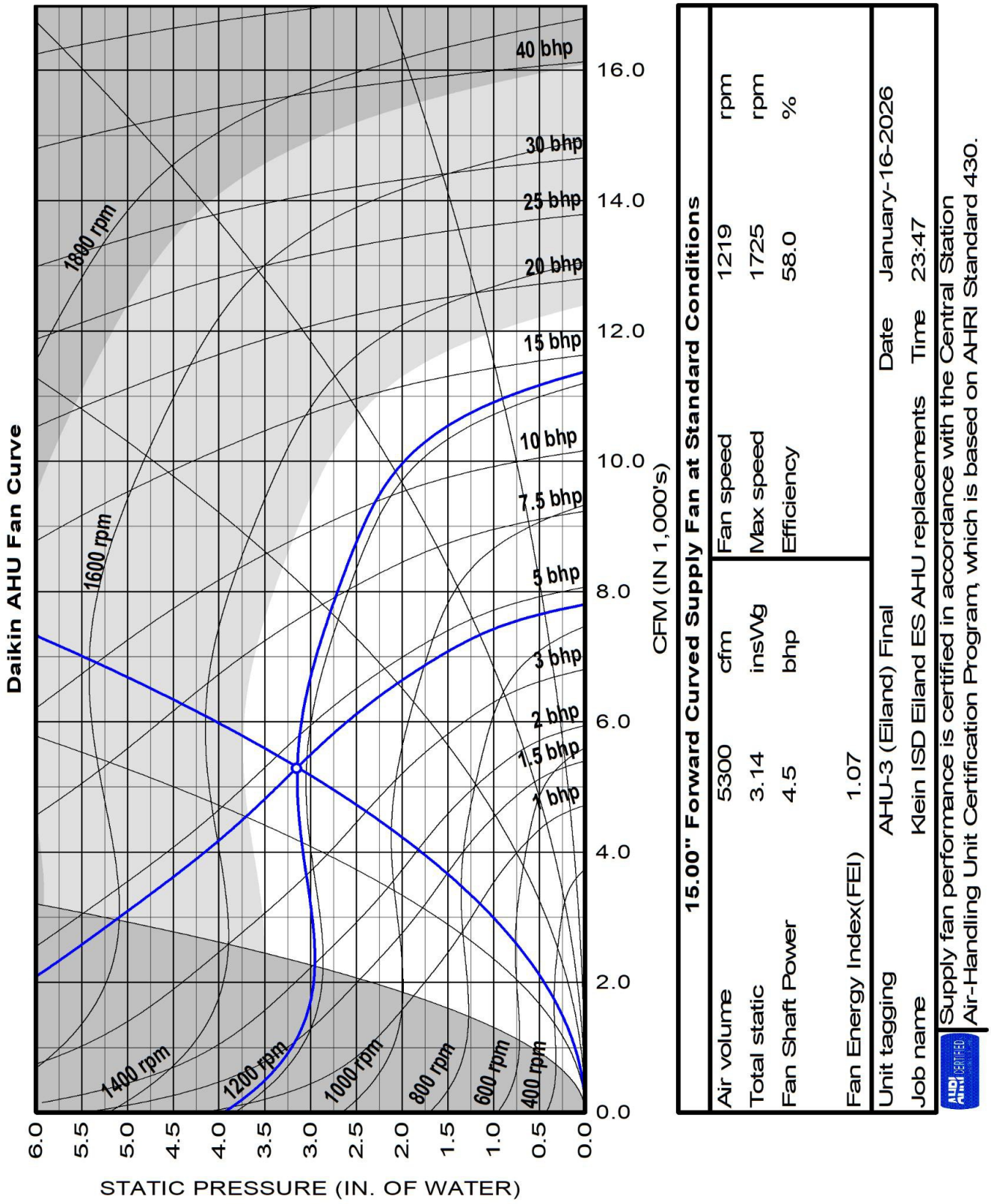
Daikin AHU Fan Curve
STATIC PRESSURE (IN. OF WATER)
CFM (IN 1,000's)
1800 rpm
1600 rpm
1400 rpm
1200 rpm
1000 rpm
800 rpm
600 rpm
400 rpm
40 bhp
30 bhp
25 bhp
20 bhp
15 bhp
10 bhp
7.5 bhp
5 bhp
3 bhp
2 bhp
1.5 bhp
1 bhp
15.00" Forward Curved Supply Fan at Standard Conditions
Air volume 5300 cfm
Total static 3.14 insWg
Fan Shaft Power 4.5 bhp
Fan Energy Index(FEI) 1.07
Fan speed 1219 rpm
Max speed 1725 rpm
Efficiency 58.0 %
Unit tagging AHU-3 (Eiland) Final
Date January-16-2026
Job name Klein ISD Eiland ES AHU replacements
Time 23:47
Supply fan performance is certified in accordance with the Central Station Air-Handling Unit Certification Program, which is based on AHRI Standard 430.

Job Information	Technical Data Sheet
Job Name	Klein ISD Eiland ES AHU replacements
Date	January 16 2026
Submitted By	Salas O'Brien
Software Version	13.91
Unit Tag	AHU-8 (Eiland) Final

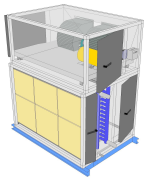

Unit Overview

Model Number	Supply					
	Air Volume cfm	Static Pressure		External Dimensions		
		External inWc	Total inWc	Height in	Width in	Length in
CAH019GDBM	8750	1.50	3.11	52*	74*	54**

**Not including base rails, coil connectors, drain connectors and control boxes.*

***Total lower deck length.*

Unit

Model Number:	CAH019GDBM		
Approval:	ETL Listed / ETL Listed to Canadian Safety Standards (ETL Label / ETLc Label)		
Outer Panel:	18 gauge G90 Galvanized Steel (unpainted)		
Liner:	24 gauge Galvanized Steel (unless noted per section)		
Insulation:	R-13 Injected Foam		
Unit Configuration:	Stacked / vertical	**Drive (Handling) Location:**	Right
Base:	4" formed channel	**Wall Thickness:**	2 in
Altitude:	0 ft	**Parts Warranty:**	Additional One Year, Two Year Total

Panel Filter

Component: 1 | Length: 12 in | Shipping Section: 1

Type	Efficiency	Nominal Face Velocity	Actual Face Velocity	Actual Face Area	Air Volume	Filter Loading
Pre Pleat	MERV 13	398 ft/min	420 ft/min	20.8 ft²	8750 cfm	Side

Air Pressure Drop				Number of Filters	Height	Width	Depth
Clean Air	Mean Air	Dirty Air	User Spec				
0.28 inWc	**0.64** inWc	1.00 inWc	N/A	3	24 in	24 in	2 in
				3	20 in	24 in	2 in

Door

Location	Drive Side Door Width	Opp. Drv. Side Door Width	Opening
Both sides	8 in	8 in	Outward

Chilled Water Coil	Component: 2	Length: 42 in	Shipping Section: 1

Coil Model	Total Capacity	Sensible Capacity	Number of Coils	Number of Rows	Fins per Inch	Tube Diameter	Tube Spacing (Face x Row)
5WL0808B	345784 Btu/hr	223869 Btu/hr	1	8	8	0.625 in	1.50 in x 1.299 in

Coil Operating Weight	Coil Dry Weight
565 lb	403 lb

Air Volume	Air Temperature				Coil Air Pressure Drop	Finned Height	Finned Length	Face Area	Face Velocity
	Entering		Leaving						
	Dry Bulb	Wet Bulb	Dry Bulb	Wet Bulb					
8750 cfm	78.0 °F	67.0 °F	54.6 °F	54.2 °F	0.84 inWc	42 in	61 in	17.79 ft²	492 ft/min

Water

Entering	Leaving	Flow Rate	Pressure Drop	Velocity	Fluid Volume	Fluid Weight
45.0 °F	57.3 °F	56.00 gpm	7.10 ftHd	2.90 ft/s	19.0 gal	162.00 lb

Connection [Data Per Coil]				Min. Fin Surface Temp.	Min. Tube Wall Surface Temp.	Fouling Factor
Type	Size	Location	Material			
Threaded	2.50 in	Drive side	Carbon steel	45.0 °F	45.0 °F	0.000

Material				Drain Pan	Drain Side
Fin	Tube	Header	Case		
Aluminum .0075 in	Copper .020 in	Copper	Stainless steel	Stainless steel	Drive side

AHRI 410 Certification

Certified in accordance with the AHRI Forced-Circulation Air-Cooling and Air-Heating Coils Certification Program which is based on AHRI Standard 410 within the Range of Standard Rating Conditions listed in Table 1 of the Standard. Certified units may be found in the AHRI Directory at www.ahridirectory.org

Door

Location	Drive Side Door Width	Opp. Drv. Side Door Width	Opening
Both sides	22 in	22 in	Outward

Supply Fan

Component: 3 | Length: 52 in | Shipping Section: 2

Fan Performance

Air Volume	Static Pressure			Fan Energy Index(FEI)	Total Input Power	Fan Shaft Power	Fan Wheel Speed		Outlet Velocity
	External	Total	Cabinet				Operating	Maximum	
8750 cfm	1.50 inWc	3.11 inWc	0.13 inWc	0.89	8.0 kW	8.72 BHP	1612 rpm	2000 rpm	2007 ft/min

Fan Data

Fan Type	Blade Type / Class	Quantity of Fans	Wheel Diameter	Number of Blades	Discharge	Motor Location
Centrifugal - Twin	Forward Curve / 1	1	12.62 in	N/A	Top horizontal	Behind Fan

Motor Data

Power	Electrical Supply	Speed	Efficiency	Enclosure	Frame Size	Supplier	Number of Poles	Lock Rotor Current	Full Load Current
10.0 HP	460/60/3 V/Hz/Phase	1750 rpm	Premium	TEFC	215 T frame	Generic	4	106.62 A	12.50 A

Fan Options

Seismic Restraint:	With snubbers	**Shaft Grounding Kit:**	Provided
Isolator Type:	Spring		

Drive Package Data*

Fan Sheave	Motor Sheave	Belt	Number of Belts	Actual Drive S.F.	Bearing Type
2B5V50	2BK52H	BX53	2	1.34	Standard - L50 (150K)

**Daikin Applied reserves the right to provide a different but equivalent drive package*

VFD/Starter/Disconnect Data

Selection Type:	External J-Box	**Vendor:**	Factory Standard
Voltage:	460 V	**Height x Width x Depth:**	6.00 in x 6.00 in x 4.00 in
Mounting:	Door Side	**Enclosure:**	NEMA 1

Door

Location	Drive Side Door Width	Opp. Drv. Side Door Width	Opening
Both sides	30 in	30 in	Outward

Unit Sound Power (dB)

Type	63 Hz	125 Hz	250 Hz	500 Hz	1000 Hz	2000 Hz	4000 Hz	8000 Hz
Radiated:	80	85	72	66	70	60	46	51
Unit Discharge:	90	95	90	87	92	88	83	82
Unit Return:	83	86	80	77	82	78	71	67

Shipping Section Details

Section	Length in	Weight lb	Corner Weights (lb)				Center of Gravity (in)		
			P1	P2	P3	P4	XX	YY	ZZ
1	54	1337	361	338	308	330	26	36	25
2	52	1053	286	229	238	295	26	33	17
Entire Unit	**54** *Lower level only*	**2390**	**n/a**	**n/a**	**n/a**	**n/a**	**n/a**	**n/a**	**n/a**

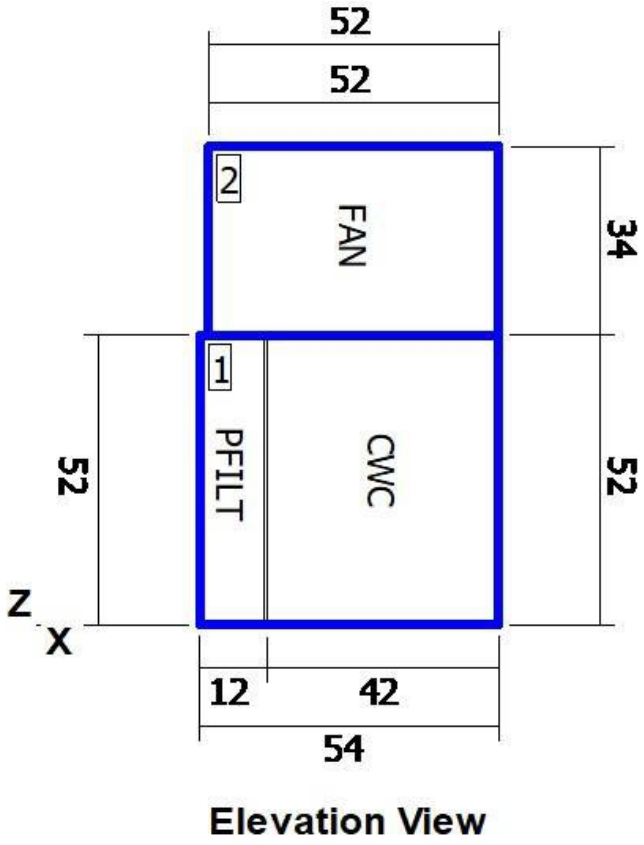

Elevation View

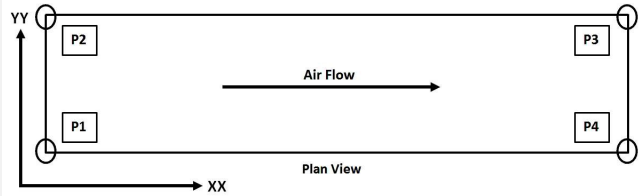

NOTE: Special components aren't included in the corner weights and center of gravity data.

NOTE: Shipping weights listed do not include weight of water (listed in coil section(s) above.

Shipping Protection	None

Supply Static Pressure Drop

Component	Option	Static Pressure Drop
Panel Filter	Panel Filter	0.64 insWg
Chilled Water coil	Chilled Water coil	0.84 insWg
Supply Fan	Cabinet	0.13 insWg
External Static	External Static	1.50 insWg
Total Supply Fan Static		3.11 insWg

Minimum Recommended Drain Pan Trap Dimensions

Shipping Section	Component	H
1	Chilled Water coil	3.46

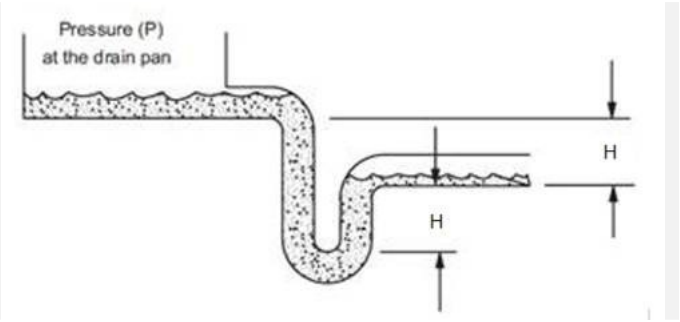

Dimensions provided as a courtesy and are recommended minimums only. Daikin is not responsible for supplying or designing drain pan traps and is not responsible for any damage caused by incorrect trap heights. The dimensions listed above should be reviewed and approved by a licensed plumbing professional.

AHRI Certification

Certified by the AHRI Central Station Air-Handling Unit (AHU) Certification Program, which is based on AHRI Standard 430/431. AHRI certified units are subject to rigorous and continuous testing, have performance ratings independently measured and are third-party verified. Certified units may be found in the AHRI Directory at www.ahridirectory.org.

Notes

Standard
1. As a standalone component, unit meets or exceeds requirements of ASHRAE 90.1 - 2007. The approving authority is responsible for compliance of multi - component building systems.

BQZQ3P

Klein ISD Eiland ES AHU re

51

1/16/2026

AHU-8 (Eiland) Final

Drawing

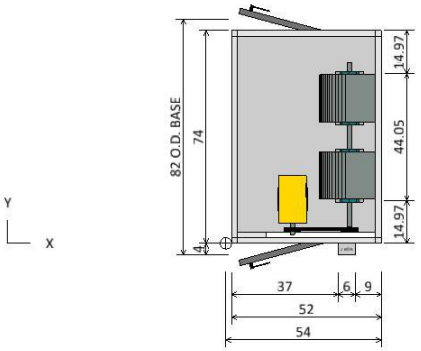

TOP DECK PLAN VIEW

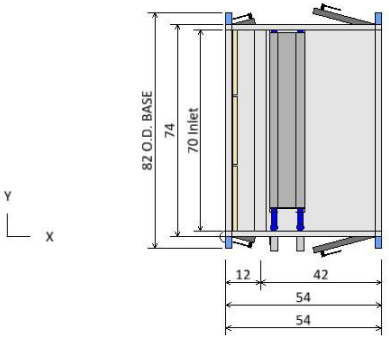

BOTTOM DECK PLAN VIEW

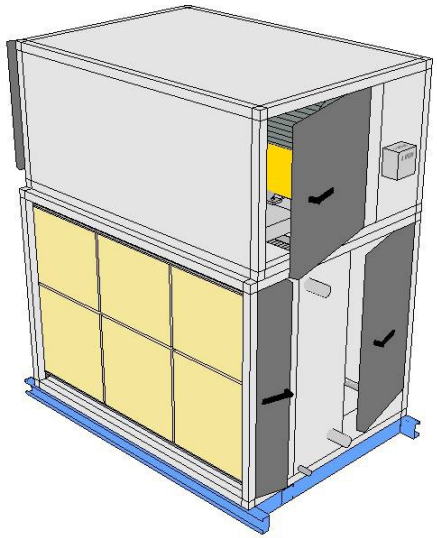

ISOMETRIC VIEW

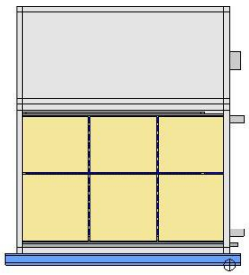

FRONT END VIEW

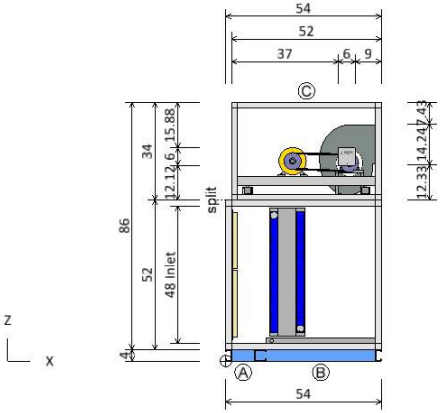

ELEVATION VIEW

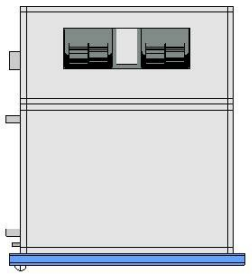

REAR END VIEW

Product Drawing	Unit Tag: AHU-8 (Eiland) Final			Sales Office: HTS Texas		
Product: Vision Air Handler	Project Name: Klein ISD Eiland ES AHU replacements			Sales Engineer:		
Model: CAH019GDBM	Jan. 16, 2026	Ver/Rev:	Sheet: 1 of 1	Scale: NTS	Tolerance: +/-0.25"	Dwg Units: in

DAIKIN

13600 Industrial Park Blvd, Minneapolis, MN 55441

www.DaikinApplied.com Software Version: 13.91

All opening dimensions have a 1" mounting flange along the inner edge. The actual airflow area of the opening is 2" smaller in each dimension.

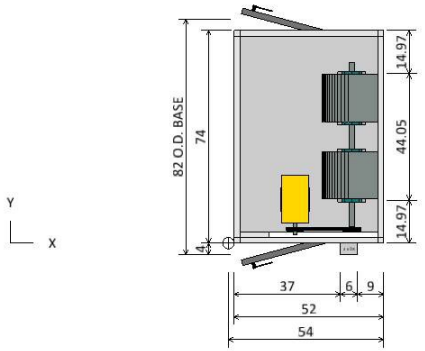

TOP DECK PLAN VIEW

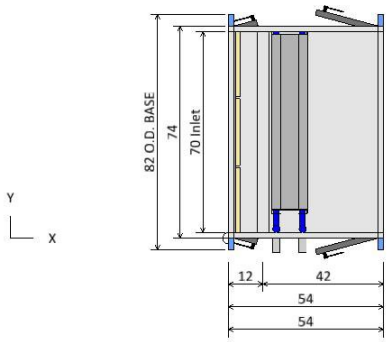

BOTTOM DECK PLAN VIEW

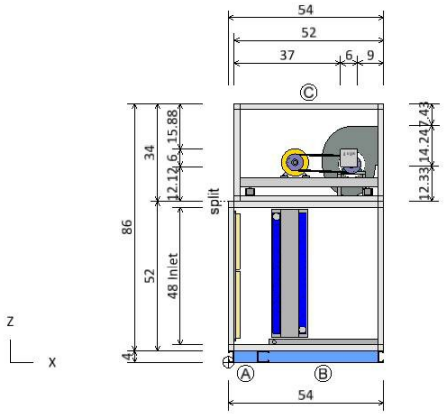

ELEVATION VIEW

Component Key		
Ⓐ	Panel Filter	
	Filter Type:	PrePleat (MERV 13)
	Right Door (WxH):	8 ins x 48 ins
	Left Door (WxH):	8 ins x 48 ins
Ⓑ	Chilled Water coil	
	Coil Model:	5WL0808B
	Total Capacity:	345784.0 Btu/hr
	Right Door (WxH):	22 ins x 42 ins
	Left Door (WxH):	22 ins x 42 ins
Ⓒ	Supply Fan	
	Fan Type:	Centrifugal - Twin
	Fan Size (Class):	12 (1)
	Air Flowrate:	8750.0 cfm
	T.S.P:	3.1 insWg
	Motor Power:	10.0 HP
	Right Door (WxH):	30 ins x 30 ins
	Left Door (WxH):	30 ins x 30 ins

Product Drawing	Unit Tag: AHU-8 (Eiland) Final			Sales Office: HTS Texas		
Product: Vision Air Handler	Project Name: Klein ISD Eiland ES AHU replacements			Sales Engineer:		
Model: CAH019GDBM	Jan. 16, 2026	Ver/Rev:	Sheet: 1 of 1	Scale: NTS	Tolerance: +/-0.25"	Dwg Units: in

DAIKIN
13600 Industrial Park Blvd, Minneapolis, MN 55441
www.DaikinApplied.com Software Version: 13.91

All opening dimensions have a 1" mounting flange along the inner edge. The actual airflow area of the opening is 2" smaller in each dimension.

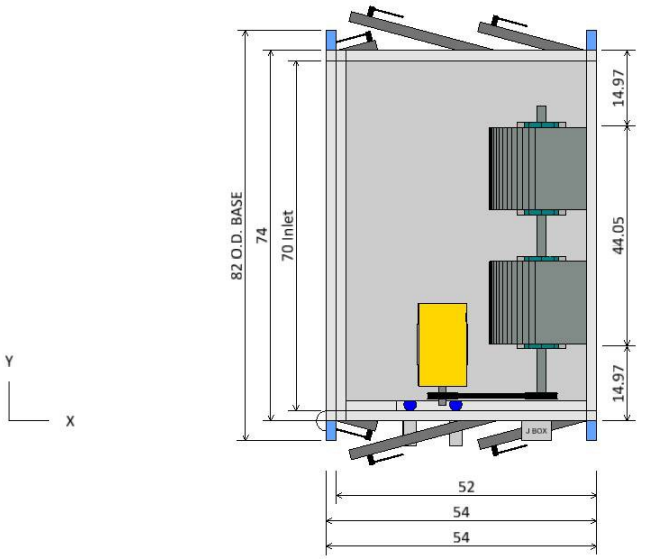

PLAN VIEW

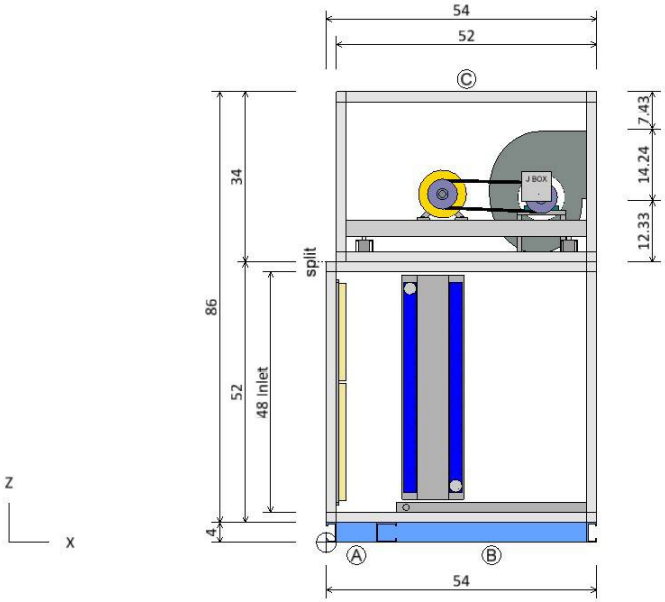

ELEVATION VIEW

Component Key

	Type	X	Y	Z	Wid	Hgt
Ⓐ	Panel Filter Opening	0.00	2.00	6.00	70.00	48.00
Ⓒ	Supply Fan Fan Discharge	54.00	24.98	68.33	44.05	14.24

Note: Dimensions are measured from the origin point.
Note: Openings with or without dampers are recessed into the unit by approximately 1.75 in.

Opening/Damper Connections	Unit Tag: AHU-8 (Eiland) Final			Sales Office: HTS Texas		
Product: Vision Air Handler	Project Name: Klein ISD Eiland ES AHU replacements			Sales Engineer:		
Model: CAH019GDBM	Jan. 16, 2026	Ver/Rev:	Sheet: 1 of 1	Scale: NTS	Tolerance: +/-0.25"	Dwg Units: in

DAIKIN
13600 Industrial Park Blvd, Minneapolis, MN 55441
www.DaikinApplied.com Software Version: 13.91

All opening dimensions have a 1" mounting flange along the inner edge. The actual airflow area of the opening is 2" smaller in each dimension.

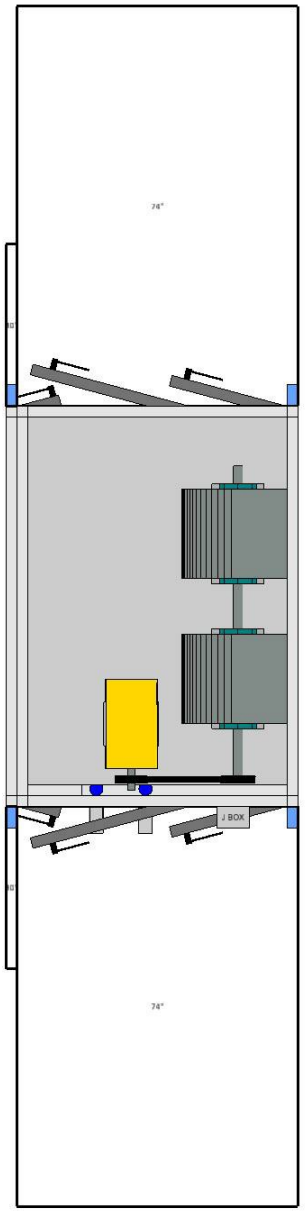

PLAN VIEW

Notes
Check local electrical component service clearance codes for specific distances. Access is only required on one side of the unit.

Service Clearance View	Unit Tag: AHU-8 (Eiland) Final			Sales Office: HTS Texas		
Product: Vision Air Handler	Project Name: Klein ISD Eiland ES AHU replacements			Sales Engineer:		
Model: CAH019GDBM	Jan. 16, 2026	Ver/Rev:	Sheet: 1 of 1	Scale: NTS	Tolerance: +/-0.25"	Dwg Units: in

DAIKIN
13600 Industrial Park Blvd, Minneapolis, MN 55441
www.DaikinApplied.com Software Version: 13.91

All opening dimensions have a 1" mounting flange along the inner edge. The actual airflow area of the opening is 2" smaller in each dimension.

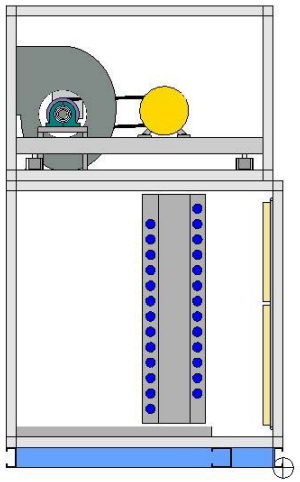

LEFT ELEVATION VIEW

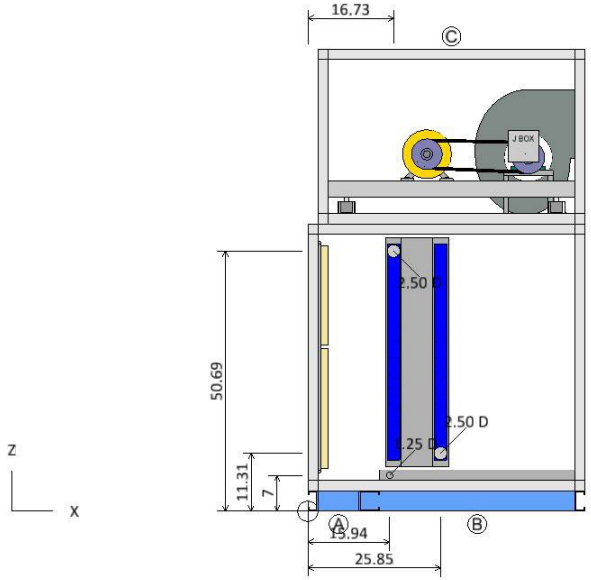

RIGHT ELEVATION VIEW

Coil and Drain Connections

	Type	X	Y	Z	Diam
Ⓑ	Chilled Water coil Condensate drain conn:	15.94	-2.90	7.00	1.25
	Cold water inlet:	25.85	-7.00*	11.31	2.50
	Cold water outlet:	16.73	-7.00*	50.69	2.50

Notes:
Dimensions are measured from the origin point.
* value varies +/- 1 in.

Coil and Drain Connections	Unit Tag: AHU-8 (Eiland) Final			Sales Office: HTS Texas		
Product: Vision Air Handler	Project Name: Klein ISD Eiland ES AHU replacements			Sales Engineer:		
Model: CAH019GDBM	Jan. 16, 2026	Ver/Rev:	Sheet: 1 of 1	Scale: NTS	Tolerance: +/-0.25"	Dwg Units: in

DAIKIN
13600 Industrial Park Blvd, Minneapolis, MN 55441
www.DaikinApplied.com Software Version: 13.91

All opening dimensions have a 1" mounting flange along the inner edge. The actual airflow area of the opening is 2" smaller in each dimension.

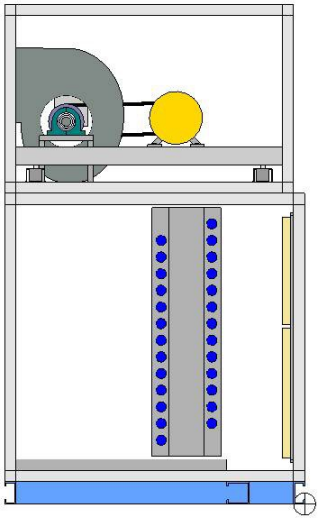

LEFT ELEVATION VIEW

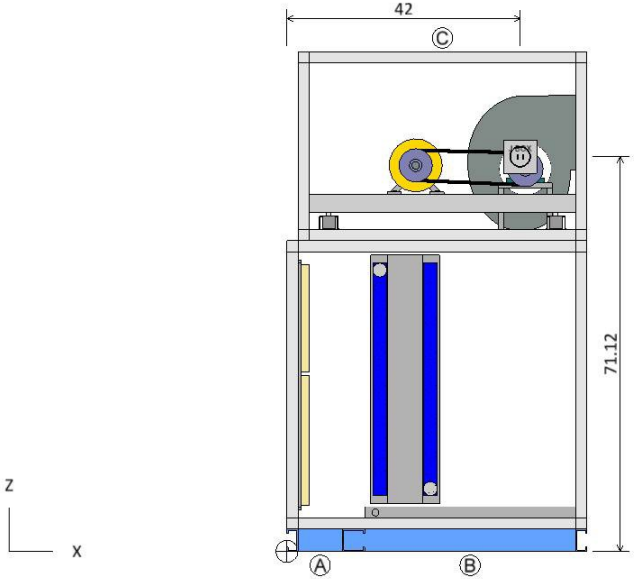

RIGHT ELEVATION VIEW

Component Key

	Type	X	Y	Z	Volts	Phase
Ⓒ	Supply Fan Fan	42.00	0.00	71.12	460	3

Note: Dimensions are measured from the origin point.

Electrical Connections	Unit Tag: AHU-8 (Eiland) Final			Sales Office: HTS Texas		
Product: Vision Air Handler	Project Name: Klein ISD Eiland ES AHU replacements			Sales Engineer:		
Model: CAH019GDBM	Jan. 16, 2026	Ver/Rev:	Sheet: 1 of 1	Scale: NTS	Tolerance: +/-0.25"	Dwg Units: in

DAIKIN
13600 Industrial Park Blvd, Minneapolis, MN 55441
www.DaikinApplied.com Software Version: 13.91

All opening dimensions have a 1" mounting flange along the inner edge. The actual airflow area of the opening is 2" smaller in each dimension.

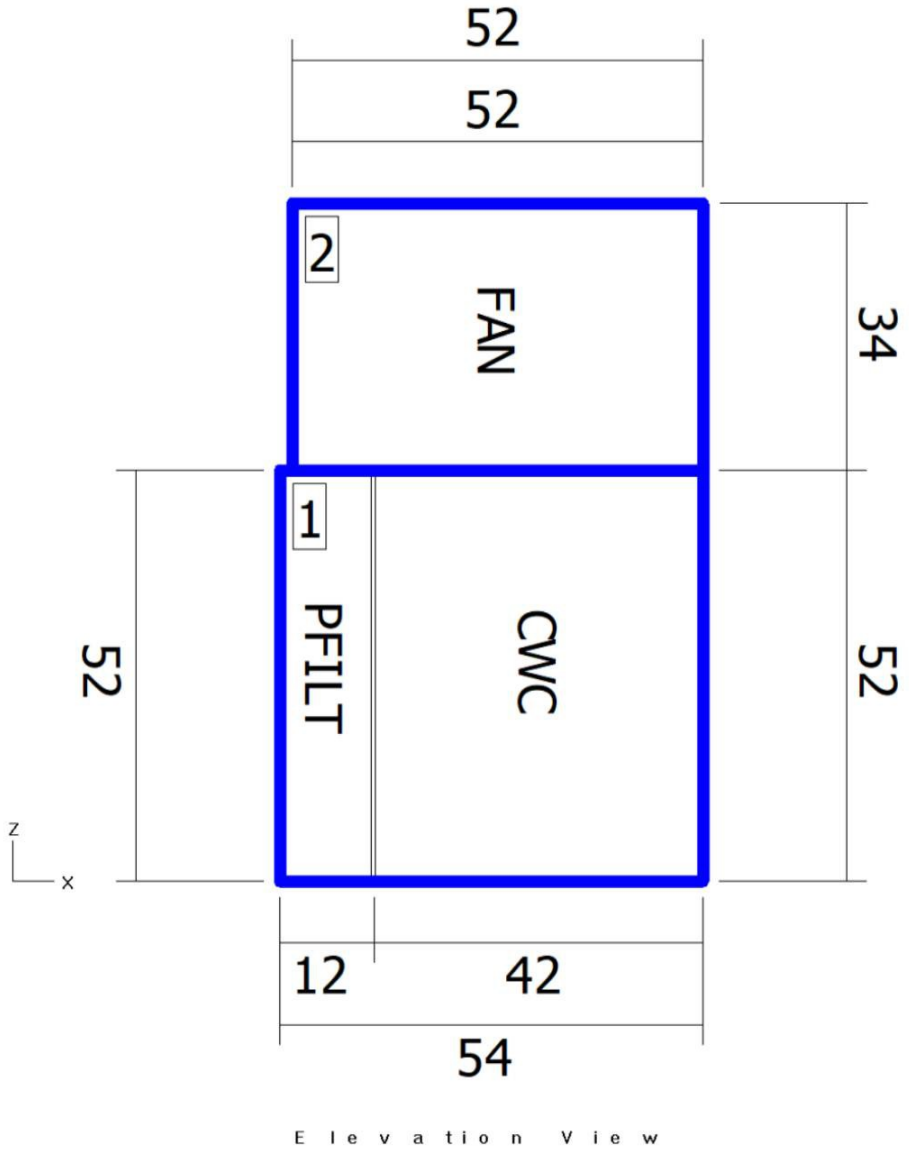

Elevation View

Shipping Sections

Section	Weight (lb)	X	Y	Z
Section 1	1336.74	54	74	52
Section 2	1052.62	52	74	34
Total Unit	2389.37	54	74	86

Note: Base rails, curb ready base, coil connectors, drain connectors, and control boxes not included in height X, Y, Z dimensions. Shipping section may be 2" longer in air flow direction due to internal splice joint.

Shipping Sections	Unit Tag: AHU-8 (Eiland) Final			Sales Office: HTS Texas		
Product: Vision Air Handler	Project Name: Klein ISD Eiland ES AHU replacements			Sales Engineer:		
Model: CAH019GDBM	Jan. 16, 2026	Ver/Rev:	Sheet: 1 of 1	Scale: NTS	Tolerance: +/-0.25"	Dwg Units: in

DAIKIN
13600 Industrial Park Blvd, Minneapolis, MN 55441
www.DaikinApplied.com Software Version: 13.91

All opening dimensions have a 1" mounting flange along the inner edge. The actual airflow area of the opening is 2" smaller in each dimension.

Product Drawing	Unit Tag: AHU-8 (Eiland) Final			Sales Office: HTS Texas			
Product: Vision Air Handler	Project Name: Klein ISD Eiland ES AHU replacements			Sales Engineer:			
Model: CAH019GDBM	Jan. 16, 2026	Ver/Rev:	Sheet: 1 of 1	Scale: NTS	Tolerance: +/-0.25"	Dwg Units: in	

DAIKIN
13600 Industrial Park Blvd, Minneapolis, MN 55441
www.DaikinApplied.com Software Version: 13.91

All opening dimensions have a 1" mounting flange along the inner edge. The actual airflow area of the opening is 2" smaller in each dimension.

Daikin AHU Fan Curve

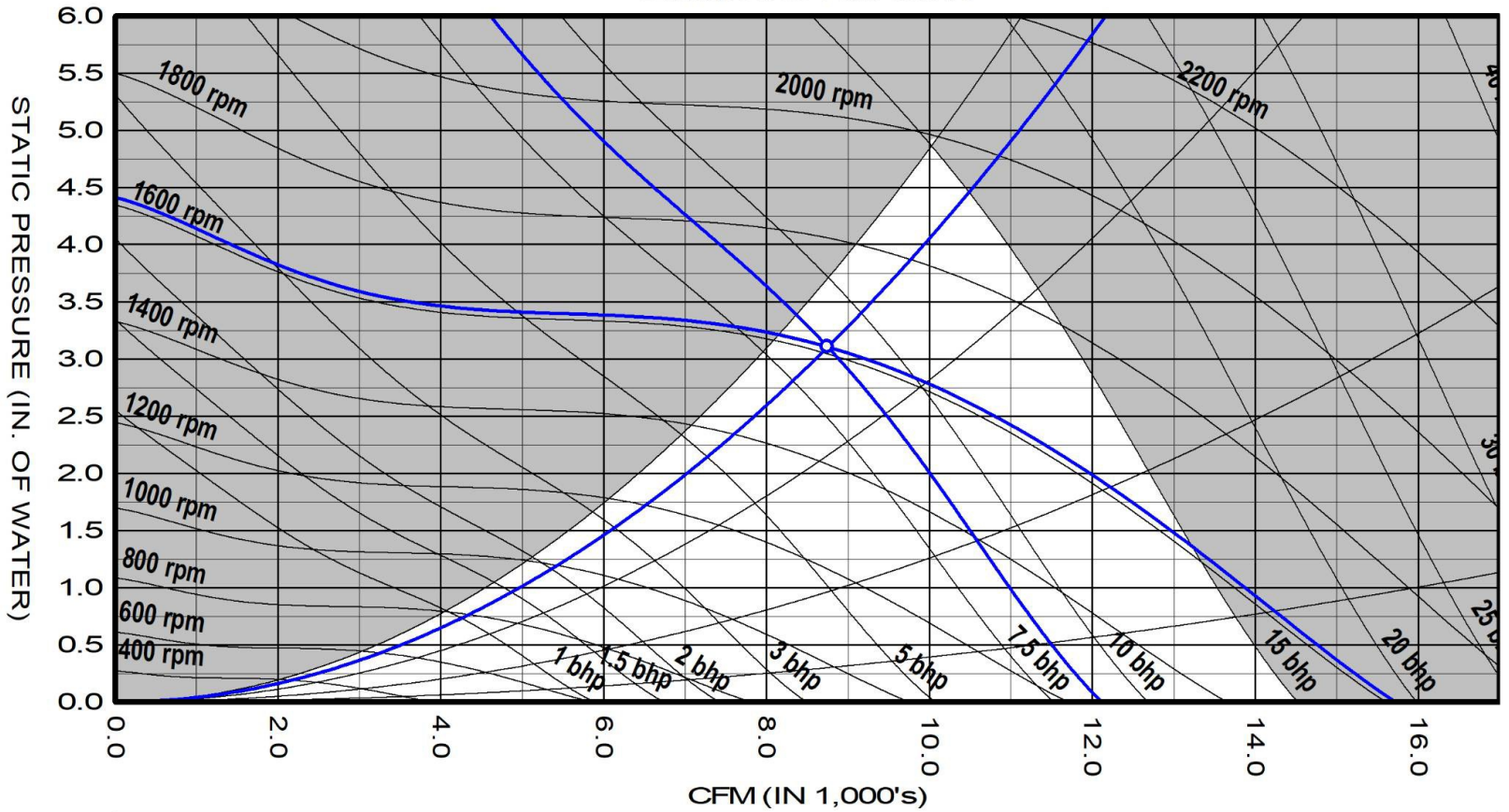

Twin 12.62" Forward Curved Supply Fan at Standard Conditions					
Air volume	8750	cfm	Fan speed	1612	rpm
Total static	3.11	insWg	Max speed	2000	rpm
Fan Shaft Power	8.7	bhp	Efficiency	49.0	%
Fan Energy Index(FEI)	0.89				
Unit tagging	AHU-8 (Eiland) Final		Date	January-16-2026	
Job name	Klein ISD Eiland ES AHU replacements		Time	23:47	

Supply fan performance is certified in accordance with the Central Station Air-Handling Unit Certification Program, which is based on AHRI Standard 430.

Job Information	Technical Data Sheet
Job Name	Klein ISD Eiland ES AHU replacements
Date	January 16 2026
Submitted By	Salas O'Brien
Software Version	13.91
Unit Tag	AHU-9 (Eiland)

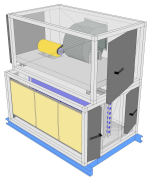

Unit Overview

Model Number	Supply					
	Air Volume cfm	Static Pressure		External Dimensions		
		External inWc	Total inWc	Height in	Width in	Length in
CAH010GDAM	4600	1.00	2.78	34*	68*	46**

**Not including base rails, coil connectors, drain connectors and control boxes.*

***Total lower deck length.*

Unit

Model Number:	CAH010GDAM		
Approval:	ETL Listed / ETL Listed to Canadian Safety Standards (ETL Label / ETLc Label)		
Outer Panel:	18 gauge G90 Galvanized Steel (unpainted)		
Liner:	24 gauge Galvanized Steel (unless noted per section)		
Insulation:	R-13 Injected Foam		
Unit Configuration:	Stacked / vertical	**Drive (Handling) Location:**	Left
Base:	4" formed channel	**Wall Thickness:**	2 in
Altitude:	0 ft	**Parts Warranty:**	Standard One Year

Panel Filter

Component: 1 | Length: 12 in | Shipping Section: 1

Type	Efficiency	Nominal Face Velocity	Actual Face Velocity	Actual Face Area	Air Volume	Filter Loading
Pre Pleat	MERV 13	431 ft/min	456 ft/min	10.1 ft²	4600 cfm	Side

Air Pressure Drop				Number of Filters	Height	Width	Depth
Clean Air	Mean Air	Dirty Air	User Spec				
0.31 inWc	**0.65** inWc	1.00 inWc	N/A	1	24 in	24 in	2 in
				2	24 in	20 in	2 in

Door

Location	Drive Side Door Width	Opp. Drv. Side Door Width	Opening
Both sides	8 in	8 in	Outward

Chilled Water Coil	Component: 2	Length: 34 in	Shipping Section: 1

Coil Model	Total Capacity	Sensible Capacity	Number of Coils	Number of Rows	Fins per Inch	Tube Diameter	Tube Spacing (Face x Row)
5WL1008B	185651 Btu/hr	120175 Btu/hr	1	8	10	0.625 in	1.50 in x 1.299 in

Coil Operating Weight	Coil Dry Weight
330 lb	245 lb

Air Volume	Air Temperature				Coil Air Pressure Drop	Finned Height	Finned Length	Face Area	Face Velocity
	Entering		Leaving						
	Dry Bulb	Wet Bulb	Dry Bulb	Wet Bulb					
4600 cfm	78.0 °F	67.0 °F	54.1 °F	53.9 °F	1.00 inWc	24 in	55 in	9.17 ft²	502 ft/min

Water						
Entering	Leaving	Flow Rate	Pressure Drop	Velocity	Fluid Volume	Fluid Weight
45.0 °F	58.3 °F	28.00 gpm	4.80 ftHd	2.50 ft/s	10.0 gal	85.00 lb

Connection [Data Per Coil]				Min. Fin Surface Temp.	Min. Tube Wall Surface Temp.	Fouling Factor
Type	Size	Location	Material			
Threaded	2.00 in	Drive side	Carbon steel	45.0 °F	45.0 °F	0.000

Material				Drain Pan	Drain Side
Fin	Tube	Header	Case		
Aluminum .0075 in	Copper .020 in	Copper	Stainless steel	Stainless steel	Drive side

AHRI 410 Certification

Certified in accordance with the AHRI Forced-Circulation Air-Cooling and Air-Heating Coils Certification Program which is based on AHRI Standard 410 within the Range of Standard Rating Conditions listed in Table 1 of the Standard. Certified units may be found in the AHRI Directory at www.ahridirectory.org

Door

Location	Drive Side Door Width	Opp. Drv. Side Door Width	Opening
Both sides	14 in	14 in	Outward

Supply Fan

Component: 3 | Length: 40 in | Shipping Section: 2

Fan Performance

Air Volume	Static Pressure			Fan Energy Index(FEI)	Total Input Power	Fan Shaft Power	Fan Wheel Speed		Outlet Velocity
	External	Total	Cabinet				Operating	Maximum	
4600 cfm	1.00 inWc	2.78 inWc	0.13 inWc	0.91	3.9 kW	4.12 BHP	1440 rpm	2091 rpm	3129 ft/min

Fan Data

Fan Type	Blade Type / Class	Quantity of Fans	Wheel Diameter	Number of Blades	Discharge	Motor Location
Centrifugal DWDI	Forward Curved / 2	1	12.62 in	N/A	Top horizontal	To Side of Fan

Motor Data

Power	Electrical Supply	Speed	Efficiency	Enclosure	Frame Size	Supplier	Number of Poles	Lock Rotor Current	Full Load Current
5.0 HP	460/60/3 V/Hz/Phase	1750 rpm	Premium	TEFC	184 T frame	Generic	4	47.04 A	6.70 A

Fan Options

Shaft Grounding Kit:	Provided	**Isolator Type:**	Spring

Drive Package Data*

Fan Sheave	Motor Sheave	Belt	Number of Belts	Actual Drive S.F.	Bearing Type
2AK44H	2AK34H	AX31	2	1.13	Standard - L50 (200K)

**Daikin Applied reserves the right to provide a different but equivalent drive package*

VFD/Starter/Disconnect Data

Selection Type:	External J-Box	**Vendor:**	Factory Standard
Voltage:	460 V	**Height x Width x Depth:**	6.00 in x 6.00 in x 4.00 in
Mounting:	Door Side	**Enclosure:**	NEMA 1

Door

Location	Drive Side Door Width	Opp. Drv. Side Door Width	Opening
Both sides	24 in	30 in	Outward

Unit Sound Power (dB)

Type	63 Hz	125 Hz	250 Hz	500 Hz	1000 Hz	2000 Hz	4000 Hz	8000 Hz
Radiated:	80	85	72	66	70	60	46	51
Unit Discharge:	90	95	90	87	92	88	83	82
Unit Return:	83	86	80	77	82	78	71	67

Shipping Section Details

Section	Length in	Weight lb	Corner Weights (lb)				Center of Gravity (in)		
			P1	P2	P3	P4	XX	YY	ZZ
1	46	903	214	228	238	223	23	35	17
2	40	694	210	155	136	190	19	29	17
Entire Unit	**46** *Lower level only*	**1597**	**n/a**	**n/a**	**n/a**	**n/a**	**n/a**	**n/a**	**n/a**

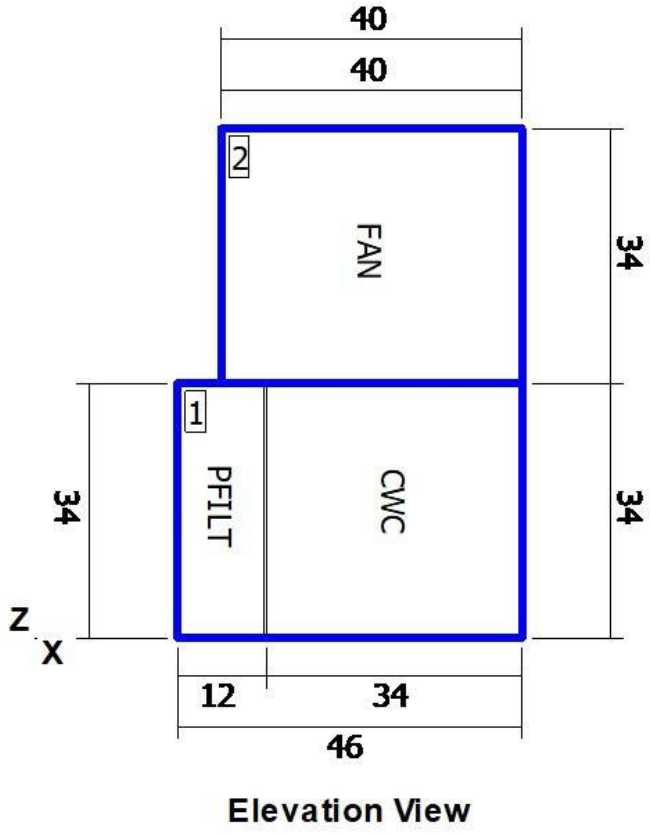

Elevation View

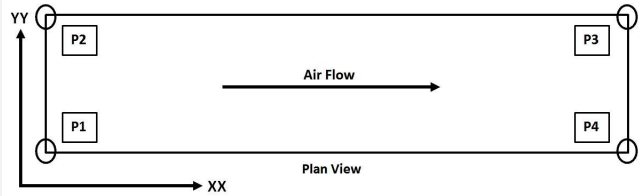

NOTE: Special components aren't included in the corner weights and center of gravity data.

NOTE: Shipping weights listed do not include weight of water (listed in coil section(s) above.

Shipping Protection

None

Supply Static Pressure Drop

Component	Option	Static Pressure Drop
Panel Filter	Panel Filter	0.65 insWg
Chilled Water coil	Chilled Water coil	1.00 insWg
Supply Fan	Cabinet	0.13 insWg
External Static	External Static	1.00 insWg
Total Supply Fan Static		2.78 insWg

Minimum Recommended Drain Pan Trap Dimensions

Shipping Section	Component	H
1	Chilled Water coil	3.80

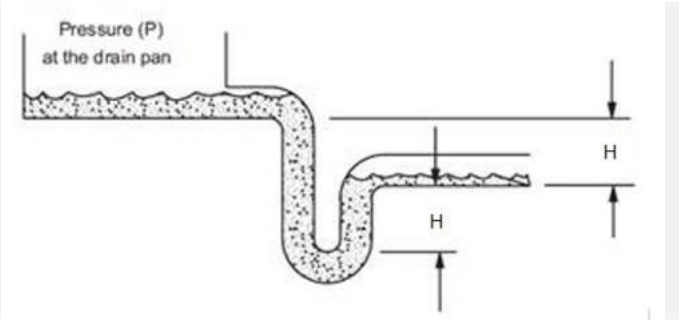

Dimensions provided as a courtesy and are recommended minimums only. Daikin is not responsible for supplying or designing drain pan traps and is not responsible for any damage caused by incorrect trap heights. The dimensions listed above should be reviewed and approved by a licensed plumbing professional.

AHRI Certification

Certified by the AHRI Central Station Air-Handling Unit (AHU) Certification Program, which is based on AHRI Standard 430/431. AHRI certified units are subject to rigorous and continuous testing, have performance ratings independently measured and are third-party verified. Certified units may be found in the AHRI Directory at www.ahridirectory.org.

Notes

Standard
1. As a standalone component, unit meets or exceeds requirements of ASHRAE 90.1 - 2007. The approving authority is responsible for compliance of multi - component building systems.

BQZQ3P

Klein ISD Eiland ES AHU re

65

1/16/2026

AHU-9 (Eiland)

Drawing

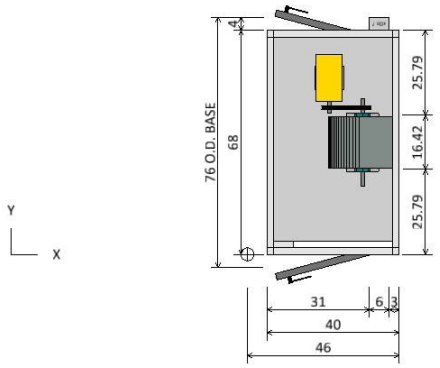

TOP DECK PLAN VIEW

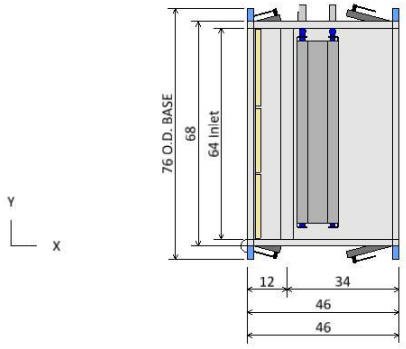

BOTTOM DECK PLAN VIEW

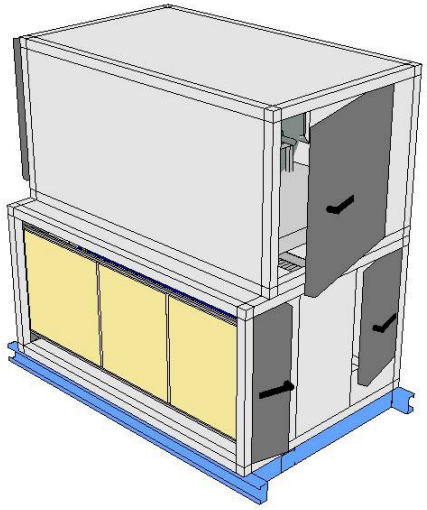

ISOMETRIC VIEW

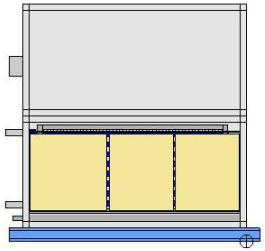

FRONT END VIEW

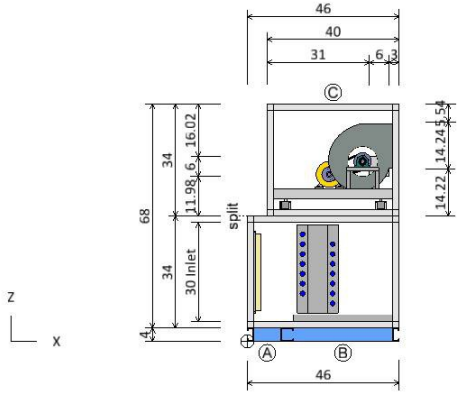

ELEVATION VIEW

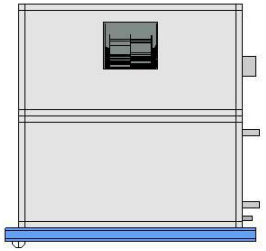

REAR END VIEW

Product Drawing	Unit Tag: AHU-9 (Eiland)			Sales Office: HTS Texas		
Product: Vision Air Handler	Project Name: Klein ISD Eiland ES AHU replacements			Sales Engineer:		
Model: CAH010GDAM	Jan. 16, 2026	Ver/Rev:	Sheet: 1 of 1	Scale: NTS	Tolerance: +/-0.25"	Dwg Units: in

DAIKIN
13600 Industrial Park Blvd, Minneapolis, MN 55441
www.DaikinApplied.com Software Version: 13.91

All opening dimensions have a 1" mounting flange along the inner edge. The actual airflow area of the opening is 2" smaller in each dimension.

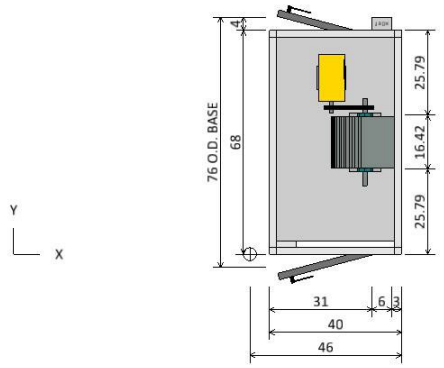

TOP DECK PLAN VIEW

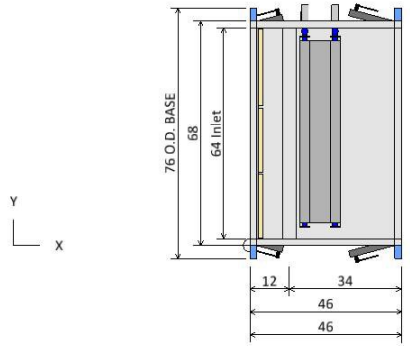

BOTTOM DECK PLAN VIEW

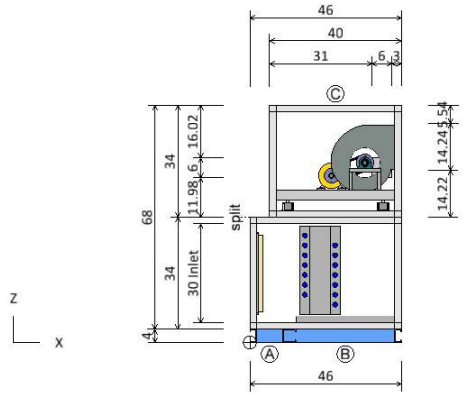

ELEVATION VIEW

Component Key		
Ⓐ	Panel Filter	
	Filter Type:	PrePleat (MERV 13)
	Right Door (WxH):	8 ins x 30 ins
	Left Door (WxH):	8 ins x 30 ins
Ⓑ	Chilled Water coil	
	Coil Model:	5WL1008B
	Total Capacity:	185651.0 Btu/hr
	Right Door (WxH):	14 ins x 24 ins
	Left Door (WxH):	14 ins x 24 ins
Ⓒ	Supply Fan	
	Fan Type:	Centrifugal DWDI
	Fan Size (Class):	12 (2)
	Air Flowrate:	4600.0 cfm
	T.S.P:	2.8 insWg
	Motor Power:	5.0 HP
	Right Door (WxH):	30 ins x 30 ins
	Left Door (WxH):	24 ins x 30 ins

Product Drawing	Unit Tag: AHU-9 (Eiland)			Sales Office: HTS Texas		
Product: Vision Air Handler	Project Name: Klein ISD Eiland ES AHU replacements			Sales Engineer:		
Model: CAH010GDAM	Jan. 16, 2026	Ver/Rev:	Sheet: 1 of 1	Scale: NTS	Tolerance: +/-0.25"	Dwg Units: in

DAIKIN
13600 Industrial Park Blvd, Minneapolis, MN 55441
www.DaikinApplied.com Software Version: 13.91

All opening dimensions have a 1" mounting flange along the inner edge. The actual airflow area of the opening is 2" smaller in each dimension.

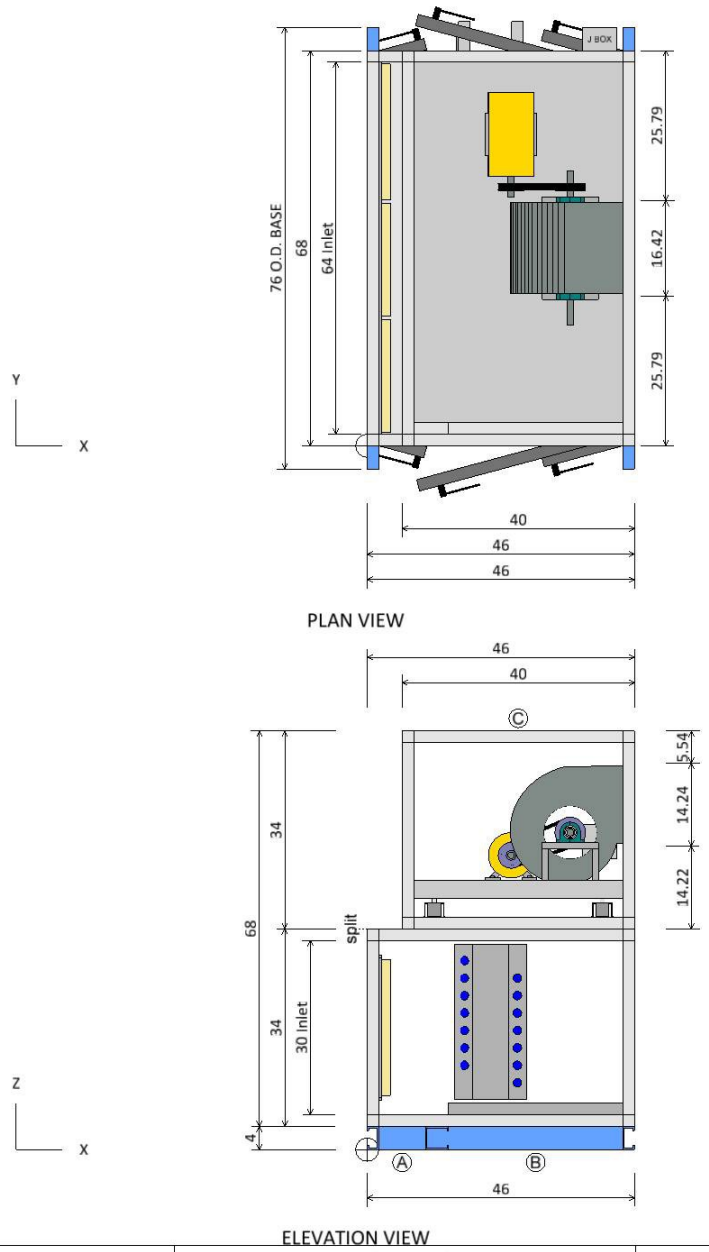

Component Key

	Type	X	Y	Z	Wid	Hgt
Ⓐ	Panel Filter Opening	0.00	2.00	6.00	64.00	30.00
Ⓒ	Supply Fan Fan Discharge	46.00	31.79	52.22	16.42	14.24

Note: Dimensions are measured from the origin point.
Note: Openings with or without dampers are recessed into the unit by approximately 1.75 in.

Opening/Damper Connections	Unit Tag: AHU-9 (Eiland)			Sales Office: HTS Texas		
Product: Vision Air Handler	Project Name: Klein ISD Eiland ES AHU replacements			Sales Engineer:		
Model: CAH010GDAM	Jan. 16, 2026	Ver/Rev:	Sheet: 1 of 1	Scale: NTS	Tolerance: +/-0.25"	Dwg Units: in

DAIKIN
13600 Industrial Park Blvd, Minneapolis, MN 55441
www.DaikinApplied.com Software Version: 13.91

All opening dimensions have a 1" mounting flange along the inner edge. The actual airflow area of the opening is 2" smaller in each dimension.

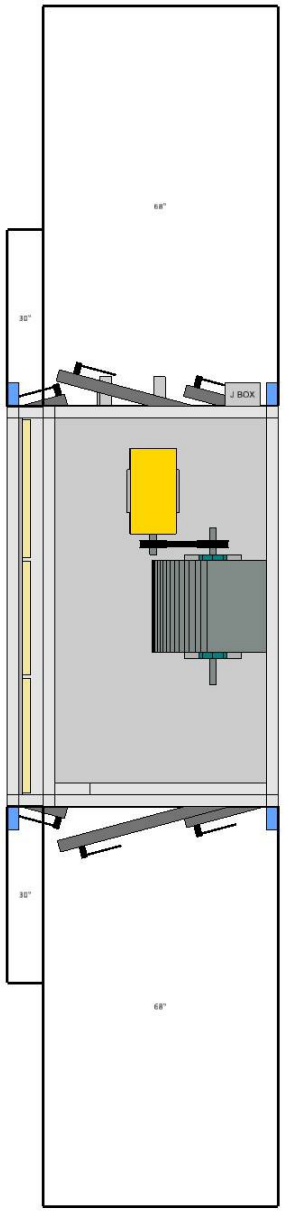

PLAN VIEW

Notes
Check local electrical component service clearance codes for specific distances. Access is only required on one side of the unit.

Service Clearance View	Unit Tag: AHU-9 (Eiland)			Sales Office: HTS Texas		
Product: Vision Air Handler	Project Name: Klein ISD Eiland ES AHU replacements			Sales Engineer:		
Model: CAH010GDAM	Jan. 16, 2026	Ver/Rev:	Sheet: 1 of 1	Scale: NTS	Tolerance: +/-0.25"	Dwg Units: in

DAIKIN
13600 Industrial Park Blvd, Minneapolis, MN 55441
www.DaikinApplied.com Software Version: 13.91

All opening dimensions have a 1" mounting flange along the inner edge. The actual airflow area of the opening is 2" smaller in each dimension.

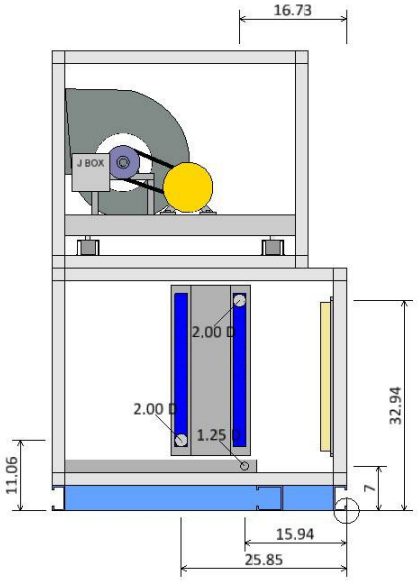

LEFT ELEVATION VIEW

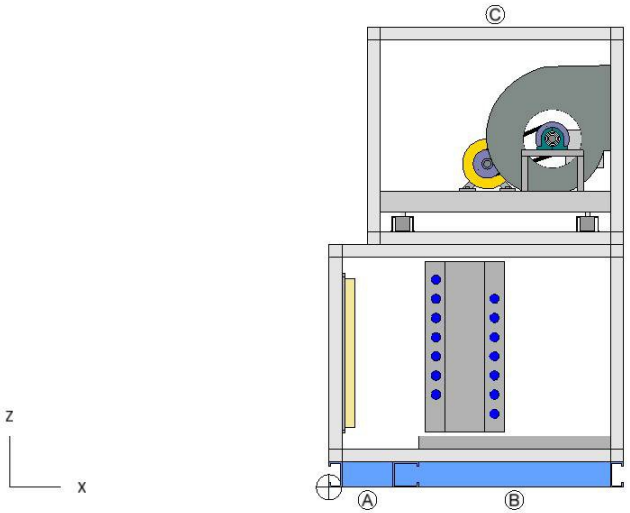

RIGHT ELEVATION VIEW

Coil and Drain Connections

	Type	X	Y	Z	Diam
Ⓑ	Chilled Water coil				
	Condensate drain conn:	15.94	70.90	7.00	1.25
	Cold water inlet:	25.85	75.00*	11.06	2.00
	Cold water outlet:	16.73	75.00*	32.94	2.00

Notes:
Dimensions are measured from the origin point.
* value varies +/- 1 in.

Coil and Drain Connections	Unit Tag: AHU-9 (Eiland)			Sales Office: HTS Texas		
Product: Vision Air Handler	Project Name: Klein ISD Eiland ES AHU replacements			Sales Engineer:		
Model: CAH010GDAM	Jan. 16, 2026	Ver/Rev:	Sheet: 1 of 1	Scale: NTS	Tolerance: +/-0.25"	Dwg Units: in

DAIKIN
13600 Industrial Park Blvd, Minneapolis, MN 55441
www.DaikinApplied.com Software Version: 13.91

All opening dimensions have a 1" mounting flange along the inner edge. The actual airflow area of the opening is 2" smaller in each dimension.

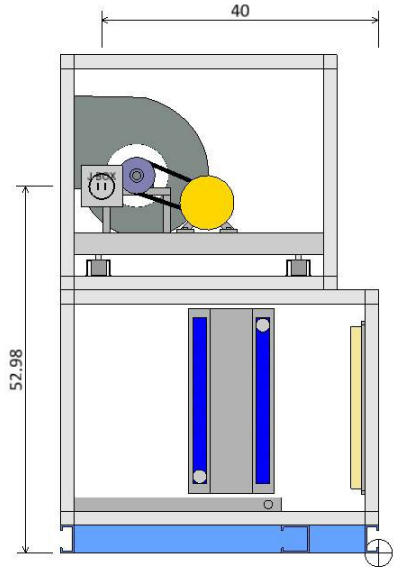

LEFT ELEVATION VIEW

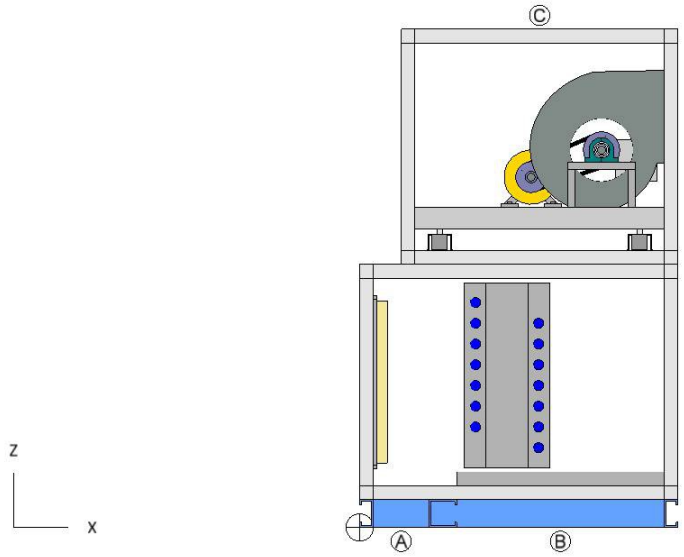

RIGHT ELEVATION VIEW

Component Key

	Type	X	Y	Z	Volts	Phase
Ⓒ	Supply Fan Fan	40.00	68.00	52.98	460	3

Note: Dimensions are measured from the origin point.

Electrical Connections	Unit Tag: AHU-9 (Eiland)			Sales Office: HTS Texas		
Product: Vision Air Handler	Project Name: Klein ISD Eiland ES AHU replacements			Sales Engineer:		
Model: CAH010GDAM	Jan. 16, 2026	Ver/Rev:	Sheet: 1 of 1	Scale: NTS	Tolerance: +/-0.25"	Dwg Units: in

DAIKIN
13600 Industrial Park Blvd, Minneapolis, MN 55441
www.DaikinApplied.com Software Version: 13.91

All opening dimensions have a 1" mounting flange along the inner edge. The actual airflow area of the opening is 2" smaller in each dimension.

BQZQ3P | Klein ISD Eiland ES AHU re | 71 | 1/16/2026

AHU-9 (Eiland) | Drawing

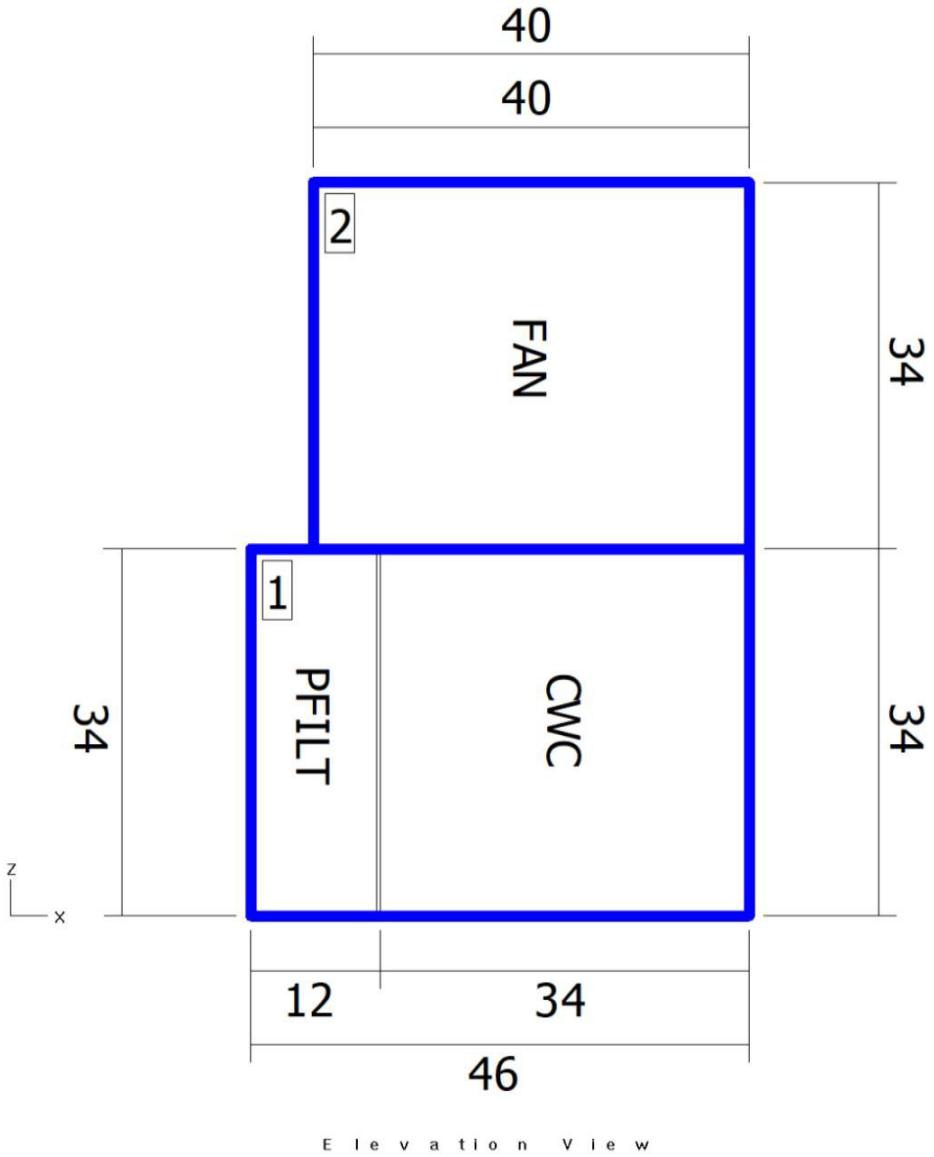

Elevation View

Shipping Sections

Section	Weight (lb)	X	Y	Z
Section 1	902.92	46	68	34
Section 2	694.26	40	68	34
Total Unit	1597.19	46	68	68

Note: Base rails, curb ready base, coil connectors, drain connectors, and control boxes not included in height X, Y, Z dimensions.
Shipping section may be 2" longer in air flow direction due to internal splice joint.

Shipping Sections	Unit Tag: AHU-9 (Eiland)			Sales Office: HTS Texas		
Product: Vision Air Handler	Project Name: Klein ISD Eiland ES AHU replacements			Sales Engineer:		
Model: CAH010GDAM	Jan. 16, 2026	Ver/Rev:	Sheet: 1 of 1	Scale: NTS	Tolerance: +/-0.25"	Dwg Units: in

DAIKIN
13600 Industrial Park Blvd, Minneapolis, MN 55441
www.DaikinApplied.com Software Version: 13.91

All opening dimensions have a 1" mounting flange along the inner edge. The actual airflow area of the opening is 2" smaller in each dimension.

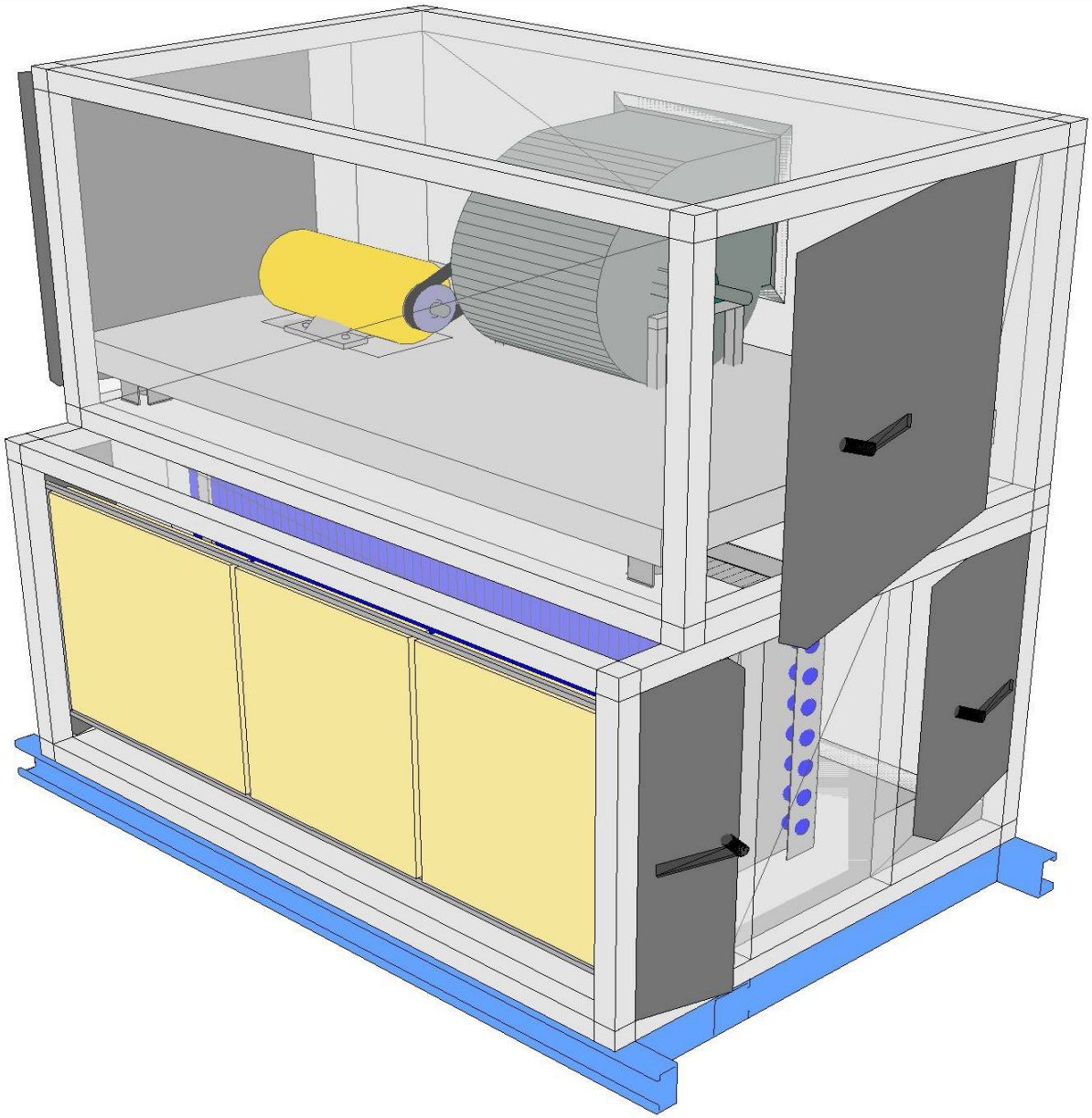

Product Drawing	Unit Tag: AHU-9 (Eiland)			Sales Office: HTS Texas			DAIKIN
Product: Vision Air Handler	Project Name: Klein ISD Eiland ES AHU replacements			Sales Engineer:			13600 Industrial Park Blvd, Minneapolis, MN 55441
Model: CAH010GDAM	Jan. 16, 2026	Ver/Rev:	Sheet: 1 of 1	Scale: NTS	Tolerance: +/-0.25"	Dwg Units: in	www.DaikinApplied.com Software Version: 13.91

All opening dimensions have a 1" mounting flange along the inner edge. The actual airflow area of the opening is 2" smaller in each dimension.

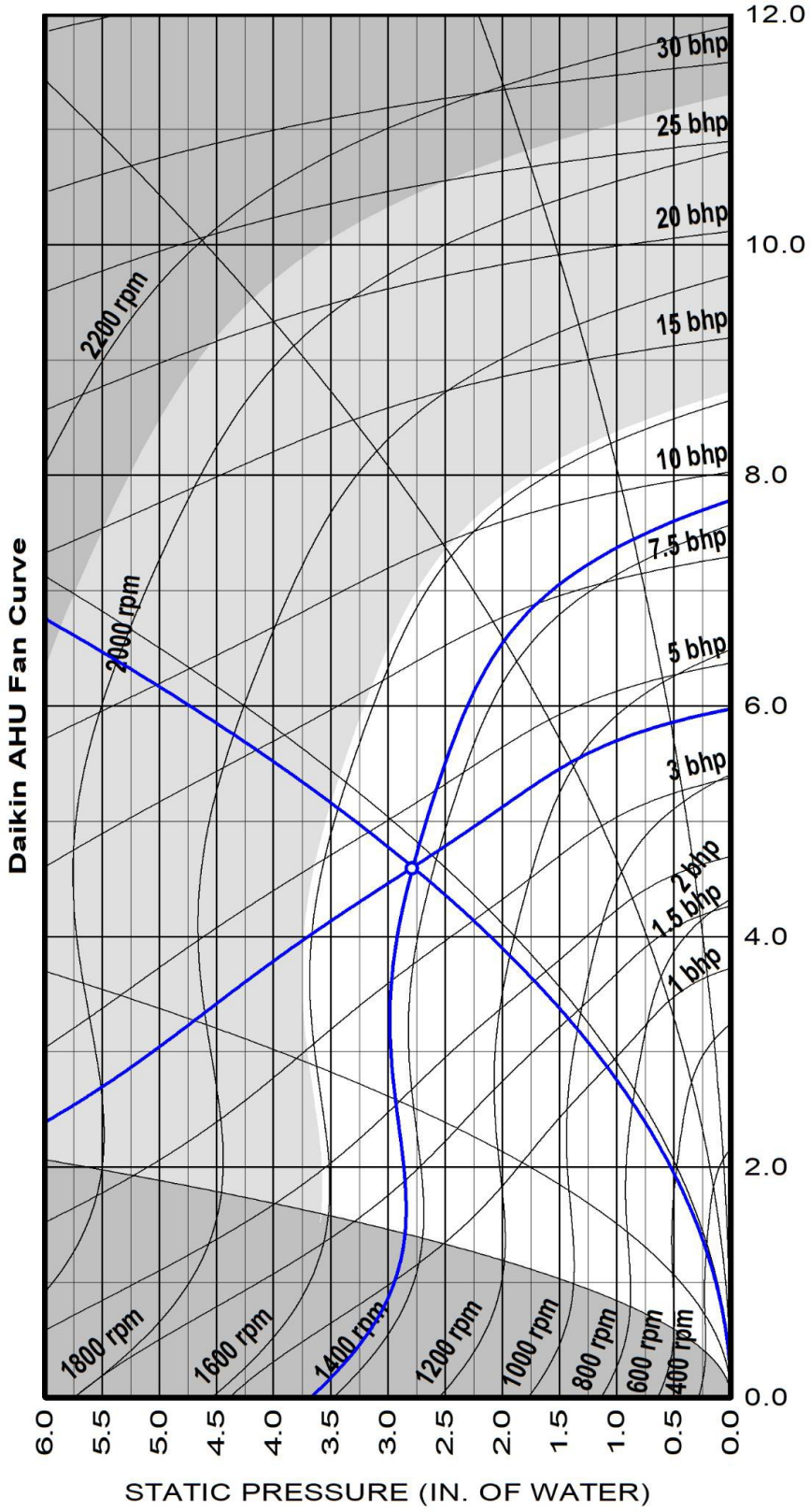

12.62" Forward Curved Supply Fan at Standard Conditions

Air volume	4600	cfm	Fan speed	1440	rpm
Total static	2.78	insWg	Max speed	2091	rpm
Fan Shaft Power	4.1	bhp	Efficiency	48.9	%
Fan Energy Index(FEI)	0.91				

Unit tagging AHU-9 (Eiland) Date January-16-2026

Job name Klein ISD Eiland ES AHU replacements Time 23:47

Supply fan performance is certified in accordance with the Central Station Air-Handling Unit Certification Program, which is based on AHRI Standard 430.

Job Information	Technical Data Sheet
Job Name	Klein ISD Eiland ES AHU replacements
Date	January 16 2026
Submitted By	Salas O'Brien
Software Version	13.91
Unit Tag	AHU-26 (Eiland) Final

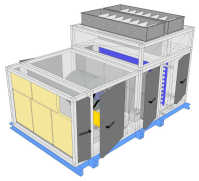

Unit Overview

Model Number	Supply					
	Air Volume cfm	Static Pressure		External Dimensions		
		External inWc	Total inWc	Height in	Width in	Length in
CAH012GMAM	4000	0.80	2.08	42*	64*	112

**Not including base rails, coil connectors, drain connectors and control boxes.*

Unit

Model Number:	CAH012GMAM		
Approval:	ETL Listed / ETL Listed to Canadian Safety Standards (ETL Label / ETLc Label)		
Outer Panel:	18 gauge G90 Galvanized Steel (unpainted)		
Liner:	24 gauge Galvanized Steel (unless noted per section)		
Insulation:	R-13 Injected Foam		
Unit Configuration:	Multizone	**Drive (Handling) Location:**	Right
Base:	4" formed channel	**Wall Thickness:**	2 in
Altitude:	0 ft	**Parts Warranty:**	Additional One Year, Two Year Total

Panel Filter

Component: 1 | Length: 12 in | Shipping Section: 1

Type	Efficiency	Nominal Face Velocity	Actual Face Velocity	Actual Face Area	Air Volume	Filter Loading
Pre Pleat	MERV 13	286 ft/min	305 ft/min	13.1 ft²	4000 cfm	Side

Air Pressure Drop				Number of Filters	Height	Width	Depth
Clean Air	Mean Air	Dirty Air	User Spec				
0.18 inWc	**0.59** inWc	1.00 inWc	N/A	3	24 in	20 in	2 in
				2	12 in	24 in	2 in

Door

Location	Drive Side Door Width	Opp. Drv. Side Door Width	Opening
Both sides	8 in	8 in	Outward

Supply Fan	Component: 2	Length: 42 in	Shipping Section: 2

Fan Performance

Air Volume	Static Pressure			Fan Energy Index(FEI)	Total Input Power	Fan Shaft Power	Fan Wheel Speed		Outlet Velocity
	External	Total	Cabinet				Operating	Maximum	
4000 cfm	0.80 inWc	2.08 inWc	0.00 inWc	1.08	2.3 kW	2.36 BHP	1019 rpm	1725 rpm	1932 ft/min

Fan Data

Fan Type	Blade Type / Class	Quantity of Fans	Wheel Diameter	Number of Blades	Discharge	Motor Location
Centrifugal DWDI	Forward Curved / 2	1	15.00 in	N/A	Bottom horizontal	To Side of Fan

Motor Data

Power	Electrical Supply	Speed	Efficiency	Enclosure	Frame Size	Supplier	Number of Poles	Lock Rotor Current	Full Load Current
5.0 HP	460/60/3 V/Hz/Phase	1750 rpm	Premium	TEFC	184 T frame	Generic	4	47.04 A	6.70 A

Fan Options

Shaft Grounding Kit:	Provided	Isolator Type:	Spring

Drive Package Data*

Fan Sheave	Motor Sheave	Belt	Number of Belts	Actual Drive S.F.	Bearing Type
2AK64H	2AK39H	A41	2	1.18	Standard - L50 (200K)

**Daikin Applied reserves the right to provide a different but equivalent drive package*

VFD/Starter/Disconnect Data

Selection Type:	External J-Box	Vendor:	Factory Standard
Voltage:	460 V	Height x Width x Depth:	6.00 in x 6.00 in x 4.00 in
Mounting:	Door Side	Enclosure:	NEMA 1

Door

Location	Drive Side Door Width	Opp. Drv. Side Door Width	Opening
Both sides	26 in	30 in	Outward

Two Deck Multizone	Component: 3	Length: 58 in	Shipping Section: 3 & 4 & 5

Discharge Location	Number of Zones	Multizone APD*	Damper Type	Actuation
Vertical / Vertical	7	0.69 inWc	Low leak / Low leak	None - damper mechanically linked

Note : includes coil & balance plate & diffuser

Note : Cabinet height for multizone extends 16 inches above 'External cabinet height' referenced above.
The damper assembly will add 8.38 inches to the cabinet length for horizontal discharge and 8.38 inches to the height for vertical discharge.

Cold Deck Coil

Coil Model	Total Capacity	Sensible Capacity	Number of Coils	Number of Rows	Fins per Inch	Tube Diameter	Tube Spacing (Face x Row)
5WH1105B	160448 Btu/hr	103175 Btu/hr	1	5	11	0.625 in	1.50 in X 1.299 in

Coil Operating Weight	Coil Dry Weight
278 lb	205 lb

Air Volume	Air Temperature				Coil Air Pressure Drop	Finned Height	Finned Length	Face Area	Face Velocity
	Entering		Leaving						
	Dry Bulb	Wet Bulb	Dry Bulb	Wet Bulb					
4000 cfm	78.0 °F	67.0 °F	54.4 °F	54.0 °F	0.37 inWc	33 in	51 in	11.69 ft²	342 ft/min

Water

Entering	Leaving	Flow Rate	Pressure Drop	Velocity	Fluid Volume	Fluid Weight
45.0 °F	56.1 °F	29.00 gpm	6.50 ftHd	2.80 ft/s	8.0 gal	73.00 lb

Connection [Data Per Coil]				Min. Fin Surface Temp.	Min. Tube Wall Surface Temp.	Fouling Factor
Type	Size	Location	Material			
Threaded	1.50 in	Drive side	Carbon steel	45.0 °F	45.0 °F	0.000

Material				Drain Pan	Drain Side	Electro-Fin Coat	Moisture Eliminator
Fin	Tube	Header	Case				
Aluminum .0075 in	Copper .020 in	Copper	Stainless steel	Stainless steel	Drive side	NA	NA

AHRI 410 Certification

Certified in accordance with the AHRI Forced-Circulation Air-Cooling and Air-Heating Coils Certification Program which is based on AHRI Standard 410 within the Range of Standard Rating Conditions listed in Table 1 of the Standard. Certified units may be found in the AHRI Directory at www.ahridirectory.org

Future Hot Deck Coil(58 ins)

Number of Coils	Number of Rows
1	1

Coil Air Pressure Drop	Finned Height	Finned Width	Face Area	Face Velocity
NA inWc	18 in	48 in	6.00 ft²	667 ft/min

Connection Location	Connection Material
Drive side	Carbon steel

Coil Model	Drain Pan	Drain Pan Side
Future Coil (Not Supplied)	NA	NA

AHRI 410 Certification

Coil is NOT certified by AHRI

Door

Location	Drive Side Door Width	Opp. Drv. Side Door Width	Opening
Both sides	20 in	20 in	Outward

Unit Sound Power (dB)

Type	63 Hz	125 Hz	250 Hz	500 Hz	1000 Hz	2000 Hz	4000 Hz	8000 Hz
Radiated:	70	72	64	59	56	46	46	51
Unit Discharge:	80	82	82	80	78	74	74	69
Unit Return:	76	78	78	76	74	70	70	65

Shipping Section Details

Section	Length in	Weight lb	Corner Weights (lb)				Center of Gravity (in)		
			P1	P2	P3	P4	XX	YY	ZZ
1	12	225	50	50	62	62	7	32	21
2	42	835	239	183	178	235	21	28	19
3	22	237	54	54	65	65	12	32	18
4	36	757	223	210	156	169	15	31	20
5	58	306	242	224	75	93	15	30	12
Entire Unit	**112**	**2360**	**683**	**596**	**661**	**747**	**59**	**30**	**28**

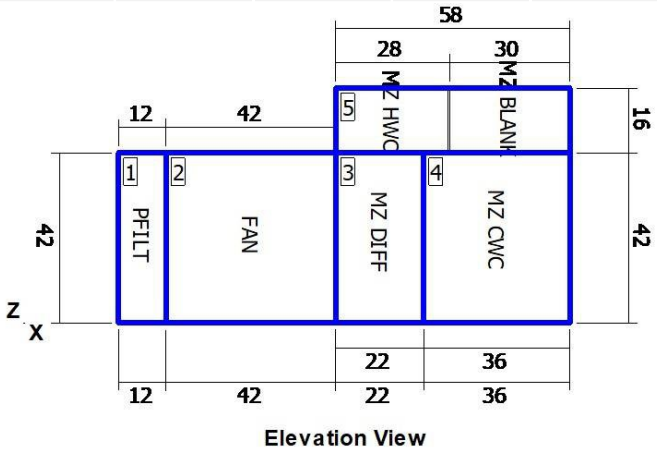

Elevation View

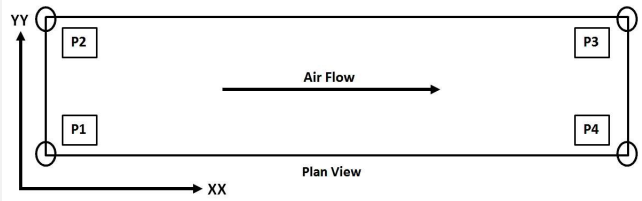

NOTE: Special components aren't included in the corner weights and center of gravity data.

Shipping Protection

None

Supply Static Pressure Drop

Component	Option	Static Pressure Drop
Panel Filter	Panel Filter	0.59 insWg
Supply Fan	Cabinet	
Multizone	Multizone	0.69 insWg
External Static	External Static	0.80 insWg
Total Supply Fan Static		2.08 insWg

Minimum Recommended Drain Pan Trap Dimensions

Shipping Section	Component	H
4	Chilled Water coil	1.44

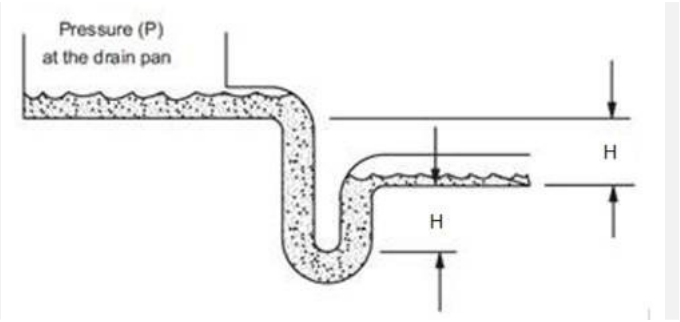

Dimensions provided as a courtesy and are recommended minimums only. Daikin is not responsible for supplying or designing drain pan traps and is not responsible for any damage caused by incorrect trap heights. The dimensions listed above should be reviewed and approved by a licensed plumbing professional.

This calculation is based on an assumption that 0.25 inches of the external static pressure is in the return duct and the remainder is in the supply duct. If actual conditions vary from this assumption then contact Applications for new trap height recommendations.

AHRI Certification

Certified by the AHRI Central Station Air-Handling Unit (AHU) Certification Program, which is based on AHRI Standard 430/431. AHRI certified units are subject to rigorous and continuous testing, have performance ratings independently measured and are third-party verified. Certified units may be found in the AHRI Directory at www.ahridirectory.org.

Notes

Standard
1. As a standalone component, unit meets or exceeds requirements of ASHRAE 90.1 - 2007. The approving authority is responsible for compliance of multi - component building systems.

BQZQ3P

Klein ISD Eiland ES AHU re

79

1/16/2026

AHU-26 (Eiland) Final

Drawing

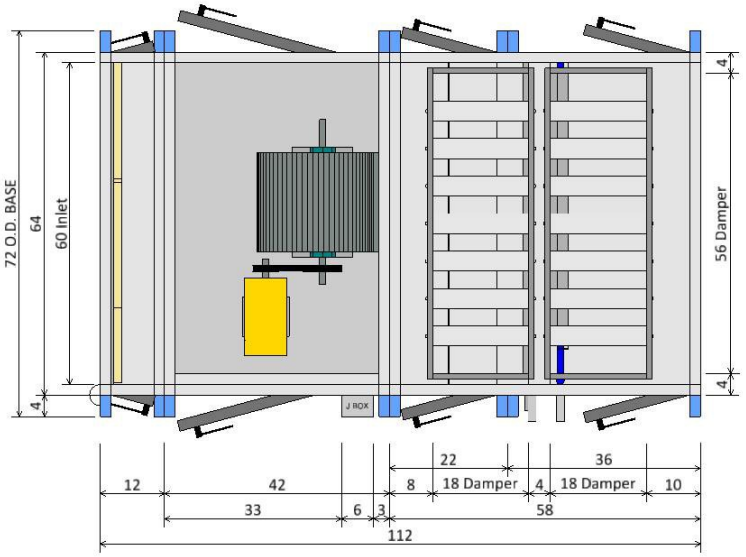

PLAN VIEW

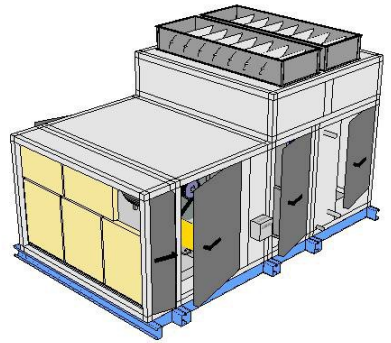

ISOMETRIC VIEW

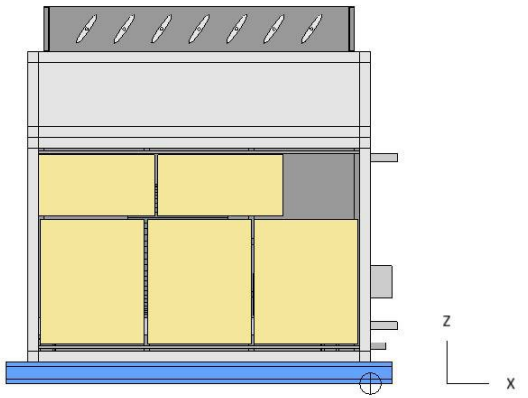

FRONT END VIEW

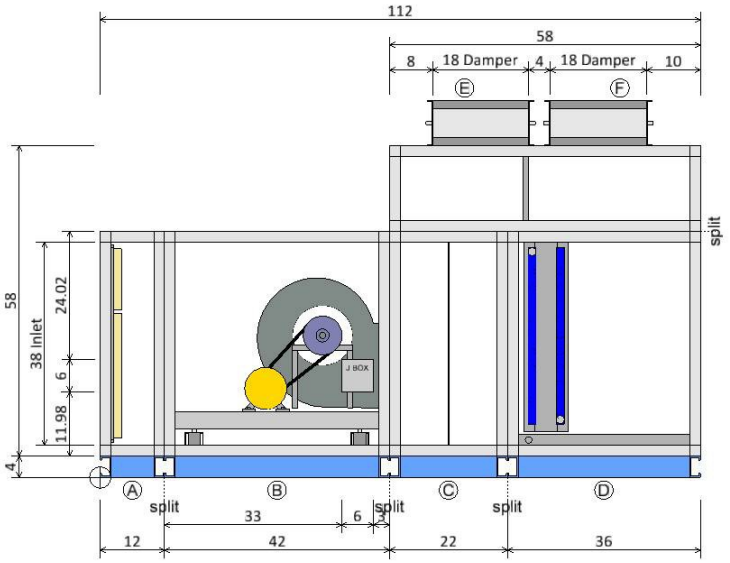

ELEVATION VIEW

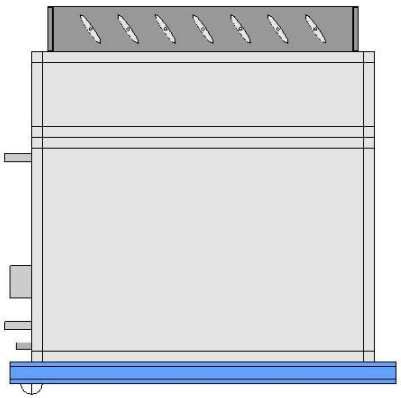

REAR END VIEW

Plan/Elevation	Unit Tag: AHU-26 (Eiland) Final			Sales Office: HTS Texas		
Product: Vision Air Handler	Project Name: Klein ISD Eiland ES AHU replacements			Sales Engineer:		
Model: CAH012GMAM	Jan. 16, 2026	Ver/Rev:	Sheet: 1 of 1	Scale: NTS	Tolerance: +/-0.25"	Dwg Units: in

DAIKIN
13600 Industrial Park Blvd, Minneapolis, MN 55441
www.DaikinApplied.com Software Version: 13.91

All opening dimensions have a 1" mounting flange along the inner edge. The actual airflow area of the opening is 2" smaller in each dimension.

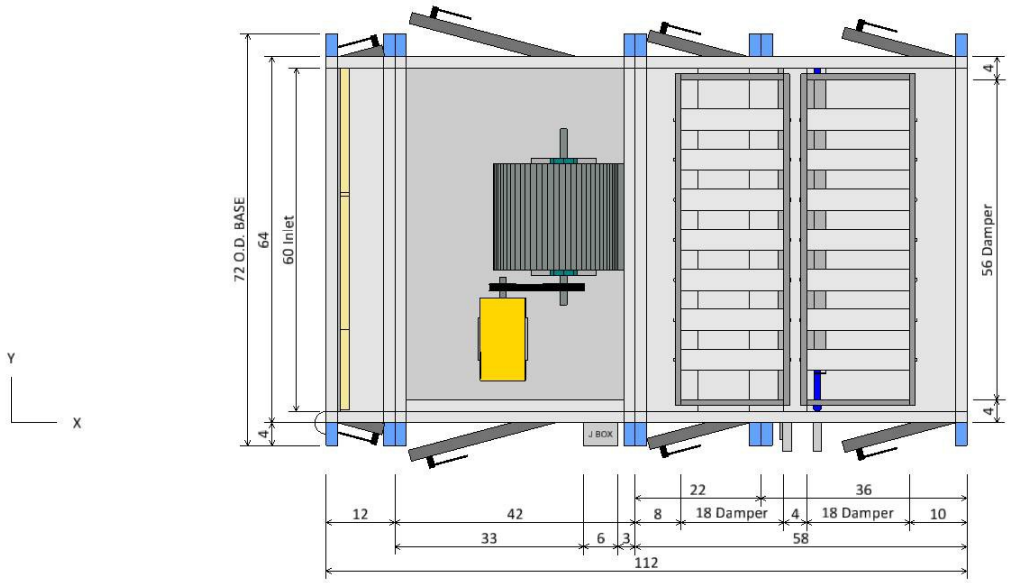

PLAN VIEW

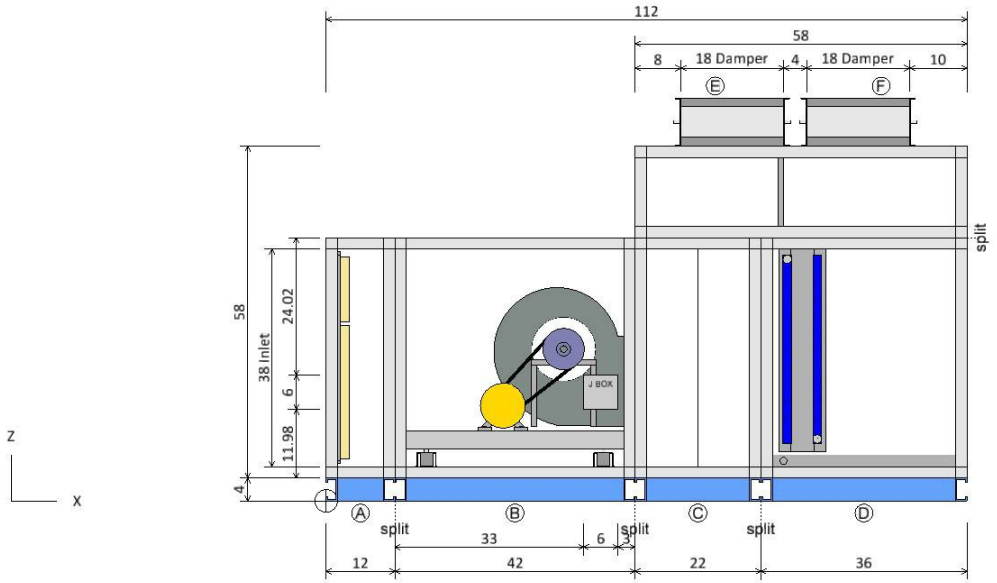

ELEVATION VIEW

Component Key		
Ⓐ	Panel Filter	
	Filter Type:	PrePleat (MERV 13)
	Right Door (WxH):	8 ins x 38 ins
	Left Door (WxH):	8 ins x 38 ins
Ⓑ	Supply Fan	
	Fan Type:	Centrifugal DWDI
	Fan Size (Class):	15 (2)
	Air Flowrate:	4000.0 cfm
	T.S.P:	2.1 insWg
	Motor Power:	5.0 HP
	Right Door (WxH):	26 ins x 38 ins
	Left Door (WxH):	30 ins x 38 ins
Ⓒ	Diffuser	
	Right Door (WxH):	18 ins x 38 ins
	Left Door (WxH):	18 ins x 38 ins
Ⓓ	Chilled Water coil	
	Coil Model:	5WH1105B
	Total Capacity:	160448.0 Btu/hr
	Right Door (WxH):	20 ins x 32 ins
	Left Door (WxH):	20 ins x 32 ins
Ⓔ	Hot Water Coil	
	Coil Model:	5WH0001C
	Total Capacity:	0.0 Btu/hr
Ⓕ	Access Section	

Plan/Elevation - No Ends	Unit Tag: AHU-26 (Eiland) Final			Sales Office: HTS Texas		
Product: Vision Air Handler	Project Name: Klein ISD Eiland ES AHU replacements			Sales Engineer:		
Model: CAH012GMAM	Jan. 16, 2026	Ver/Rev:	Sheet: 1 of 1	Scale: NTS	Tolerance: +/-0.25"	Dwg Units: in

DAIKIN
13600 Industrial Park Blvd, Minneapolis, MN 55441
www.DaikinApplied.com Software Version: 13.91

All opening dimensions have a 1" mounting flange along the inner edge. The actual airflow area of the opening is 2" smaller in each dimension.

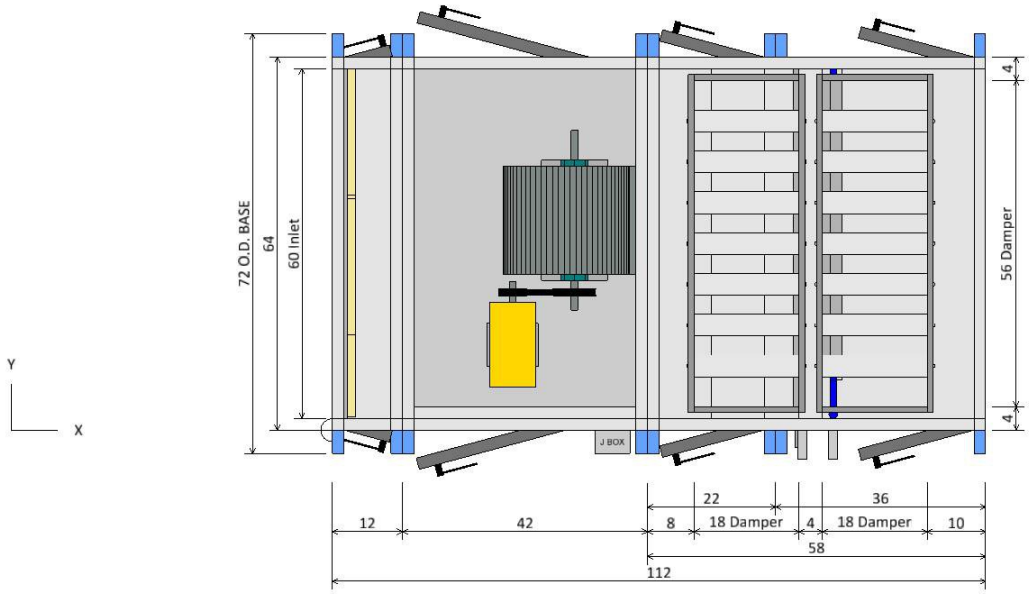

PLAN VIEW

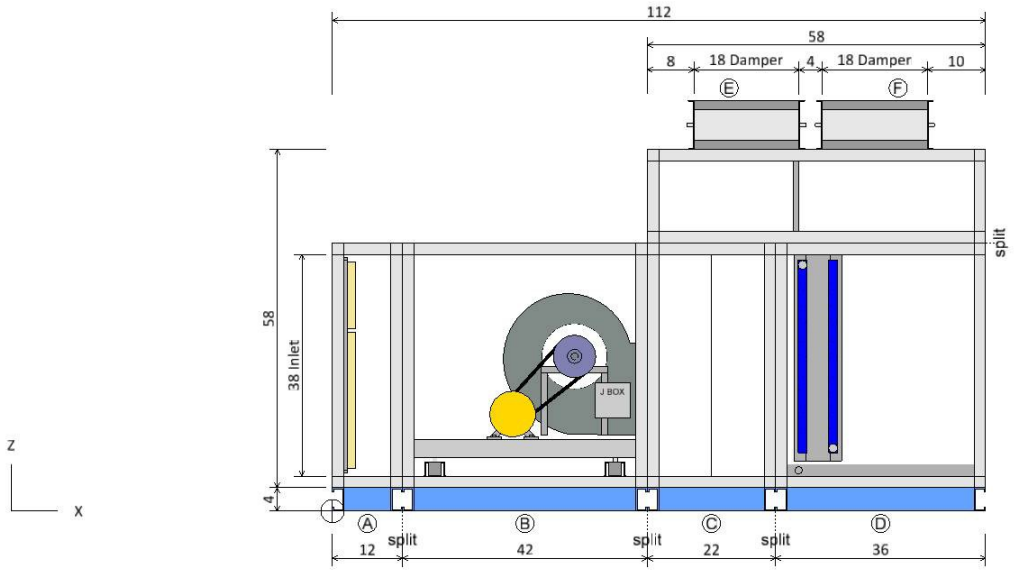

ELEVATION VIEW

Component Key

	Type	X	Y	Z	Wid	Hgt
Ⓐ	Panel Filter Opening	0.00	2.00	6.00	60.00	38.00
Ⓔ	Hot Water Coil MZ hot deck output	62.00	2.00	62.00	56.00	18.00

Note: Dimensions are measured from the origin point.
Note: Openings with or without dampers are recessed into the unit by approximately 1.75 in.

Opening/Damper Connections	Unit Tag: AHU-26 (Eiland) Final			Sales Office: HTS Texas		
Product: Vision Air Handler	Project Name: Klein ISD Eiland ES AHU replacements			Sales Engineer:		
Model: CAH012GMAM	Jan. 16, 2026	Ver/Rev:	Sheet: 1 of 1	Scale: NTS	Tolerance: +/-0.25"	Dwg Units: in

DAIKIN
13600 Industrial Park Blvd, Minneapolis, MN 55441
www.DaikinApplied.com Software Version: 13.91

All opening dimensions have a 1" mounting flange along the inner edge. The actual airflow area of the opening is 2" smaller in each dimension.

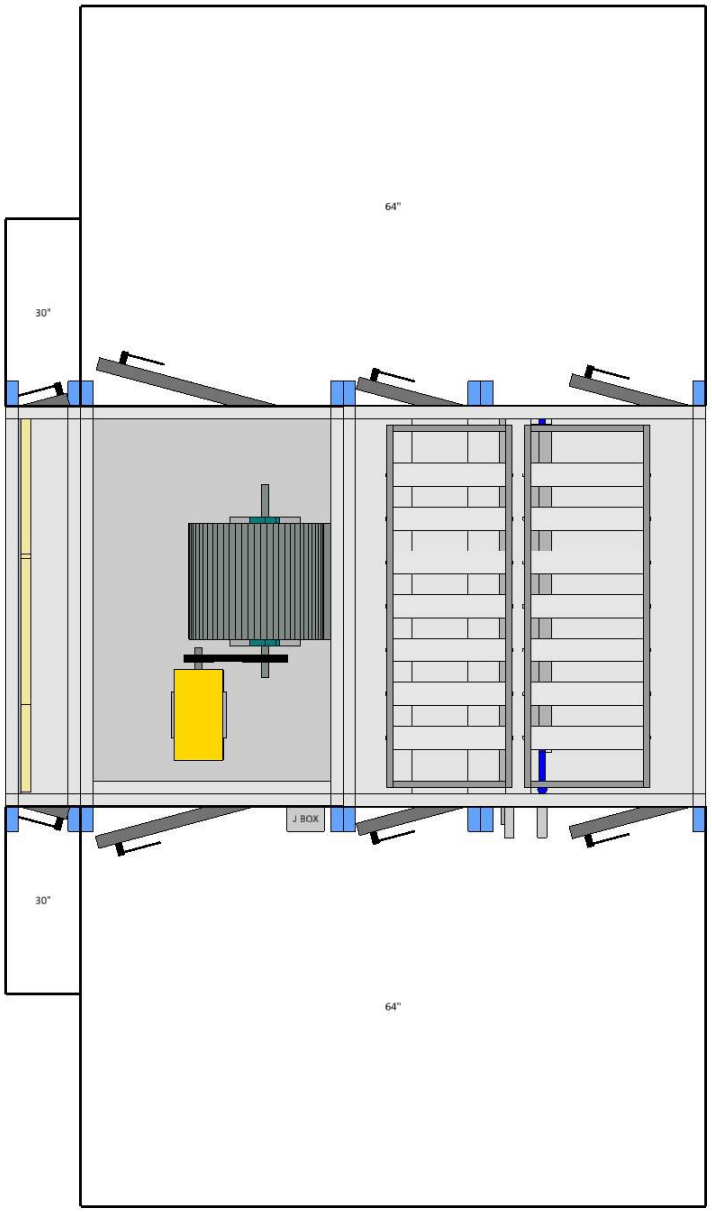

PLAN VIEW

Notes
Check local electrical component service clearance codes for specific distances. Access is only required on one side of the unit.

Service Clearance View	Unit Tag: AHU-26 (Eiland) Final			Sales Office: HTS Texas		
Product: Vision Air Handler	Project Name: Klein ISD Eiland ES AHU replacements			Sales Engineer:		
Model: CAH012GMAM	Jan. 16, 2026	Ver/Rev:	Sheet: 1 of 1	Scale: NTS	Tolerance: +/-0.25"	Dwg Units: in

DAIKIN
13600 Industrial Park Blvd, Minneapolis, MN 55441
www.DaikinApplied.com Software Version: 13.91

All opening dimensions have a 1" mounting flange along the inner edge. The actual airflow area of the opening is 2" smaller in each dimension.

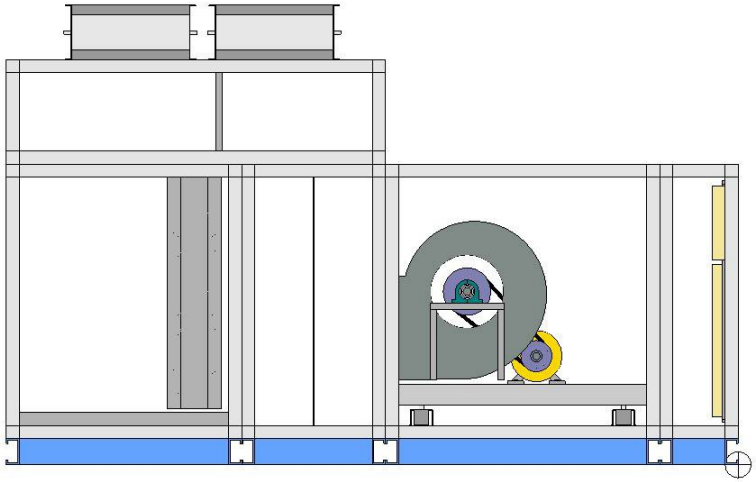

LEFT ELEVATION VIEW

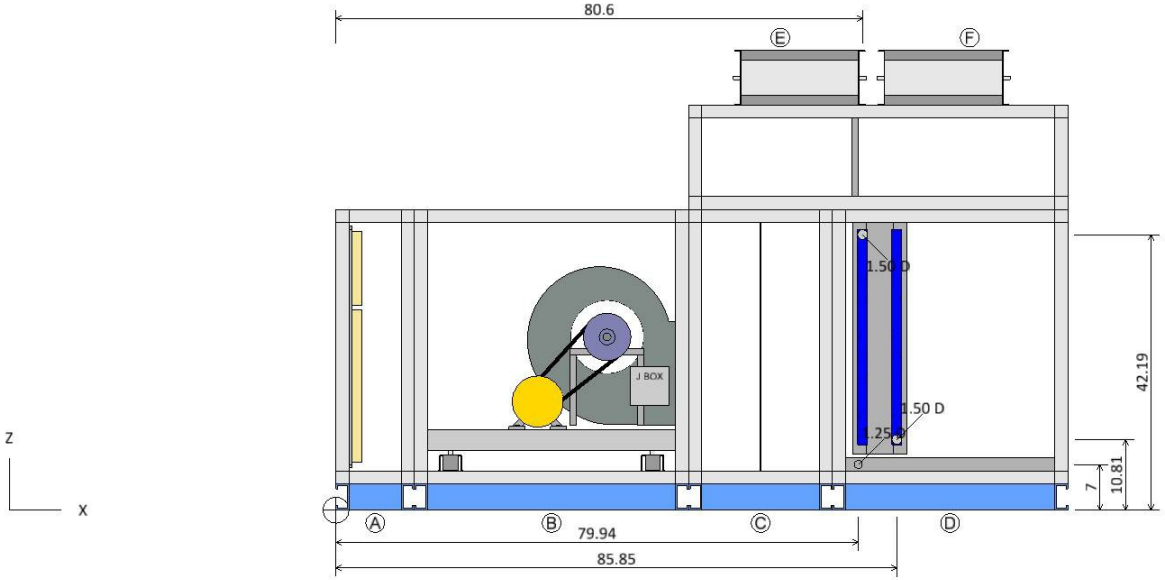

RIGHT ELEVATION VIEW

Coil and Drain Connections

	Type	X	Y	Z	Diam
Ⓓ	Chilled Water coil Condensate drain conn:	79.94	-2.90	7.00	1.25
	Cold water inlet:	85.85	-7.00*	10.81	1.50
	Cold water outlet:	80.60	-7.00*	42.19	1.50

Notes:
Dimensions are measured from the origin point.
* value varies +/- 1 in.

Coil and Drain Connections	Unit Tag: AHU-26 (Eiland) Final			Sales Office: HTS Texas		
Product: Vision Air Handler	Project Name: Klein ISD Eiland ES AHU replacements			Sales Engineer:		
Model: CAH012GMAM	Jan. 16, 2026	Ver/Rev:	Sheet: 1 of 1	Scale: NTS	Tolerance: +/-0.25"	Dwg Units: in

DAIKIN
13600 Industrial Park Blvd, Minneapolis, MN 55441
www.DaikinApplied.com Software Version: 13.91

All opening dimensions have a 1" mounting flange along the inner edge. The actual airflow area of the opening is 2" smaller in each dimension.

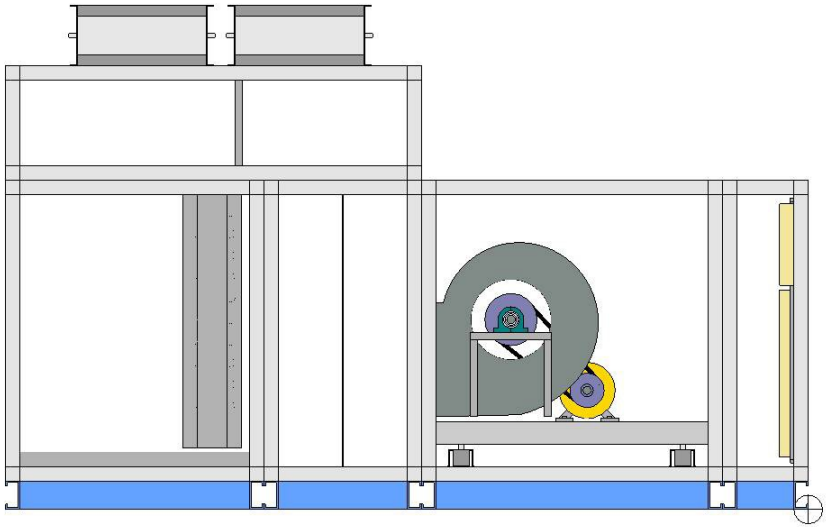

LEFT ELEVATION VIEW

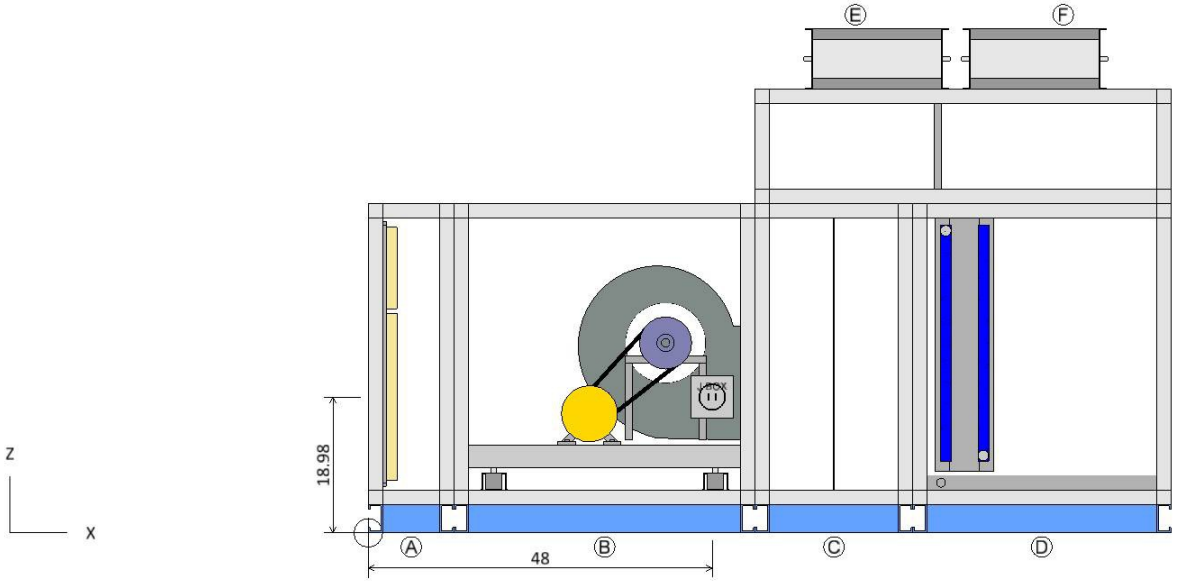

RIGHT ELEVATION VIEW

Component Key

	Type	X	Y	Z	Volts	Phase
Ⓑ	Supply Fan Fan	48.00	0.00	18.98	460	3

Note: Dimensions are measured from the origin point.

Electrical Connections	Unit Tag: AHU-26 (Eiland) Final			Sales Office: HTS Texas		
Product: Vision Air Handler	Project Name: Klein ISD Eiland ES AHU replacements			Sales Engineer:		
Model: CAH012GMAM	Jan. 16, 2026	Ver/Rev:	Sheet: 1 of 1	Scale: NTS	Tolerance: +/-0.25"	Dwg Units: in

DAIKIN
13600 Industrial Park Blvd, Minneapolis, MN 55441
www.DaikinApplied.com Software Version: 13.91

All opening dimensions have a 1" mounting flange along the inner edge. The actual airflow area of the opening is 2" smaller in each dimension.

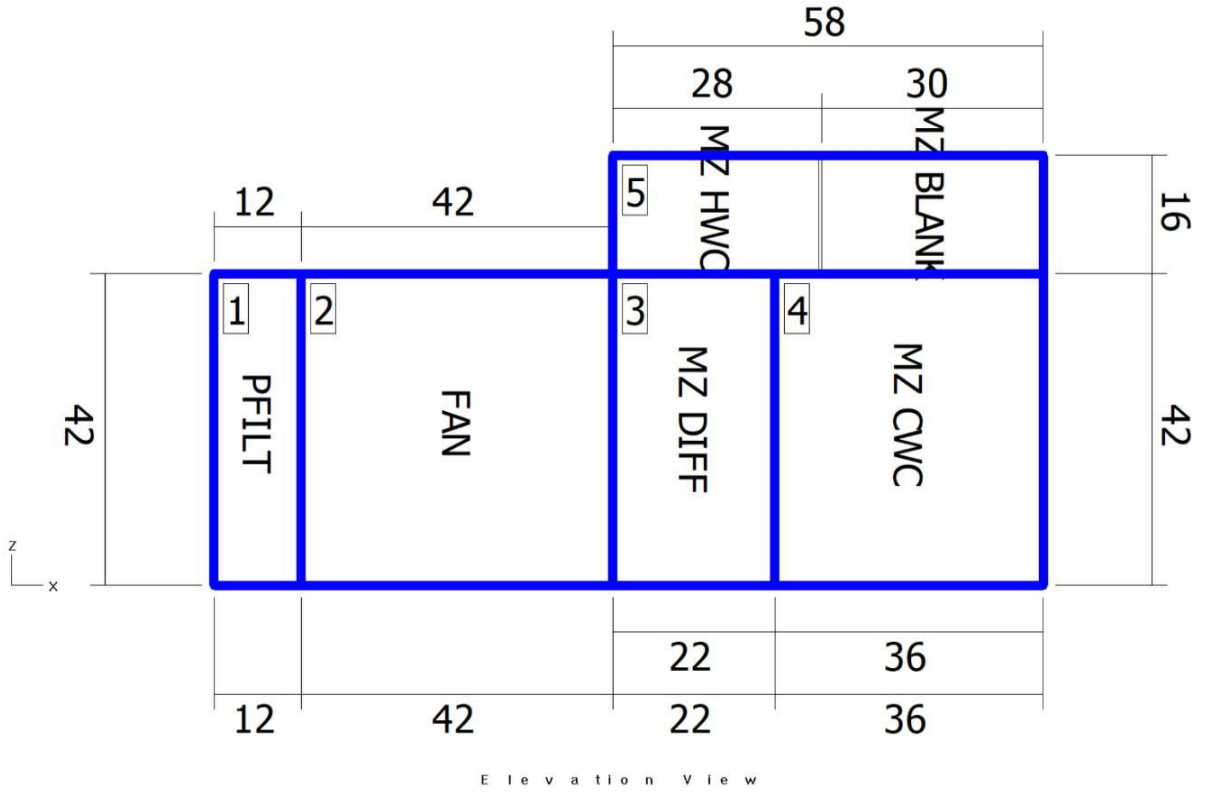

Elevation View

Shipping Sections

Section	Weight (lb)	X	Y	Z
Section 1	224.58	12	64	42
Section 2	834.54	42	64	42
Section 3	237.22	22	64	42
Section 4	756.60	36	64	42
Section 5	305.57	58	64	16
Total Unit	2358.51	112	64	58

Note: Base rails, curb ready base, coil connectors, drain connectors, and control boxes not included in height X, Y, Z dimensions.
Shipping section may be 2" longer in air flow direction due to internal splice joint.
Vertical multizone section : Add 8.38" to section height if dampers are installed.

Shipping Sections	Unit Tag: AHU-26 (Eiland) Final			Sales Office: HTS Texas		
Product: Vision Air Handler	Project Name: Klein ISD Eiland ES AHU replacements			Sales Engineer:		
Model: CAH012GMAM	Jan. 16, 2026	Ver/Rev:	Sheet: 1 of 1	Scale: NTS	Tolerance: +/-0.25"	Dwg Units: in

DAIKIN
13600 Industrial Park Blvd, Minneapolis, MN 55441
www.DaikinApplied.com Software Version: 13.91

All opening dimensions have a 1" mounting flange along the inner edge. The actual airflow area of the opening is 2" smaller in each dimension.

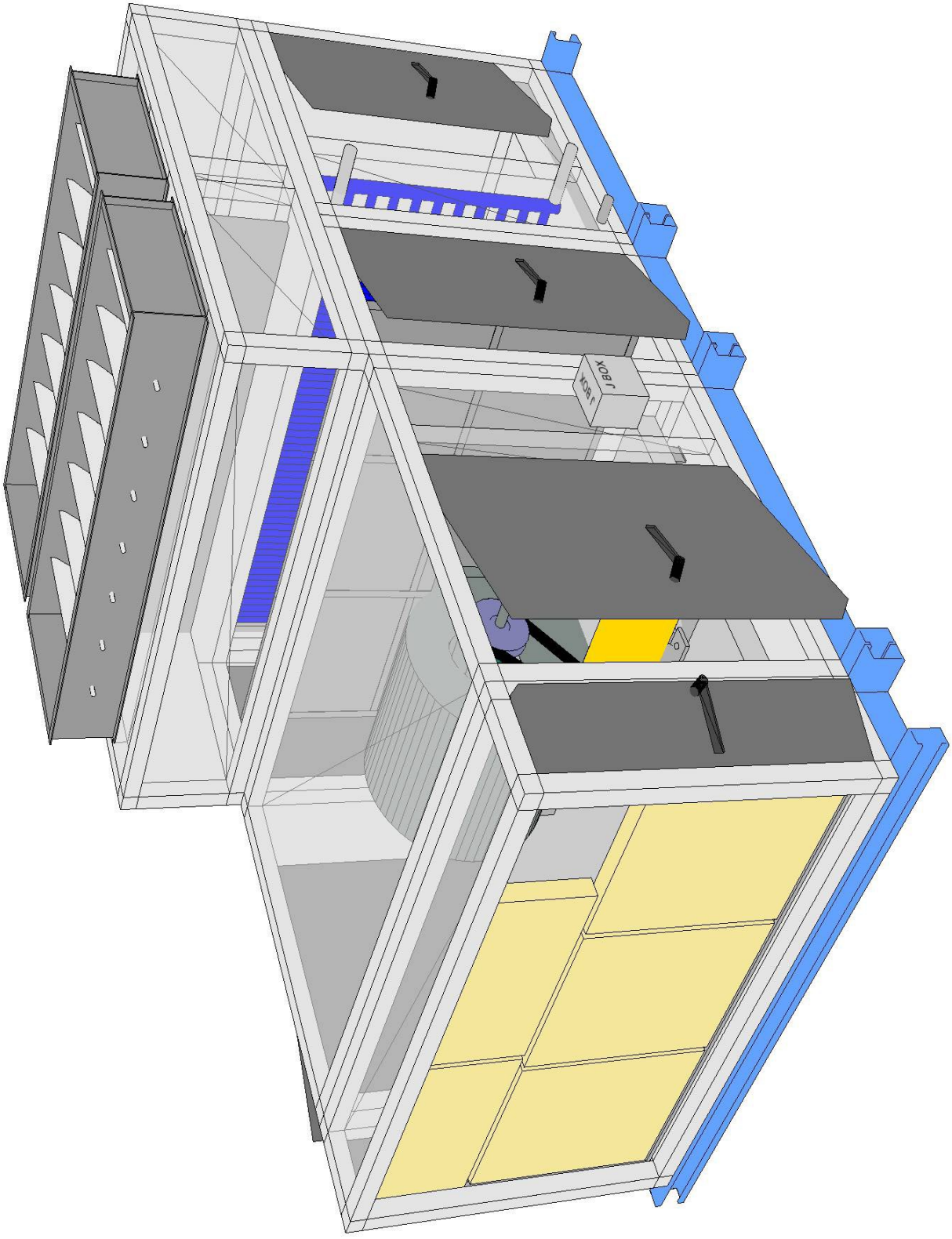

Product Drawing

Unit Tag: AHU-26 (Eiland) Final		Sales Office: HTS Texas	
Project Name: Klein ISD Eiland ES AHU replacements		Sales Engineer:	
Jan. 16, 2026	Ver/Rev:	Sheet: 1 of 1	Scale: NTS	Tolerance: +/-0.25"	Dwg Units: in

DAIKIN

13600 Industrial Park Blvd, Minneapolis, MN 55441
www.DaikinApplied.com Software Version: 13.91

Product: Vision Air Handler
Model: CAH012GMAM

All opening dimensions have a 1" mounting flange along the inner edge. The actual airflow area of the opening is 2" smaller in each dimension.

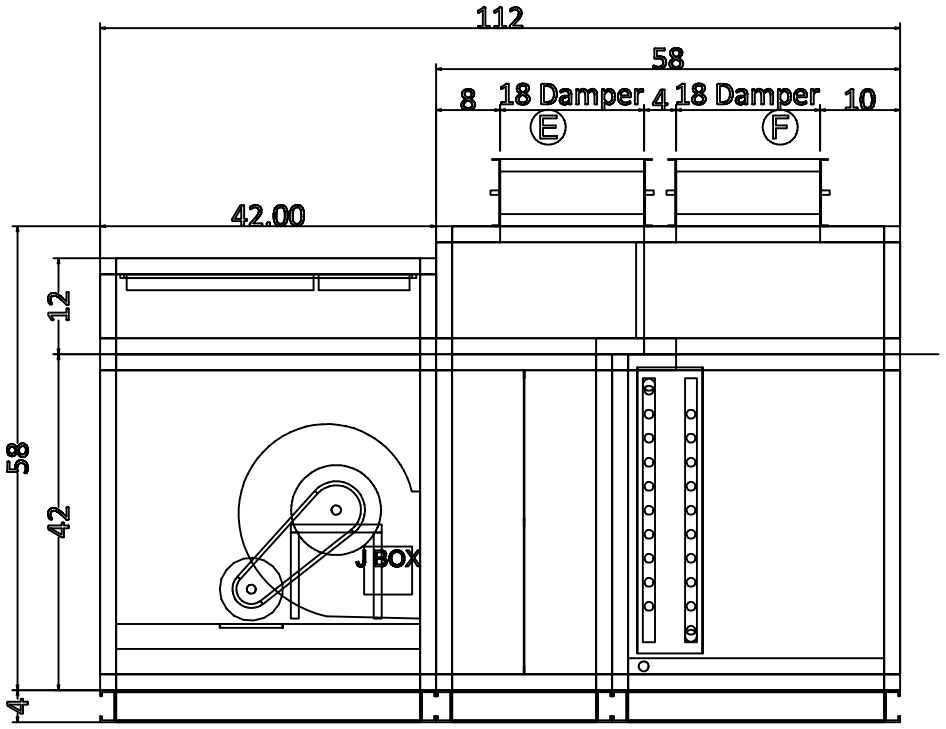

ELEVATION VIEW

Plan/Elevation - No Ends	Unit Tag: AHU-26 (Eiland) Final			Sales Office: HTS Texas			DAIKIN
Product: Vision Air Handler	Project Name: Klein ISD Eiland ES AHU replacements			Sales Engineer:			13600 Industrial Park Blvd, Minneapolis, MN 55441
Model: CAH012GMAM	Jan. 11, 2026	Ver/Rev:	Sheet: 1 of 1	Scale: NTS	Tolerance: +/-0.25"	Dwg Units: in	www.DaikinApplied.com Software Version: 13.91

All opening dimensions have a 1" mounting flange along the inner edge. The actual airflow area of the opening is 2" smaller in each dimension.

Daikin AHU Fan Curve

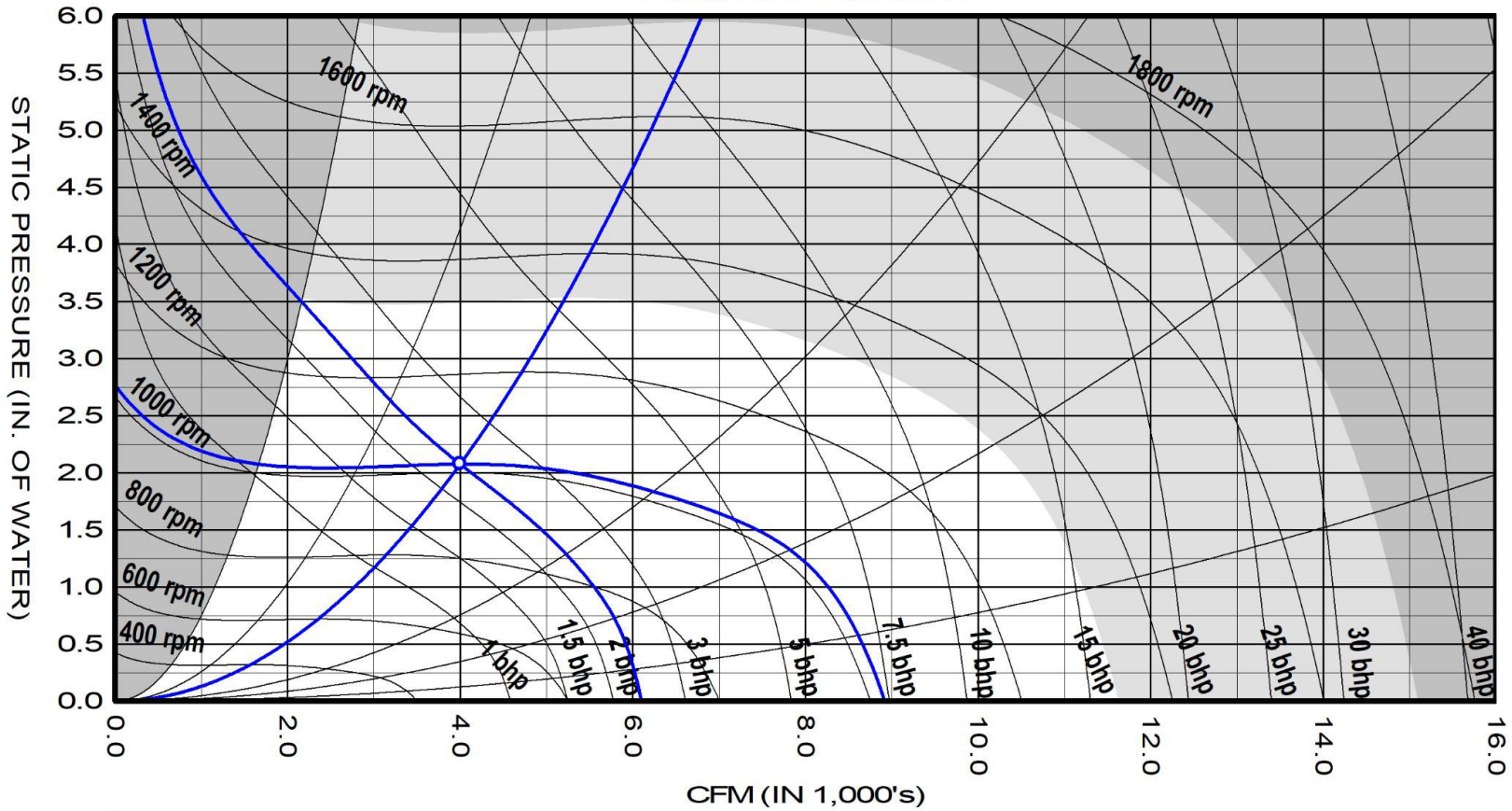

15.00" Forward Curved Supply Fan at Standard Conditions					
Air volume	4000	cfm	Fan speed	1019	rpm
Total static	2.08	insWg	Max speed	1725	rpm
Fan Shaft Power	2.4	bhp	Efficiency	55.4	%
Fan Energy Index(FEI)	1.08				
Unit tagging	AHU-26 (Eiland) Final		Date	January-16-2026	
Job name	Klein ISD Eiland ES AHU replacements		Time	23:47	

Supply fan performance is certified in accordance with the Central Station Air-Handling Unit Certification Program, which is based on AHRI Standard 430.

Job Information	Technical Data Sheet
Job Name	Klein ISD Eiland ES AHU replacements
Date	January 16 2026
Submitted By	Salas O'Brien
Software Version	13.91
Unit Tag	AHU-27 (Eiland) Final

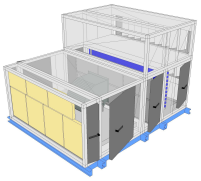

Unit Overview

Model Number	Supply					
	Air Volume cfm	Static Pressure		External Dimensions		
		External inWc	Total inWc	Height in	Width in	Length in
CAH017GMAM	8000	0.80	2.87	42*	84*	110

**Not including base rails, coil connectors, drain connectors and control boxes.*

Unit

Model Number:	CAH017GMAM		
Approval:	ETL Listed / ETL Listed to Canadian Safety Standards (ETL Label / ETLc Label)		
Outer Panel:	18 gauge G90 Galvanized Steel (unpainted)		
Liner:	24 gauge Galvanized Steel (unless noted per section)		
Insulation:	R-13 Injected Foam		
Unit Configuration:	Multizone	**Drive (Handling) Location:**	Left
Base:	4" formed channel	**Wall Thickness:**	2 in
Altitude:	0 ft	**Parts Warranty:**	Additional One Year, Two Year Total

Panel Filter

Component: 1 | Length: 12 in | Shipping Section: 1

Type	Efficiency	Nominal Face Velocity	Actual Face Velocity	Actual Face Area	Air Volume	Filter Loading
Pre Pleat	MERV 13	414 ft/min	442 ft/min	18.1 ft²	8000 cfm	Side

Air Pressure Drop				Number of Filters	Height	Width	Depth
Clean Air	Mean Air	Dirty Air	User Spec				
0.30 inWc	**0.65** inWc	1.00 inWc	N/A	4	24 in	20 in	2 in
				3	12 in	24 in	2 in

Door

Location	Drive Side Door Width	Opp. Drv. Side Door Width	Opening
Both sides	8 in	8 in	Outward

Supply Fan	Component: 2	Length: 42 in	Shipping Section: 2

Fan Performance

Air Volume	Static Pressure			Fan Energy Index(FEI)	Total Input Power	Fan Shaft Power	Fan Wheel Speed		Outlet Velocity
	External	Total	Cabinet				Operating	Maximum	
8000 cfm	0.80 inWc	2.87 inWc	0.00 inWc	0.81	7.6 kW	8.23 BHP	1284 rpm	1725 rpm	3865 ft/min

Fan Data

Fan Type	Blade Type / Class	Quantity of Fans	Wheel Diameter	Number of Blades	Discharge	Motor Location
Centrifugal DWDI	Forward Curved / 2	1	15.00 in	N/A	Top horizontal	To Side of Fan

Motor Data

Power	Electrical Supply	Speed	Efficiency	Enclosure	Frame Size	Supplier	Number of Poles	Lock Rotor Current	Full Load Current
10.0 HP	460/60/3 V/Hz/Phase	1750 rpm	Premium	TEFC	215 T frame	Generic	4	106.62 A	12.50 A

Fan Options

Shaft Grounding Kit:	Provided	Isolator Type:	Spring

Drive Package Data*

Fan Sheave	Motor Sheave	Belt	Number of Belts	Actual Drive S.F.	Bearing Type
2BK80H	2BK60H	B38	2	1.32	Standard - L50 (200K)

**Daikin Applied reserves the right to provide a different but equivalent drive package*

VFD/Starter/Disconnect Data

Selection Type:	External J-Box	Vendor:	Factory Standard
Voltage:	460 V	Height x Width x Depth:	6.00 in x 6.00 in x 4.00 in
Mounting:	Door Side	Enclosure:	NEMA 1

Door

Location	Drive Side Door Width	Opp. Drv. Side Door Width	Opening
Both sides	26 in	30 in	Outward

Two Deck Multizone

Component: 3 | Length: 56 in | Shipping Section: 3 & 4 & 5

Discharge Location	Number of Zones	Multizone APD*	Damper Type	Actuation
Horizontal / Horizontal	9	1.43 inWc	Low leak / Low leak	None - damper mechanically linked

Note : includes coil & balance plate & diffuser

Note : Cabinet height for multizone extends 28 inches above 'External cabinet height' referenced above.
The damper assembly will add 8.38 inches to the cabinet length for horizontal discharge and 8.38 inches to the height for vertical discharge.

Cold Deck Coil

Coil Model	Total Capacity	Sensible Capacity	Number of Coils	Number of Rows	Fins per Inch	Tube Diameter	Tube Spacing (Face x Row)
5WL1106C	325103 Btu/hr	234026 Btu/hr	1	6	11	0.625 in	1.50 in X 1.299 in

Coil Operating Weight	Coil Dry Weight
441 lb	329 lb

Air Volume	Air Temperature				Coil Air Pressure Drop	Finned Height	Finned Length	Face Area	Face Velocity
	Entering		Leaving						
	Dry Bulb	Wet Bulb	Dry Bulb	Wet Bulb					
8000 cfm	79.4 °F	66.0 °F	52.6 °F	52.4 °F	1.19 inWc	33 in	71 in	16.27 ft²	492 ft/min

Water

Entering	Leaving	Flow Rate	Pressure Drop	Velocity	Fluid Volume	Fluid Weight
45.0 °F	56.4 °F	57.00 gpm	9.10 ftHd	3.70 ft/s	13.0 gal	112.00 lb

Connection [Data Per Coil]				Min. Fin Surface Temp.	Min. Tube Wall Surface Temp.	Fouling Factor
Type	Size	Location	Material			
Threaded	2.50 in	Drive side	Carbon steel	45.0 °F	45.0 °F	0.000

Material				Drain Pan	Drain Side	Electro-Fin Coat	Moisture Eliminator
Fin	Tube	Header	Case				
Aluminum .0075 in	Copper .020 in	Copper	Stainless steel	Stainless steel	Drive side	NA	NA

AHRI 410 Certification

Certified in accordance with the AHRI Forced-Circulation Air-Cooling and Air-Heating Coils Certification Program which is based on AHRI Standard 410 within the Range of Standard Rating Conditions listed in Table 1 of the Standard. Certified units may be found in the AHRI Directory at www.ahridirectory.org

Future Hot Deck Coil(56 ins)

Number of Coils	Number of Rows
1	1

Coil Air Pressure Drop	Finned Height	Finned Width	Face Area	Face Velocity
NA inWc	18 in	68 in	8.50 ft²	941 ft/min

Connection Location	Connection Material
Drive side	Carbon steel

Coil Model	Drain Pan	Drain Pan Side
Future Coil (Not Supplied)	NA	NA

AHRI 410 Certification

Coil is NOT certified by AHRI

Door

Location	Drive Side Door Width	Opp. Drv. Side Door Width	Opening
Both sides	18 in	18 in	Outward

Unit Sound Power (dB)

Type	63 Hz	125 Hz	250 Hz	500 Hz	1000 Hz	2000 Hz	4000 Hz	8000 Hz
Radiated:	82	84	76	71	68	58	48	51
Unit Discharge:	92	94	94	92	90	86	86	81
Unit Return:	88	90	90	88	86	82	82	77

Shipping Section Details

Section	Length in	Weight lb	Corner Weights (lb)				Center of Gravity (in)		
			P1	P2	P3	P4	XX	YY	ZZ
1	12	289	65	65	79	79	7	42	19
2	42	1020	304	219	207	291	20	35	19
3	22	296	67	67	81	81	12	42	16
4	34	1055	297	312	231	215	14	43	21
5	56	544	231	248	237	221	27	43	19
Entire Unit	**110**	**3204**	**796**	**744**	**1002**	**1054**	**63**	**41**	**30**

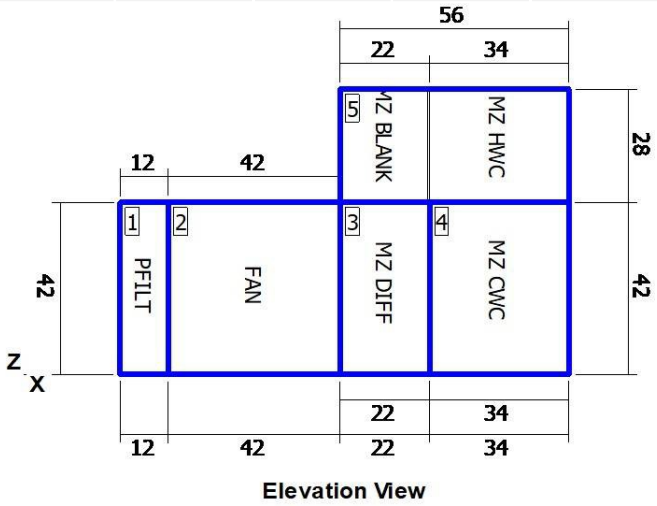

Elevation View

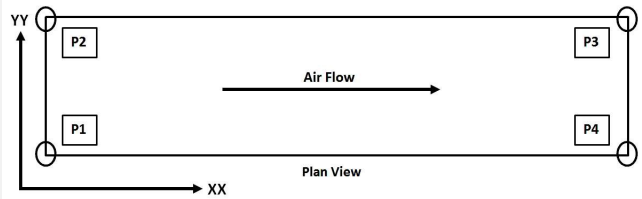

NOTE: Special components aren't included in the corner weights and center of gravity data.

Shipping Protection

Stretch Wrap

NOTE: Shipping protection is not meant for long term storage.

Supply Static Pressure Drop

Component	Option	Static Pressure Drop
Panel Filter	Panel Filter	0.65 insWg
Supply Fan	Cabinet	
Multizone	Multizone	1.43 insWg
External Static	External Static	0.80 insWg
Total Supply Fan Static		2.87 insWg

Minimum Recommended Drain Pan Trap Dimensions

Shipping Section	Component	H
4	Chilled Water coil	1.28

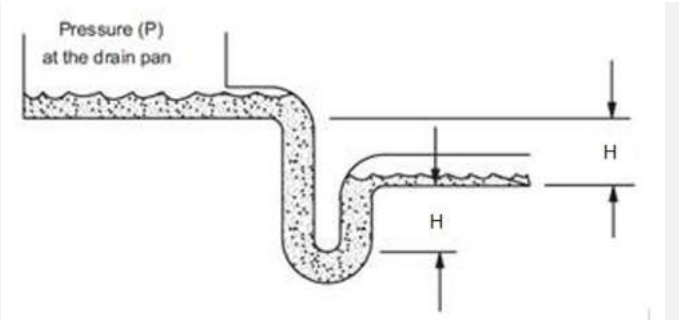

Dimensions provided as a courtesy and are recommended minimums only. Daikin is not responsible for supplying or designing drain pan traps and is not responsible for any damage caused by incorrect trap heights. The dimensions listed above should be reviewed and approved by a licensed plumbing professional.

This calculation is based on an assumption that 0.25 inches of the external static pressure is in the return duct and the remainder is in the supply duct. If actual conditions vary from this assumption then contact Applications for new trap height recommendations.

AHRI Certification

Certified by the AHRI Central Station Air-Handling Unit (AHU) Certification Program, which is based on AHRI Standard 430/431. AHRI certified units are subject to rigorous and continuous testing, have performance ratings independently measured and are third-party verified. Certified units may be found in the AHRI Directory at www.ahridirectory.org.

Notes

Standard
1. As a standalone component, unit meets or exceeds requirements of ASHRAE 90.1 - 2007. The approving authority is responsible for compliance of multi - component building systems.

BQZQ3P

Klein ISD Eiland ES AHU re

93

1/16/2026

AHU-27 (Eiland) Final

Drawing

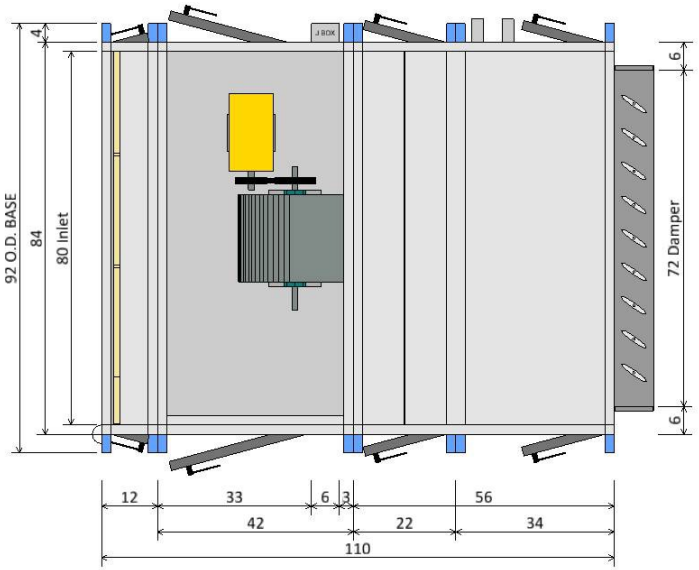

PLAN VIEW

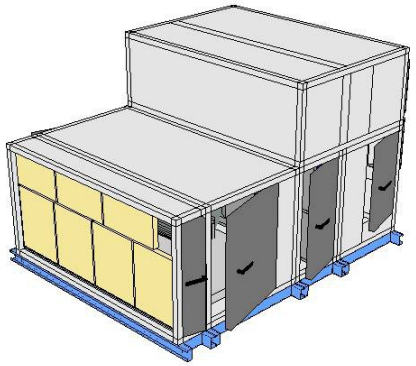

ISOMETRIC VIEW

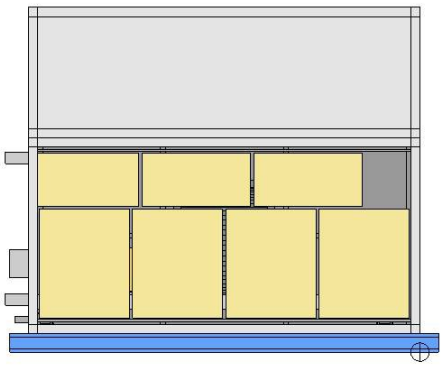

FRONT END VIEW

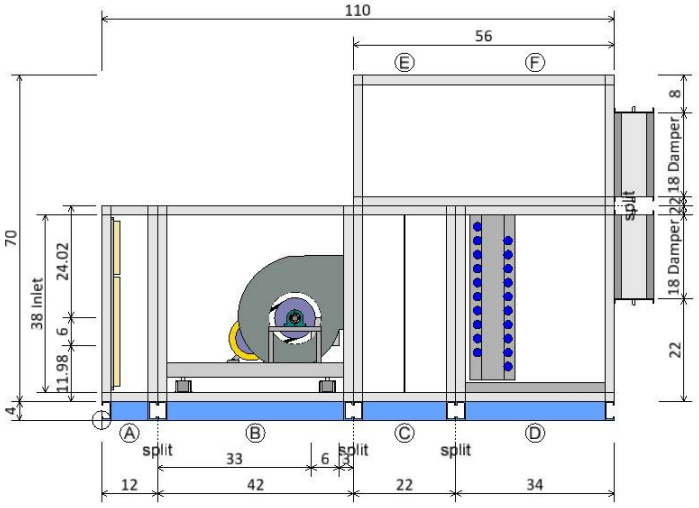

ELEVATION VIEW



REAR END VIEW

Plan/Elevation	Unit Tag: AHU-27 (Eiland) Final			Sales Office: HTS Texas		
Product: Vision Air Handler	Project Name: Klein ISD Eiland ES AHU replacements			Sales Engineer:		
Model: CAH017GMAM	Jan. 16, 2026	Ver/Rev:	Sheet: 1 of 1	Scale: NTS	Tolerance: +/-0.25"	Dwg Units: in

DAIKIN

13600 Industrial Park Blvd, Minneapolis, MN 55441

www.DaikinApplied.com Software Version: 13.91

All opening dimensions have a 1" mounting flange along the inner edge. The actual airflow area of the opening is 2" smaller in each dimension.

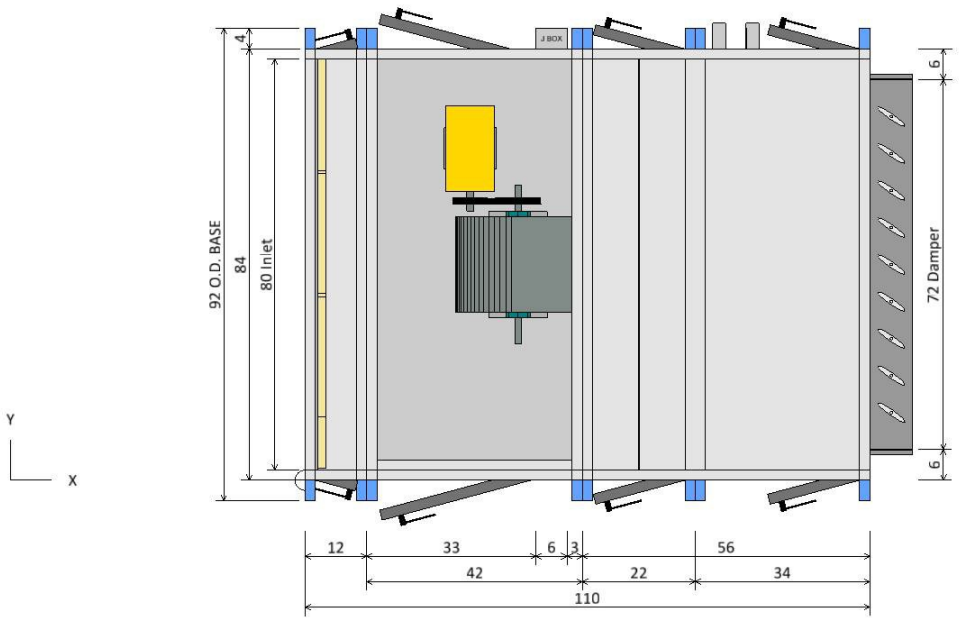

PLAN VIEW

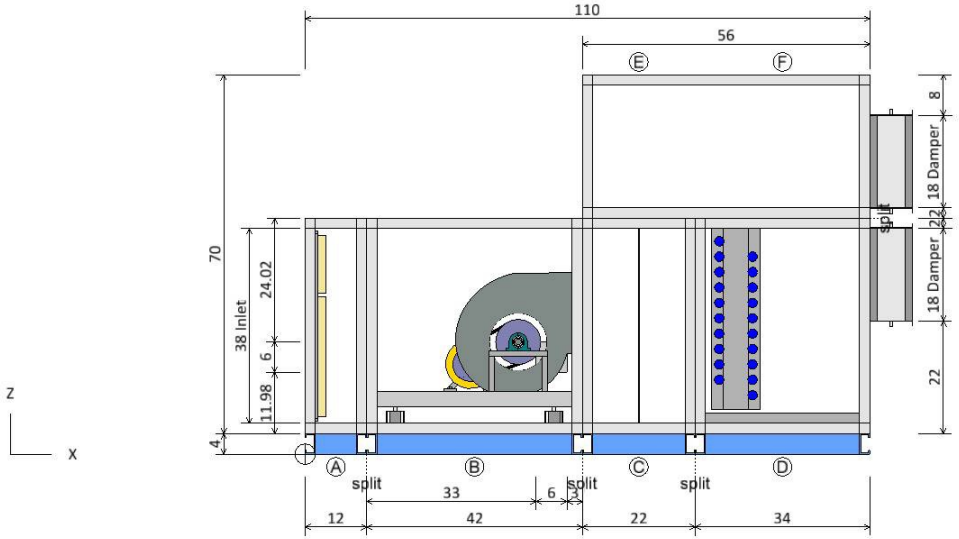

ELEVATION VIEW

Component Key		
Ⓐ	Panel Filter	
	Filter Type:	PrePleat (MERV 13)
	Right Door (WxH):	8 ins x 38 ins
	Left Door (WxH):	8 ins x 38 ins
Ⓑ	Supply Fan	
	Fan Type:	Centrifugal DWDI
	Fan Size (Class):	15 (2)
	Air Flowrate:	8000.0 cfm
	T.S.P:	2.9 insWg
	Motor Power:	10.0 HP
	Right Door (WxH):	30 ins x 38 ins
	Left Door (WxH):	26 ins x 38 ins
Ⓒ	Diffuser	
	Right Door (WxH):	18 ins x 38 ins
	Left Door (WxH):	18 ins x 38 ins
Ⓓ	Chilled Water coil	
	Coil Model:	5WL1106C
	Total Capacity:	325103.0 Btu/hr
	Right Door (WxH):	18 ins x 32 ins
	Left Door (WxH):	18 ins x 32 ins
Ⓔ	Access Section	
Ⓕ	Hot Water Coil	
	Coil Model:	5WH0001C
	Total Capacity:	0.0 Btu/hr

Plan/Elevation - No Ends	Unit Tag: AHU-27 (Eiland) Final			Sales Office: HTS Texas		
Product: Vision Air Handler	Project Name: Klein ISD Eiland ES AHU replacements			Sales Engineer:		
Model: CAH017GMAM	Jan. 16, 2026	Ver/Rev:	Sheet: 1 of 1	Scale: NTS	Tolerance: +/-0.25"	Dwg Units: in

DAIKIN
13600 Industrial Park Blvd, Minneapolis, MN 55441
www.DaikinApplied.com Software Version: 13.91

All opening dimensions have a 1" mounting flange along the inner edge. The actual airflow area of the opening is 2" smaller in each dimension.

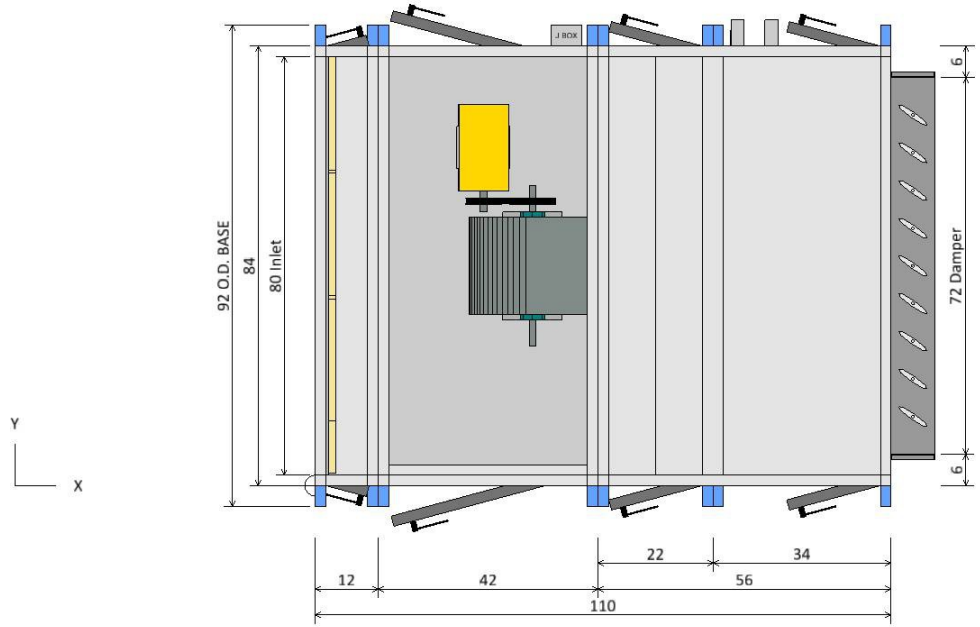

PLAN VIEW

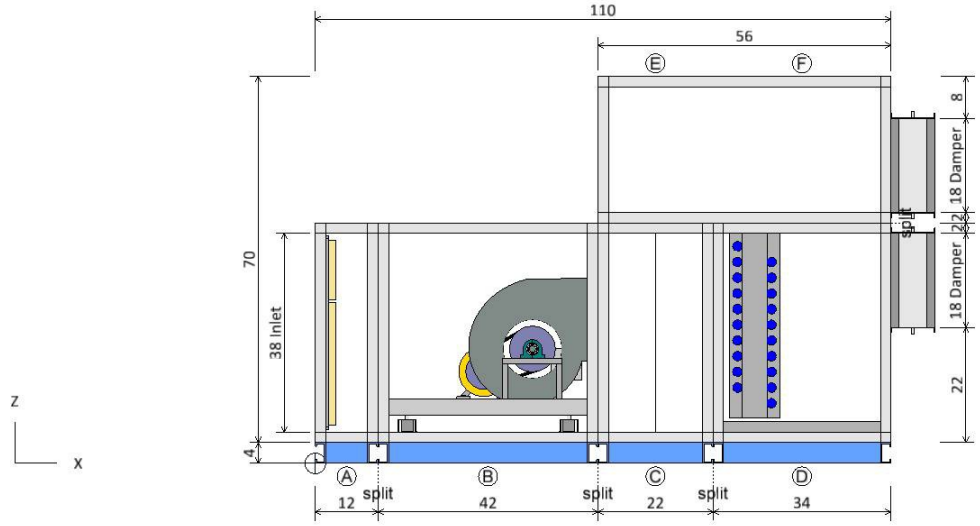

ELEVATION VIEW

Component Key

	Type	X	Y	Z	Wid	Hgt
Ⓐ	Panel Filter Opening	0.00	2.00	6.00	80.00	38.00
Ⓓ	Chilled Water coil MZ cold deck output	118.38	6.00	26.00	72.00	18.00
Ⓕ	Hot Water Coil MZ hot deck output	118.38	6.00	48.00	72.00	18.00

Note: Dimensions are measured from the origin point.
Note: Openings with or without dampers are recessed into the unit by approximately 1.75 in.

Opening/Damper Connections	Unit Tag: AHU-27 (Eiland) Final			Sales Office: HTS Texas		
Product: Vision Air Handler	Project Name: Klein ISD Eiland ES AHU replacements			Sales Engineer:		
Model: CAH017GMAM	Jan. 16, 2026	Ver/Rev:	Sheet: 1 of 1	Scale: NTS	Tolerance: +/-0.25"	Dwg Units: in

DAIKIN
13600 Industrial Park Blvd, Minneapolis, MN 55441
www.DaikinApplied.com Software Version: 13.91

All opening dimensions have a 1" mounting flange along the inner edge. The actual airflow area of the opening is 2" smaller in each dimension.

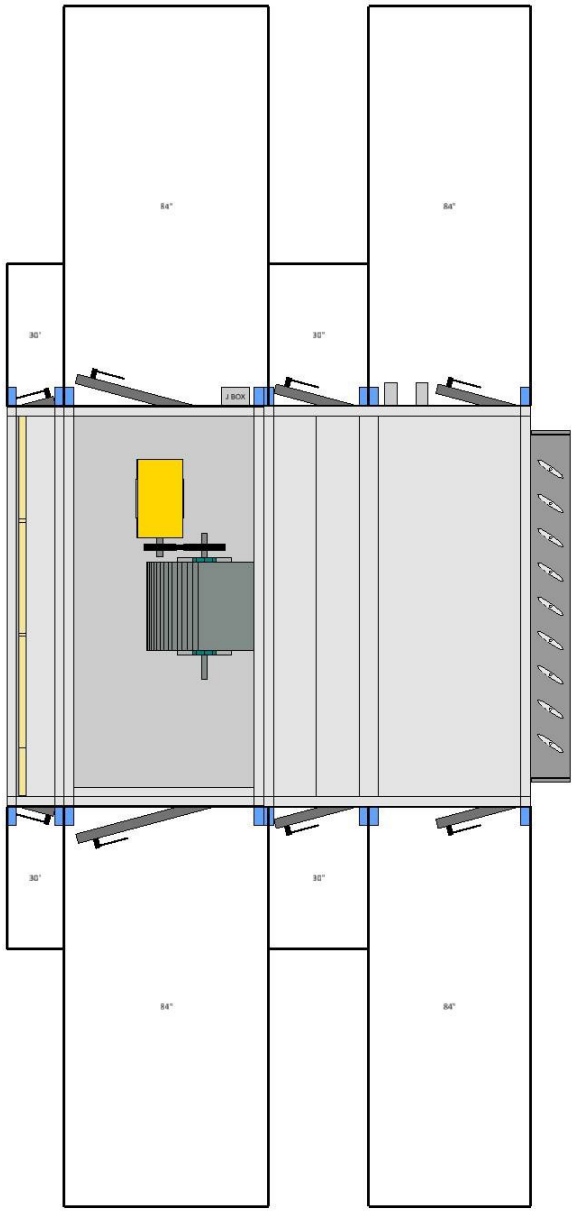

PLAN VIEW

Notes

Check local electrical component service clearance codes for specific distances.

Access is only required on one side of the unit.

Service Clearance View	Unit Tag: AHU-27 (Eiland) Final			Sales Office: HTS Texas		
Product: Vision Air Handler	Project Name: Klein ISD Eiland ES AHU replacements			Sales Engineer:		
Model: CAH017GMAM	Jan. 16, 2026	Ver/Rev:	Sheet: 1 of 1	Scale: NTS	Tolerance: +/-0.25"	Dwg Units: in

DAIKIN
13600 Industrial Park Blvd, Minneapolis, MN 55441
www.DaikinApplied.com Software Version: 13.91

All opening dimensions have a 1" mounting flange along the inner edge. The actual airflow area of the opening is 2" smaller in each dimension.

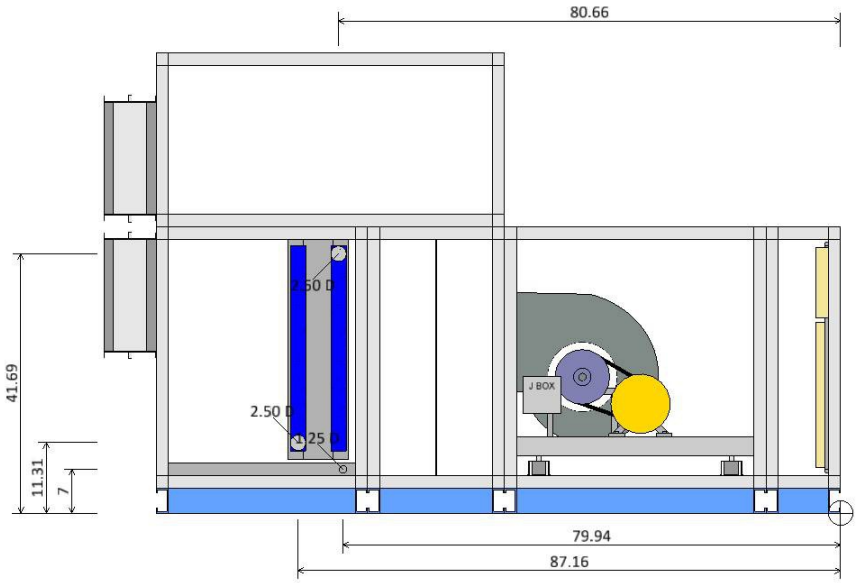

LEFT ELEVATION VIEW

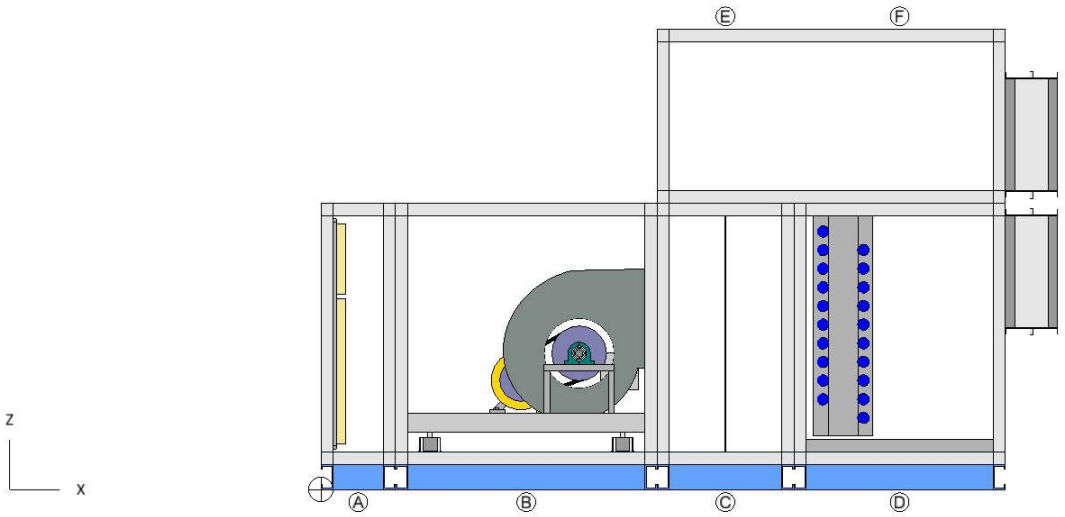

RIGHT ELEVATION VIEW

Coil and Drain Connections

	Type	X	Y	Z	Diam
Ⓓ	Chilled Water coil				
	Condensate drain conn:	79.94	86.90	7.00	1.25
	Cold water inlet:	87.16	91.00*	11.31	2.50
	Cold water outlet:	80.66	91.00*	41.69	2.50

Notes:
Dimensions are measured from the origin point.
* value varies +/- 1 in.

Coil and Drain Connections	Unit Tag: AHU-27 (Eiland) Final			Sales Office: HTS Texas		
Product: Vision Air Handler	Project Name: Klein ISD Eiland ES AHU replacements			Sales Engineer:		
Model: CAH017GMAM	Jan. 16, 2026	Ver/Rev:	Sheet: 1 of 1	Scale: NTS	Tolerance: +/-0.25"	Dwg Units: in

DAIKIN
13600 Industrial Park Blvd, Minneapolis, MN 55441
www.DaikinApplied.com Software Version: 13.91

All opening dimensions have a 1" mounting flange along the inner edge. The actual airflow area of the opening is 2" smaller in each dimension.

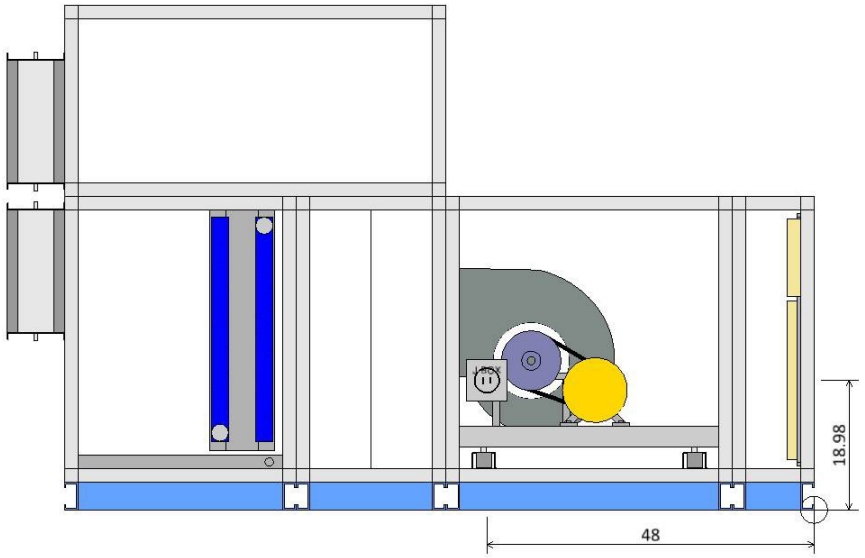

LEFT ELEVATION VIEW

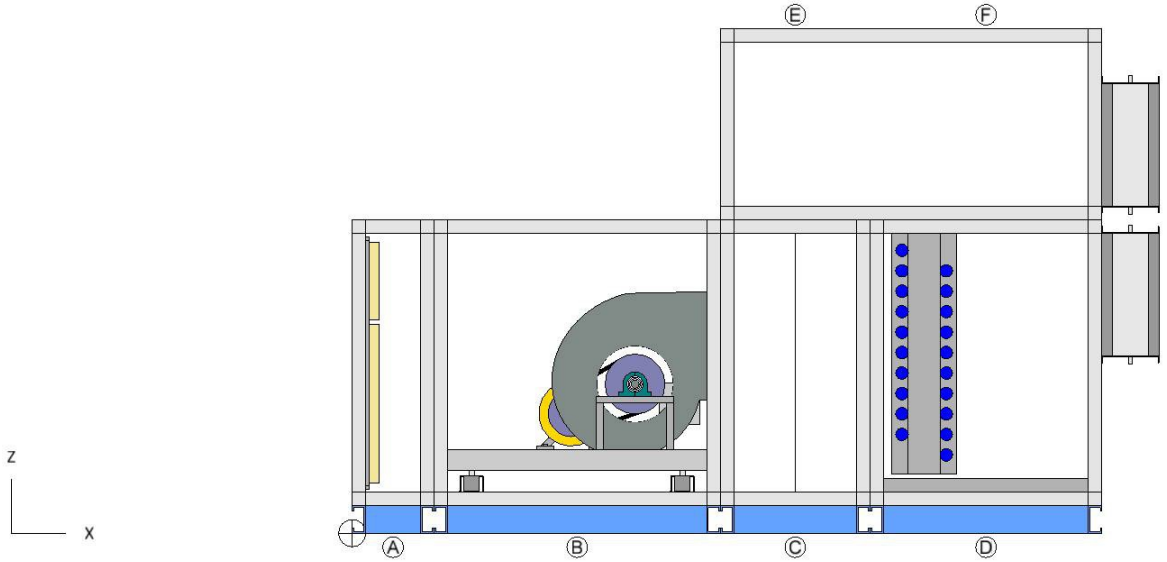

RIGHT ELEVATION VIEW

Component Key

	Type	X	Y	Z	Volts	Phase
Ⓑ	Supply Fan Fan	48.00	84.00	18.98	460	3

Note: Dimensions are measured from the origin point.

Electrical Connections	Unit Tag: AHU-27 (Eiland) Final			Sales Office: HTS Texas		
Product: Vision Air Handler	Project Name: Klein ISD Eiland ES AHU replacements			Sales Engineer:		
Model: CAH017GMAM	Jan. 16, 2026	Ver/Rev:	Sheet: 1 of 1	Scale: NTS	Tolerance: +/-0.25"	Dwg Units: in

DAIKIN
13600 Industrial Park Blvd, Minneapolis, MN 55441
www.DaikinApplied.com Software Version: 13.91

All opening dimensions have a 1" mounting flange along the inner edge. The actual airflow area of the opening is 2" smaller in each dimension.

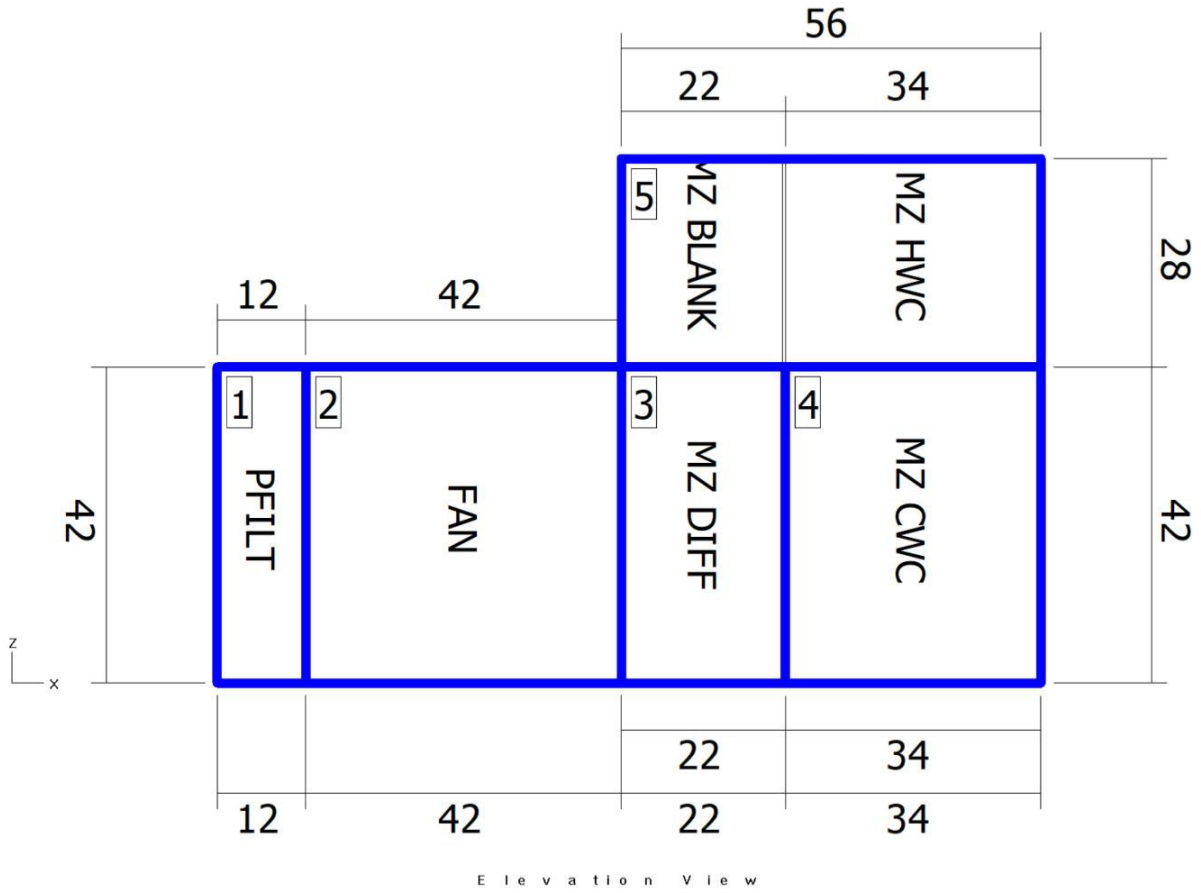

Elevation View

Shipping Sections				
Section	Weight (lb)	X	Y	Z
Section 1	288.59	12	84	42
Section 2	1020.49	42	84	42
Section 3	296.08	22	84	42
Section 4	1054.67	34	84	42
Section 5	544.01	56	84	28
Total Unit	3203.84	110	84	70

Note: Base rails, curb ready base, coil connectors, drain connectors, and control boxes not included in height X, Y, Z dimensions.
Shipping section may be 2" longer in air flow direction due to internal splice joint.
Horizontal multizone section : Add 8.38" to section length if dampers are installed.

Shipping Sections	Unit Tag: AHU-27 (Eiland) Final			Sales Office: HTS Texas		
Product: Vision Air Handler	Project Name: Klein ISD Eiland ES AHU replacements			Sales Engineer:		
Model: CAH017GMAM	Jan. 16, 2026	Ver/Rev:	Sheet: 1 of 1	Scale: NTS	Tolerance: +/-0.25"	Dwg Units: in

DAIKIN
13600 Industrial Park Blvd, Minneapolis, MN 55441
www.DaikinApplied.com Software Version: 13.91

All opening dimensions have a 1" mounting flange along the inner edge. The actual airflow area of the opening is 2" smaller in each dimension.

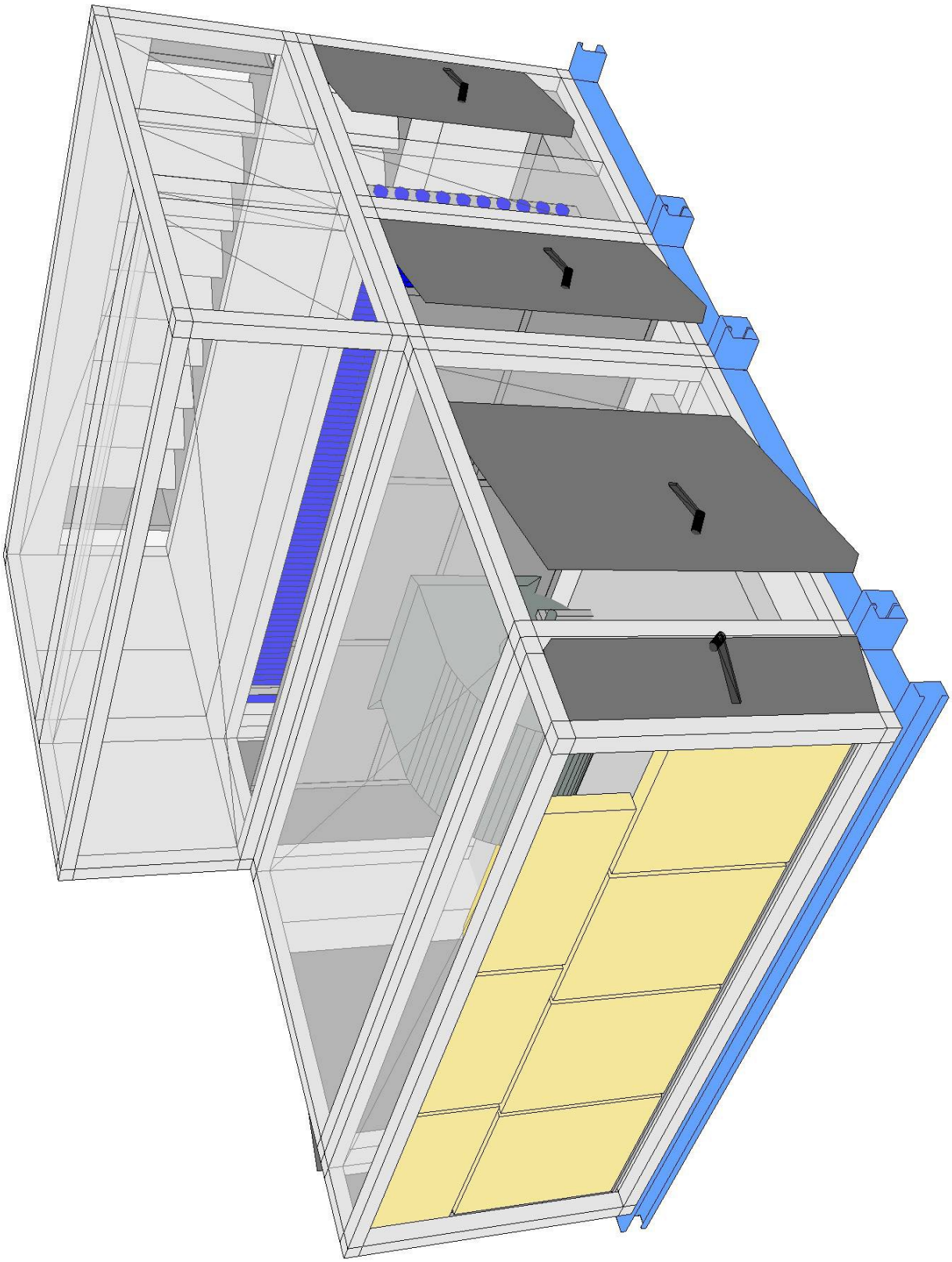

Product Drawing	Unit Tag: AHU-27 (Eiland) Final		Sales Office: HTS Texas	
Product: Vision Air Handler	Project Name: Klein ISD Eiland ES AHU replacements		Sales Engineer:	
Model: CAH017GMAM	Jan. 16, 2026	Ver/Rev:	Sheet: 1 of 1	Scale: NTS	Tolerance: +/-0.25"	Dwg Units: in

All opening dimensions have a 1" mounting flange along the inner edge. The actual airflow area of the opening is 2" smaller in each dimension.

DAIKIN
13600 Industrial Park Blvd, Minneapolis, MN 55441
www.DaikinApplied.com Software Version: 13.91

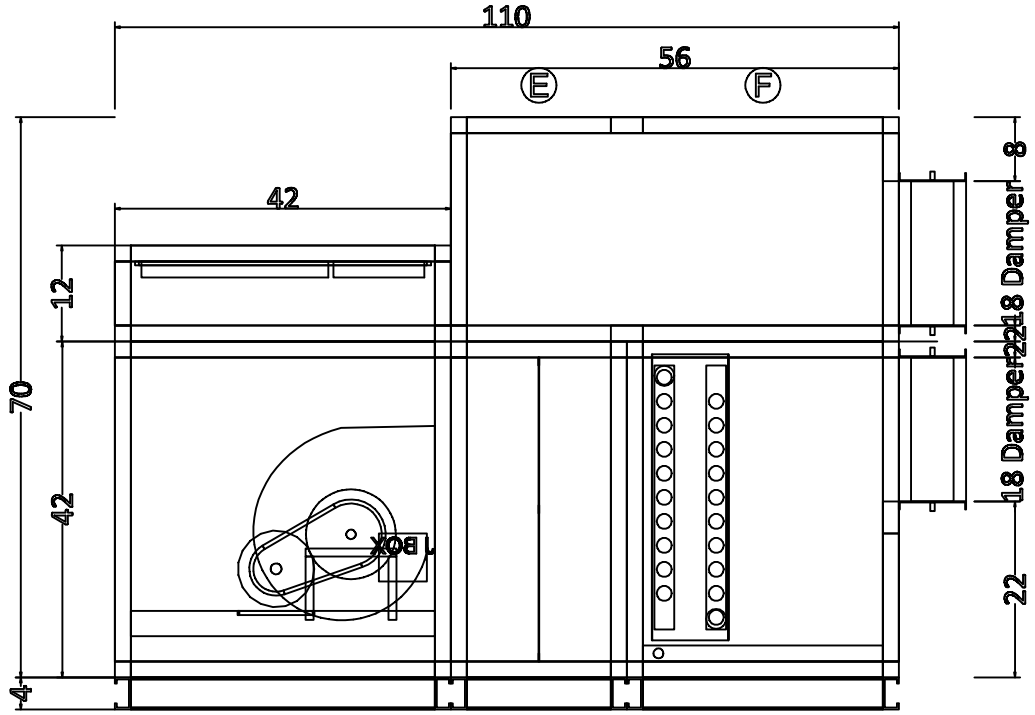

ELEVATION VIEW

Plan/Elevation - No Ends	Unit Tag: AHU-27 (Eiland) Final			Sales Office: HTS Texas			
Product: Vision Air Handler	Project Name: Klein ISD Eiland ES AHU replacements			Sales Engineer:			
Model: CAH017GMAM	Jan. 11, 2026	Ver/Rev:	Sheet: 1 of 1	Scale: NTS	Tolerance: +/-0.25"	Dwg Units: in	

DAIKIN
13600 Industrial Park Blvd, Minneapolis, MN 55441
www.DaikinApplied.com Software Version: 13.91

All opening dimensions have a 1" mounting flange along the inner edge. The actual airflow area of the opening is 2" smaller in each dimension.

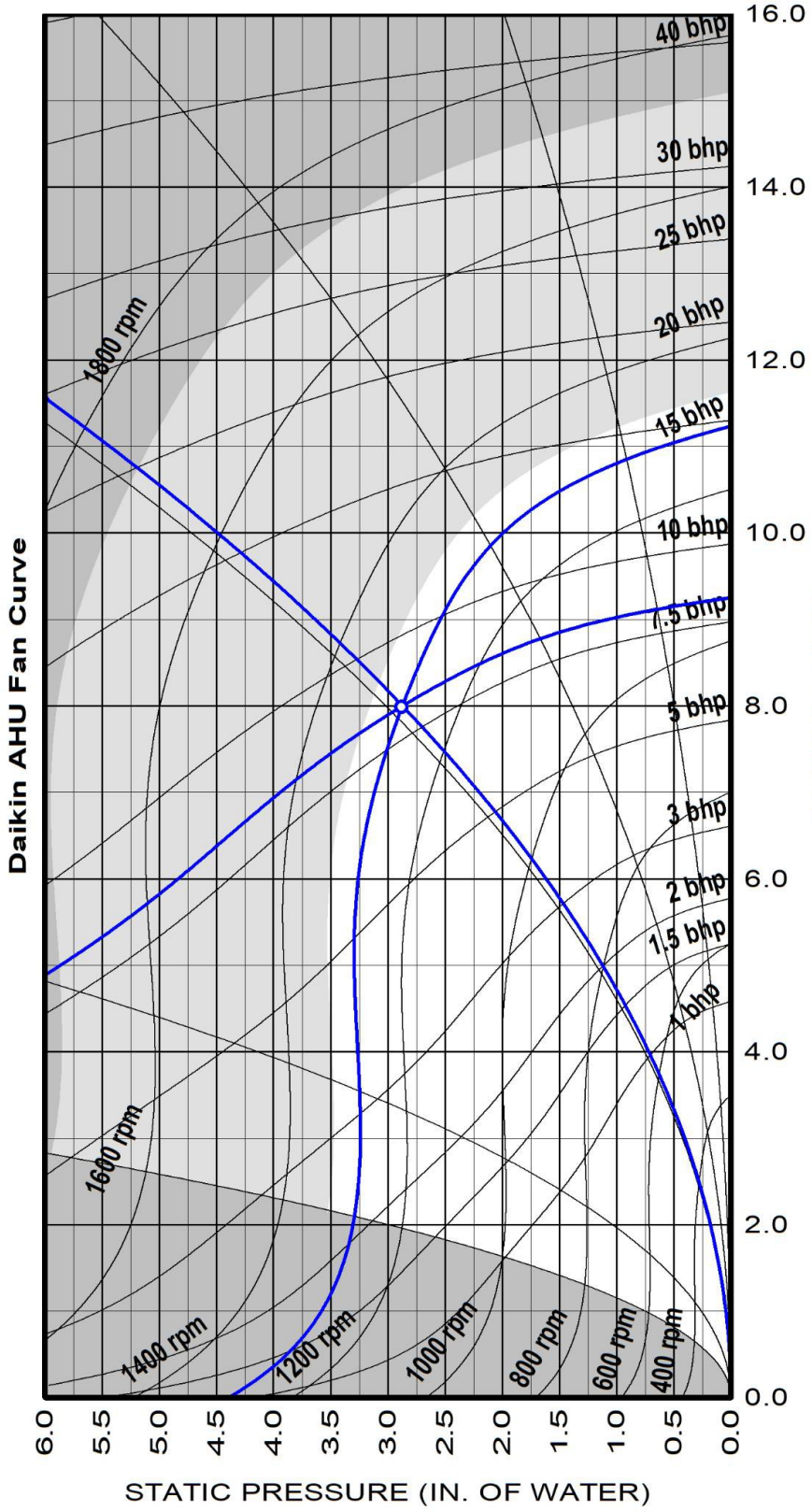

15.00" Forward Curved Supply Fan at Standard Conditions

Air volume	8000	cfm	Fan speed	1284	rpm
Total static	2.87	insWg	Max speed	1725	rpm
Fan Shaft Power	8.2	bhp	Efficiency	44.0	%
Fan Energy Index(FEI)	0.81				

Unit tagging	AHU-27 (Eiland) Final	Date	January-16-2026
Job name	Klein ISD Eiland ES AHU replacements	Time	23:47

Supply fan performance is certified in accordance with the Central Station Air-Handling Unit Certification Program, which is based on AHRI Standard 430.

HTS Texas
3350 Yale Street
Houston, Texas 77018
P 832.328.1010
F 832.328.1460

SUBMITTAL DATA
APPROVAL REQUIRED

PROJECT	:	Klein ISD Eiland 2025 FRP
HTS JOB NUMBER	:	22513311 - MECH
SOLD TO	:	TBD
MECHANICAL CONSULTANT	:	Salas O'Brien
SHIPPING ADDRESS	:	TBD
HTS SALESPERSON	:	Matt McPherson
DATE	:	01/16/2026
REVISION NUMBER	:	00
SPECIFICATION SECTION	:	23 73 13
STANDARD LEAD TIME	:	

TAG	QTY	DESCRIPTION	MODEL	MANUFACTURER
AHU-LOT	21	Air Handling Unit	Preciseline	Daikin Applied

APPROVAL STAMPS



SUBMITTAL DATA

Job Name	Klein ISD Eiland ES AHU replacements
For	
Sold To	
Prepared For	
Customer PO#	
Prepared By	Matt McPherson
Date	1/16/2026

Table of Contents

Daikin Section Divider 3

Technical Data Sheet - AHU-4,6 - Eiland (LH) 4

PreciseLine Drawings - AHU-4,6 - Eiland (LH) 7

Fan Curve - Supply - AHU-4,6 - Eiland (LH) 15

Technical Data Sheet - AHU-5 - Eiland (RH) 16

PreciseLine Drawings - AHU-5 - Eiland (RH) 19

Fan Curve - Supply - AHU-5 - Eiland (RH) 27

Technical Data Sheet - AHU-7,10 - Eiland (RH) 28

PreciseLine Drawings - AHU-7,10 - Eiland (RH) 31

Fan Curve - Supply - AHU-7,10 - Eiland (RH) 39

Technical Data Sheet - AHU-11 - Eiland (LH) 40

PreciseLine Drawings - AHU-11 - Eiland (LH) 43

Fan Curve - Supply - AHU-11 - Eiland (LH) 51

Technical Data Sheet - AHU-12,16 - Eiland (RH) 52

PreciseLine Drawings - AHU-12,16 - Eiland (RH) 55

Fan Curve - Supply - AHU-12,16 - Eiland (RH) 63

Technical Data Sheet - AHU-13 - Eiland (LH) 64

Fan Curve - Supply - AHU-13 - Eiland (LH) 67

Technical Data Sheet - AHU-14,18,24 - Eiland (RH) 68

PreciseLine Drawings - AHU-14,18,24 - Eiland (RH) 71

Fan Curve - Supply - AHU-14,18,24 - Eiland (RH) 79

Technical Data Sheet - AHU-15,19,25 - Eiland (LH) 80

PreciseLine Drawings - AHU-15,19,25 - Eiland (LH) 83

Fan Curve - Supply - AHU-15,19,25 - Eiland (LH) 91

Technical Data Sheet - AHU-17 - Eiland (LH) 92

Fan Curve - Supply - AHU-17 - Eiland (LH) 95

Technical Data Sheet - AHU-20 - Eiland (RH) 96

PreciseLine Drawings - AHU-20 - Eiland (RH) 99

Fan Curve - Supply - AHU-20 - Eiland (RH) 107

Technical Data Sheet - AHU-21,23 - Eiland (LH) 108

PreciseLine Drawings - AHU-21,23 - Eiland (LH) 111

Fan Curve - Supply - AHU-21,23 - Eiland (LH) 119

Technical Data Sheet - AHU-22 - Eiland (RH) 120

PreciseLine Drawings - AHU-22 - Eiland (RH) 123

Fan Curve - Supply - AHU-22 - Eiland (RH) 131


DAIKIN

Job Information	*Technical Data Sheet*
Job Name	Klein ISD Eiland ES AHU replacements
Date	1/16/2026
Submitted By	Matt McPherson
Software Version	07.40
Unit Tag	AHU-4,6 - Eiland (LH)
FPA#	PL-250152-1



Unit Overview

Model Number	Voltage V/Hz/Phase	Airflow CFM	External Static Pressure inH_2O	Design Cooling Capacity Btu/hr
BCVD0401	460/60/3	3600	1.50	144424

Unit

Model Number:	BCVD0401
Unit Arrangement:	Vertical
Altitude:	0 ft

Physical

Dimensions and Weight (wet)

Length	Height	Width	Weight
31.0 in	65.5 in	47.5 in	445 lb

Construction

Insulation and Liners:	1" Injected Foam, R-6, Galvanized Steel Liner

Electrical

Field Connection	Unit FLA	Unit MCA	Unit MROPD	SCCR
Disconnect Switch	6.2 A	7.7 A	15 A	5 kA

Filter

Filter Access	Filter Depth	MERV Rating	(Quantity) Height x Width x Depth
Side	2 in	MERV 13	(2) 12 x 24, (2) 20 x 24

Primary Hydronic Coil

Physical

Fins per Inch	Rows	Casing Material	Face Area ft²	Face Velocity ft/min
14	6	Stainless Steel	8.0	448.9

Connection

Size	Type	Location
1.625	SWT	Left Hand

Drain Pan

Material	Connection
Stainless Steel	0.75 in

Performance

Capacity		Air Temperature			
		Entering		Leaving	
Total Btu/hr	Sensible Btu/hr	Dry Bulb °F	Wet Bulb °F	Dry Bulb °F	Wet Bulb °F
144424	94364	78.0	67.0	54.0	54.0

Fluid

Type	Entering Temperature °F	Leaving Temperature °F	Flow Rate gpm	Pressure Drop ft H_2O
Water	45.0	57.6	23.0	3.12

Supply Fan

Performance

Airflow	Total Static Pressure	Fan Speed	Controller Input Signal	Brake Horsepower	Total Input Power	Fan Energy Index	Altitude
3600	3.07 inH_2O	1460 rpm	8.1 VDC	2.66 HP	2.96 HP	1.323	0 ft

Motor

Type	(Qty) Horsepower	Motor Control	(Qty) FLA
FC Direct Drive NEMA Premium Efficiency Motor	(1) 5.0 HP	0-10V Modulating	(1) 6.2 A

Unit Discharge Conditions

AirTemperature

Motor Heat Btu/hr	Unit Leaving Dry Bulb °F	Unit Leaving Wet Bulb °F	Unit Leaving Dewpoint °F
8053	56.1	54.7	53.7

Supply Fan Total Pressure Drop Calculation

External Static Pressure:	1.50 inH_2O
Primary Filter:	0.33 inH_2O
Dirty/Additional Filter:	0.50 inH_2O
Cooling Coil:	0.75 inH_2O
Total Static Pressure (Supply):	3.07 inH_2O

Sound Power

	Sound Power (db)							
Frequency	**63 Hz**	**125 Hz**	**250 Hz**	**500 Hz**	**1 kHz**	**2 kHz**	**4 kHz**	**8 kHz**
Inlet	84	82	77	73	73	67	64	48
Discharge	92	88	85	82	80	77	75	66
Radiated	72	69	64	57	59	60	44	32

Options

Controls	
Overflow Switch:	Factory mounted Overflow Switch

Warranty

Parts:	1 year extended parts only

AHRI Certification

All equipment is rated and certified in accordance with AHRI 430.

Notes

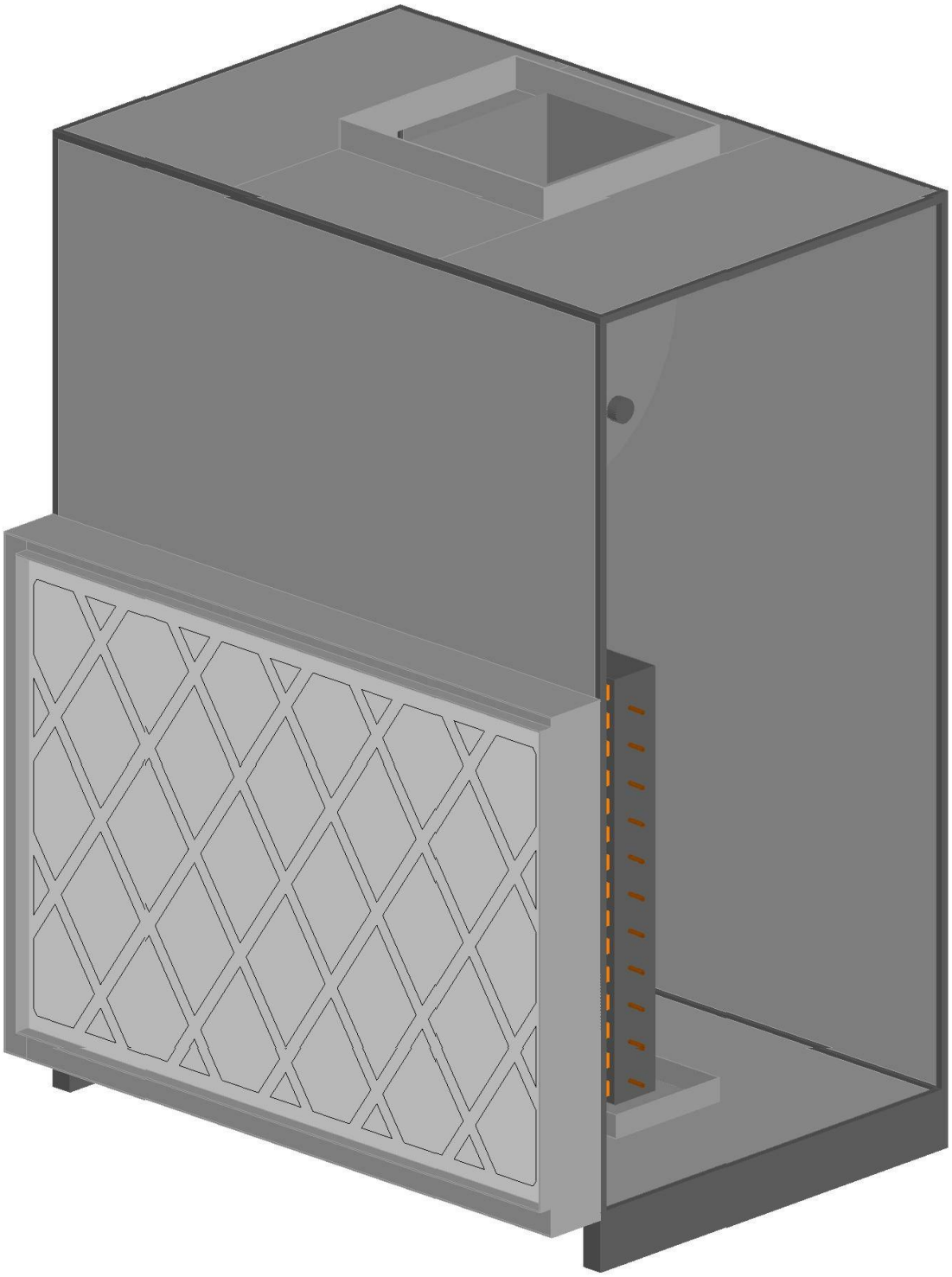

	Unit Tag: AHU-4,6 - Eiland (LH)			DAIKIN		
Product: PreciseLine® Air Handler	Project Name: Klein ISD Eiland ES AHU			13600 Industrial Park Blvd. Minneapolis, MN 55441		
Model: BCVD0401	Sales Office: HTS Texas			www.DaikinApplied.com Software Version: 07.40		
Sales Engineer:	Jan. 16, 2026	Ver/Rev:	Sheet 1 of 1	Scale: NTS	Tolerance: +/-0.25"	Dwg Units: in [mm]

No change to this drawing may be made unless approved in writing by Daikin Applied. Purchaser must determine that the equipment is fit and sufficient for the job specifications.

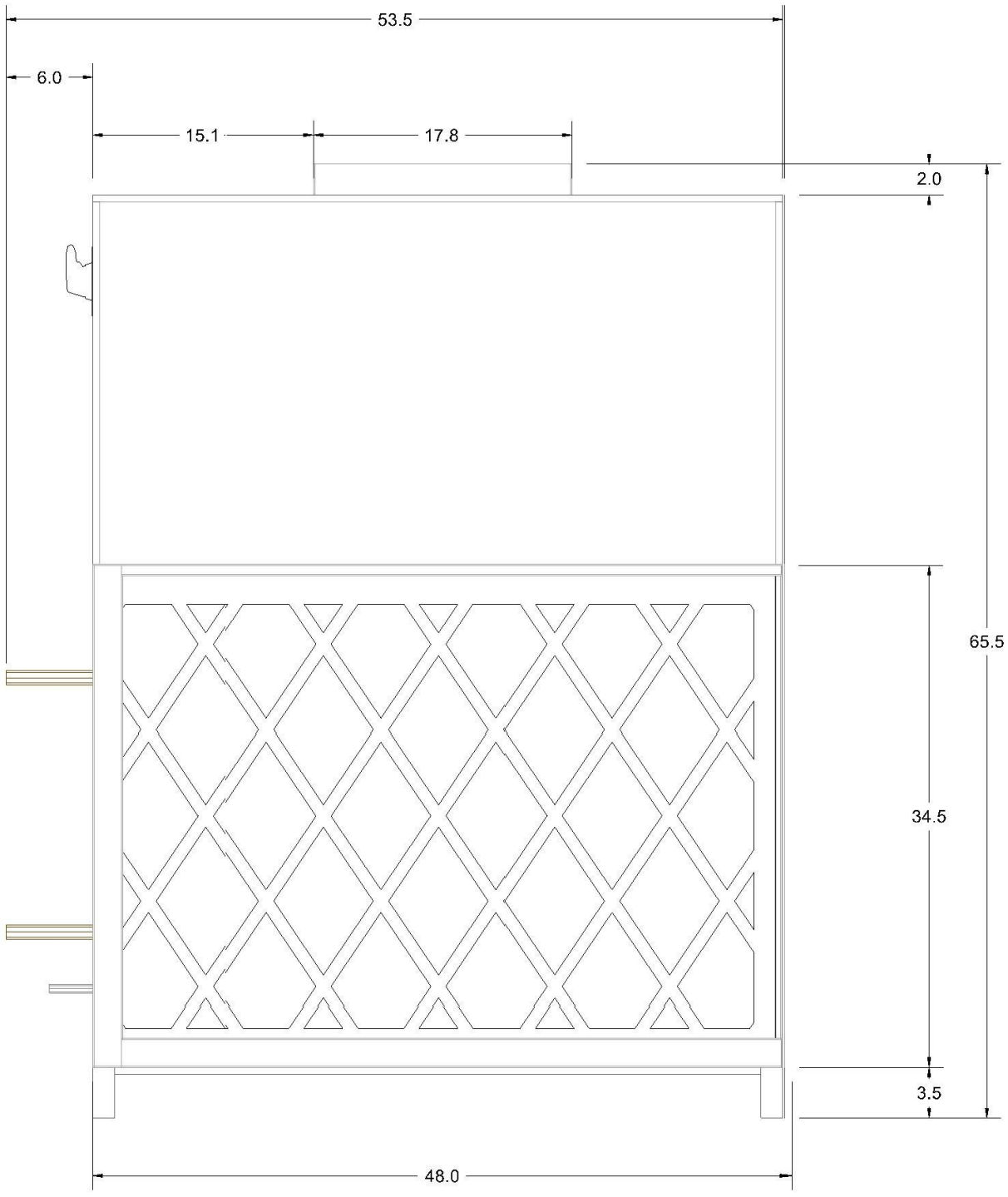

	Unit Tag: AHU-4,6 - Eiland (LH)			DAIKIN		
Product: PreciseLine® Air Handler	Project Name: Klein ISD Eiland ES AHU			13600 Industrial Park Blvd. Minneapolis, MN 55441		
Model: BCVD0401	Sales Office: HTS Texas			www.DaikinApplied.com	Software Version: 07.40	
Sales Engineer:	Jan. 16, 2026	Ver/Rev:	Sheet 1 of 1	Scale: NTS	Tolerance: +/-0.25"	Dwg Units: in [mm]

No change to this drawing may be made unless approved in writing by Daikin Applied. Purchaser must determine that the equipment is fit and sufficient for the job specifications.

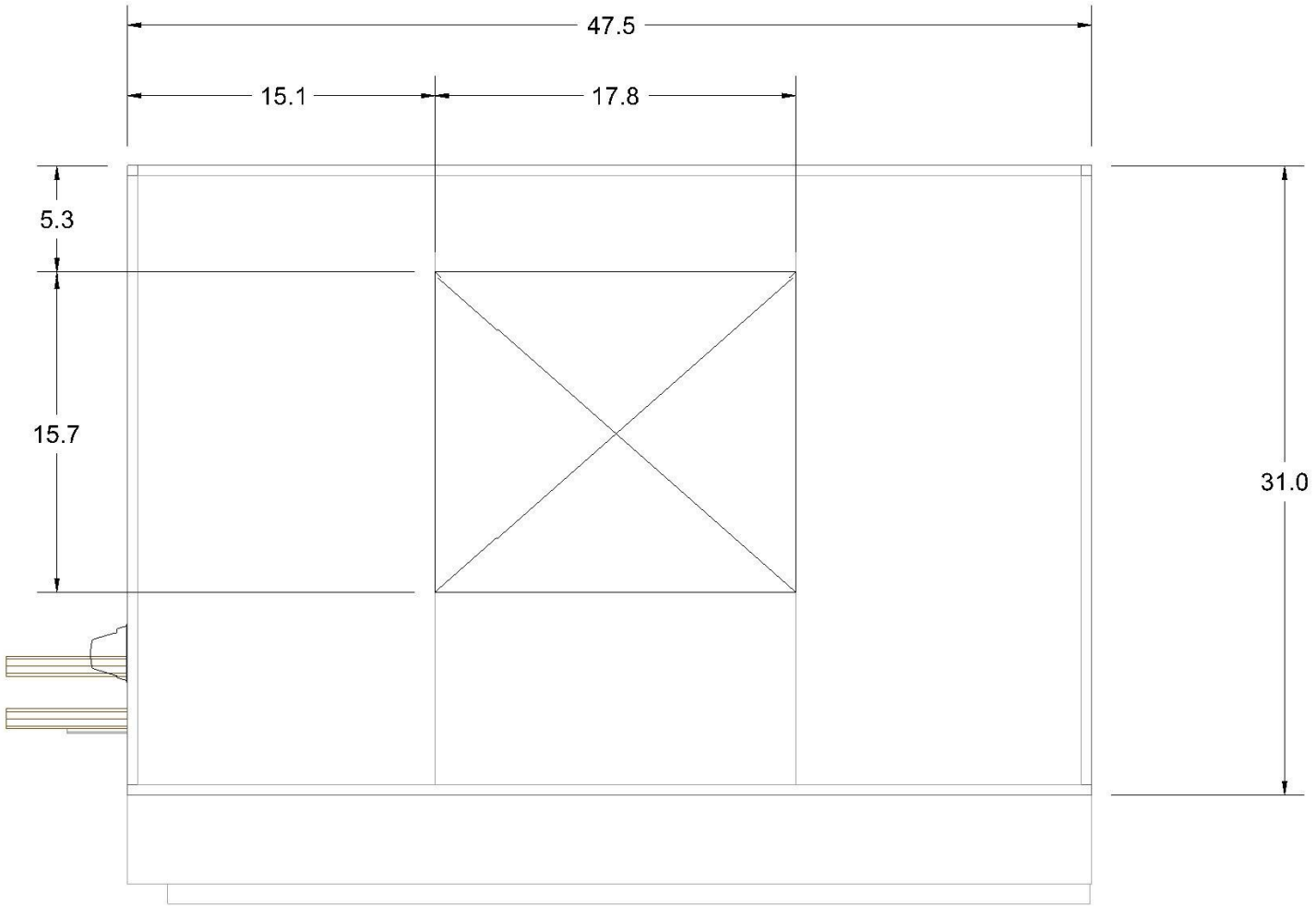

	Unit Tag: AHU-4,6 - Eiland (LH)			Sales Office: HTS Texas			DAIKIN
Product: PreciseLine® Air Handler	Project Name: Klein ISD Eiland ES AHU			Sales Engineer:			13600 Industrial Park Blvd. Minneapolis, MN 55441
Model: BCVD0401	Jan. 16, 2026	Ver/Rev:	Sheet: 1 of 1	Scale: NTS	Tolerance: +/- 0.25"	Dwg Units: in [mm]	www.DaikinApplied.com Software Version: 07.40

No change to this drawing may be made unless approved in writing by Daikin Applied. Purchaser must determine that the equipment is fit and sufficient for the job specifications.

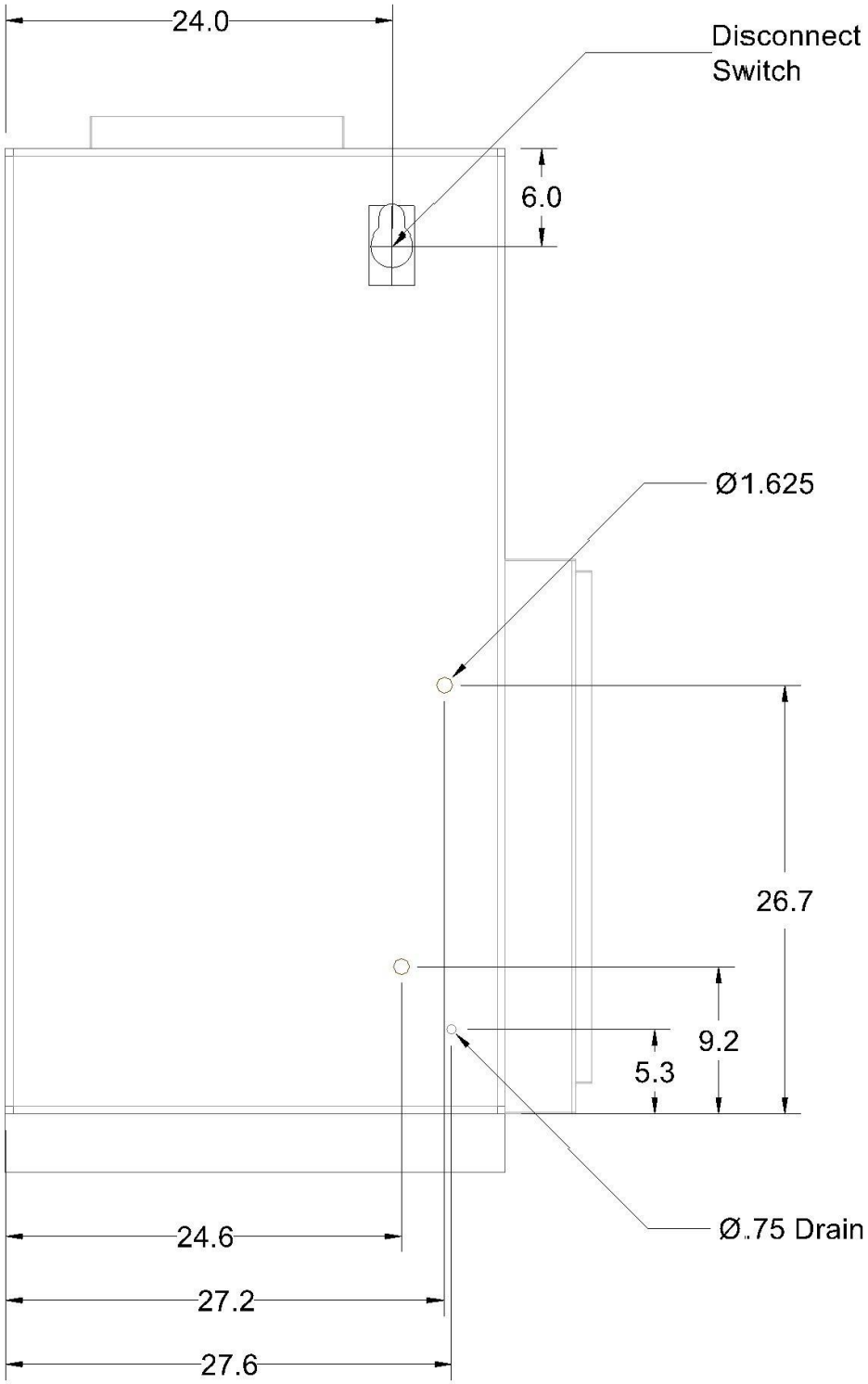

	Unit Tag: AHU-4,6 - Eiland (LH)			DAIKIN		
Product: PreciseLine® Air Handler	Project Name: Klein ISD Eiland ES AHU			13600 Industrial Park Blvd. Minneapolis, MN 55441		
Model: BCVD0401	Sales Office: HTS Texas			www.DaikinApplied.com Software Version: 07.40		
Sales Engineer:	Jan. 16, 2026	Ver/Rev:	Sheet 1 of 1	Scale: NTS	Tolerance: +/-0.25"	Dwg Units: in [mm]

No change to this drawing may be made unless approved in writing by Daikin Applied. Purchaser must determine that the equipment is fit and sufficient for the job specifications.

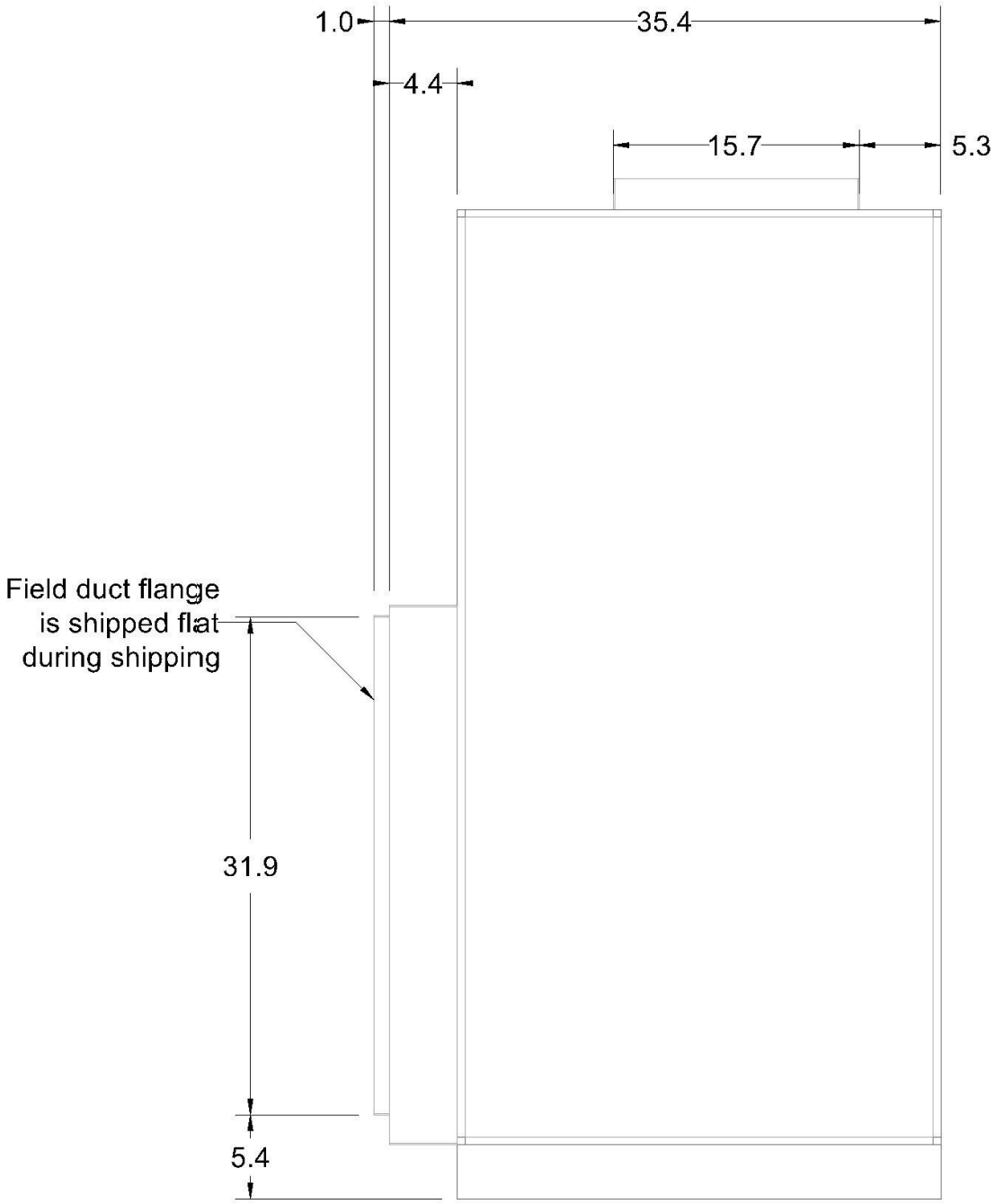

	Unit Tag: AHU-4,6 - Eiland (LH)			DAIKIN		
Product: PreciseLine® Air Handler	Project Name: Klein ISD Eiland ES AHU			13600 Industrial Park Blvd. Minneapolis, MN 55441		
Model: BCVD0401	Sales Office: HTS Texas			www.DaikinApplied.com	Software Version: 07.40	
Sales Engineer:	Jan. 16, 2026	Ver/Rev:	Sheet 1 of 1	Scale: NTS	Tolerance: +/-0.25"	Dwg Units: in [mm]

No change to this drawing may be made unless approved in writing by Daikin Applied. Purchaser must determine that the equipment is fit and sufficient for the job specifications.

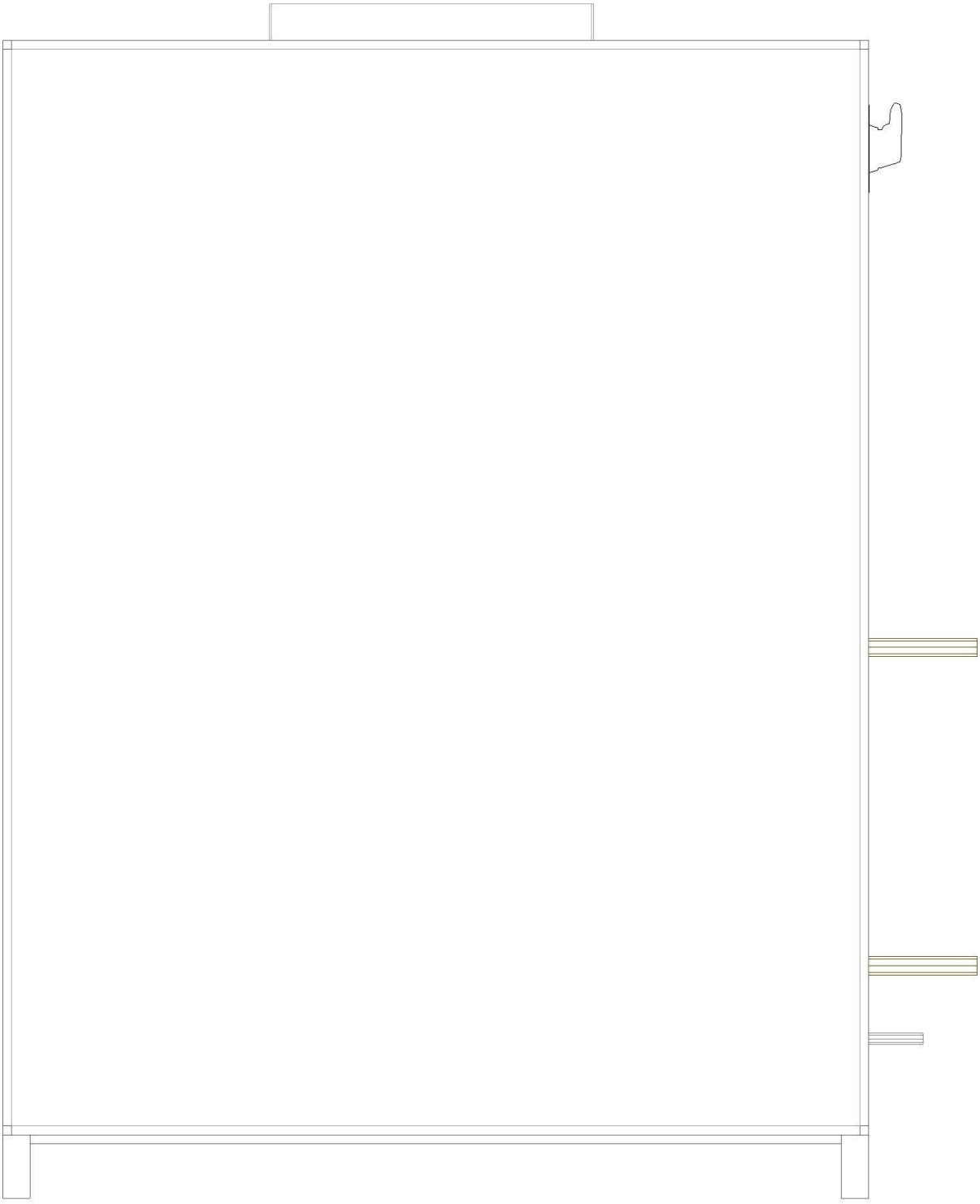

	Unit Tag: AHU-4,6 - Eiland (LH)			DAIKIN		
Product: PreciseLine® Air Handler	Project Name: Klein ISD Eiland ES AHU			13600 Industrial Park Blvd. Minneapolis, MN 55441		
Model: BCVD0401	Sales Office: HTS Texas			www.DaikinApplied.com	Software Version: 07.40	
Sales Engineer:	Jan. 16, 2026	Ver/Rev:	Sheet 1 of 1	Scale: NTS	Tolerance: +/-0.25"	Dwg Units: in [mm]

No change to this drawing may be made unless approved in writing by Daikin Applied. Purchaser must determine that the equipment is fit and sufficient for the job specifications.

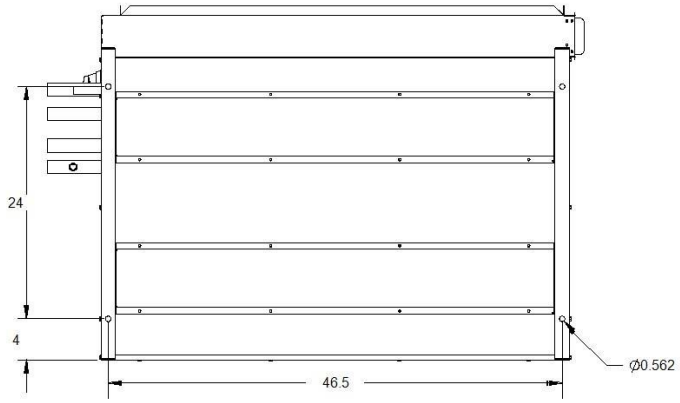

SECTION A-A

CABINET MOUNTING HOLE LOCATIONS

	Unit Tag: AHU-4,6 - Eiland (LH)			Sales Office: HTS Texas			DAIKIN
Product: PreciseLine® Air Handler	Project Name: Klein ISD Eiland ES AHU			Sales Engineer:			13600 Industrial Park Blvd. Minneapolis, MN 55441
Model: BCVD0401	Jan. 16, 2026	Ver/Rev:	Sheet: 1 of 1	Scale: NTS	Tolerance: +/- 0.25"	Dwg Units: in [mm]	www.DaikinApplied.com Software Version: 07.40

No change to this drawing may be made unless approved in writing by Daikin Applied. Purchaser must determine that the equipment is fit and sufficient for the job specifications.

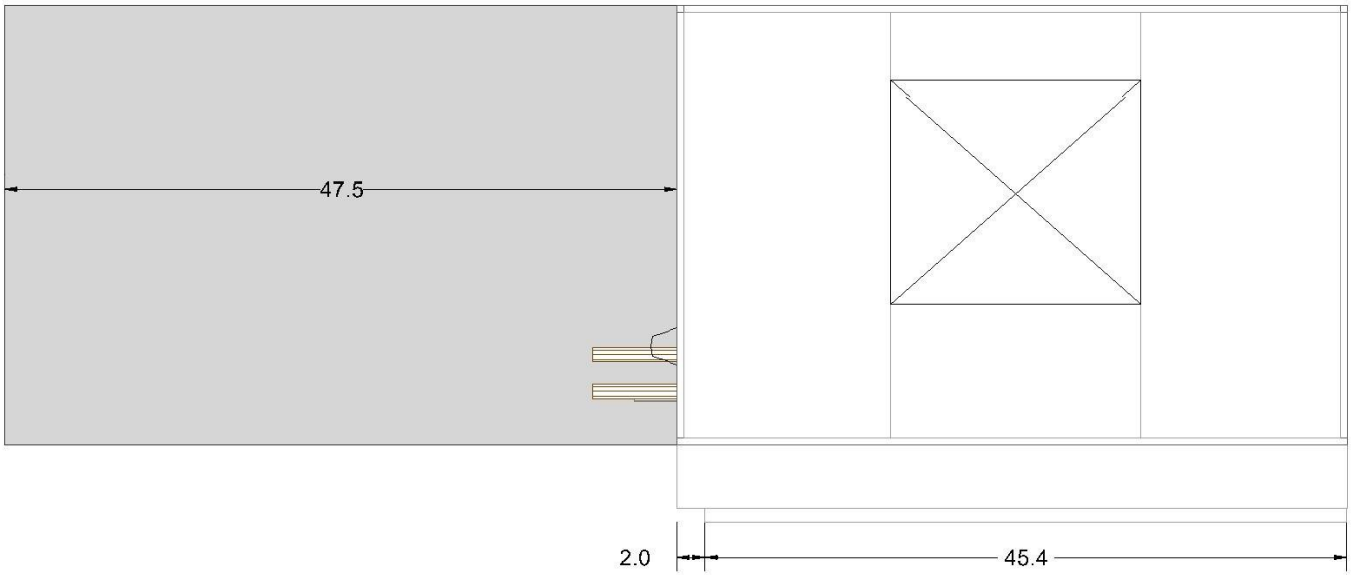

	Unit Tag: AHU-4,6 - Eiland (LH)			Sales Office: HTS Texas			DAIKIN
Product: PreciseLine® Air Handler	Project Name: Klein ISD Eiland ES AHU			Sales Engineer:			13600 Industrial Park Blvd. Minneapolis, MN 55441
Model: BCVD0401	Jan. 16, 2026	Ver/Rev:	Sheet: 1 of 1	Scale: NTS	Tolerance: +/- 0.25"	Dwg Units: in [mm]	www.DaikinApplied.com Software Version: 07.40

No change to this drawing may be made unless approved in writing by Daikin Applied. Purchaser must determine that the equipment is fit and sufficient for the job specifications.

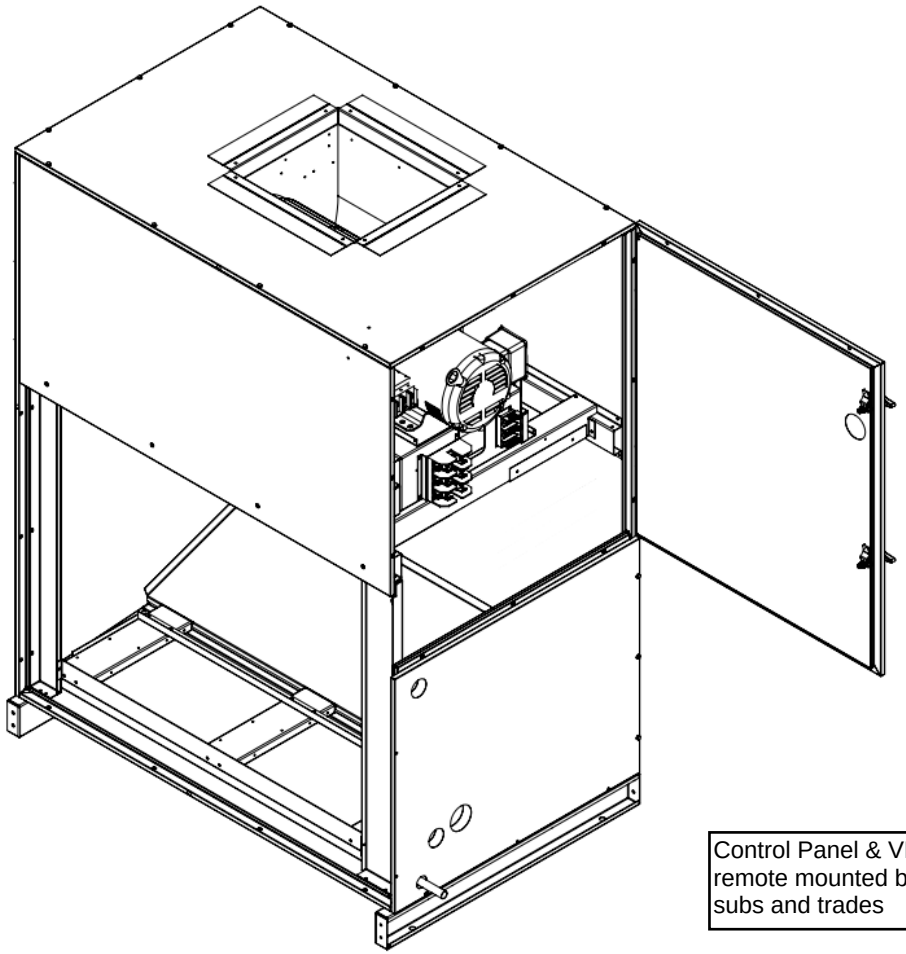

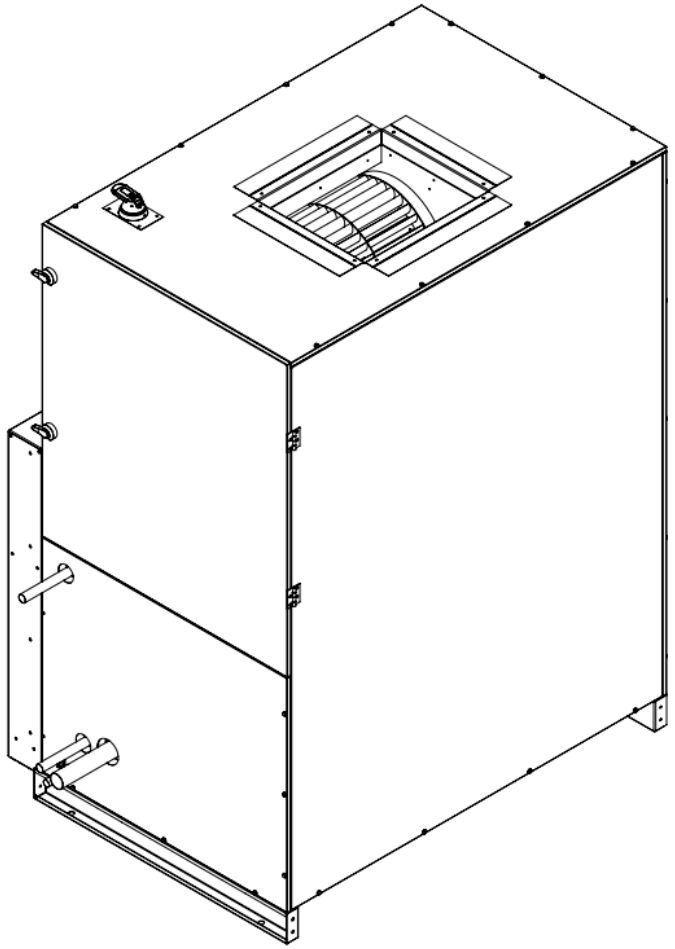

Control Panel & VFD to be remote mounted by Installing subs and trades

	Unit Tag: AHU-4,6 - Eiland (LH)			Sales Office: HTS Texas			DAIKIN
Product: PreciseLine® Air Handler	Project Name: Klein ISD Eiland ES AHU			Sales Engineer:			13600 Industrial Park Blvd. Minneapolis, MN 55441
Model: BCVD0401	Jan. 16, 2026	Ver/Rev:	Sheet: 1 of 1	Scale: NTS	Tolerance: +/- 0.25"	Dwg Units: in [mm]	www.DaikinApplied.com Software Version: 07.40

No change to this drawing may be made unless approved in writing by Daikin Applied. Purchaser must determine that the equipment is fit and sufficient for the job specifications.

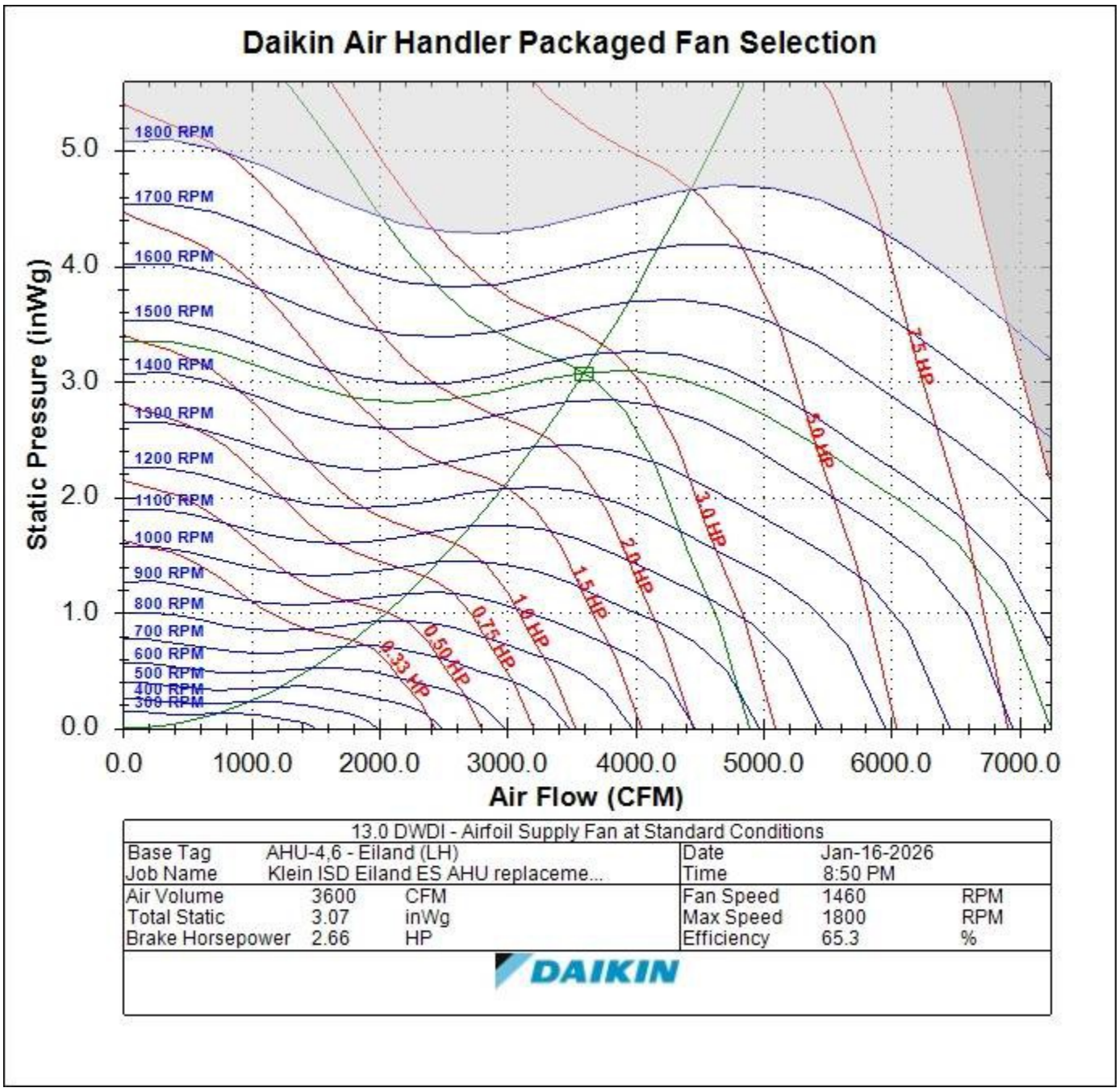

13.0 DWDI - Airfoil Supply Fan at Standard Conditions					
Base Tag	AHU-4,6 - Eiland (LH)		Date	Jan-16-2026	
Job Name	Klein ISD Eiland ES AHU replaceme...		Time	8:50 PM	
Air Volume	3600	CFM	Fan Speed	1460	RPM
Total Static	3.07	inWg	Max Speed	1800	RPM
Brake Horsepower	2.66	HP	Efficiency	65.3	%

DAIKIN

Job Information	*Technical Data Sheet*
Job Name	Klein ISD Eiland ES AHU replacements
Date	1/16/2026
Submitted By	Matt McPherson
Software Version	07.40
Unit Tag	AHU-5 - Eiland (RH)
FPA#	PL-250152-1



Unit Overview

Model Number	Voltage V/Hz/Phase	Airflow CFM	External Static Pressure inH_2O	Design Cooling Capacity Btu/hr
BCVD0401	460/60/3	3300	1.50	132994

Unit

Model Number:	BCVD0401
Unit Arrangement:	Vertical
Altitude:	0 ft

Physical

Dimensions and Weight (wet)

Length	Height	Width	Weight
31.0 in	65.5 in	47.5 in	445 lb

Construction

Insulation and Liners:	1" Injected Foam, R-6, Galvanized Steel Liner

Electrical

Field Connection	Unit FLA	Unit MCA	Unit MROPD	SCCR
Disconnect Switch	6.2 A	7.7 A	15 A	5 kA

Filter

Filter Access	Filter Depth	MERV Rating	(Quantity) Height x Width x Depth
Side	2 in	MERV 13	(2) 12 x 24, (2) 20 x 24

Primary Hydronic Coil

Physical

Fins per Inch	Rows	Casing Material	Face Area ft²	Face Velocity ft/min
14	6	Stainless Steel	8.0	411.5

Connection

Size	Type	Location
1.625	SWT	Right Hand

Drain Pan

Material	Connection
Stainless Steel	0.75 in

Performance

Capacity		Air Temperature			
		Entering		Leaving	
Total Btu/hr	Sensible Btu/hr	Dry Bulb °F	Wet Bulb °F	Dry Bulb °F	Wet Bulb °F
132994	86771	78.0	67.0	54.0	53.9

Fluid

Type	Entering Temperature °F	Leaving Temperature °F	Flow Rate gpm	Pressure Drop ft H_2O
Water	45.0	57.7	21.0	2.66

Supply Fan

Performance

Airflow	Total Static Pressure	Fan Speed	Controller Input Signal	Brake Horsepower	Total Input Power	Fan Energy Index	Altitude
3300	2.95 inH_2O	1443 rpm	8.0 VDC	2.38 HP	2.66 HP	1.315	0 ft

Motor

Type	(Qty) Horsepower	Motor Control	(Qty) FLA
FC Direct Drive NEMA Premium Efficiency Motor	(1) 5.0 HP	0-10V Modulating	(1) 6.2 A

Unit Discharge Conditions

AirTemperature

Motor Heat Btu/hr	Unit Leaving Dry Bulb °F	Unit Leaving Wet Bulb °F	Unit Leaving Dewpoint °F
7343	56.0	54.6	53.6

Supply Fan Total Pressure Drop Calculation

External Static Pressure:	1.50 inH_2O
Primary Filter:	0.29 inH_2O
Dirty/Additional Filter:	0.50 inH_2O
Cooling Coil:	0.66 inH_2O
Total Static Pressure (Supply):	2.95 inH_2O

Sound Power

	Sound Power (db)							
Frequency	**63 Hz**	**125 Hz**	**250 Hz**	**500 Hz**	**1 kHz**	**2 kHz**	**4 kHz**	**8 kHz**
Inlet	83	81	76	72	72	67	64	48
Discharge	91	87	85	81	79	77	74	65
Radiated	72	69	63	57	59	59	44	32

Options

Controls	
Overflow Switch:	Factory mounted Overflow Switch

Warranty

Parts:	1 year extended parts only

AHRI Certification

All equipment is rated and certified in accordance with AHRI 430.

Notes

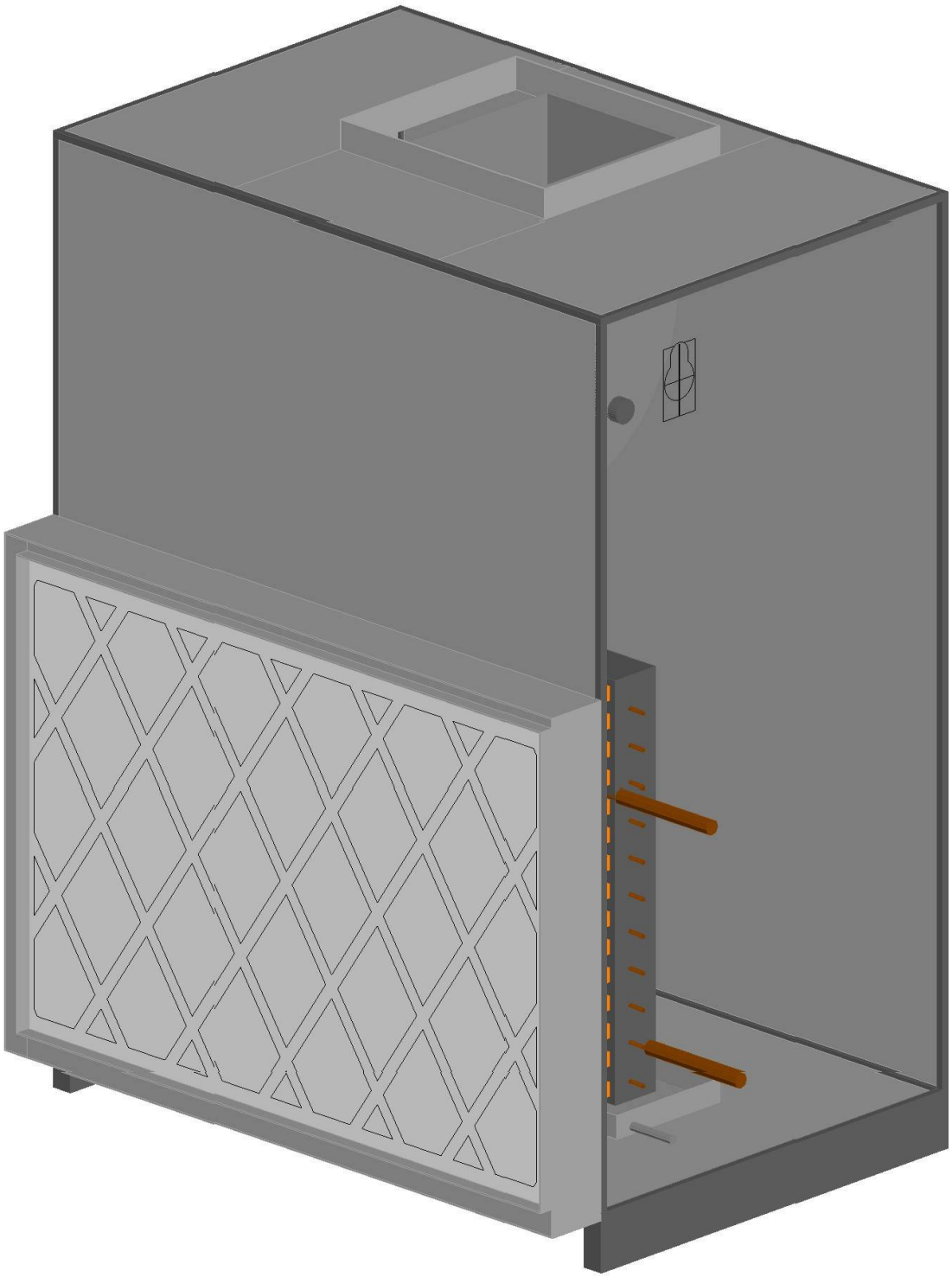

	Unit Tag: AHU-5 - Eiland (RH)			DAIKIN		
Product: PreciseLine® Air Handler	Project Name: Klein ISD Eiland ES AHU			13600 Industrial Park Blvd. Minneapolis, MN 55441		
Model: BCVD0401	Sales Office: HTS Texas			www.DaikinApplied.com	Software Version: 07.40	
Sales Engineer:	Jan. 16, 2026	Ver/Rev:	Sheet 1 of 1	Scale: NTS	Tolerance: +/-0.25"	Dwg Units: in [mm]

No change to this drawing may be made unless approved in writing by Daikin Applied. Purchaser must determine that the equipment is fit and sufficient for the job specifications.

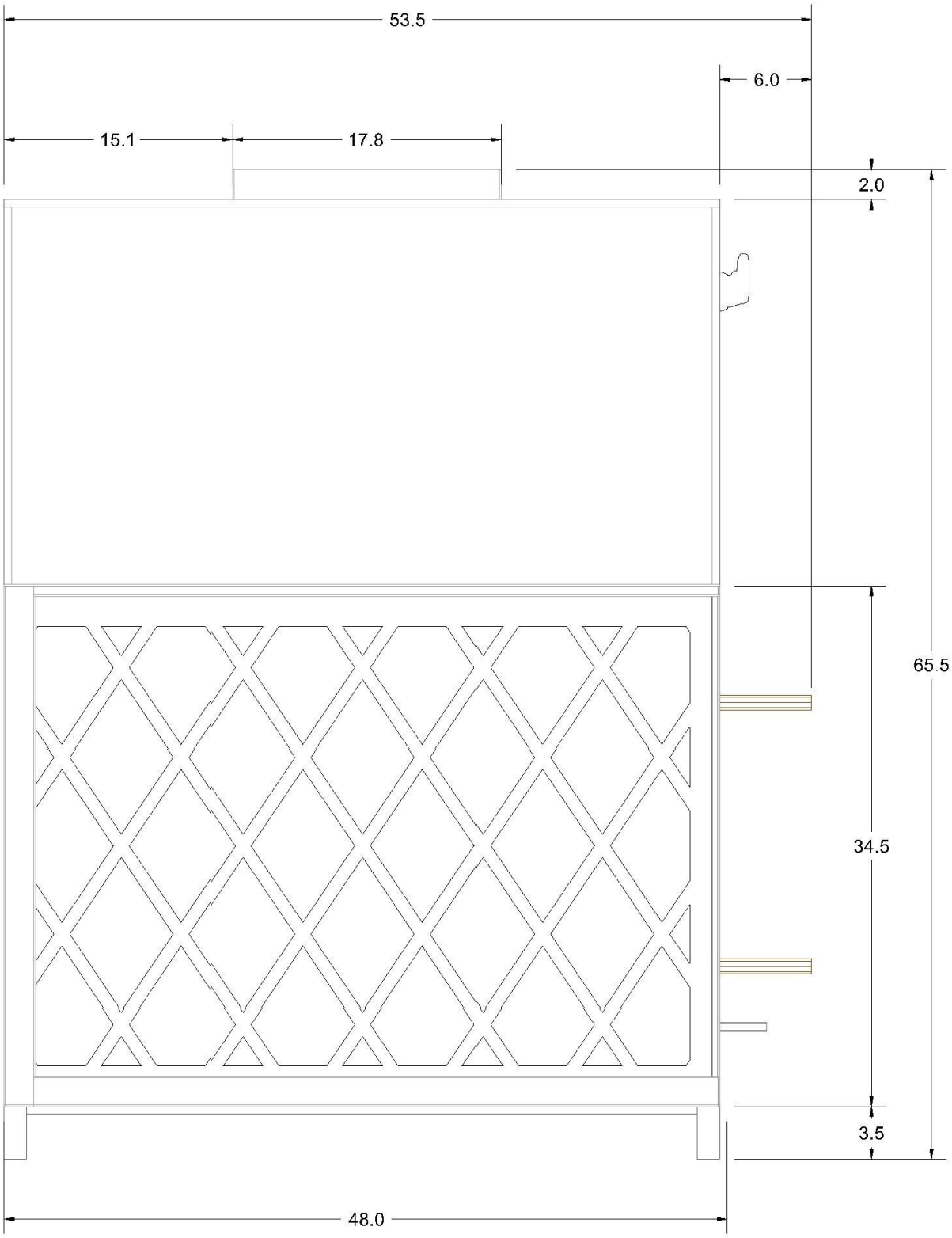

	Unit Tag: AHU-5 - Eiland (RH)			DAIKIN		
Product: PreciseLine® Air Handler	Project Name: Klein ISD Eiland ES AHU			13600 Industrial Park Blvd. Minneapolis, MN 55441		
Model: BCVD0401	Sales Office: HTS Texas			www.DaikinApplied.com	Software Version: 07.40	
Sales Engineer:	Jan. 16, 2026	Ver/Rev:	Sheet 1 of 1	Scale: NTS	Tolerance: +/-0.25"	Dwg Units: in [mm]

No change to this drawing may be made unless approved in writing by Daikin Applied. Purchaser must determine that the equipment is fit and sufficient for the job specifications.

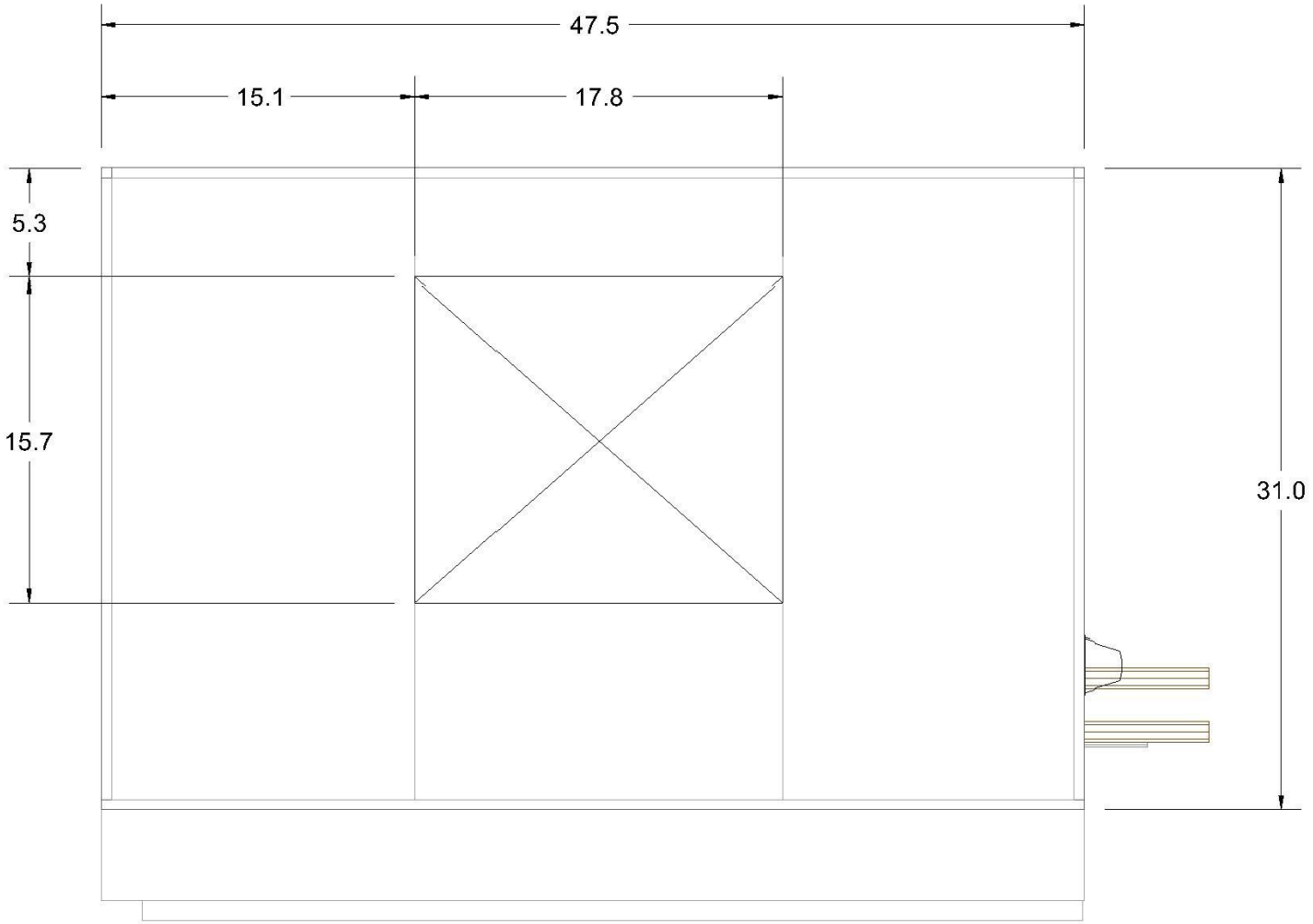

	Unit Tag: AHU-5 - Eiland (RH)			Sales Office: HTS Texas			DAIKIN
Product: PreciseLine® Air Handler	Project Name: Klein ISD Eiland ES AHU			Sales Engineer:			13600 Industrial Park Blvd. Minneapolis, MN 55441
Model: BCVD0401	Jan. 16, 2026	Ver/Rev:	Sheet: 1 of 1	Scale: NTS	Tolerance: +/- 0.25"	Dwg Units: in [mm]	www.DaikinApplied.com Software Version: 07.40

No change to this drawing may be made unless approved in writing by Daikin Applied. Purchaser must determine that the equipment is fit and sufficient for the job specifications.

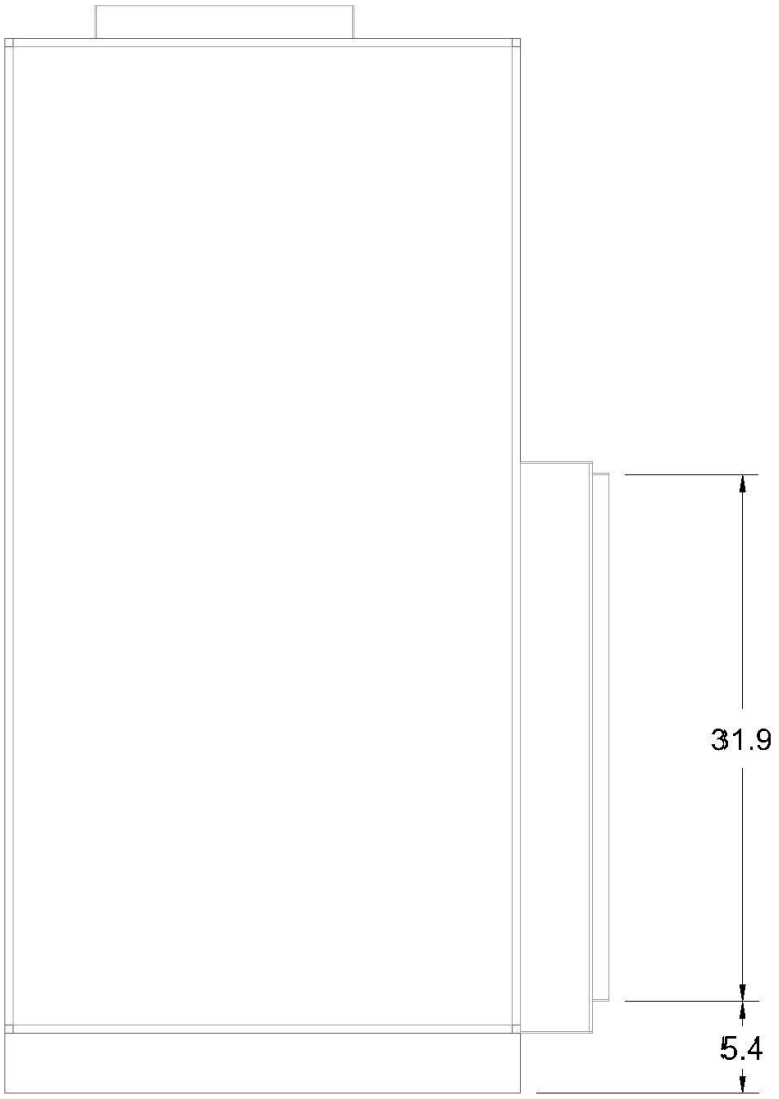

	Unit Tag: AHU-5 - Eiland (RH)			DAIKIN		
Product: PreciseLine® Air Handler	Project Name: Klein ISD Eiland ES AHU			13600 Industrial Park Blvd. Minneapolis, MN 55441		
Model: BCVD0401	Sales Office: HTS Texas			www.DaikinApplied.com	Software Version: 07.40	
Sales Engineer:	Jan. 16, 2026	Ver/Rev:	Sheet 1 of 1	Scale: NTS	Tolerance: +/-0.25"	Dwg Units: in [mm]

No change to this drawing may be made unless approved in writing by Daikin Applied. Purchaser must determine that the equipment is fit and sufficient for the job specifications.

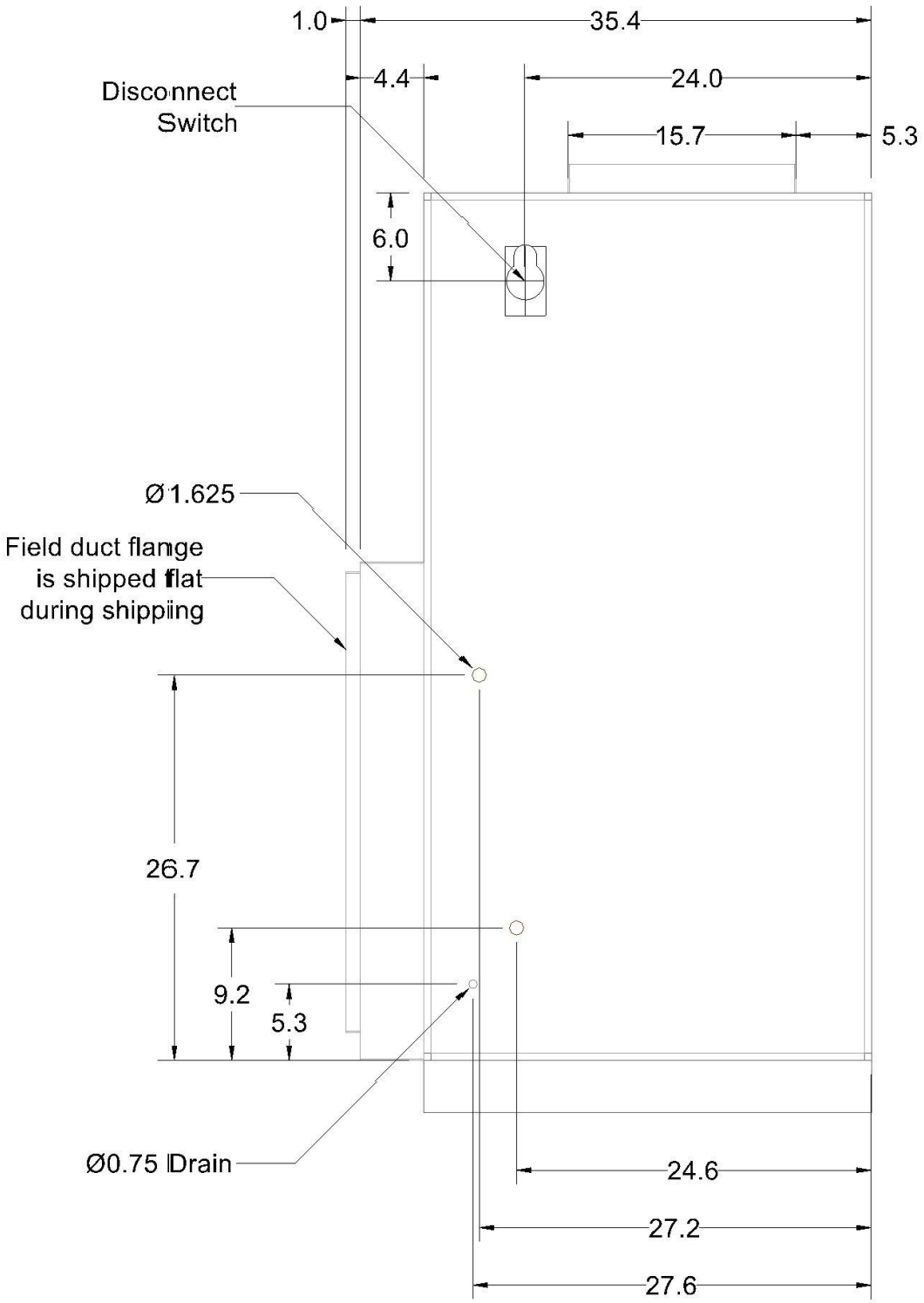

	Unit Tag: AHU-5 - Eiland (RH)			DAIKIN		
Product: PreciseLine® Air Handler	Project Name: Klein ISD Eiland ES AHU			13600 Industrial Park Blvd. Minneapolis, MN 55441		
Model: BCVD0401	Sales Office: HTS Texas			www.DaikinApplied.com	Software Version: 07.40	
Sales Engineer:	Jan. 16, 2026	Ver/Rev:	Sheet 1 of 1	Scale: NTS	Tolerance: +/-0.25"	Dwg Units: in [mm]

No change to this drawing may be made unless approved in writing by Daikin Applied. Purchaser must determine that the equipment is fit and sufficient for the job specifications.

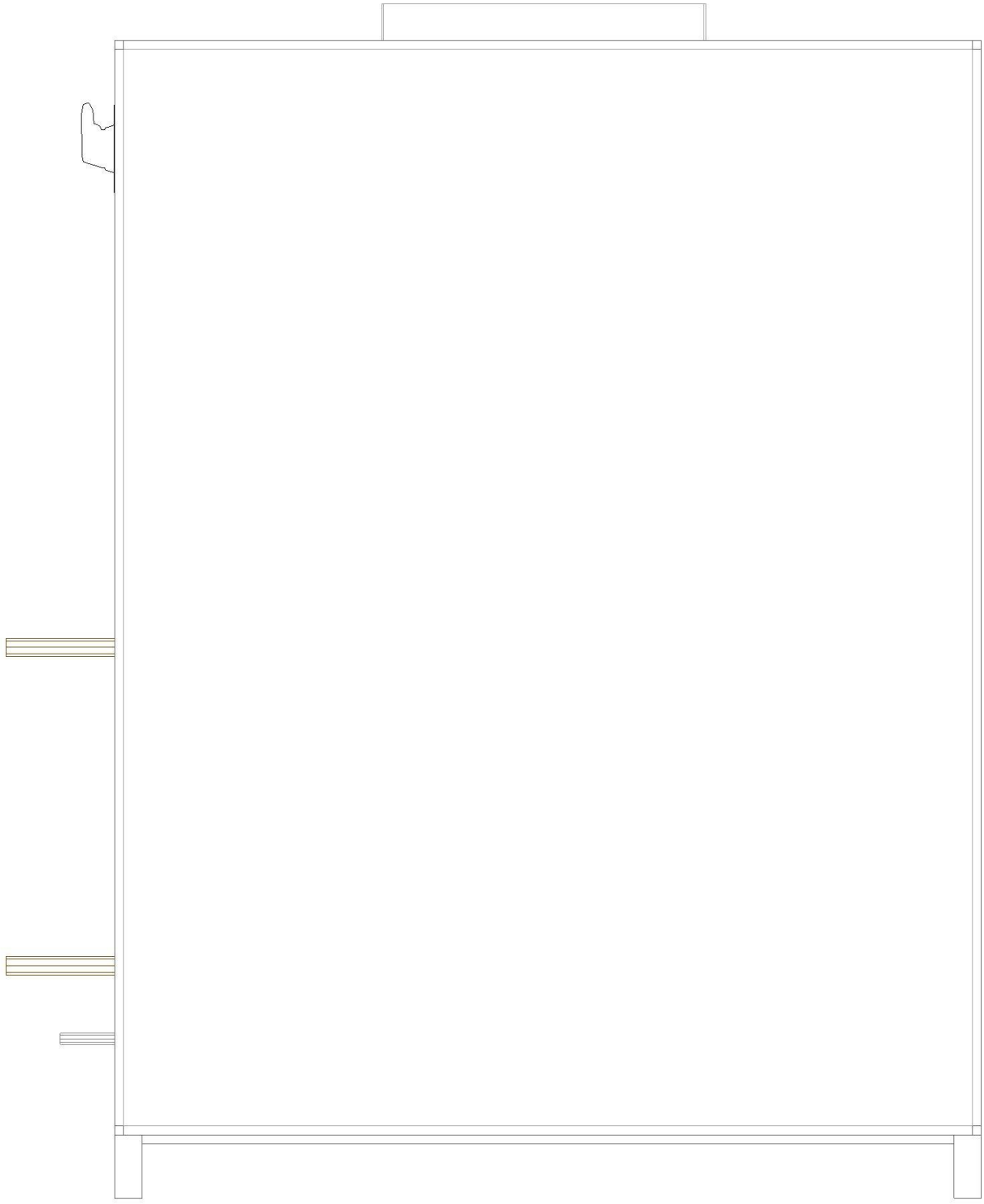

	Unit Tag: AHU-5 - Eiland (RH)			DAIKIN		
Product: PreciseLine® Air Handler	Project Name: Klein ISD Eiland ES AHU			13600 Industrial Park Blvd. Minneapolis, MN 55441		
Model: BCVD0401	Sales Office: HTS Texas			www.DaikinApplied.com Software Version: 07.40		
Sales Engineer:	Jan. 16, 2026	Ver/Rev:	Sheet 1 of 1	Scale: NTS	Tolerance: +/-0.25"	Dwg Units: in [mm]

No change to this drawing may be made unless approved in writing by Daikin Applied. Purchaser must determine that the equipment is fit and sufficient for the job specifications.

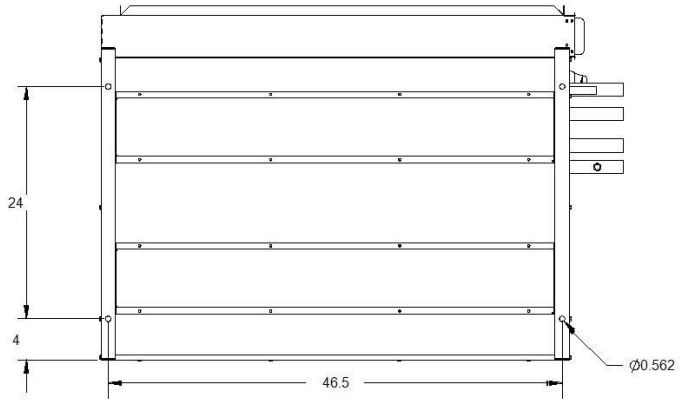

SECTION A-A

CABINET MOUNTING HOLE LOCATIONS

	Unit Tag: AHU-5 - Eiland (RH)			Sales Office: HTS Texas			DAIKIN
Product: PreciseLine® Air Handler	Project Name: Klein ISD Eiland ES AHU			Sales Engineer:			13600 Industrial Park Blvd. Minneapolis, MN 55441
Model: BCVD0401	Jan. 16, 2026	Ver/Rev:	Sheet: 1 of 1	Scale: NTS	Tolerance: +/- 0.25"	Dwg Units: in [mm]	www.DaikinApplied.com Software Version: 07.40

No change to this drawing may be made unless approved in writing by Daikin Applied. Purchaser must determine that the equipment is fit and sufficient for the job specifications.

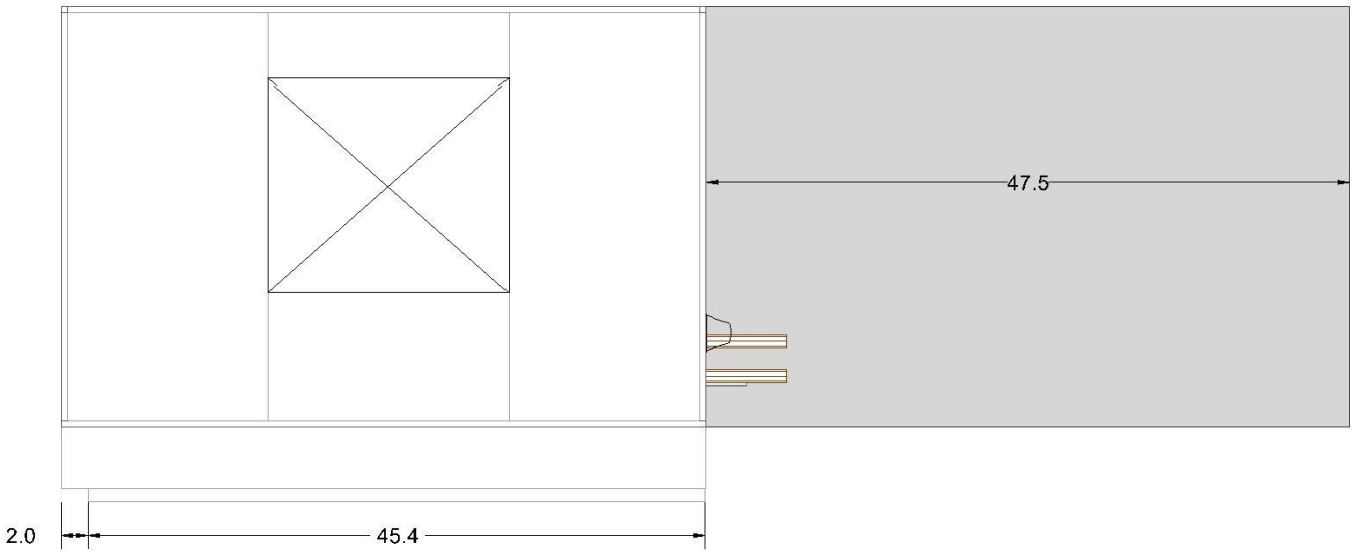

	Unit Tag: AHU-5 - Eiland (RH)			Sales Office: HTS Texas			DAIKIN
Product: PreciseLine® Air Handler	Project Name: Klein ISD Eiland ES AHU			Sales Engineer:			13600 Industrial Park Blvd. Minneapolis, MN 55441
Model: BCVD0401	Jan. 16, 2026	Ver/Rev:	Sheet: 1 of 1	Scale: NTS	Tolerance: +/- 0.25"	Dwg Units: in [mm]	www.DaikinApplied.com Software Version: 07.40

No change to this drawing may be made unless approved in writing by Daikin Applied. Purchaser must determine that the equipment is fit and sufficient for the job specifications.

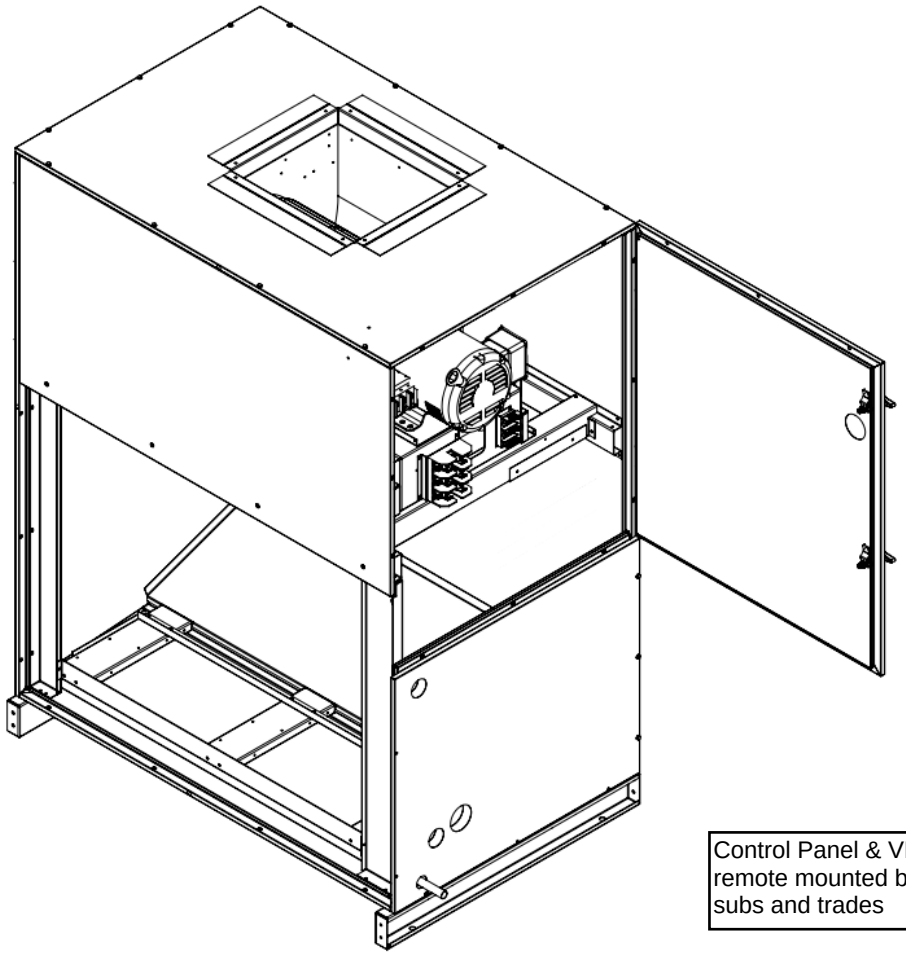

Control Panel & VFD to be remote mounted by Installing subs and trades

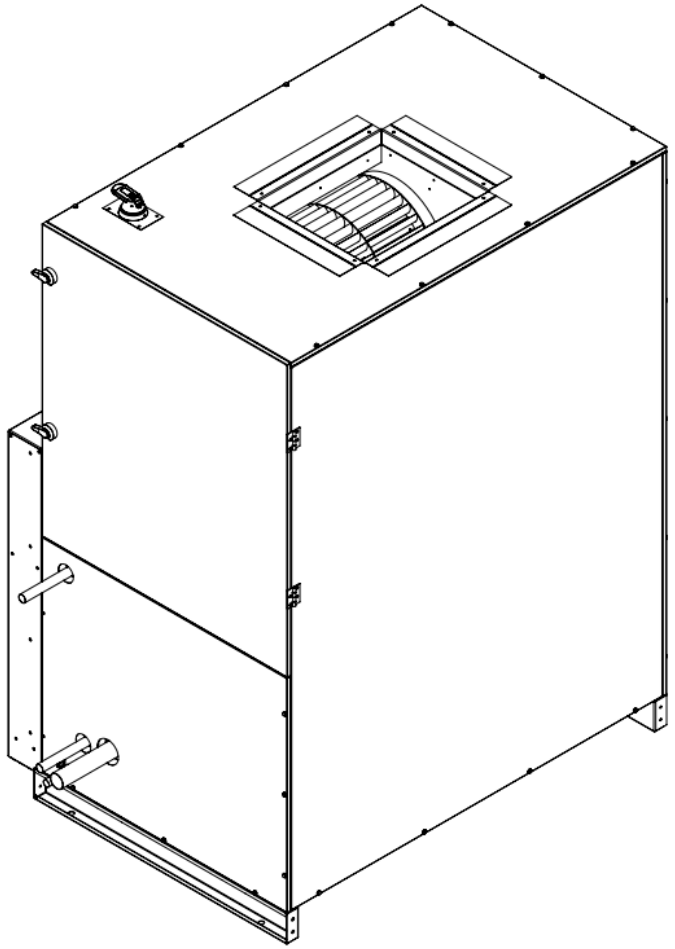

	Unit Tag: AHU-5 - Eiland (RH)			Sales Office: HTS Texas			DAIKIN
Product: PreciseLine® Air Handler	Project Name: Klein ISD Eiland ES AHU			Sales Engineer:			13600 Industrial Park Blvd. Minneapolis, MN 55441
Model: BCVD0401	Jan. 16, 2026	Ver/Rev:	Sheet: 1 of 1	Scale: NTS	Tolerance: +/- 0.25"	Dwg Units: in [mm]	www.DaikinApplied.com Software Version: 07.40

No change to this drawing may be made unless approved in writing by Daikin Applied. Purchaser must determine that the equipment is fit and sufficient for the job specifications.

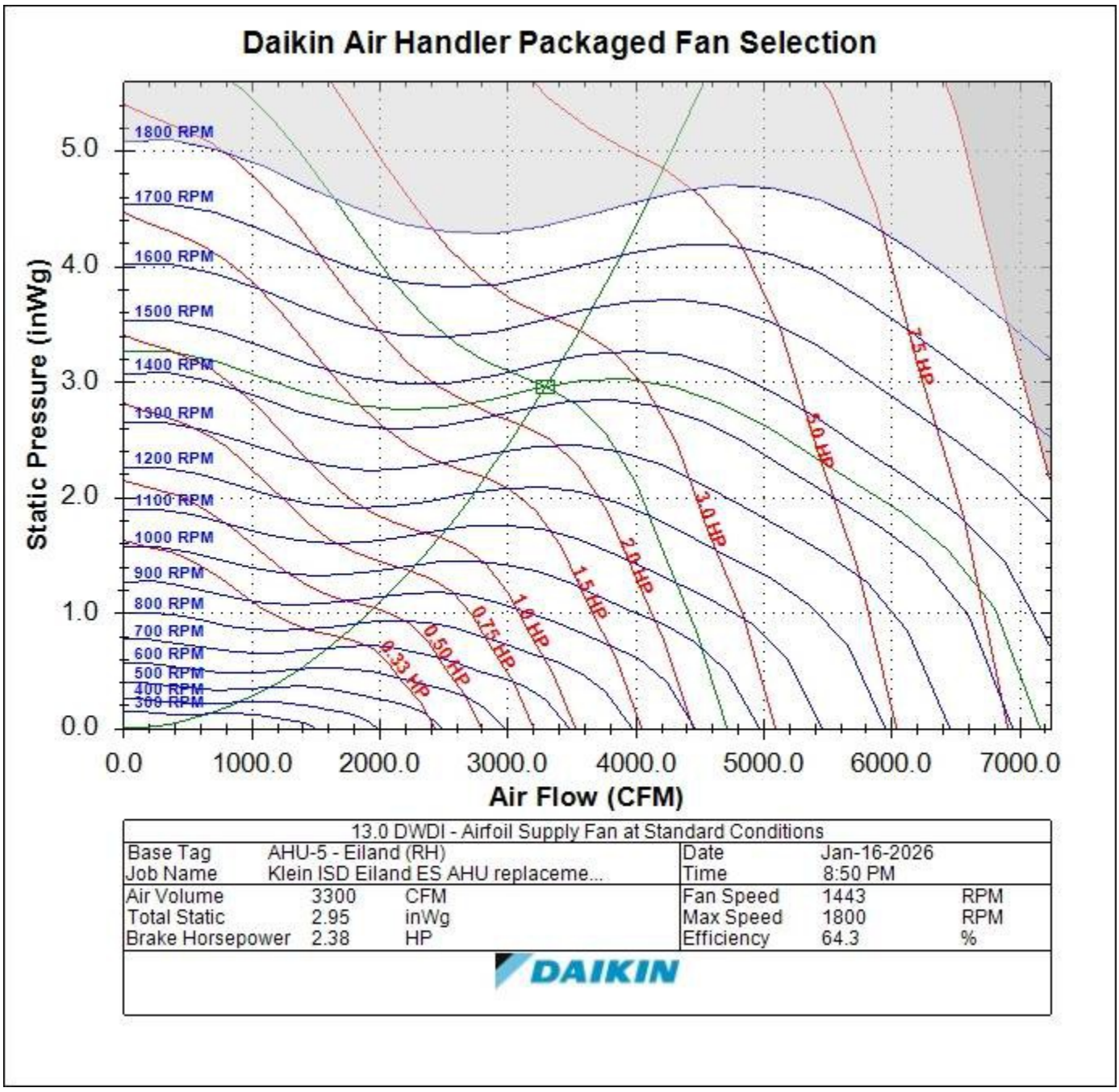
Daikin Air Handler Packaged Fan Selection
Static Pressure (inWg)
Air Flow (CFM)
0.0
1.0
2.0
3.0
4.0
5.0
0.0
1000.0
2000.0
3000.0
4000.0
5000.0
6000.0
7000.0
1800 RPM
1700 RPM
1600 RPM
1500 RPM
1400 RPM
1300 RPM
1200 RPM
1100 RPM
1000 RPM
900 RPM
800 RPM
700 RPM
600 RPM
500 RPM
400 RPM
300 RPM
0.33 HP
0.50 HP
0.75 HP
1.0 HP
1.5 HP
2.0 HP
3.0 HP
5.0 HP
7.5 HP
13.0 DWDI - Airfoil Supply Fan at Standard Conditions
Base Tag AHU-5 - Eiland (RH)
Job Name Klein ISD Eiland ES AHU replaceme...
Date Jan-16-2026
Time 8:50 PM
Air Volume 3300 CFM
Total Static 2.95 inWg
Brake Horsepower 2.38 HP
Fan Speed 1443 RPM
Max Speed 1800 RPM
Efficiency 64.3 %
DAIKIN

Job Information	*Technical Data Sheet*
Job Name	Klein ISD Eiland ES AHU replacements
Date	1/16/2026
Submitted By	Matt McPherson
Software Version	07.40
Unit Tag	AHU-7,10 - Eiland (RH)



Unit Overview

Model Number	Voltage V/Hz/Phase	Airflow CFM	External Static Pressure inH_2O	Design Cooling Capacity Btu/hr
BCVD0401	460/60/3	3600	1.50	144424

Unit

Model Number:	BCVD0401
Unit Arrangement:	Vertical
Altitude:	0 ft

Physical

Dimensions and Weight (wet)

Length	Height	Width	Weight
31.0 in	65.5 in	47.5 in	445 lb

Construction

Insulation and Liners:	1" Injected Foam, R-6, Galvanized Steel Liner

Electrical

Field Connection	Unit FLA	Unit MCA	Unit MROPD	SCCR
Disconnect Switch	6.2 A	7.7 A	15 A	5 kA

Filter

Filter Access	Filter Depth	MERV Rating	(Quantity) Height x Width x Depth
Side	2 in	MERV 13	(2) 12 x 24, (2) 20 x 24

Primary Hydronic Coil

Physical

Fins per Inch	Rows	Casing Material	Face Area ft²	Face Velocity ft/min
14	6	Stainless Steel	8.0	448.9

Connection

Size	Type	Location
1.625	SWT	Right Hand

Drain Pan

Material	Connection
Stainless Steel	0.75 in

Performance

Capacity		Air Temperature			
		Entering		Leaving	
Total Btu/hr	Sensible Btu/hr	Dry Bulb °F	Wet Bulb °F	Dry Bulb °F	Wet Bulb °F
144424	94364	78.0	67.0	54.0	54.0

Fluid

Type	Entering Temperature °F	Leaving Temperature °F	Flow Rate gpm	Pressure Drop ft H_2O
Water	45.0	57.6	23.0	3.12

Supply Fan

Performance

Airflow	Total Static Pressure	Fan Speed	Controller Input Signal	Brake Horsepower	Total Input Power	Fan Energy Index	Altitude
3600	3.07 inH_2O	1460 rpm	8.1 VDC	2.66 HP	2.96 HP	1.323	0 ft

Motor

Type	(Qty) Horsepower	Motor Control	(Qty) FLA
FC Direct Drive NEMA Premium Efficiency Motor	(1) 5.0 HP	0-10V Modulating	(1) 6.2 A

Unit Discharge Conditions

AirTemperature

Motor Heat Btu/hr	Unit Leaving Dry Bulb °F	Unit Leaving Wet Bulb °F	Unit Leaving Dewpoint °F
8053	56.1	54.7	53.7

Supply Fan Total Pressure Drop Calculation

External Static Pressure:	1.50 inH_2O
Primary Filter:	0.33 inH_2O
Dirty/Additional Filter:	0.50 inH_2O
Cooling Coil:	0.75 inH_2O
Total Static Pressure (Supply):	3.07 inH_2O

Sound Power

	Sound Power (db)							
Frequency	**63 Hz**	**125 Hz**	**250 Hz**	**500 Hz**	**1 kHz**	**2 kHz**	**4 kHz**	**8 kHz**
Inlet	84	82	77	73	73	67	64	48
Discharge	92	88	85	82	80	77	75	66
Radiated	72	69	64	57	59	60	44	32

Options

Controls	
Overflow Switch:	Factory mounted Overflow Switch

Warranty

Parts:	1 year extended parts only

AHRI Certification

All equipment is rated and certified in accordance with AHRI 430.

Notes

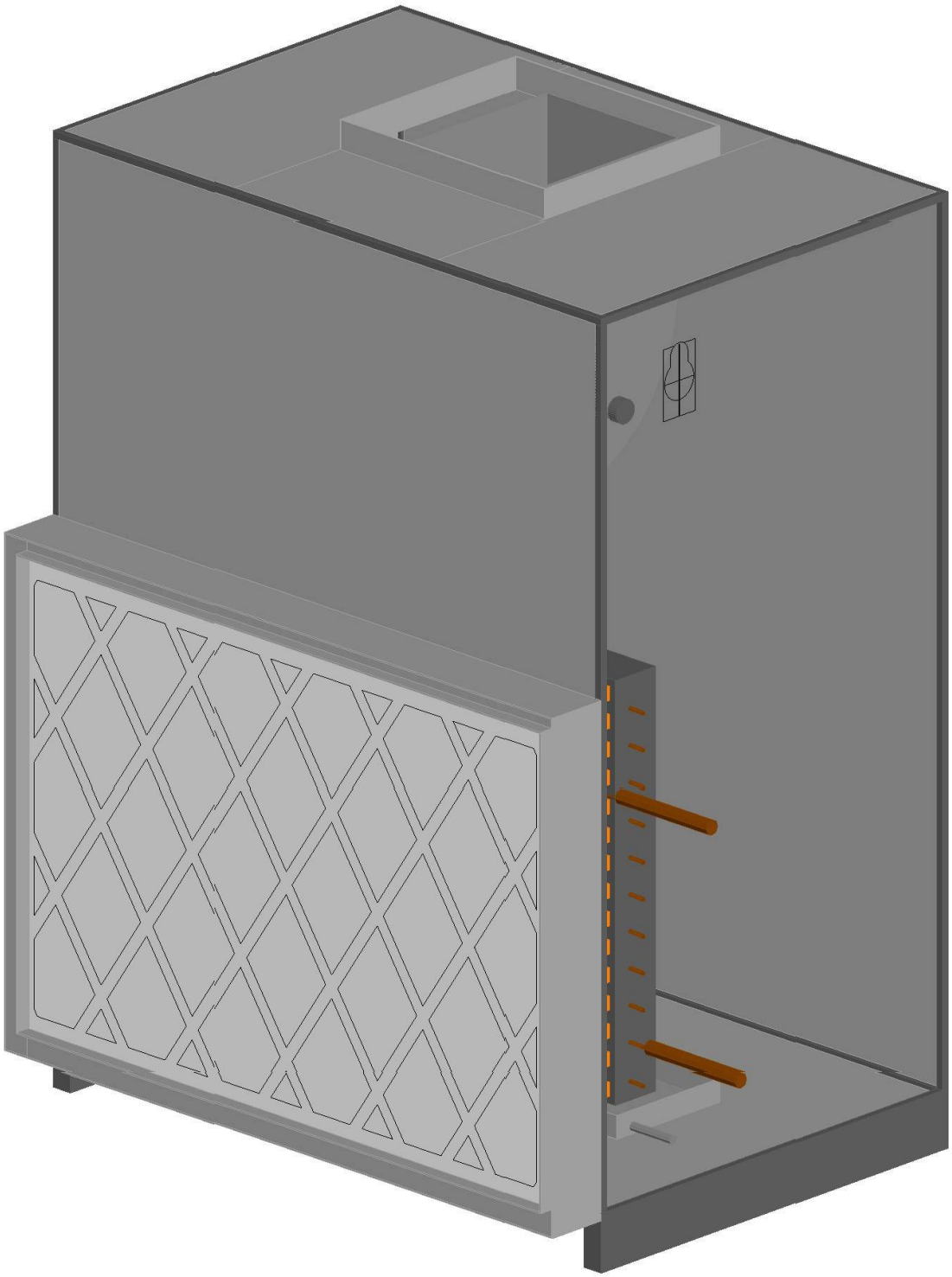

	Unit Tag: AHU-7,10 - Eiland (RH)			DAIKIN		
Product: PreciseLine® Air Handler	Project Name: Klein ISD Eiland ES AHU			13600 Industrial Park Blvd. Minneapolis, MN 55441		
Model: BCVD0401	Sales Office: HTS Texas			www.DaikinApplied.com Software Version: 07.40		
Sales Engineer:	Jan. 16, 2026	Ver/Rev:	Sheet 1 of 1	Scale: NTS	Tolerance: +/-0.25"	Dwg Units: in [mm]

No change to this drawing may be made unless approved in writing by Daikin Applied. Purchaser must determine that the equipment is fit and sufficient for the job specifications.

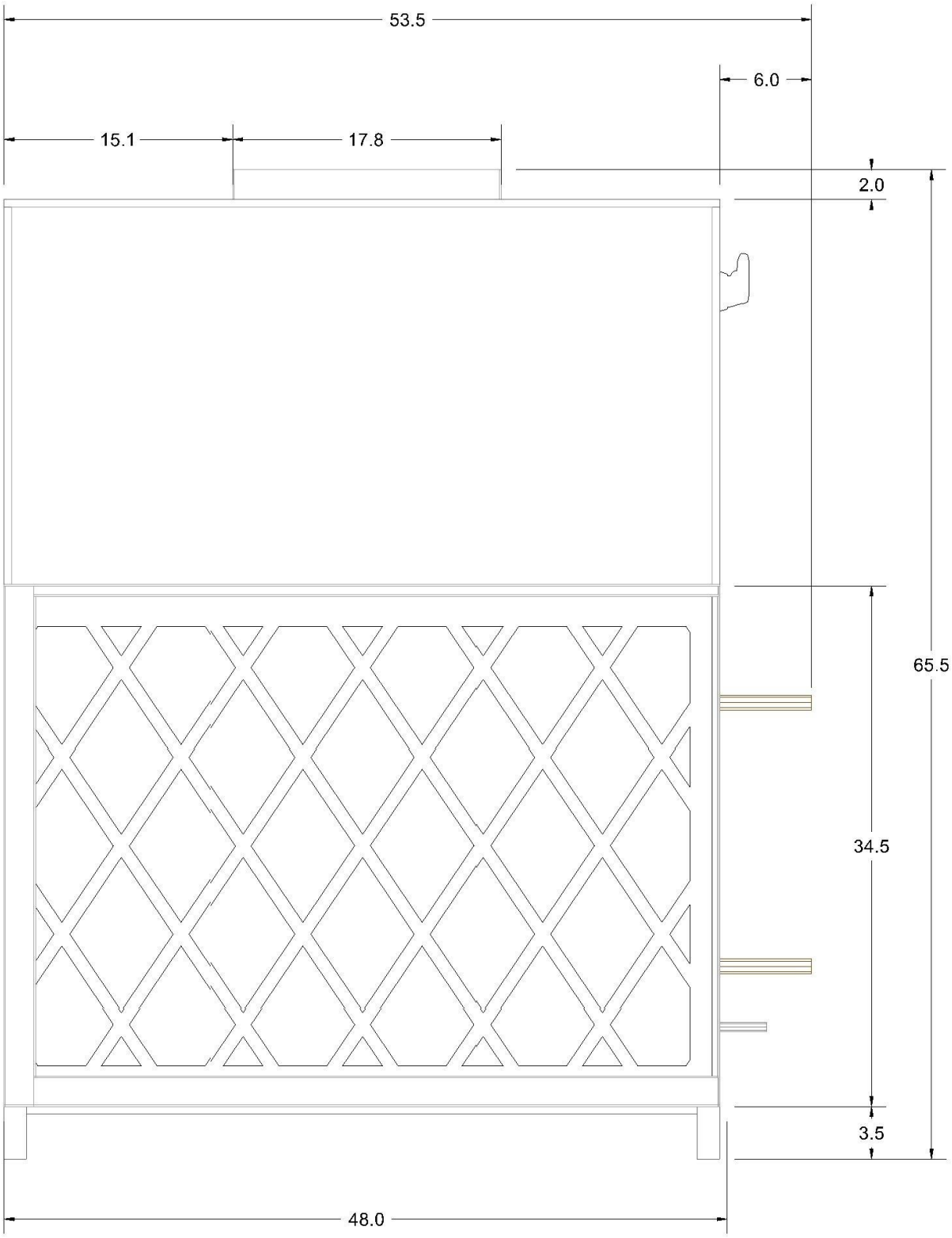

	Unit Tag: AHU-7,10 - Eiland (RH)			DAIKIN		
Product: PreciseLine® Air Handler	Project Name: Klein ISD Eiland ES AHU			13600 Industrial Park Blvd. Minneapolis, MN 55441		
Model: BCVD0401	Sales Office: HTS Texas			www.DaikinApplied.com	Software Version: 07.40	
Sales Engineer:	Jan. 16, 2026	Ver/Rev:	Sheet 1 of 1	Scale: NTS	Tolerance: +/-0.25"	Dwg Units: in [mm]

No change to this drawing may be made unless approved in writing by Daikin Applied. Purchaser must determine that the equipment is fit and sufficient for the job specifications.

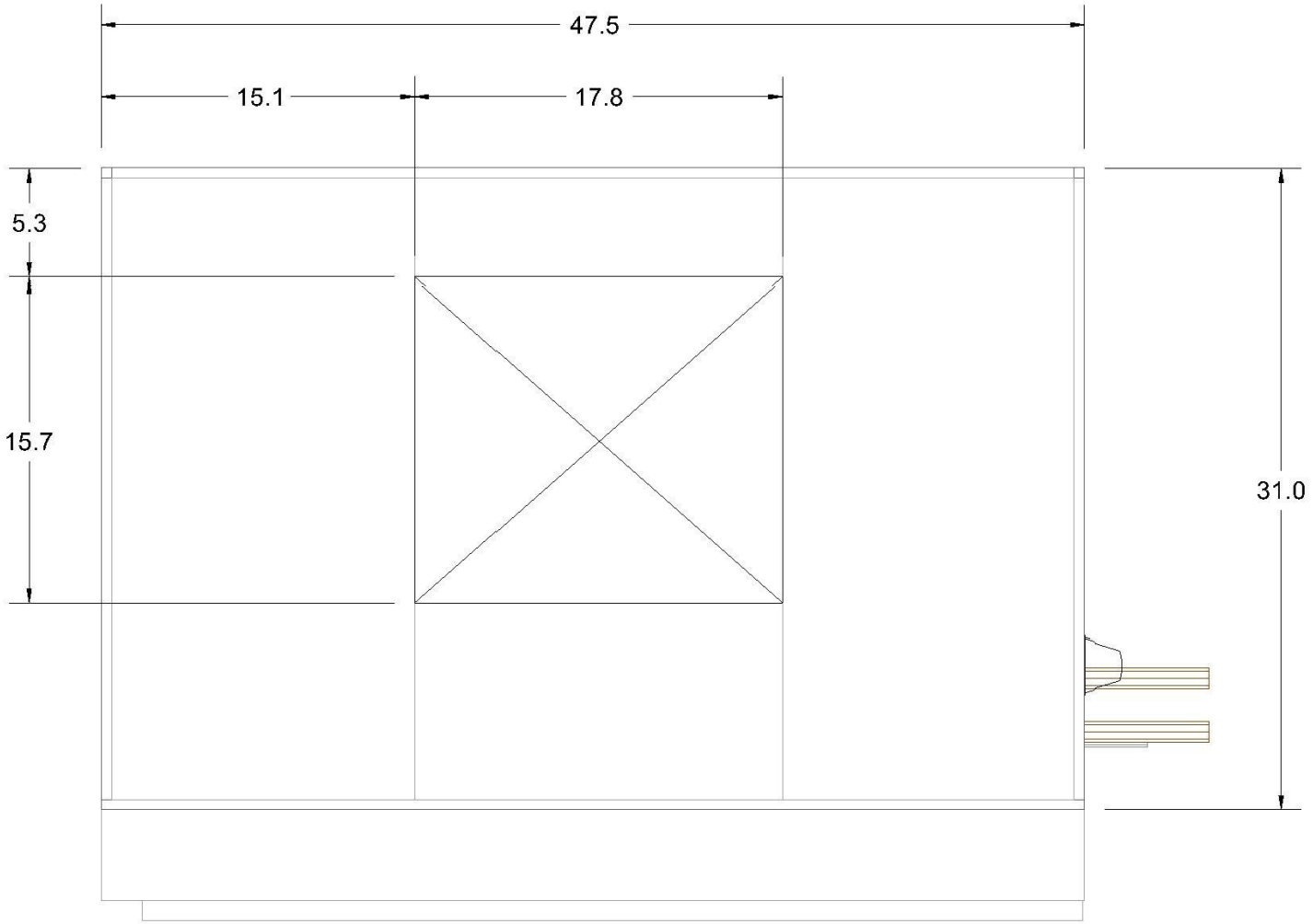

	Unit Tag: AHU-7,10 - Eiland (RH)			Sales Office: HTS Texas			DAIKIN
Product: PreciseLine® Air Handler	Project Name: Klein ISD Eiland ES AHU			Sales Engineer:			13600 Industrial Park Blvd. Minneapolis, MN 55441
Model: BCVD0401	Jan. 16, 2026	Ver/Rev:	Sheet: 1 of 1	Scale: NTS	Tolerance: +/- 0.25"	Dwg Units: in [mm]	www.DaikinApplied.com Software Version: 07.40

No change to this drawing may be made unless approved in writing by Daikin Applied. Purchaser must determine that the equipment is fit and sufficient for the job specifications.

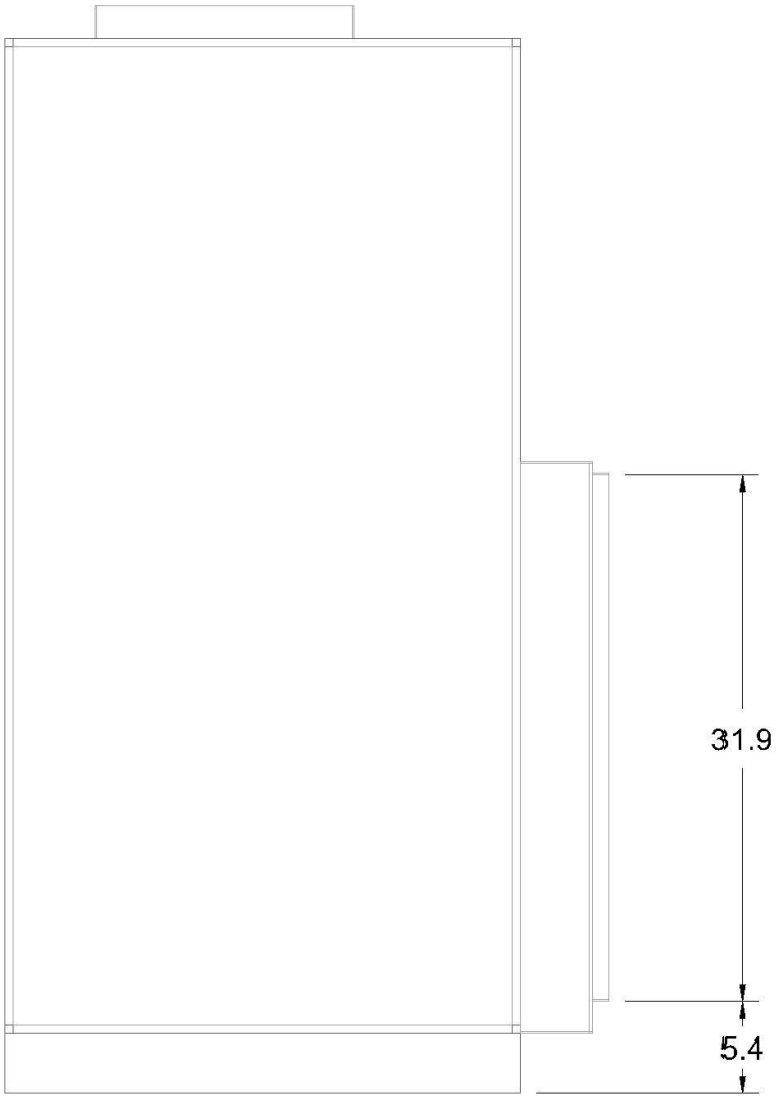

	Unit Tag: AHU-7,10 - Eiland (RH)			DAIKIN		
Product: PreciseLine® Air Handler	Project Name: Klein ISD Eiland ES AHU			13600 Industrial Park Blvd. Minneapolis, MN 55441		
Model: BCVD0401	Sales Office: HTS Texas			www.DaikinApplied.com Software Version: 07.40		
Sales Engineer:	Jan. 16, 2026	Ver/Rev:	Sheet 1 of 1	Scale: NTS	Tolerance: +/-0.25"	Dwg Units: in [mm]

No change to this drawing may be made unless approved in writing by Daikin Applied. Purchaser must determine that the equipment is fit and sufficient for the job specifications.

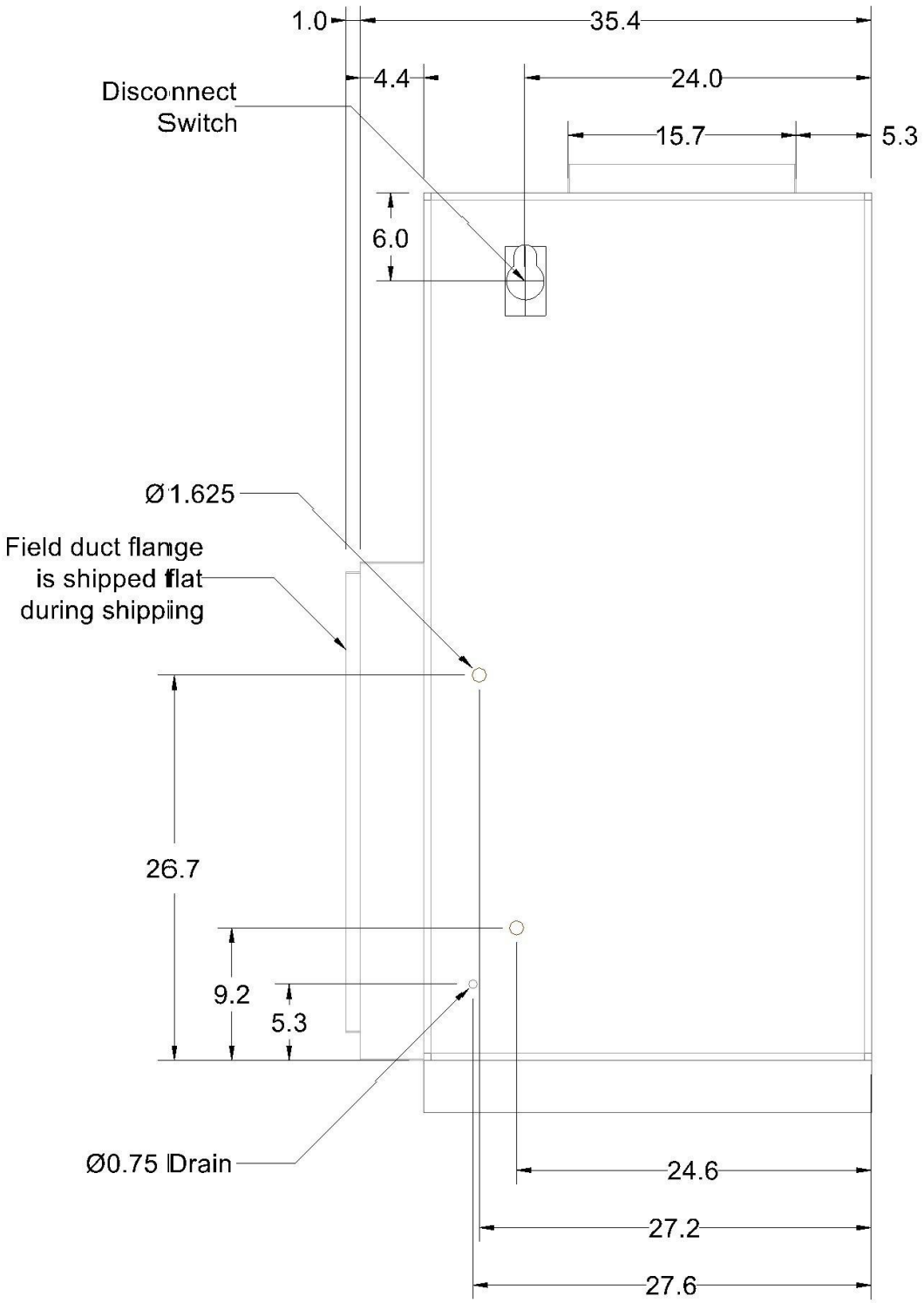

	Unit Tag: AHU-7,10 - Eiland (RH)			DAIKIN		
Product: PreciseLine® Air Handler	Project Name: Klein ISD Eiland ES AHU			13600 Industrial Park Blvd. Minneapolis, MN 55441		
Model: BCVD0401	Sales Office: HTS Texas			www.DaikinApplied.com	Software Version: 07.40	
Sales Engineer:	Jan. 16, 2026	Ver/Rev:	Sheet 1 of 1	Scale: NTS	Tolerance: +/-0.25"	Dwg Units: in [mm]

No change to this drawing may be made unless approved in writing by Daikin Applied. Purchaser must determine that the equipment is fit and sufficient for the job specifications.

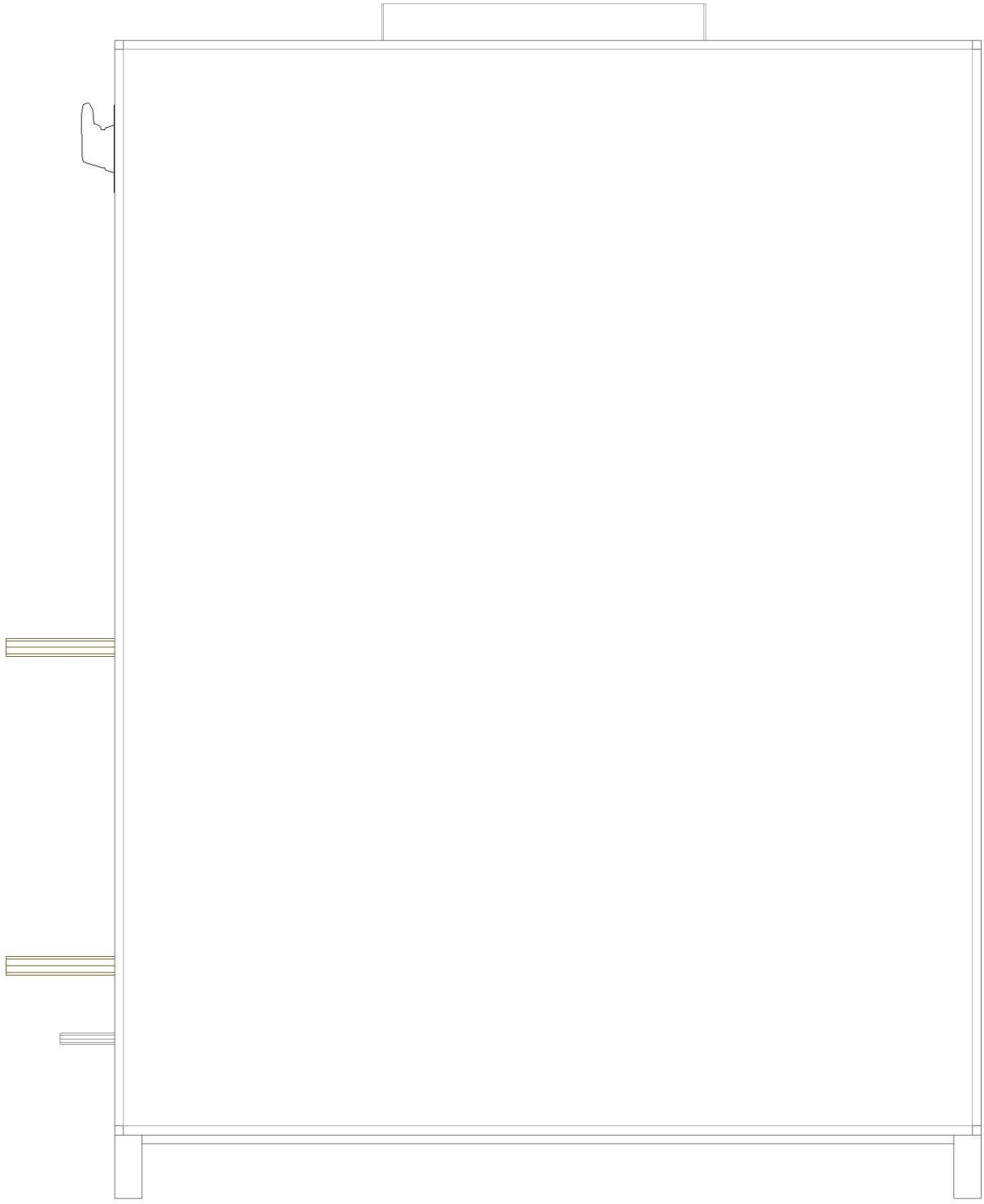

	Unit Tag: AHU-7,10 - Eiland (RH)			DAIKIN		
Product: PreciseLine® Air Handler	Project Name: Klein ISD Eiland ES AHU			13600 Industrial Park Blvd. Minneapolis, MN 55441		
Model: BCVD0401	Sales Office: HTS Texas			www.DaikinApplied.com Software Version: 07.40		
Sales Engineer:	Jan. 16, 2026	Ver/Rev:	Sheet 1 of 1	Scale: NTS	Tolerance: +/-0.25"	Dwg Units: in [mm]

No change to this drawing may be made unless approved in writing by Daikin Applied. Purchaser must determine that the equipment is fit and sufficient for the job specifications.

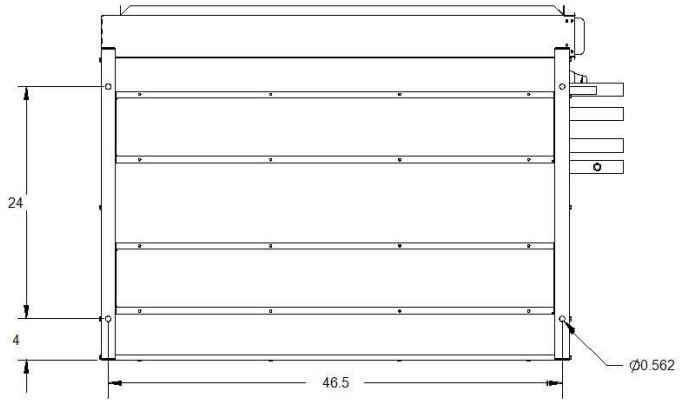

SECTION A-A

CABINET MOUNTING HOLE LOCATIONS

	Unit Tag: AHU-7,10 - Eiland (RH)			Sales Office: HTS Texas			DAIKIN
Product: PreciseLine® Air Handler	Project Name: Klein ISD Eiland ES AHU			Sales Engineer:			13600 Industrial Park Blvd. Minneapolis, MN 55441
Model: BCVD0401	Jan. 16, 2026	Ver/Rev:	Sheet: 1 of 1	Scale: NTS	Tolerance: +/- 0.25"	Dwg Units: in [mm]	www.DaikinApplied.com Software Version: 07.40

No change to this drawing may be made unless approved in writing by Daikin Applied. Purchaser must determine that the equipment is fit and sufficient for the job specifications.

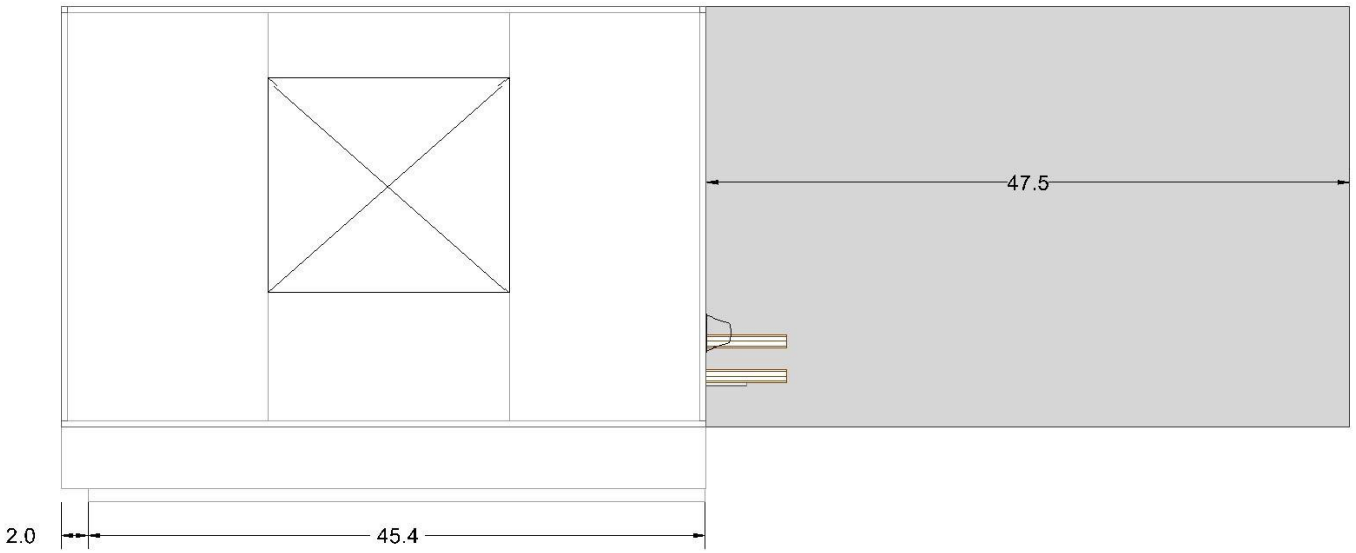

	Unit Tag: AHU-7,10 - Eiland (RH)			Sales Office: HTS Texas			DAIKIN
Product: PreciseLine® Air Handler	Project Name: Klein ISD Eiland ES AHU			Sales Engineer:			13600 Industrial Park Blvd. Minneapolis, MN 55441
Model: BCVD0401	Jan. 16, 2026	Ver/Rev:	Sheet: 1 of 1	Scale: NTS	Tolerance: +/- 0.25"	Dwg Units: in [mm]	www.DaikinApplied.com Software Version: 07.40

No change to this drawing may be made unless approved in writing by Daikin Applied. Purchaser must determine that the equipment is fit and sufficient for the job specifications.

Control Panel & VFD to be remote mounted by Installing subs and trades

	Unit Tag: AHU-7,10 - Eiland (RH)			Sales Office: HTS Texas			DAIKIN
Product: PreciseLine® Air Handler	Project Name: Klein ISD Eiland ES AHU			Sales Engineer:			13600 Industrial Park Blvd. Minneapolis, MN 55441
Model: BCVD0401	Jan. 16, 2026	Ver/Rev:	Sheet: 1 of 1	Scale: NTS	Tolerance: +/- 0.25"	Dwg Units: in [mm]	www.DaikinApplied.com Software Version: 07.40

No change to this drawing may be made unless approved in writing by Daikin Applied. Purchaser must determine that the equipment is fit and sufficient for the job specifications.

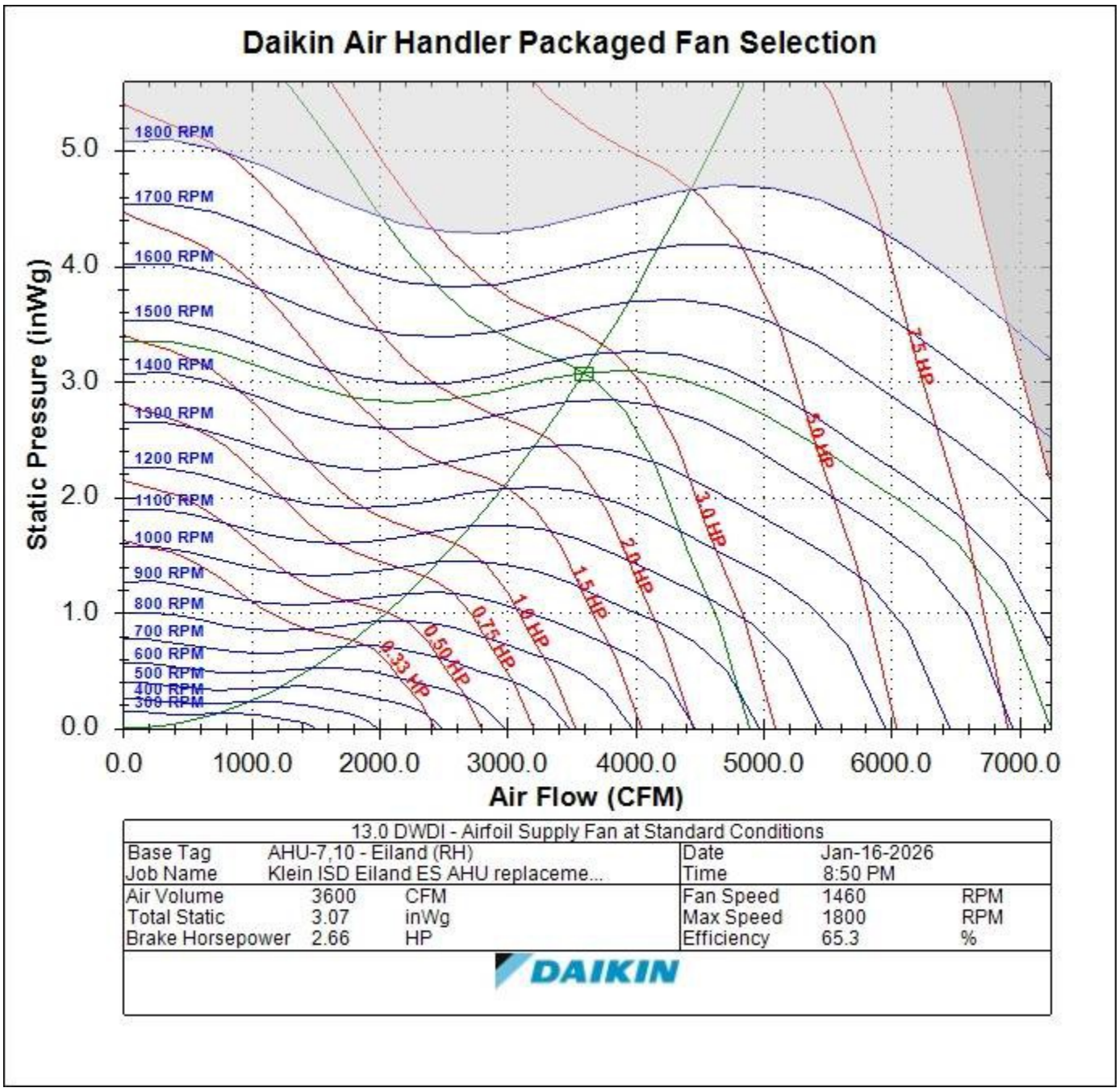

13.0 DWDI - Airfoil Supply Fan at Standard Conditions					
Base Tag	AHU-7,10 - Eiland (RH)		Date	Jan-16-2026	
Job Name	Klein ISD Eiland ES AHU replaceme...		Time	8:50 PM	
Air Volume	3600	CFM	Fan Speed	1460	RPM
Total Static	3.07	inWg	Max Speed	1800	RPM
Brake Horsepower	2.66	HP	Efficiency	65.3	%

DAIKIN

Job Information	*Technical Data Sheet*
Job Name	Klein ISD Eiland ES AHU replacements
Date	1/16/2026
Submitted By	Matt McPherson
Software Version	07.40
Unit Tag	AHU-11 - Eiland (LH)
FPA#	PL-250152-1



Unit Overview

Model Number	Voltage V/Hz/Phase	Airflow CFM	External Static Pressure inH_2O	Design Cooling Capacity Btu/hr
BCVD0401	460/60/3	3200	1.50	135507

Unit

Model Number:	BCVD0401
Unit Arrangement:	Vertical
Altitude:	0 ft

Physical

Dimensions and Weight (wet)

Length	Height	Width	Weight
31.0 in	65.5 in	47.5 in	445 lb

Construction

Insulation and Liners:	1" Injected Foam, R-6, Galvanized Steel Liner

Electrical

Field Connection	Unit FLA	Unit MCA	Unit MROPD	SCCR
Disconnect Switch	6.2 A	7.7 A	15 A	5 kA

Filter

Filter Access	Filter Depth	MERV Rating	(Quantity) Height x Width x Depth
Side	2 in	MERV 13	(2) 12 x 24, (2) 20 x 24

Primary Hydronic Coil

Physical

Fins per Inch	Rows	Casing Material	Face Area ft²	Face Velocity ft/min
12	6	Stainless Steel	8.0	399.0

Connection

Size	Type	Location
1.625	SWT	Left Hand

Drain Pan

Material	Connection
Stainless Steel	0.75 in

Performance

Capacity		Air Temperature			
		Entering		Leaving	
Total Btu/hr	Sensible Btu/hr	Dry Bulb °F	Wet Bulb °F	Dry Bulb °F	Wet Bulb °F
135507	86722	78.0	67.0	53.2	53.2

Fluid

Type	Entering Temperature °F	Leaving Temperature °F	Flow Rate gpm	Pressure Drop ft H_2O
Water	45.0	57.9	21.0	6.37

Supply Fan

Performance

Airflow	Total Static Pressure	Fan Speed	Controller Input Signal	Brake Horsepower	Total Input Power	Fan Energy Index	Altitude
3200	2.84 inH_2O	1418 rpm	7.8 VDC	2.23 HP	2.49 HP	1.318	0 ft

Motor

Type	(Qty) Horsepower	Motor Control	(Qty) FLA
FC Direct Drive NEMA Premium Efficiency Motor	(1) 5.0 HP	0-10V Modulating	(1) 6.2 A

Unit Discharge Conditions

AirTemperature

Motor Heat Btu/hr	Unit Leaving Dry Bulb °F	Unit Leaving Wet Bulb °F	Unit Leaving Dewpoint °F
6956	55.2	53.8	52.8

Supply Fan Total Pressure Drop Calculation

External Static Pressure:	1.50 inH_2O
Primary Filter:	0.28 inH_2O
Dirty/Additional Filter:	0.50 inH_2O
Cooling Coil:	0.55 inH_2O
Total Static Pressure (Supply):	2.84 inH_2O

Sound Power

	Sound Power (db)							
Frequency	**63 Hz**	**125 Hz**	**250 Hz**	**500 Hz**	**1 kHz**	**2 kHz**	**4 kHz**	**8 kHz**
Inlet	83	81	77	73	74	69	67	55
Discharge	91	87	84	81	79	76	74	65
Radiated	71	68	63	56	59	59	43	31

Options

Controls	
Overflow Switch:	Factory mounted Overflow Switch

Warranty

Parts:	1 year extended parts only

AHRI Certification

All equipment is rated and certified in accordance with AHRI 430.

Notes

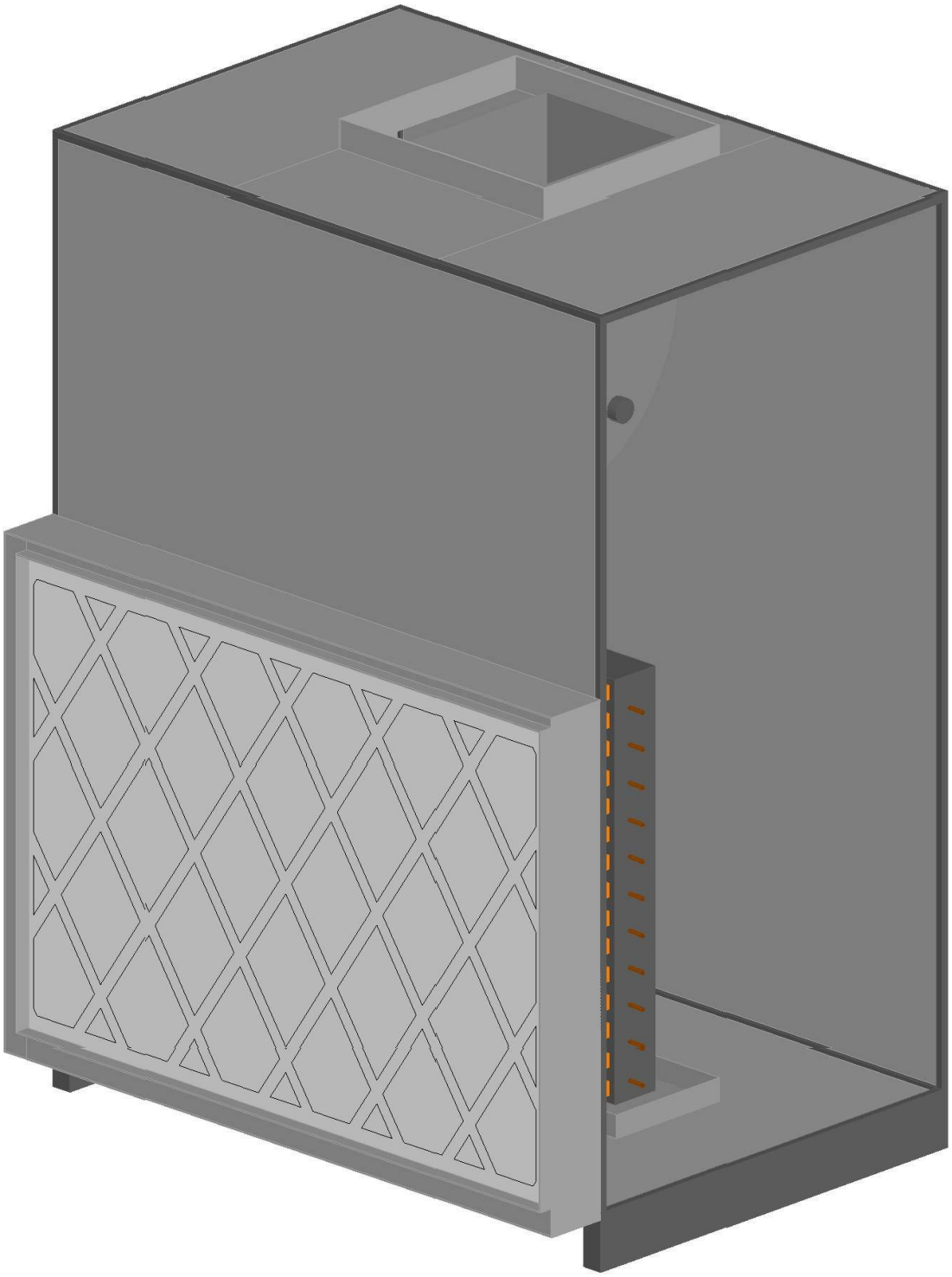

	Unit Tag: AHU-11 - Eiland (LH)			DAIKIN		
Product: PreciseLine® Air Handler	Project Name: Klein ISD Eiland ES AHU			13600 Industrial Park Blvd. Minneapolis, MN 55441		
Model: BCVD0401	Sales Office: HTS Texas			www.DaikinApplied.com Software Version: 07.40		
Sales Engineer:	Jan. 16, 2026	Ver/Rev:	Sheet 1 of 1	Scale: NTS	Tolerance: +/-0.25"	Dwg Units: in [mm]

No change to this drawing may be made unless approved in writing by Daikin Applied. Purchaser must determine that the equipment is fit and sufficient for the job specifications.

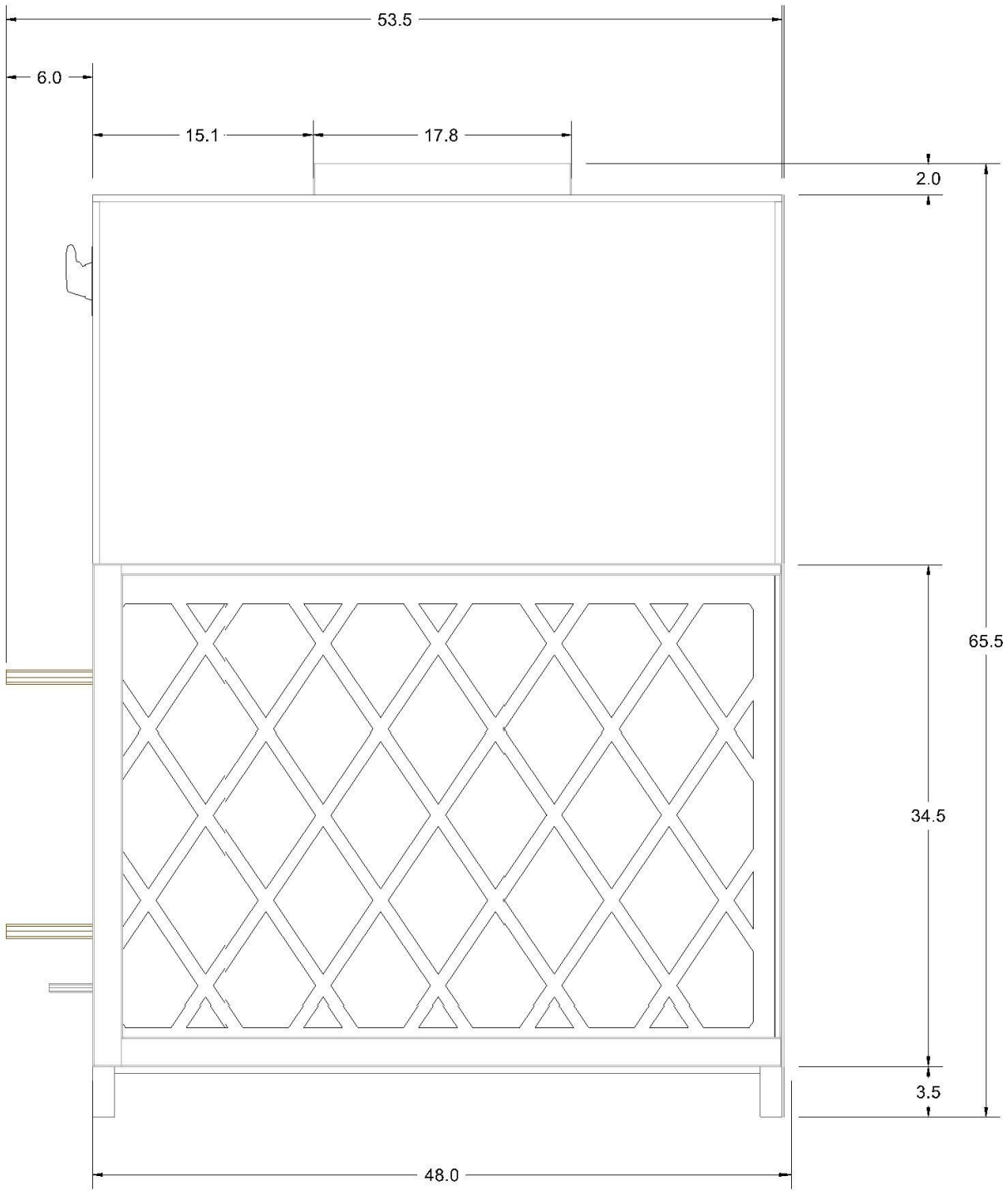

	Unit Tag: AHU-11 - Eiland (LH)			DAIKIN		
Product: PreciseLine® Air Handler	Project Name: Klein ISD Eiland ES AHU			13600 Industrial Park Blvd. Minneapolis, MN 55441		
Model: BCVD0401	Sales Office: HTS Texas			www.DaikinApplied.com	Software Version: 07.40	
Sales Engineer:	Jan. 16, 2026	Ver/Rev:	Sheet 1 of 1	Scale: NTS	Tolerance: +/-0.25"	Dwg Units: in [mm]

No change to this drawing may be made unless approved in writing by Daikin Applied. Purchaser must determine that the equipment is fit and sufficient for the job specifications.

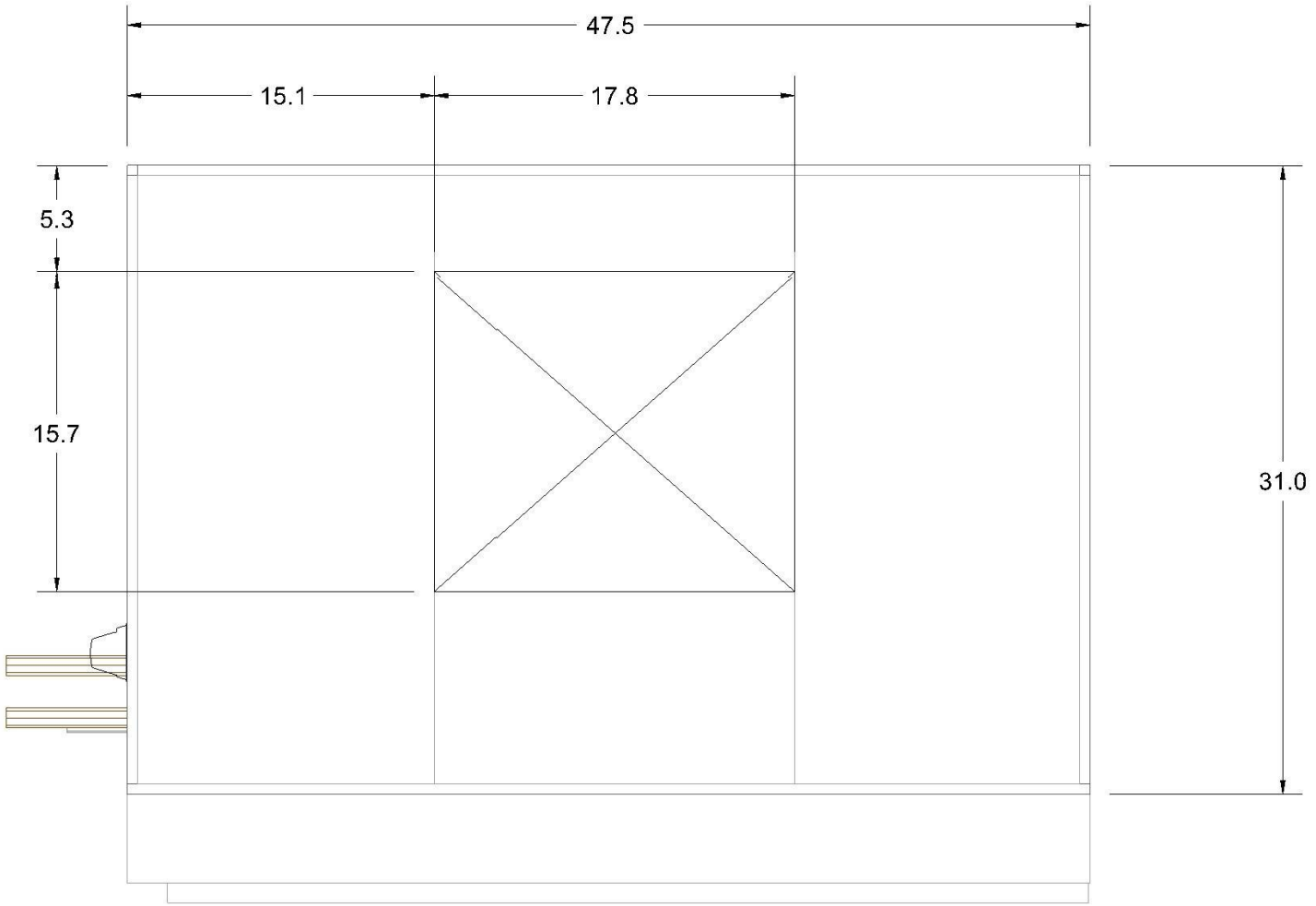

	Unit Tag: AHU-11 - Eiland (LH)			Sales Office: HTS Texas			DAIKIN
Product: PreciseLine® Air Handler	Project Name: Klein ISD Eiland ES AHU			Sales Engineer:			13600 Industrial Park Blvd. Minneapolis, MN 55441
Model: BCVD0401	Jan. 16, 2026	Ver/Rev:	Sheet: 1 of 1	Scale: NTS	Tolerance: +/- 0.25"	Dwg Units: in [mm]	www.DaikinApplied.com Software Version: 07.40

No change to this drawing may be made unless approved in writing by Daikin Applied. Purchaser must determine that the equipment is fit and sufficient for the job specifications.

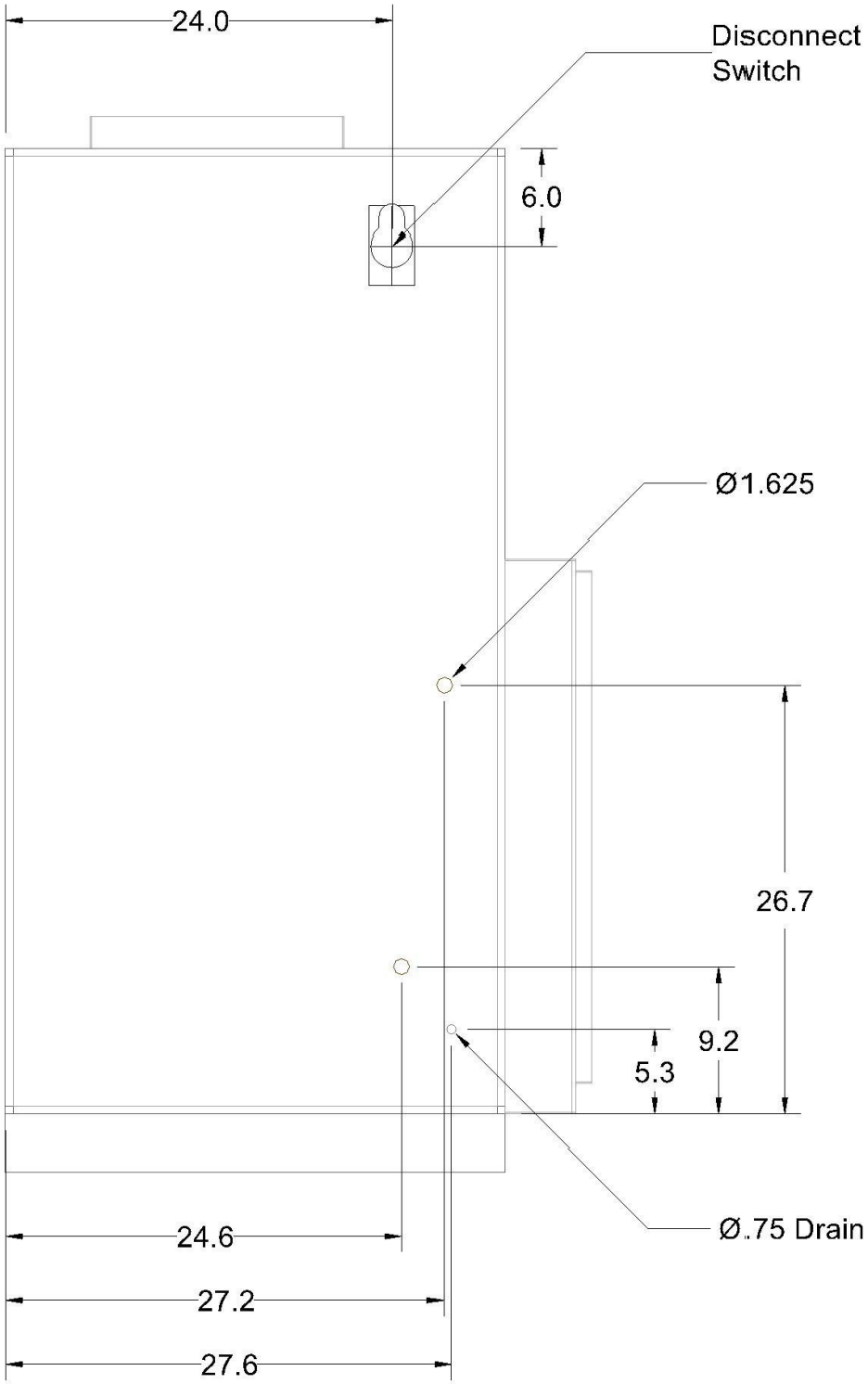

	Unit Tag: AHU-11 - Eiland (LH)			DAIKIN		
Product: PreciseLine® Air Handler	Project Name: Klein ISD Eiland ES AHU			13600 Industrial Park Blvd. Minneapolis, MN 55441		
Model: BCVD0401	Sales Office: HTS Texas			www.DaikinApplied.com	Software Version: 07.40	
Sales Engineer:	Jan. 16, 2026	Ver/Rev:	Sheet 1 of 1	Scale: NTS	Tolerance: +/-0.25"	Dwg Units: in [mm]

No change to this drawing may be made unless approved in writing by Daikin Applied. Purchaser must determine that the equipment is fit and sufficient for the job specifications.

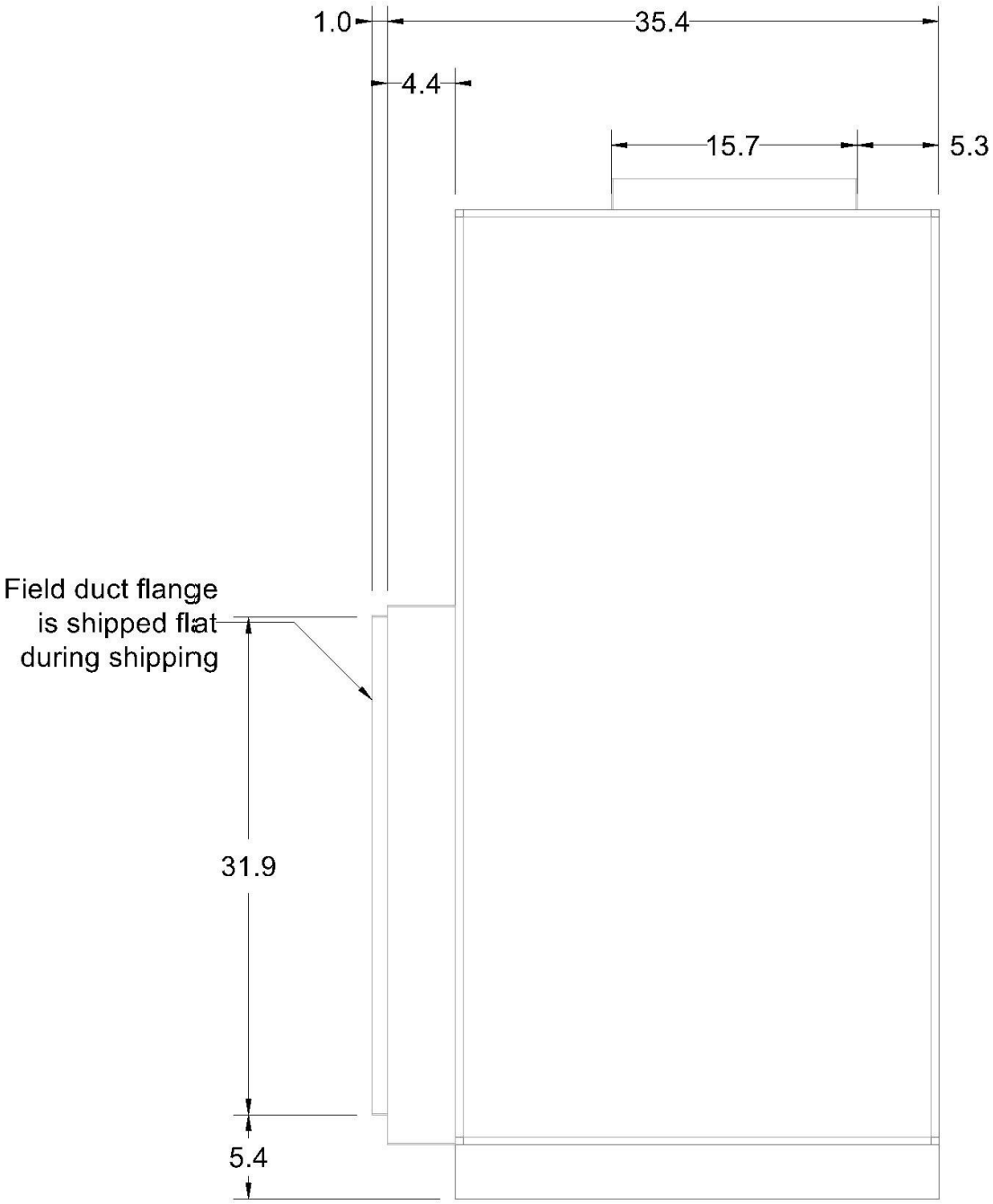

	Unit Tag: AHU-11 - Eiland (LH)			DAIKIN		
Product: PreciseLine® Air Handler	Project Name: Klein ISD Eiland ES AHU			13600 Industrial Park Blvd. Minneapolis, MN 55441		
Model: BCVD0401	Sales Office: HTS Texas			www.DaikinApplied.com	Software Version: 07.40	
Sales Engineer:	Jan. 16, 2026	Ver/Rev:	Sheet 1 of 1	Scale: NTS	Tolerance: +/-0.25"	Dwg Units: in [mm]

No change to this drawing may be made unless approved in writing by Daikin Applied. Purchaser must determine that the equipment is fit and sufficient for the job specifications.

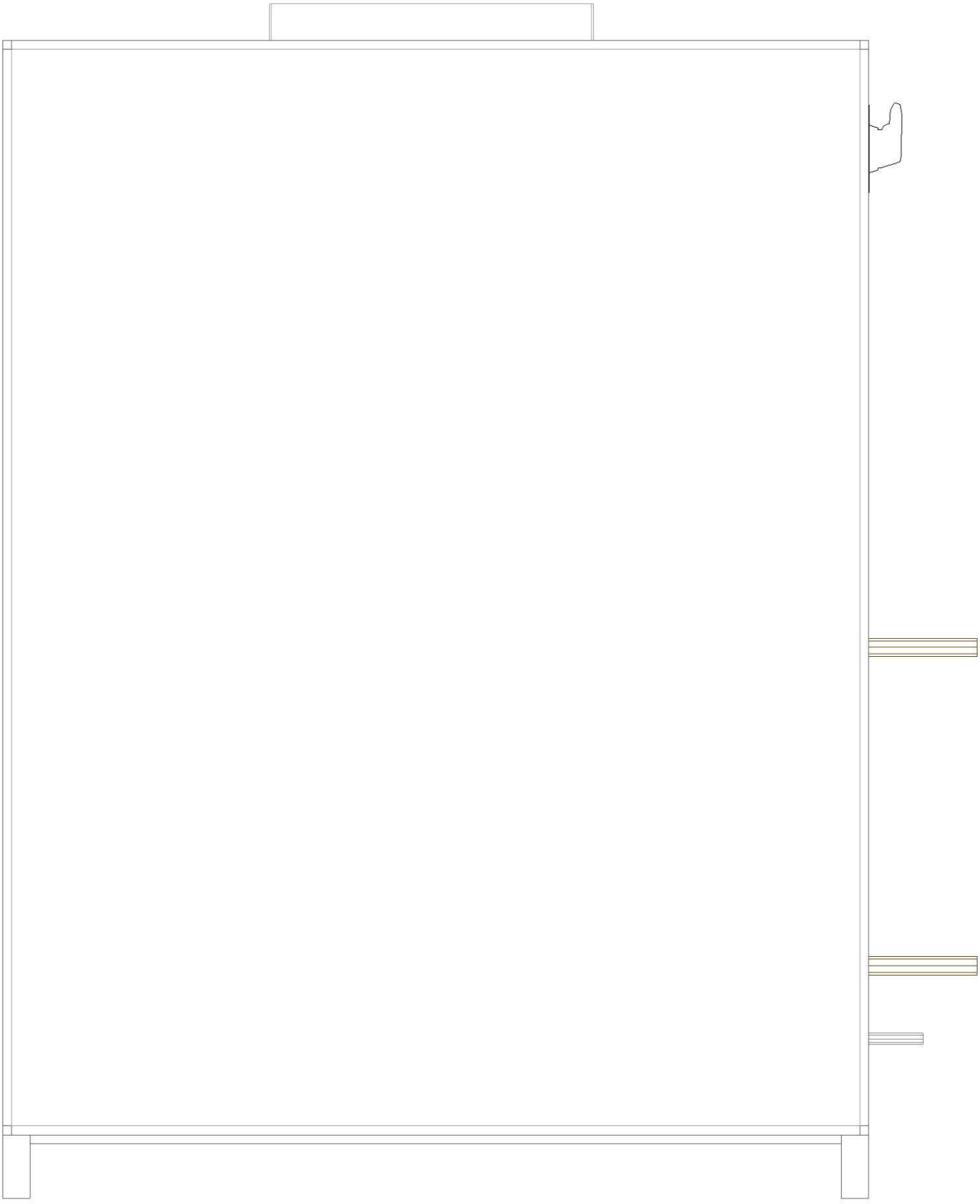

	Unit Tag: AHU-11 - Eiland (LH)			DAIKIN		
Product: PreciseLine® Air Handler	Project Name: Klein ISD Eiland ES AHU			13600 Industrial Park Blvd. Minneapolis, MN 55441		
Model: BCVD0401	Sales Office: HTS Texas			www.DaikinApplied.com	Software Version: 07.40	
Sales Engineer:	Jan. 16, 2026	Ver/Rev:	Sheet 1 of 1	Scale: NTS	Tolerance: +/-0.25"	Dwg Units: in [mm]

No change to this drawing may be made unless approved in writing by Daikin Applied. Purchaser must determine that the equipment is fit and sufficient for the job specifications.

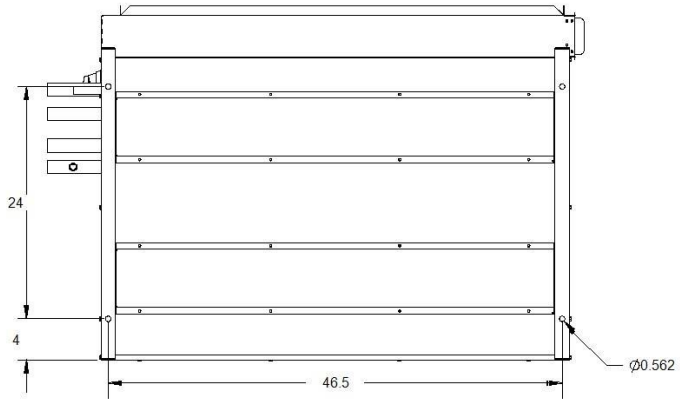

SECTION A-A

CABINET MOUNTING HOLE LOCATIONS

	Unit Tag: AHU-11 - Eiland (LH)			Sales Office: HTS Texas			DAIKIN
Product: PreciseLine® Air Handler	Project Name: Klein ISD Eiland ES AHU			Sales Engineer:			13600 Industrial Park Blvd. Minneapolis, MN 55441
Model: BCVD0401	Jan. 16, 2026	Ver/Rev:	Sheet: 1 of 1	Scale: NTS	Tolerance: +/- 0.25"	Dwg Units: in [mm]	www.DaikinApplied.com Software Version: 07.40

No change to this drawing may be made unless approved in writing by Daikin Applied. Purchaser must determine that the equipment is fit and sufficient for the job specifications.

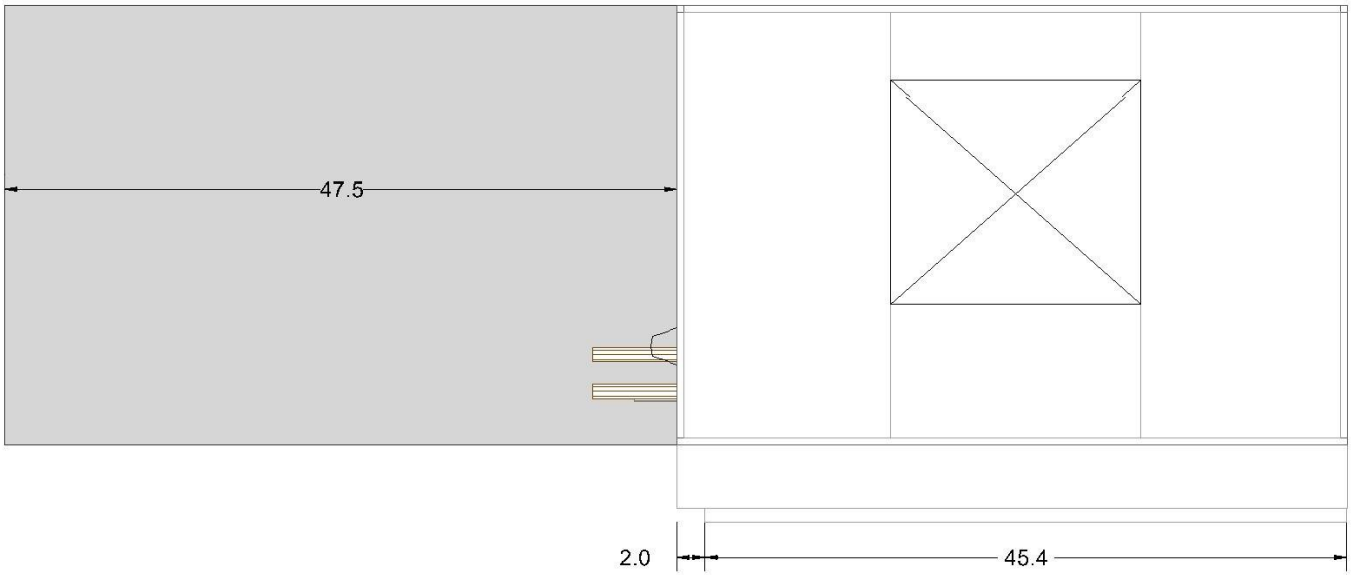

	Unit Tag: AHU-11 - Eiland (LH)			Sales Office: HTS Texas			DAIKIN
Product: PreciseLine® Air Handler	Project Name: Klein ISD Eiland ES AHU			Sales Engineer:			13600 Industrial Park Blvd. Minneapolis, MN 55441
Model: BCVD0401	Jan. 16, 2026	Ver/Rev:	Sheet: 1 of 1	Scale: NTS	Tolerance: +/- 0.25"	Dwg Units: in [mm]	www.DaikinApplied.com Software Version: 07.40

No change to this drawing may be made unless approved in writing by Daikin Applied. Purchaser must determine that the equipment is fit and sufficient for the job specifications.

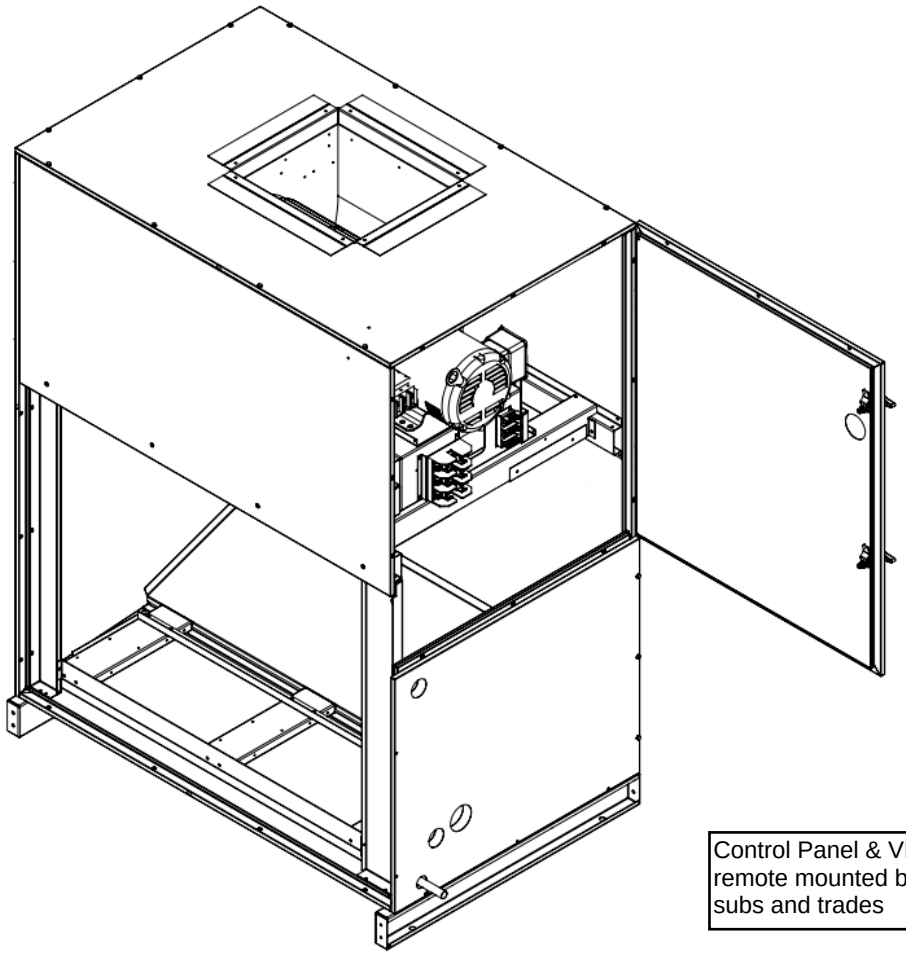

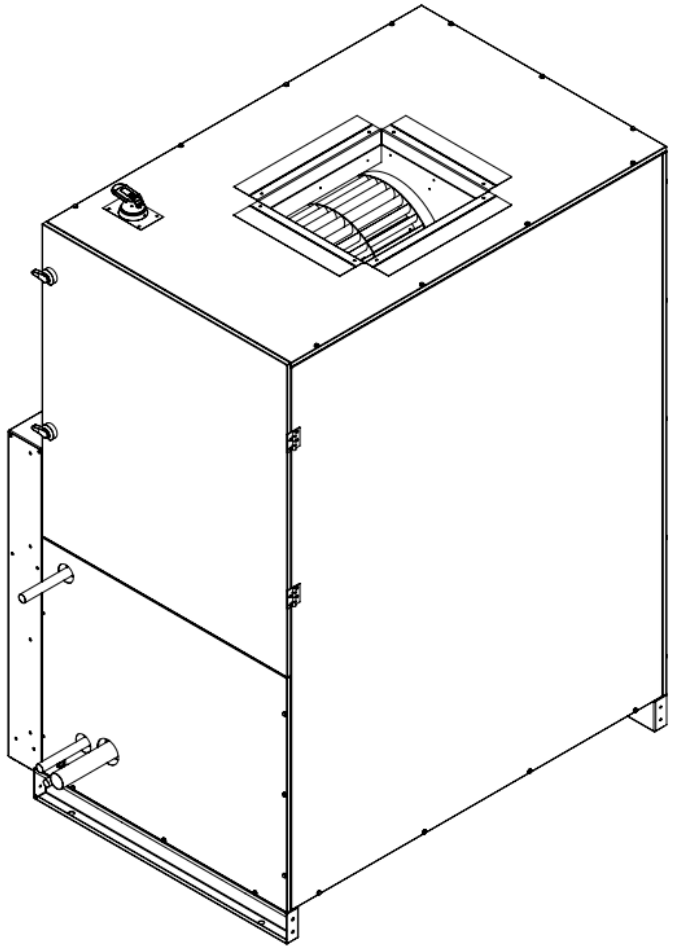

Control Panel & VFD to be remote mounted by Installing subs and trades

	Unit Tag: AHU-11 - Eiland (LH)			Sales Office: HTS Texas			DAIKIN
Product: PreciseLine® Air Handler	Project Name: Klein ISD Eiland ES AHU			Sales Engineer:			13600 Industrial Park Blvd. Minneapolis, MN 55441
Model: BCVD0401	Jan. 16, 2026	Ver/Rev:	Sheet: 1 of 1	Scale: NTS	Tolerance: +/- 0.25"	Dwg Units: in [mm]	www.DaikinApplied.com Software Version: 07.40

No change to this drawing may be made unless approved in writing by Daikin Applied. Purchaser must determine that the equipment is fit and sufficient for the job specifications.

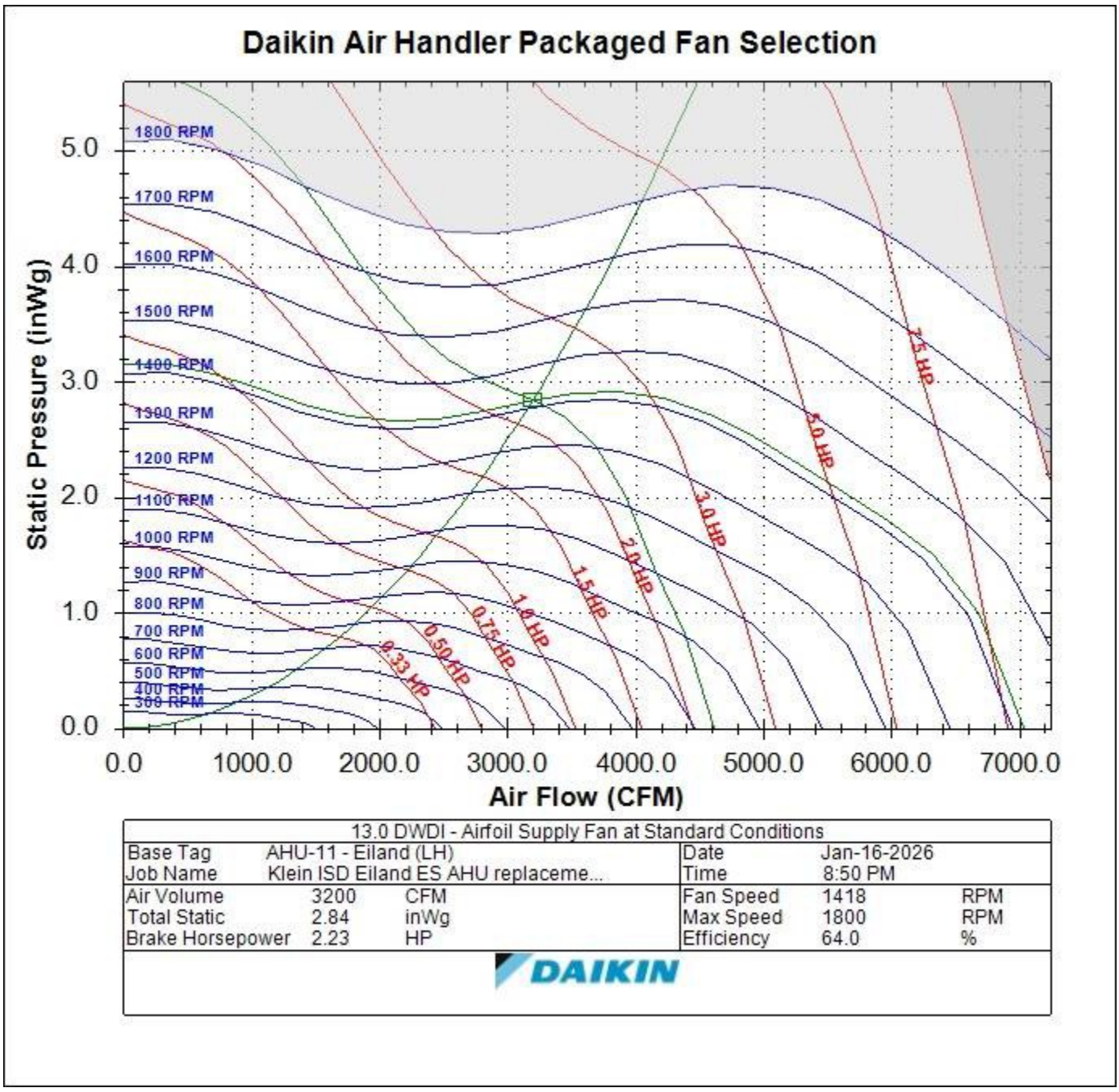
Daikin Air Handler Packaged Fan Selection
Static Pressure (inWg)
Air Flow (CFM)
0.0
1.0
2.0
3.0
4.0
5.0
0.0
1000.0
2000.0
3000.0
4000.0
5000.0
6000.0
7000.0
1800 RPM
1700 RPM
1600 RPM
1500 RPM
1400 RPM
1300 RPM
1200 RPM
1100 RPM
1000 RPM
900 RPM
800 RPM
700 RPM
600 RPM
500 RPM
400 RPM
300 RPM
0.33 HP
0.50 HP
0.75 HP
1.0 HP
1.5 HP
2.0 HP
3.0 HP
5.0 HP
7.5 HP
13.0 DWDI - Airfoil Supply Fan at Standard Conditions
Base Tag AHU-11 - Eiland (LH)
Job Name Klein ISD Eiland ES AHU replaceme...
Date Jan-16-2026
Time 8:50 PM
Air Volume 3200 CFM
Total Static 2.84 inWg
Brake Horsepower 2.23 HP
Fan Speed 1418 RPM
Max Speed 1800 RPM
Efficiency 64.0 %
DAIKIN

Job Information	*Technical Data Sheet*
Job Name	Klein ISD Eiland ES AHU replacements
Date	1/16/2026
Submitted By	Matt McPherson
Software Version	07.40
Unit Tag	AHU-12,16 - Eiland (RH)
FPA#	PL-250152-1



Unit Overview

Model Number	Voltage V/Hz/Phase	Airflow CFM	External Static Pressure inH_2O	Design Cooling Capacity Btu/hr
BCVD0301	460/60/3	2600	1.50	106826

Unit

Model Number:	BCVD0301
Unit Arrangement:	Vertical
Altitude:	0 ft

Physical

Dimensions and Weight (wet)

Length	Height	Width	Weight
31.0 in	61.5 in	44.0 in	402 lb

Construction

Insulation and Liners:	1" Injected Foam, R-6, Galvanized Steel Liner

Electrical

Field Connection	Unit FLA	Unit MCA	Unit MROPD	SCCR
Disconnect Switch	3.8 A	4.7 A	15 A	5 kA

Filter

Filter Access	Filter Depth	MERV Rating	(Quantity) Height x Width x Depth
Side	2 in	MERV 13	(2) 25 x 20

Primary Hydronic Coil

Physical

Fins per Inch	Rows	Casing Material	Face Area ft²	Face Velocity ft/min
12	6	Stainless Steel	6.2	417.3

Connection

Size	Type	Location
1.625	SWT	Right Hand

Drain Pan

Material	Connection
Stainless Steel	0.75 in

Performance

Capacity		Air Temperature			
		Entering		Leaving	
Total Btu/hr	Sensible Btu/hr	Dry Bulb °F	Wet Bulb °F	Dry Bulb °F	Wet Bulb °F
106826	69098	78.0	67.0	53.7	53.6

Fluid

Type	Entering Temperature °F	Leaving Temperature °F	Flow Rate gpm	Pressure Drop ft H_2O
Water	45.0	57.6	17.0	5.30

Supply Fan

Performance

Airflow	Total Static Pressure	Fan Speed	Controller Input Signal	Brake Horsepower	Total Input Power	Fan Energy Index	Altitude
2600	2.88 inH_2O	1735 rpm	9.6 VDC	2.04 HP	2.29 HP	1.223	0 ft

Motor

Type	(Qty) Horsepower	Motor Control	(Qty) FLA
FC Direct Drive NEMA Premium Efficiency Motor	(1) 3.0 HP	0-10V Modulating	(1) 3.8 A

Unit Discharge Conditions

AirTemperature

Motor Heat Btu/hr	Unit Leaving Dry Bulb °F	Unit Leaving Wet Bulb °F	Unit Leaving Dewpoint °F
5958	55.8	54.3	53.3

Supply Fan Total Pressure Drop Calculation

External Static Pressure:	1.50 inH_2O
Primary Filter:	0.31 inH_2O
Dirty/Additional Filter:	0.50 inH_2O
Cooling Coil:	0.57 inH_2O
Total Static Pressure (Supply):	2.88 inH_2O

Sound Power

	Sound Power (db)							
Frequency	**63 Hz**	**125 Hz**	**250 Hz**	**500 Hz**	**1 kHz**	**2 kHz**	**4 kHz**	**8 kHz**
Inlet	87	84	76	73	75	73	71	61
Discharge	95	90	83	81	80	80	77	71
Radiated	75	72	62	57	60	62	47	37

Options

Controls	
Overflow Switch:	Factory mounted Overflow Switch

Warranty

Parts:	1 year extended parts only

AHRI Certification

All equipment is rated and certified in accordance with AHRI 430.

Notes

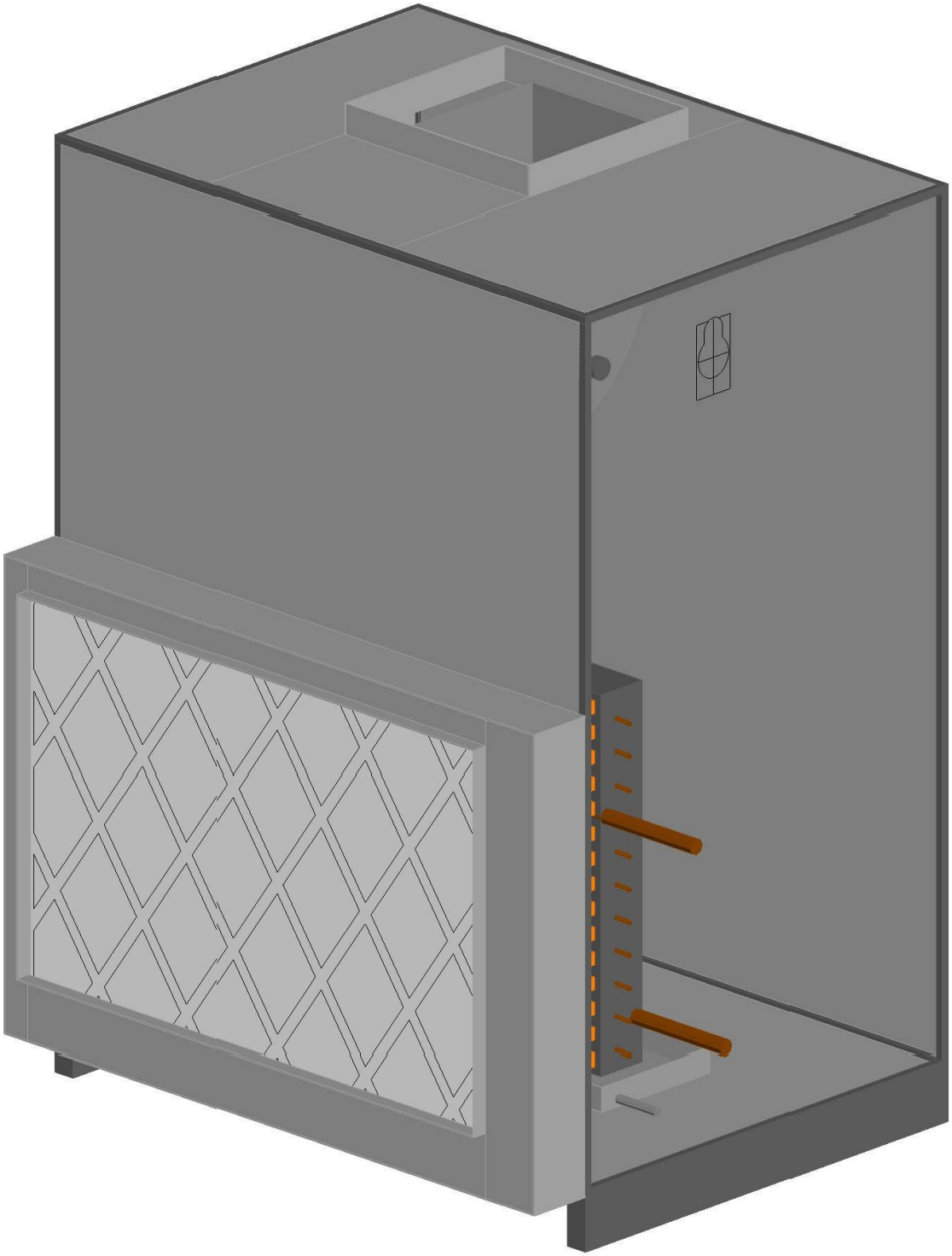

	Unit Tag: AHU-12,16 - Eiland (RH)			DAIKIN		
Product: PreciseLine® Air Handler	Project Name: Klein ISD Eiland ES AHU			13600 Industrial Park Blvd. Minneapolis, MN 55441		
Model: BCVD0301	Sales Office: HTS Texas			www.DaikinApplied.com Software Version: 07.40		
Sales Engineer:	Jan. 16, 2026	Ver/Rev:	Sheet 1 of 1	Scale: NTS	Tolerance: +/-0.25"	Dwg Units: in [mm]

No change to this drawing may be made unless approved in writing by Daikin Applied. Purchaser must determine that the equipment is fit and sufficient for the job specifications.

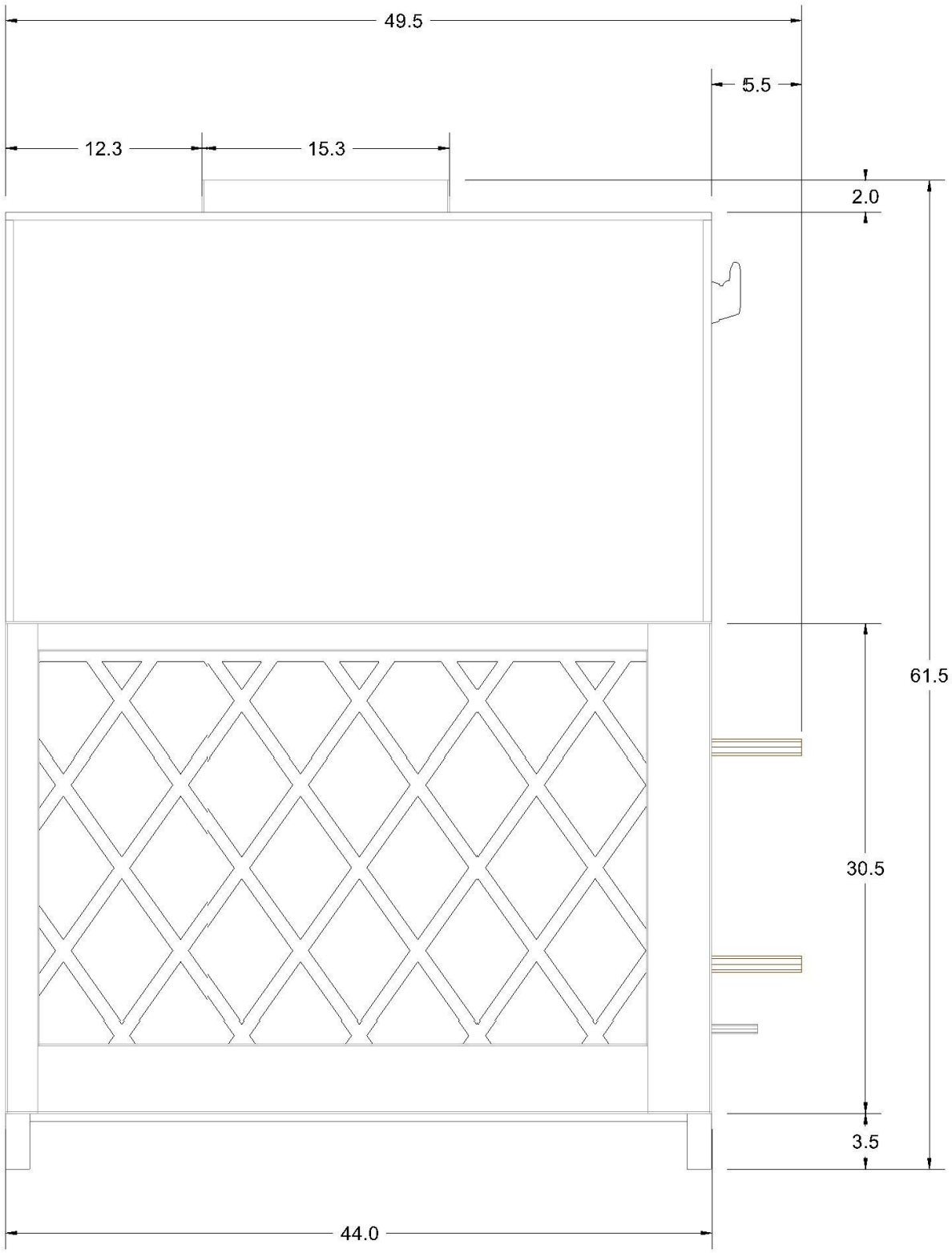

	Unit Tag: AHU-12,16 - Eiland (RH)			DAIKIN		
Product: PreciseLine® Air Handler	Project Name: Klein ISD Eiland ES AHU			13600 Industrial Park Blvd. Minneapolis, MN 55441		
Model: BCVD0301	Sales Office: HTS Texas			www.DaikinApplied.com	Software Version: 07.40	
Sales Engineer:	Jan. 16, 2026	Ver/Rev:	Sheet 1 of 1	Scale: NTS	Tolerance: +/-0.25"	Dwg Units: in [mm]

No change to this drawing may be made unless approved in writing by Daikin Applied. Purchaser must determine that the equipment is fit and sufficient for the job specifications.

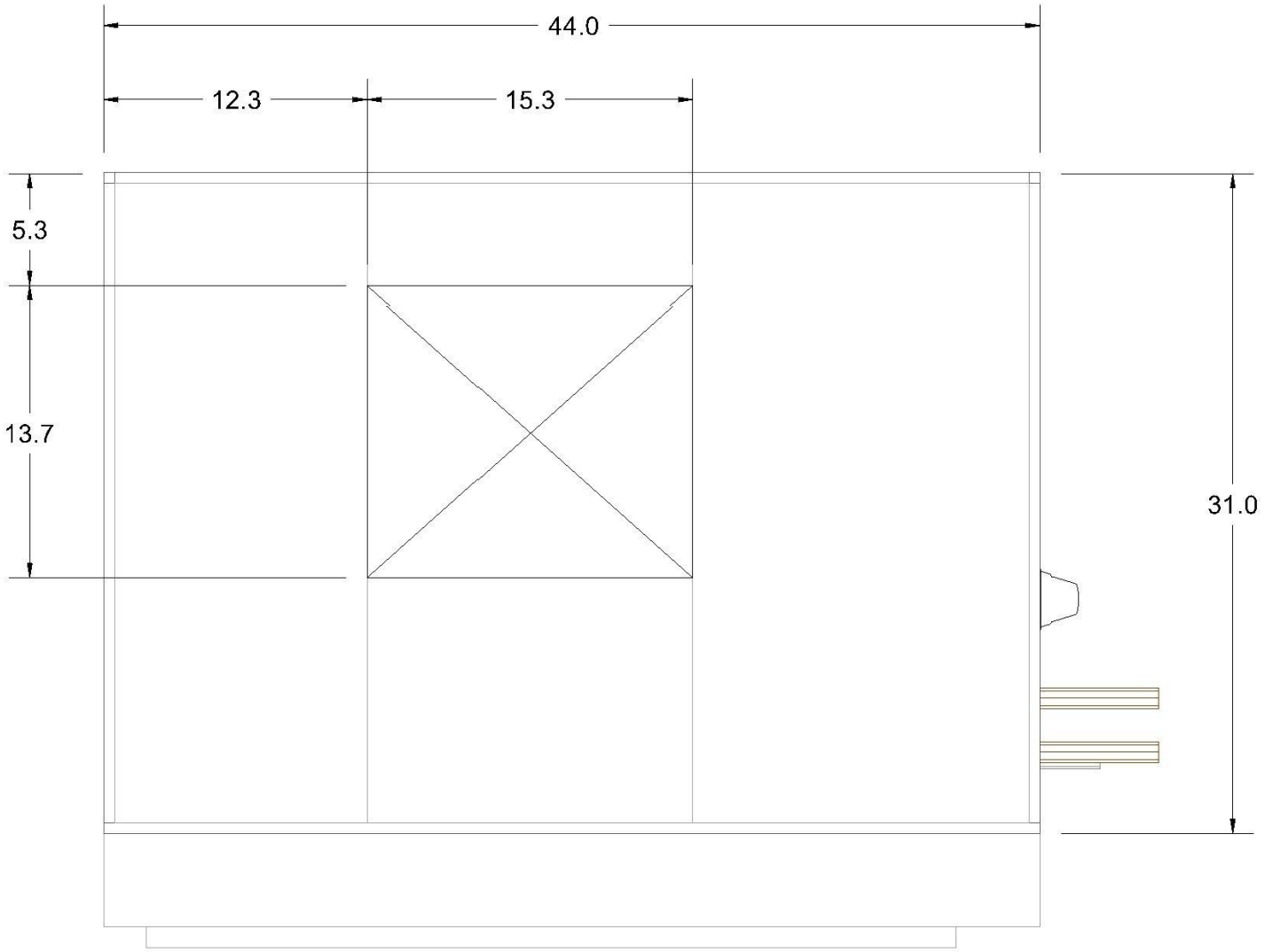

	Unit Tag: AHU-12,16 - Eiland (RH)			Sales Office: HTS Texas			DAIKIN
Product: PreciseLine® Air Handler	Project Name: Klein ISD Eiland ES AHU			Sales Engineer:			13600 Industrial Park Blvd. Minneapolis, MN 55441
Model: BCVD0301	Jan. 16, 2026	Ver/Rev:	Sheet: 1 of 1	Scale: NTS	Tolerance: +/- 0.25"	Dwg Units: in [mm]	www.DaikinApplied.com Software Version: 07.40

No change to this drawing may be made unless approved in writing by Daikin Applied. Purchaser must determine that the equipment is fit and sufficient for the job specifications.

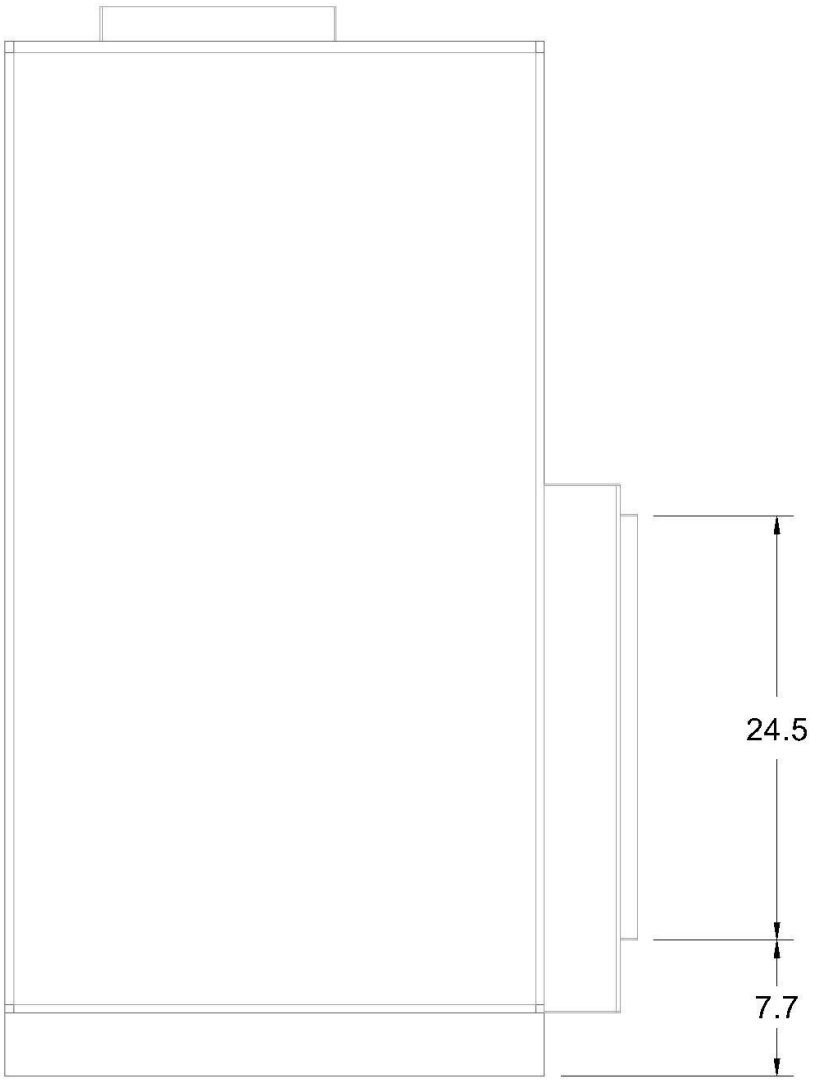

	Unit Tag: AHU-12,16 - Eiland (RH)			DAIKIN		
Product: PreciseLine® Air Handler	Project Name: Klein ISD Eiland ES AHU			13600 Industrial Park Blvd. Minneapolis, MN 55441		
Model: BCVD0301	Sales Office: HTS Texas			www.DaikinApplied.com Software Version: 07.40		
Sales Engineer:	Jan. 16, 2026	Ver/Rev:	Sheet 1 of 1	Scale: NTS	Tolerance: +/-0.25"	Dwg Units: in [mm]

No change to this drawing may be made unless approved in writing by Daikin Applied. Purchaser must determine that the equipment is fit and sufficient for the job specifications.

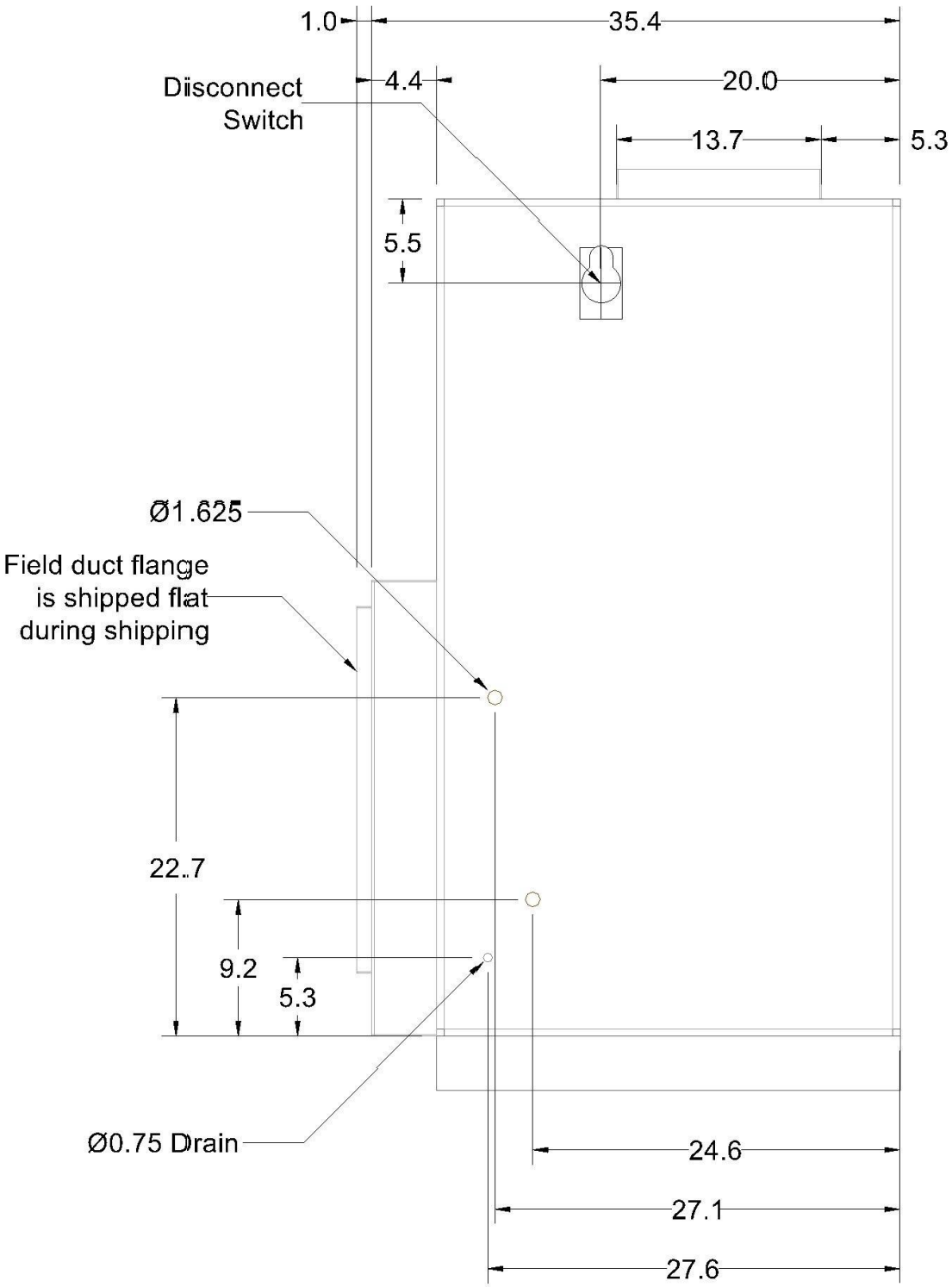

	Unit Tag: AHU-12,16 - Eiland (RH)			DAIKIN		
Product: PreciseLine® Air Handler	Project Name: Klein ISD Eiland ES AHU			13600 Industrial Park Blvd. Minneapolis, MN 55441		
Model: BCVD0301	Sales Office: HTS Texas			www.DaikinApplied.com	Software Version: 07.40	
Sales Engineer:	Jan. 16, 2026	Ver/Rev:	Sheet 1 of 1	Scale: NTS	Tolerance: +/-0.25"	Dwg Units: in [mm]

No change to this drawing may be made unless approved in writing by Daikin Applied. Purchaser must determine that the equipment is fit and sufficient for the job specifications.

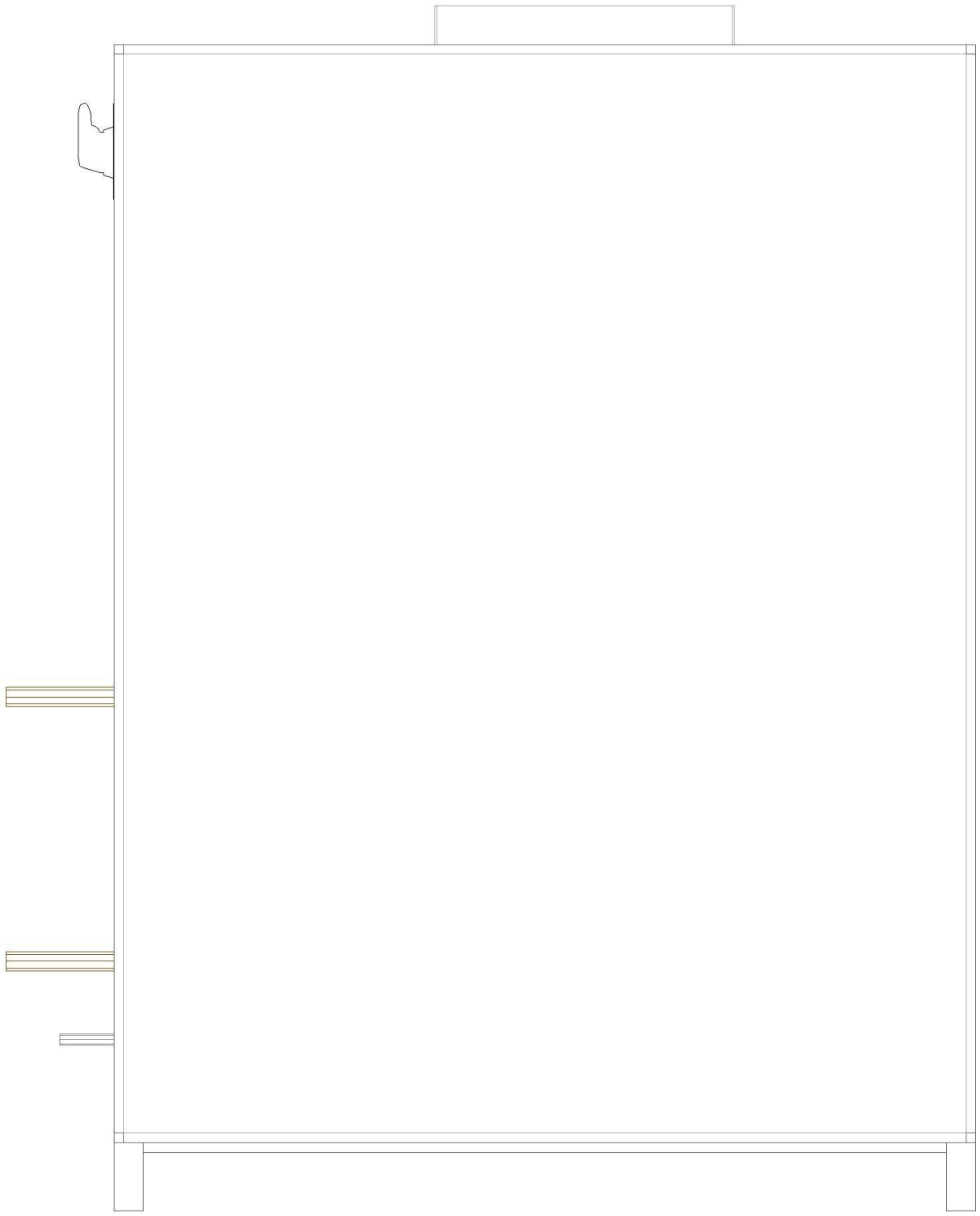

	Unit Tag: AHU-12,16 - Eiland (RH)			DAIKIN		
Product: PreciseLine® Air Handler	Project Name: Klein ISD Eiland ES AHU			13600 Industrial Park Blvd. Minneapolis, MN 55441		
Model: BCVD0301	Sales Office: HTS Texas			www.DaikinApplied.com Software Version: 07.40		
Sales Engineer:	Jan. 16, 2026	Ver/Rev:	Sheet 1 of 1	Scale: NTS	Tolerance: +/-0.25"	Dwg Units: in [mm]

No change to this drawing may be made unless approved in writing by Daikin Applied. Purchaser must determine that the equipment is fit and sufficient for the job specifications.

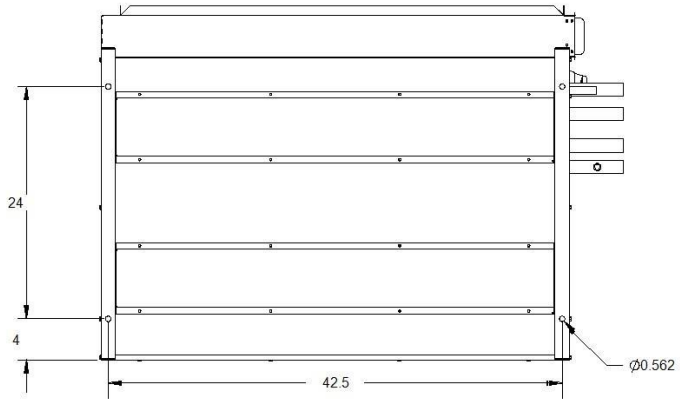

SECTION A-A

CABINET MOUNTING HOLE LOCATIONS

	Unit Tag: AHU-12,16 - Eiland (RH)			Sales Office: HTS Texas			DAIKIN
Product: PreciseLine® Air Handler	Project Name: Klein ISD Eiland ES AHU			Sales Engineer:			13600 Industrial Park Blvd. Minneapolis, MN 55441
Model: BCVD0301	Jan. 16, 2026	Ver/Rev:	Sheet: 1 of 1	Scale: NTS	Tolerance: +/- 0.25"	Dwg Units: in [mm]	www.DaikinApplied.com Software Version: 07.40

No change to this drawing may be made unless approved in writing by Daikin Applied. Purchaser must determine that the equipment is fit and sufficient for the job specifications.

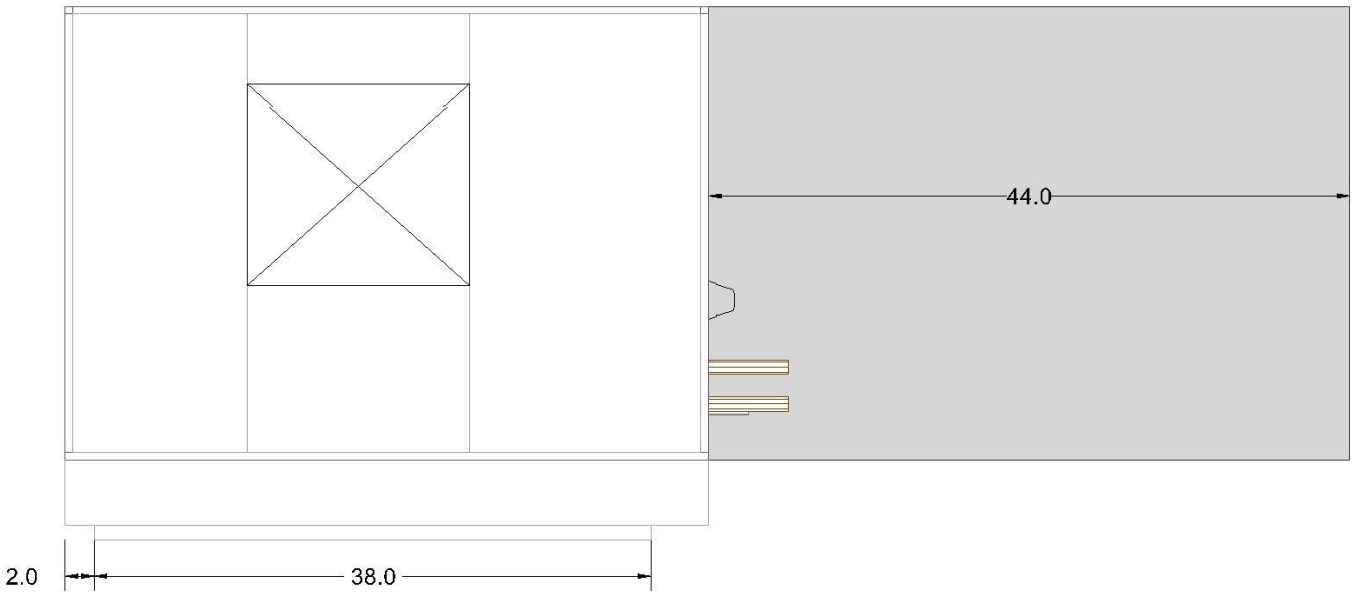

	Unit Tag: AHU-12,16 - Eiland (RH)			Sales Office: HTS Texas			DAIKIN
Product: PreciseLine® Air Handler	Project Name: Klein ISD Eiland ES AHU			Sales Engineer:			13600 Industrial Park Blvd. Minneapolis, MN 55441
Model: BCVD0301	Jan. 16, 2026	Ver/Rev:	Sheet: 1 of 1	Scale: NTS	Tolerance: +/- 0.25"	Dwg Units: in [mm]	www.DaikinApplied.com Software Version: 07.40

No change to this drawing may be made unless approved in writing by Daikin Applied. Purchaser must determine that the equipment is fit and sufficient for the job specifications.

Control Panel & VFD to be remote mounted by Installing subs and trades

	Unit Tag: AHU-12,16 - Eiland (RH)			Sales Office: HTS Texas			DAIKIN
Product: PreciseLine® Air Handler	Project Name: Klein ISD Eiland ES AHU			Sales Engineer:			13600 Industrial Park Blvd. Minneapolis, MN 55441
Model: BCVD0301	Jan. 16, 2026	Ver/Rev:	Sheet: 1 of 1	Scale: NTS	Tolerance: +/- 0.25"	Dwg Units: in [mm]	www.DaikinApplied.com Software Version: 07.40

No change to this drawing may be made unless approved in writing by Daikin Applied. Purchaser must determine that the equipment is fit and sufficient for the job specifications.

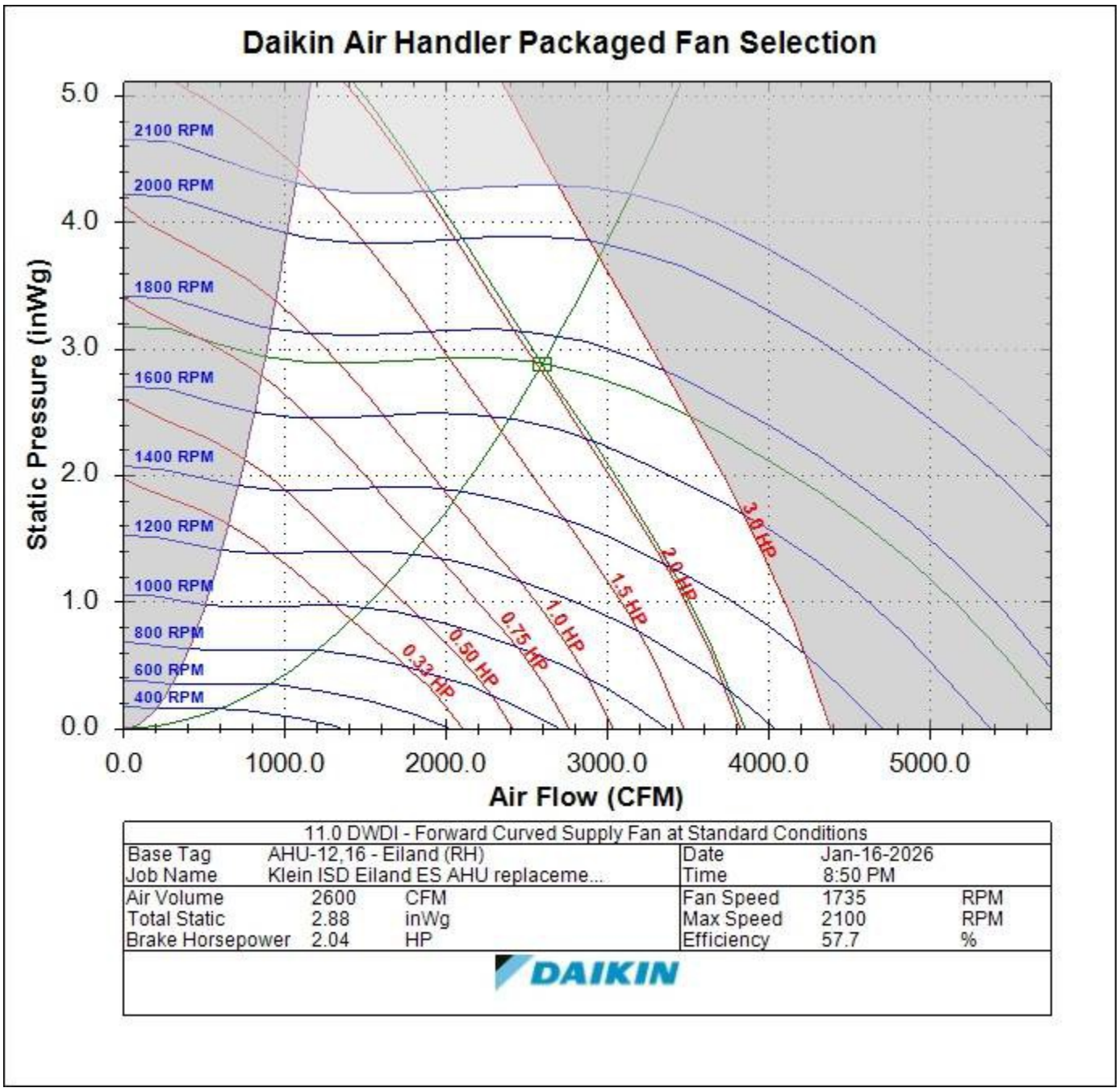

11.0 DWDI - Forward Curved Supply Fan at Standard Conditions					
Base Tag	AHU-12,16 - Eiland (RH)		Date	Jan-16-2026	
Job Name	Klein ISD Eiland ES AHU replaceme...		Time	8:50 PM	
Air Volume	2600	CFM	Fan Speed	1735	RPM
Total Static	2.88	inWg	Max Speed	2100	RPM
Brake Horsepower	2.04	HP	Efficiency	57.7	%

DAIKIN

Job Information	*Technical Data Sheet*
Job Name	Klein ISD Eiland ES AHU replacements
Date	1/16/2026
Submitted By	Matt McPherson
Software Version	07.40
Unit Tag	AHU-13 - Eiland (LH)
FPA#	PL-250152-1



Unit Overview

Model Number	Voltage V/Hz/Phase	Airflow CFM	External Static Pressure inH_2O	Design Cooling Capacity Btu/hr
BCVD0401	460/60/3	4000	1.50	160066

Unit

Model Number:	BCVD0401
Unit Arrangement:	Vertical
Altitude:	0 ft

Physical

Dimensions and Weight (wet)

Length	Height	Width	Weight
31.0 in	65.5 in	47.5 in	445 lb

Construction

Insulation and Liners:	1" Injected Foam, R-6, Galvanized Steel Liner

Electrical

Field Connection	Unit FLA	Unit MCA	Unit MROPD	SCCR
Disconnect Switch	6.2 A	7.7 A	15 A	5 kA

Filter

Filter Access	Filter Depth	MERV Rating	(Quantity) Height x Width x Depth
Side	2 in	MERV 13	(2) 12 x 24, (2) 20 x 24

Primary Hydronic Coil

Physical

Fins per Inch	Rows	Casing Material	Face Area ft^2	Face Velocity ft/min
14	6	Stainless Steel	8.0	498.8

Connection

Size	Type	Location
1.625	SWT	Left Hand

Drain Pan

Material	Connection
Stainless Steel	0.75 in

Performance

Capacity		Air Temperature			
		Entering		Leaving	
Total Btu/hr	Sensible Btu/hr	Dry Bulb °F	Wet Bulb °F	Dry Bulb °F	Wet Bulb °F
160066	104638	78.0	67.0	54.1	54.0

Fluid

Type	Entering Temperature °F	Leaving Temperature °F	Flow Rate gpm	Pressure Drop ft H_2O
Water	45.0	57.3	26.0	3.87

Supply Fan

Performance

Airflow	Total Static Pressure	Fan Speed	Controller Input Signal	Brake Horsepower	Total Input Power	Fan Energy Index	Altitude
4000	3.24 inH_2O	1494 rpm	8.3 VDC	3.13 HP	3.48 HP	1.301	0 ft

Motor

Type	(Qty) Horsepower	Motor Control	(Qty) FLA
FC Direct Drive NEMA Premium Efficiency Motor	(1) 5.0 HP	0-10V Modulating	(1) 6.2 A

Unit Discharge Conditions

AirTemperature

Motor Heat Btu/hr	Unit Leaving Dry Bulb °F	Unit Leaving Wet Bulb °F	Unit Leaving Dewpoint °F
9247	56.2	54.7	53.7

Supply Fan Total Pressure Drop Calculation

External Static Pressure:	1.50 inH_2O
Primary Filter:	0.37 inH_2O
Dirty/Additional Filter:	0.50 inH_2O
Cooling Coil:	0.87 inH_2O
Total Static Pressure (Supply):	3.24 inH_2O

Sound Power

	Sound Power (db)							
Frequency	**63 Hz**	**125 Hz**	**250 Hz**	**500 Hz**	**1 kHz**	**2 kHz**	**4 kHz**	**8 kHz**
Inlet	85	83	78	74	74	68	65	49
Discharge	93	89	86	83	81	78	76	67
Radiated	73	70	65	58	60	61	45	33

Options

Controls	
Overflow Switch:	Factory mounted Overflow Switch

Warranty

Parts:	1 year extended parts only

AHRI Certification

All equipment is rated and certified in accordance with AHRI 430.

Notes

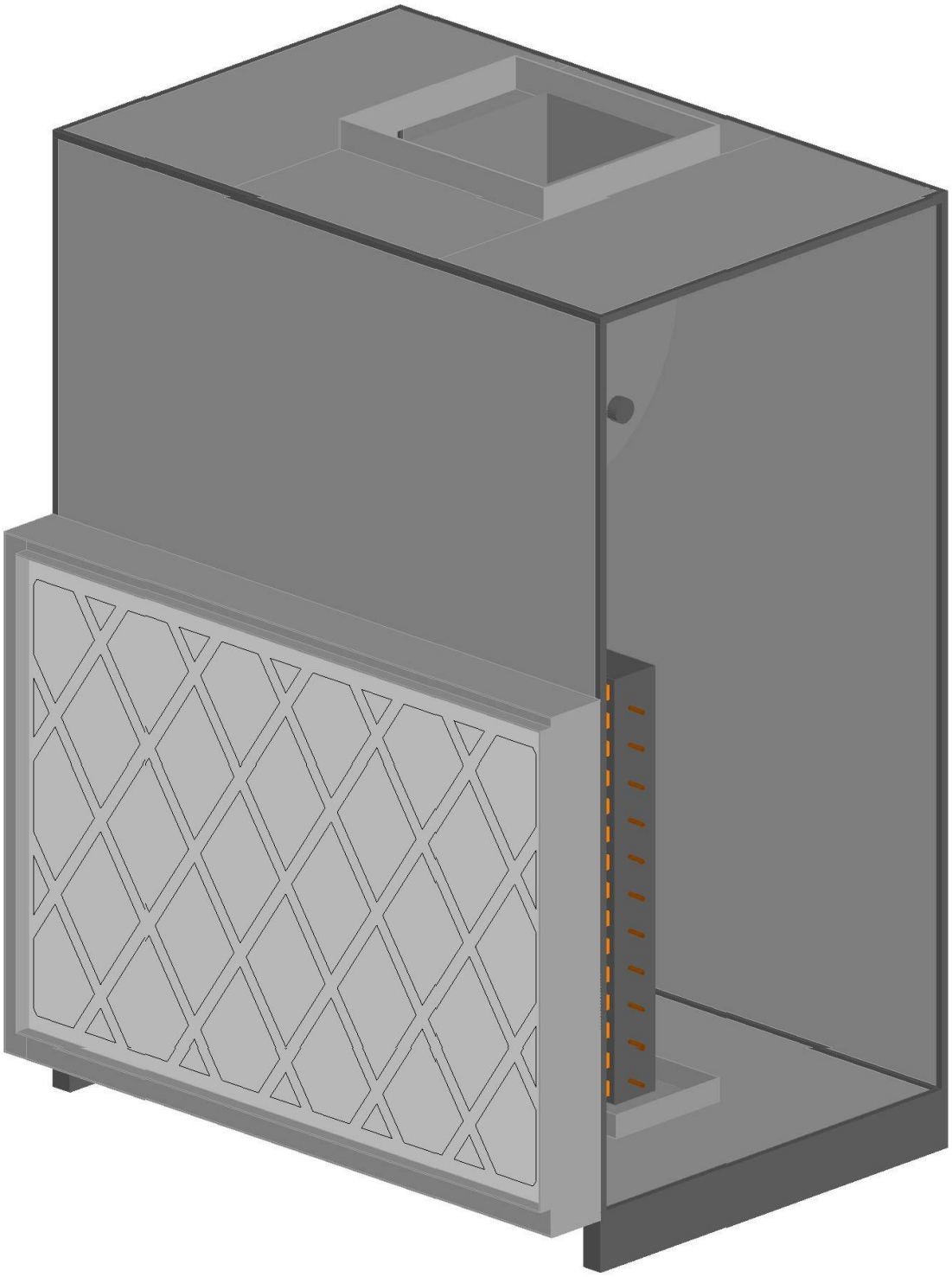

	Unit Tag: AHU-13 - Eiland (LH)			DAIKIN		
Product: PreciseLine® Air Handler	Project Name: Klein ISD Eiland ES AHU			13600 Industrial Park Blvd. Minneapolis, MN 55441		
Model: BCVD0401	Sales Office: HTS Texas			www.DaikinApplied.com Software Version: 07.40		
Sales Engineer:	Jan. 16, 2026	Ver/Rev:	Sheet 1 of 1	Scale: NTS	Tolerance: +/-0.25"	Dwg Units: in [mm]

No change to this drawing may be made unless approved in writing by Daikin Applied. Purchaser must determine that the equipment is fit and sufficient for the job specifications.

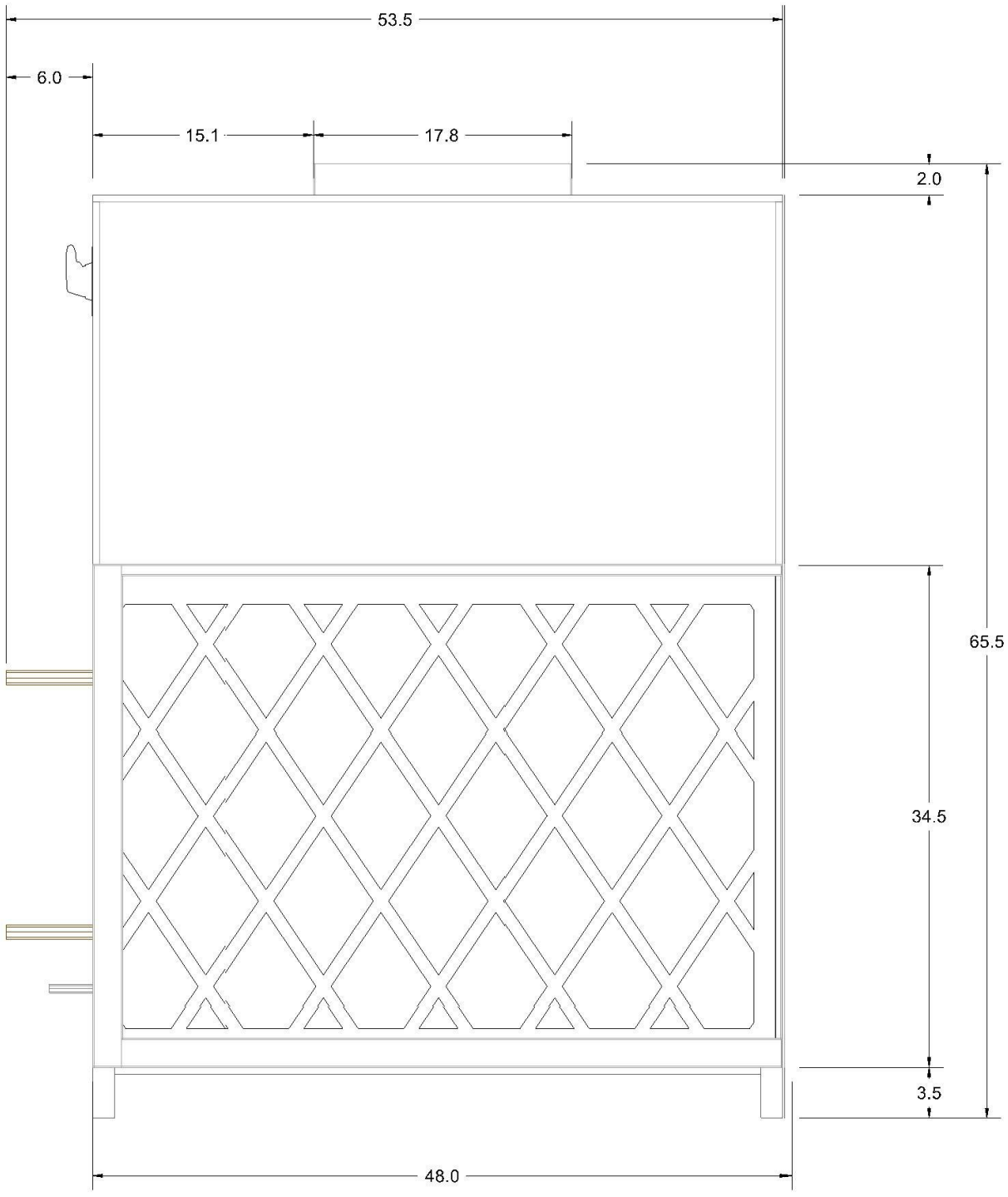

	Unit Tag: AHU-13 - Eiland (LH)			DAIKIN		
Product: PreciseLine® Air Handler	Project Name: Klein ISD Eiland ES AHU			13600 Industrial Park Blvd. Minneapolis, MN 55441		
Model: BCVD0401	Sales Office: HTS Texas			www.DaikinApplied.com	Software Version: 07.40	
Sales Engineer:	Jan. 16, 2026	Ver/Rev:	Sheet 1 of 1	Scale: NTS	Tolerance: +/-0.25"	Dwg Units: in [mm]

No change to this drawing may be made unless approved in writing by Daikin Applied. Purchaser must determine that the equipment is fit and sufficient for the job specifications.

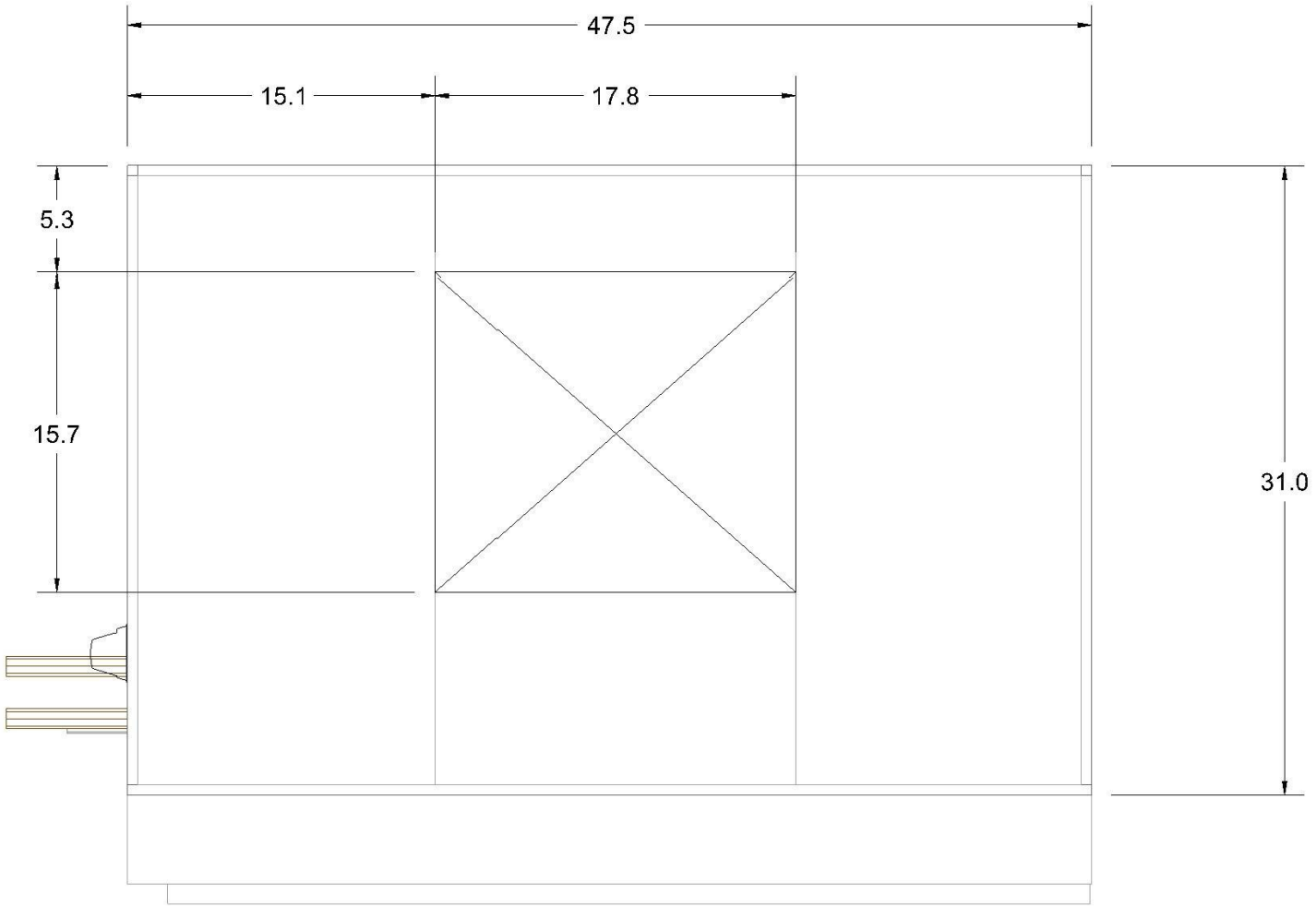

	Unit Tag: AHU-13 - Eiland (LH)			Sales Office: HTS Texas			DAIKIN
Product: PreciseLine® Air Handler	Project Name: Klein ISD Eiland ES AHU			Sales Engineer:			13600 Industrial Park Blvd. Minneapolis, MN 55441
Model: BCVD0401	Jan. 16, 2026	Ver/Rev:	Sheet: 1 of 1	Scale: NTS	Tolerance: +/- 0.25"	Dwg Units: in [mm]	www.DaikinApplied.com Software Version: 07.40

No change to this drawing may be made unless approved in writing by Daikin Applied. Purchaser must determine that the equipment is fit and sufficient for the job specifications.

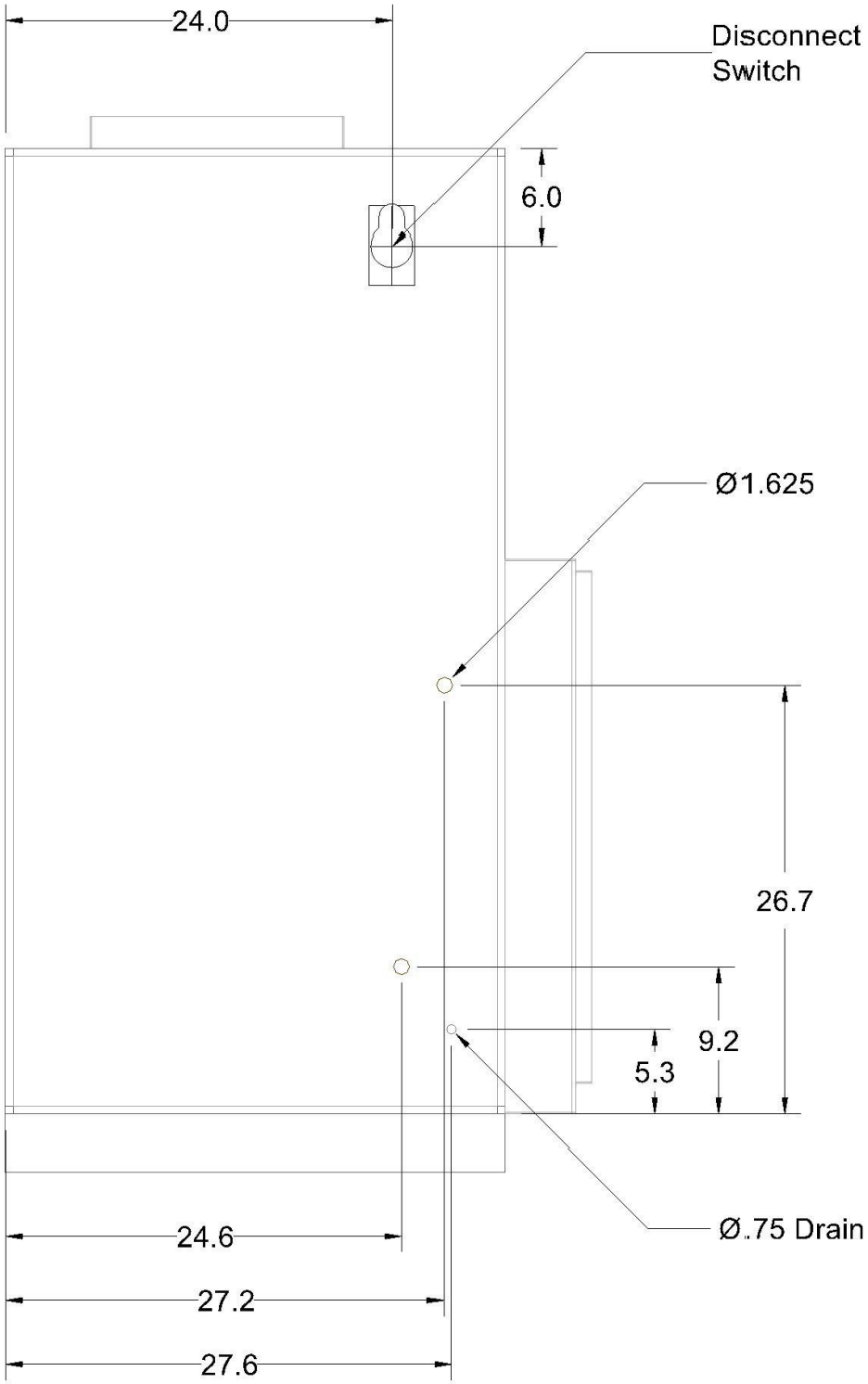

	Unit Tag: AHU-13 - Eiland (LH)			DAIKIN		
Product: PreciseLine® Air Handler	Project Name: Klein ISD Eiland ES AHU			13600 Industrial Park Blvd. Minneapolis, MN 55441		
Model: BCVD0401	Sales Office: HTS Texas			www.DaikinApplied.com	Software Version: 07.40	
Sales Engineer:	Jan. 16, 2026	Ver/Rev:	Sheet 1 of 1	Scale: NTS	Tolerance: +/-0.25"	Dwg Units: in [mm]

No change to this drawing may be made unless approved in writing by Daikin Applied. Purchaser must determine that the equipment is fit and sufficient for the job specifications.

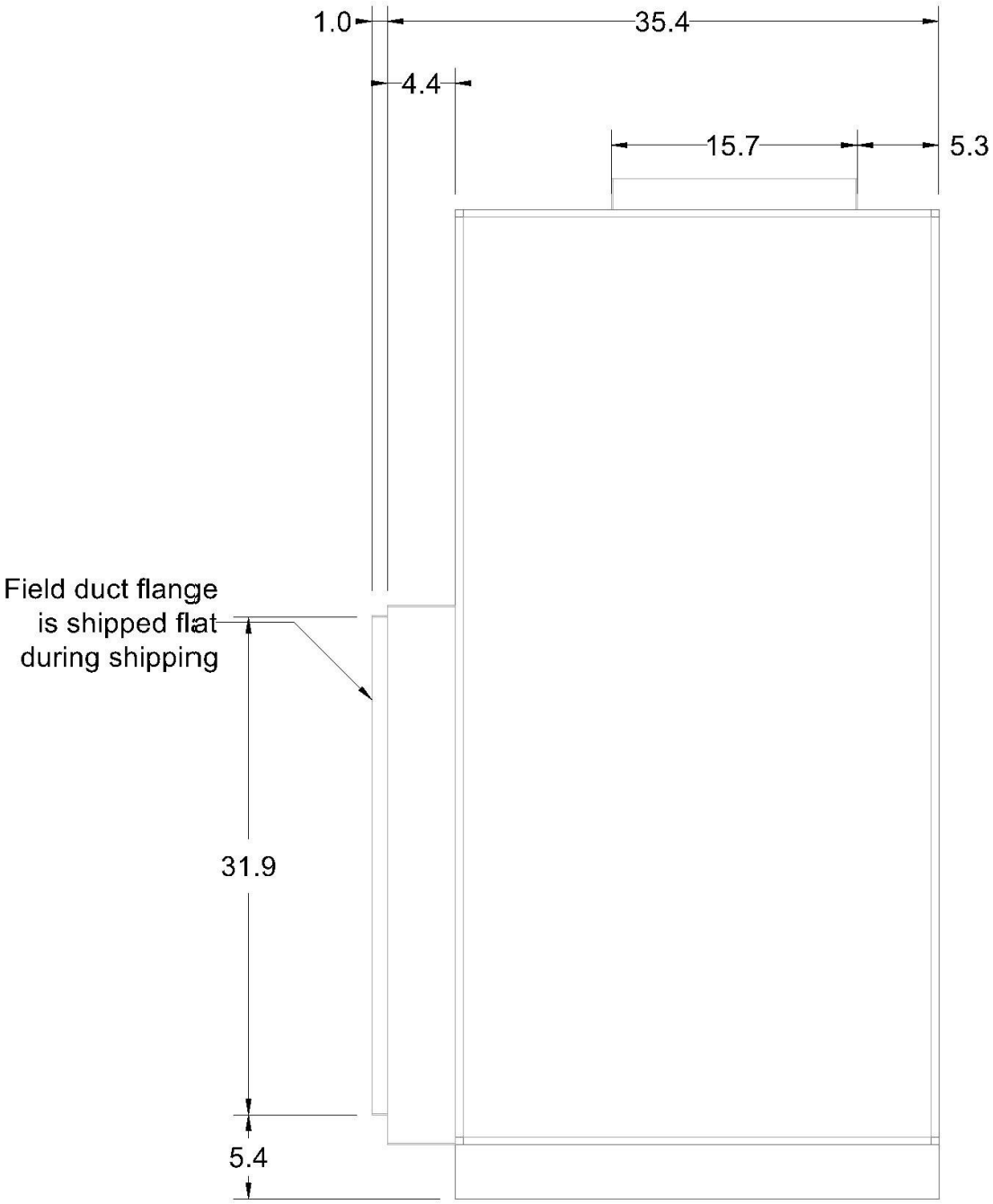

	Unit Tag: AHU-13 - Eiland (LH)			DAIKIN		
Product: PreciseLine® Air Handler	Project Name: Klein ISD Eiland ES AHU			13600 Industrial Park Blvd. Minneapolis, MN 55441		
Model: BCVD0401	Sales Office: HTS Texas			www.DaikinApplied.com	Software Version: 07.40	
Sales Engineer:	Jan. 16, 2026	Ver/Rev:	Sheet 1 of 1	Scale: NTS	Tolerance: +/-0.25"	Dwg Units: in [mm]

No change to this drawing may be made unless approved in writing by Daikin Applied. Purchaser must determine that the equipment is fit and sufficient for the job specifications.

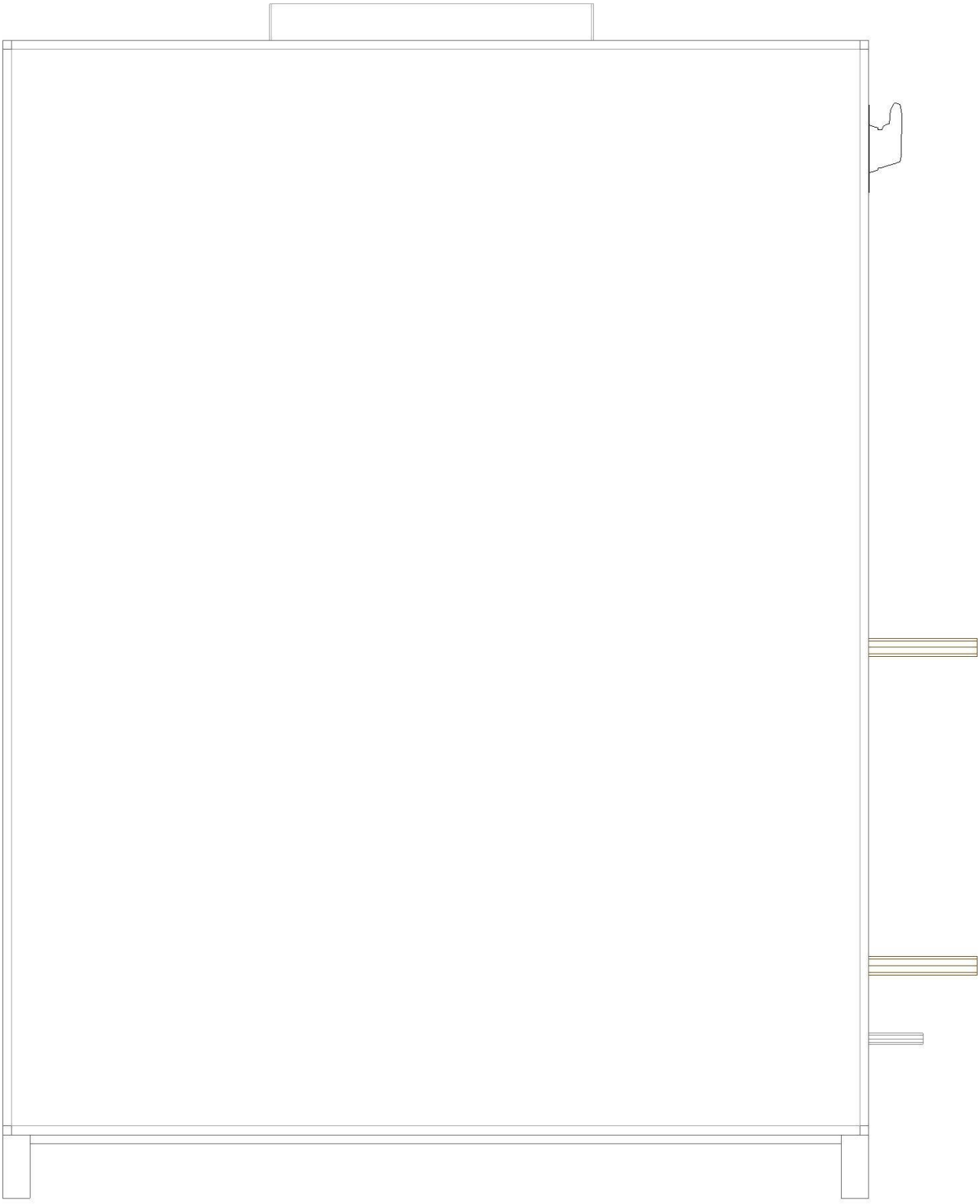

	Unit Tag: AHU-13 - Eiland (LH)			DAIKIN		
Product: PreciseLine® Air Handler	Project Name: Klein ISD Eiland ES AHU			13600 Industrial Park Blvd. Minneapolis, MN 55441		
Model: BCVD0401	Sales Office: HTS Texas			www.DaikinApplied.com	Software Version: 07.40	
Sales Engineer:	Jan. 16, 2026	Ver/Rev:	Sheet 1 of 1	Scale: NTS	Tolerance: +/-0.25"	Dwg Units: in [mm]

No change to this drawing may be made unless approved in writing by Daikin Applied. Purchaser must determine that the equipment is fit and sufficient for the job specifications.

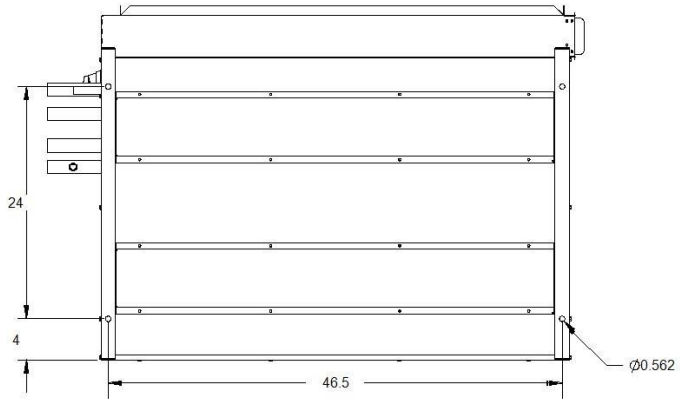

SECTION A-A

CABINET MOUNTING HOLE LOCATIONS

	Unit Tag: AHU-13 - Eiland (LH)			Sales Office: HTS Texas			DAIKIN
Product: PreciseLine® Air Handler	Project Name: Klein ISD Eiland ES AHU			Sales Engineer:			13600 Industrial Park Blvd. Minneapolis, MN 55441
Model: BCVD0401	Jan. 16, 2026	Ver/Rev:	Sheet: 1 of 1	Scale: NTS	Tolerance: +/- 0.25"	Dwg Units: in [mm]	www.DaikinApplied.com Software Version: 07.40

No change to this drawing may be made unless approved in writing by Daikin Applied. Purchaser must determine that the equipment is fit and sufficient for the job specifications.

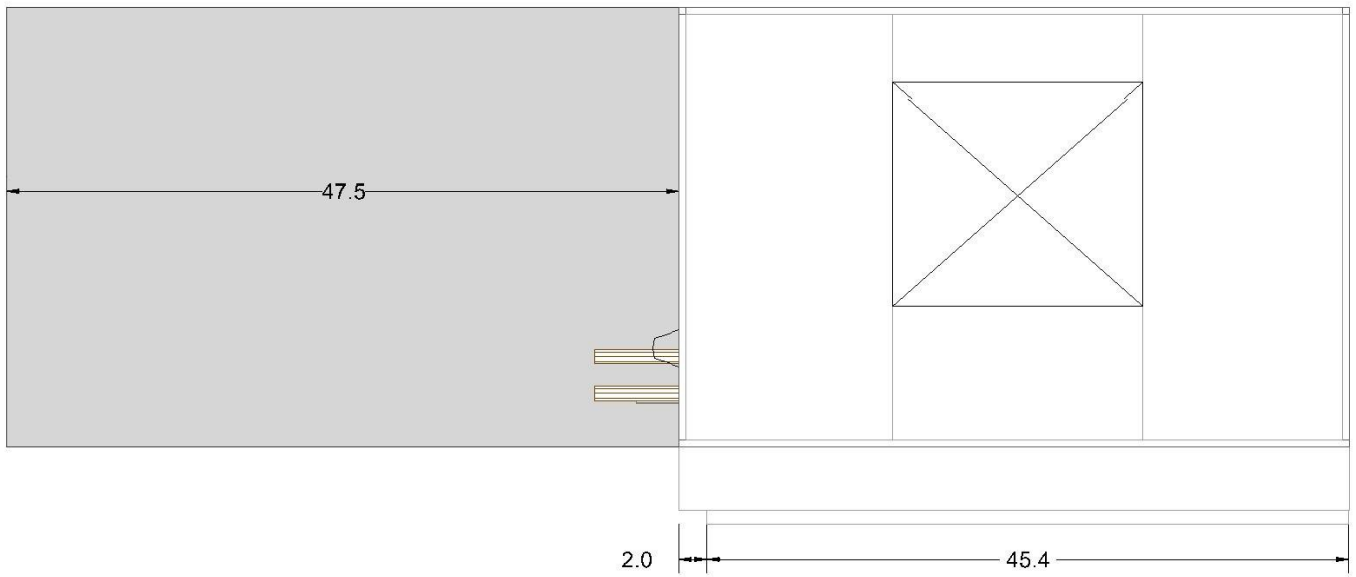

	Unit Tag: AHU-13 - Eiland (LH)			Sales Office: HTS Texas			DAIKIN
Product: PreciseLine® Air Handler	Project Name: Klein ISD Eiland ES AHU			Sales Engineer:			13600 Industrial Park Blvd. Minneapolis, MN 55441
Model: BCVD0401	Jan. 16, 2026	Ver/Rev:	Sheet: 1 of 1	Scale: NTS	Tolerance: +/- 0.25"	Dwg Units: in [mm]	www.DaikinApplied.com Software Version: 07.40

No change to this drawing may be made unless approved in writing by Daikin Applied. Purchaser must determine that the equipment is fit and sufficient for the job specifications.

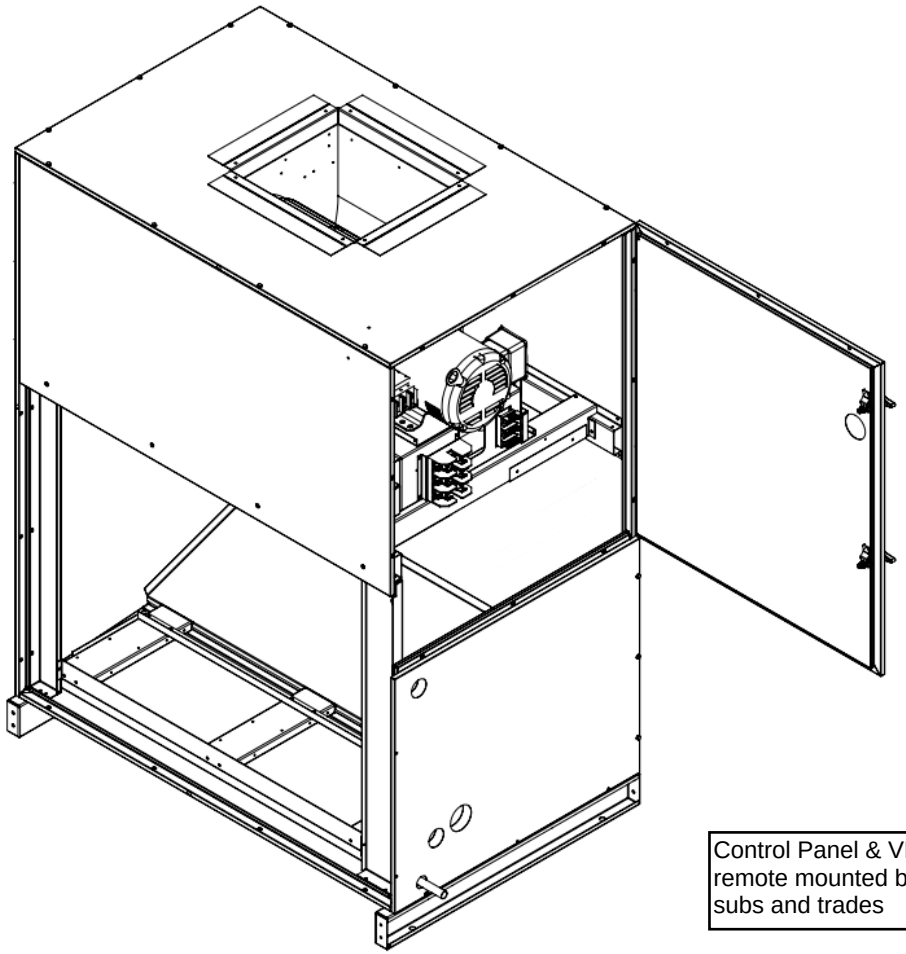

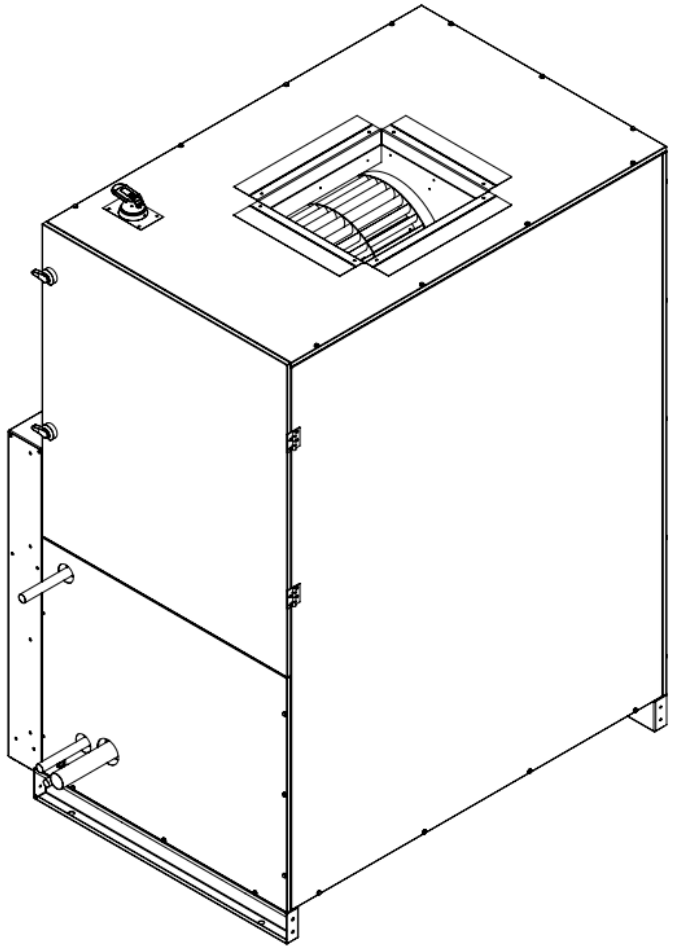

Control Panel & VFD to be remote mounted by Installing subs and trades

	Unit Tag: AHU-13 - Eiland (LH)			Sales Office: HTS Texas			DAIKIN
Product: PreciseLine® Air Handler	Project Name: Klein ISD Eiland ES AHU			Sales Engineer:			13600 Industrial Park Blvd. Minneapolis, MN 55441
Model: BCVD0401	Jan. 16, 2026	Ver/Rev:	Sheet: 1 of 1	Scale: NTS	Tolerance: +/- 0.25"	Dwg Units: in [mm]	www.DaikinApplied.com Software Version: 07.40

No change to this drawing may be made unless approved in writing by Daikin Applied. Purchaser must determine that the equipment is fit and sufficient for the job specifications.

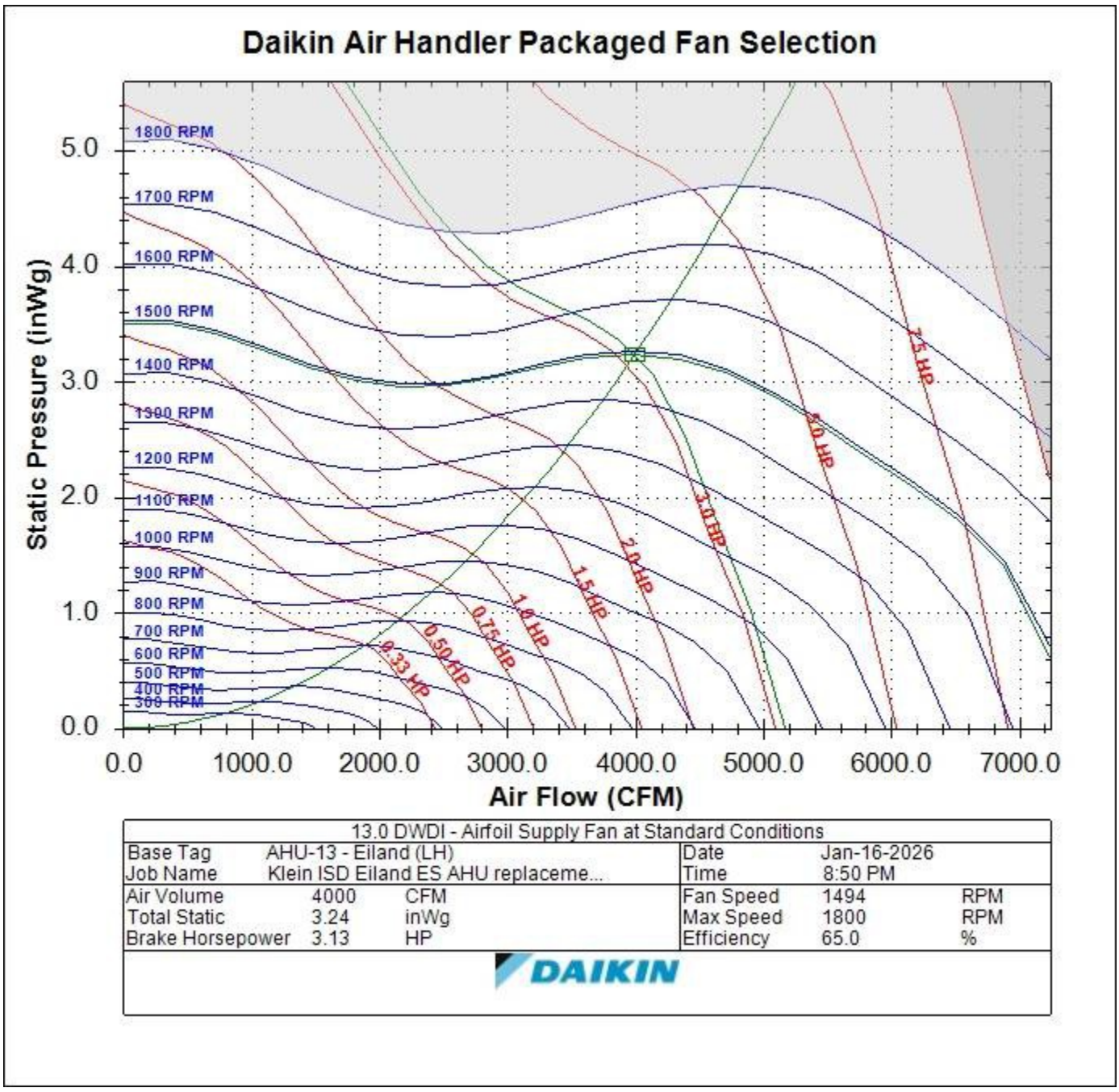
Daikin Air Handler Packaged Fan Selection
Static Pressure (inWg)
Air Flow (CFM)
0.0
1.0
2.0
3.0
4.0
5.0
0.0
1000.0
2000.0
3000.0
4000.0
5000.0
6000.0
7000.0
1800 RPM
1700 RPM
1600 RPM
1500 RPM
1400 RPM
1300 RPM
1200 RPM
1100 RPM
1000 RPM
900 RPM
800 RPM
700 RPM
600 RPM
500 RPM
400 RPM
300 RPM
0.33 HP
0.50 HP
0.75 HP
1.0 HP
1.5 HP
2.0 HP
3.0 HP
5.0 HP
7.5 HP
13.0 DWDI - Airfoil Supply Fan at Standard Conditions
Base Tag AHU-13 - Eiland (LH)
Job Name Klein ISD Eiland ES AHU replaceme...
Date Jan-16-2026
Time 8:50 PM
Air Volume 4000 CFM
Total Static 3.24 inWg
Brake Horsepower 3.13 HP
Fan Speed 1494 RPM
Max Speed 1800 RPM
Efficiency 65.0 %
DAIKIN

Job Information	*Technical Data Sheet*
Job Name	Klein ISD Eiland ES AHU replacements
Date	1/16/2026
Submitted By	Matt McPherson
Software Version	07.40
Unit Tag	AHU-14,18,24 - Eiland (RH)
FPA#	PL-250152-1



Unit Overview

Model Number	Voltage V/Hz/Phase	Airflow CFM	External Static Pressure inH_2O	Design Cooling Capacity Btu/hr
BCVD0401	460/60/3	3150	1.50	131843

Unit

Model Number:	BCVD0401
Unit Arrangement:	Vertical
Altitude:	0 ft

Physical

Dimensions and Weight (wet)

Length	Height	Width	Weight
31.0 in	65.5 in	47.5 in	445 lb

Construction

Insulation and Liners:	1" Injected Foam, R-6, Galvanized Steel Liner

Electrical

Field Connection	Unit FLA	Unit MCA	Unit MROPD	SCCR
Disconnect Switch	6.2 A	7.7 A	15 A	5 kA

Filter

Filter Access	Filter Depth	MERV Rating	(Quantity) Height x Width x Depth
Side	2 in	MERV 13	(2) 12 x 24, (2) 20 x 24

Primary Hydronic Coil

Physical

Fins per Inch	Rows	Casing Material	Face Area ft^2	Face Velocity ft/min
12	6	Stainless Steel	8.0	392.8

Connection

Size	Type	Location
1.625	SWT	Right Hand

Drain Pan

Material	Connection
Stainless Steel	0.75 in

Performance

Capacity		Air Temperature			
		Entering		Leaving	
Total Btu/hr	Sensible Btu/hr	Dry Bulb °F	Wet Bulb °F	Dry Bulb °F	Wet Bulb °F
131843	84735	78.0	67.0	53.4	53.4

Fluid

Type	Entering Temperature °F	Leaving Temperature °F	Flow Rate gpm	Pressure Drop ft H_2O
Water	45.0	58.2	20.0	5.83

Supply Fan

Performance

Airflow	Total Static Pressure	Fan Speed	Controller Input Signal	Brake Horsepower	Total Input Power	Fan Energy Index	Altitude
3150	2.80 inH_2O	1410 rpm	7.8 VDC	2.18 HP	2.43 HP	1.317	0 ft

Motor

Type	(Qty) Horsepower	Motor Control	(Qty) FLA
FC Direct Drive NEMA Premium Efficiency Motor	(1) 5.0 HP	0-10V Modulating	(1) 6.2 A

Unit Discharge Conditions

AirTemperature

Motor Heat Btu/hr	Unit Leaving Dry Bulb °F	Unit Leaving Wet Bulb °F	Unit Leaving Dewpoint °F
6813	55.4	54.0	53.0

Supply Fan Total Pressure Drop Calculation

External Static Pressure:	1.50 inH_2O
Primary Filter:	0.28 inH_2O
Dirty/Additional Filter:	0.50 inH_2O
Cooling Coil:	0.52 inH_2O
Total Static Pressure (Supply):	2.80 inH_2O

Sound Power

	Sound Power (db)							
Frequency	**63 Hz**	**125 Hz**	**250 Hz**	**500 Hz**	**1 kHz**	**2 kHz**	**4 kHz**	**8 kHz**
Inlet	83	81	77	73	73	69	67	55
Discharge	91	87	84	81	79	76	74	65
Radiated	71	68	63	56	59	59	43	31

Options

Controls	
Overflow Switch:	Factory mounted Overflow Switch

Warranty

Parts:	1 year extended parts only

AHRI Certification

All equipment is rated and certified in accordance with AHRI 430.

Notes

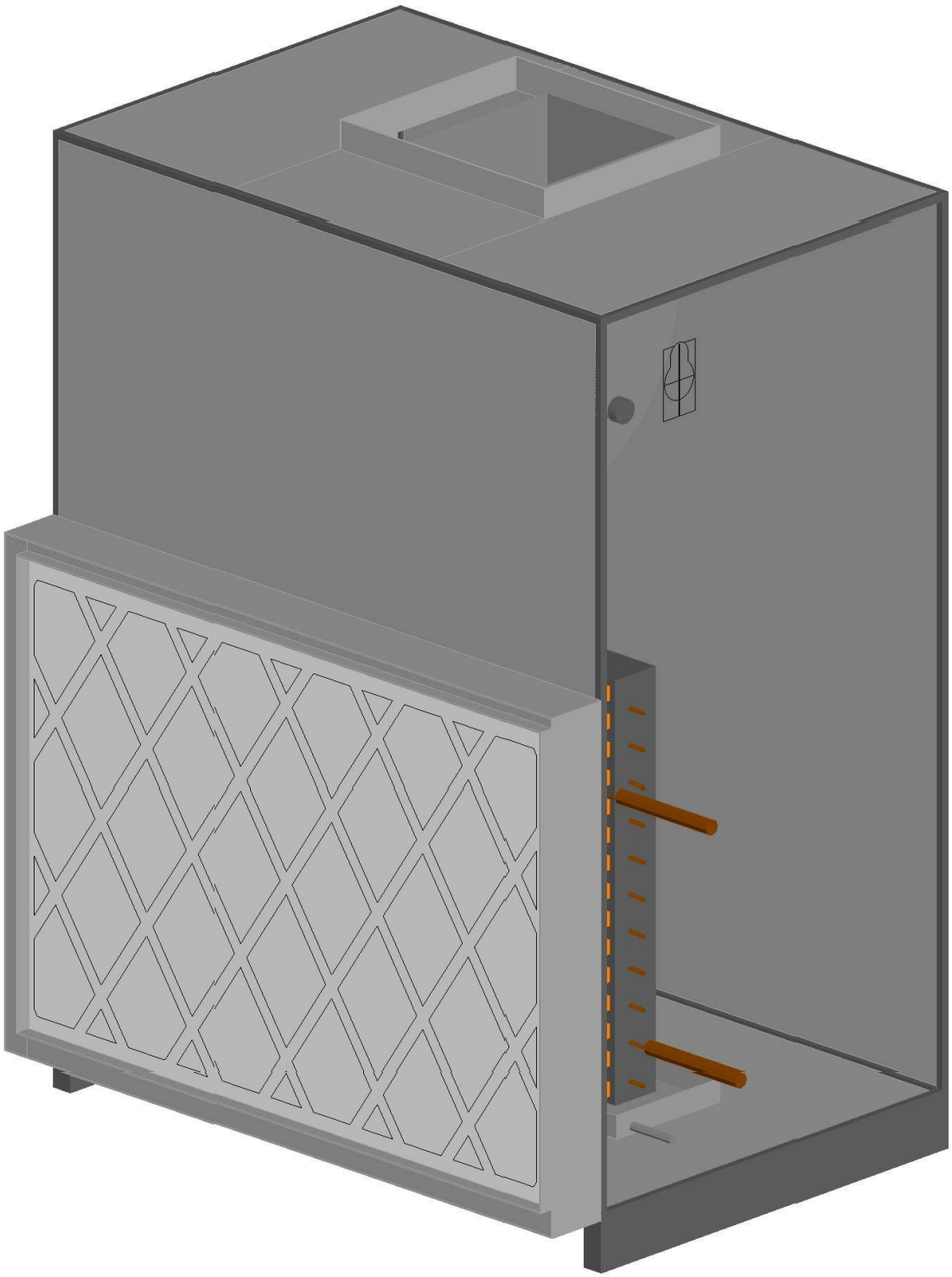

	Unit Tag: AHU-14,18,24 - Eiland (RH)			DAIKIN		
Product: PreciseLine® Air Handler	Project Name: Klein ISD Eiland ES AHU			13600 Industrial Park Blvd. Minneapolis, MN 55441		
Model: BCVD0401	Sales Office: HTS Texas			www.DaikinApplied.com Software Version: 07.40		
Sales Engineer:	Jan. 16, 2026	Ver/Rev:	Sheet 1 of 1	Scale: NTS	Tolerance: +/-0.25"	Dwg Units: in [mm]

No change to this drawing may be made unless approved in writing by Daikin Applied. Purchaser must determine that the equipment is fit and sufficient for the job specifications.

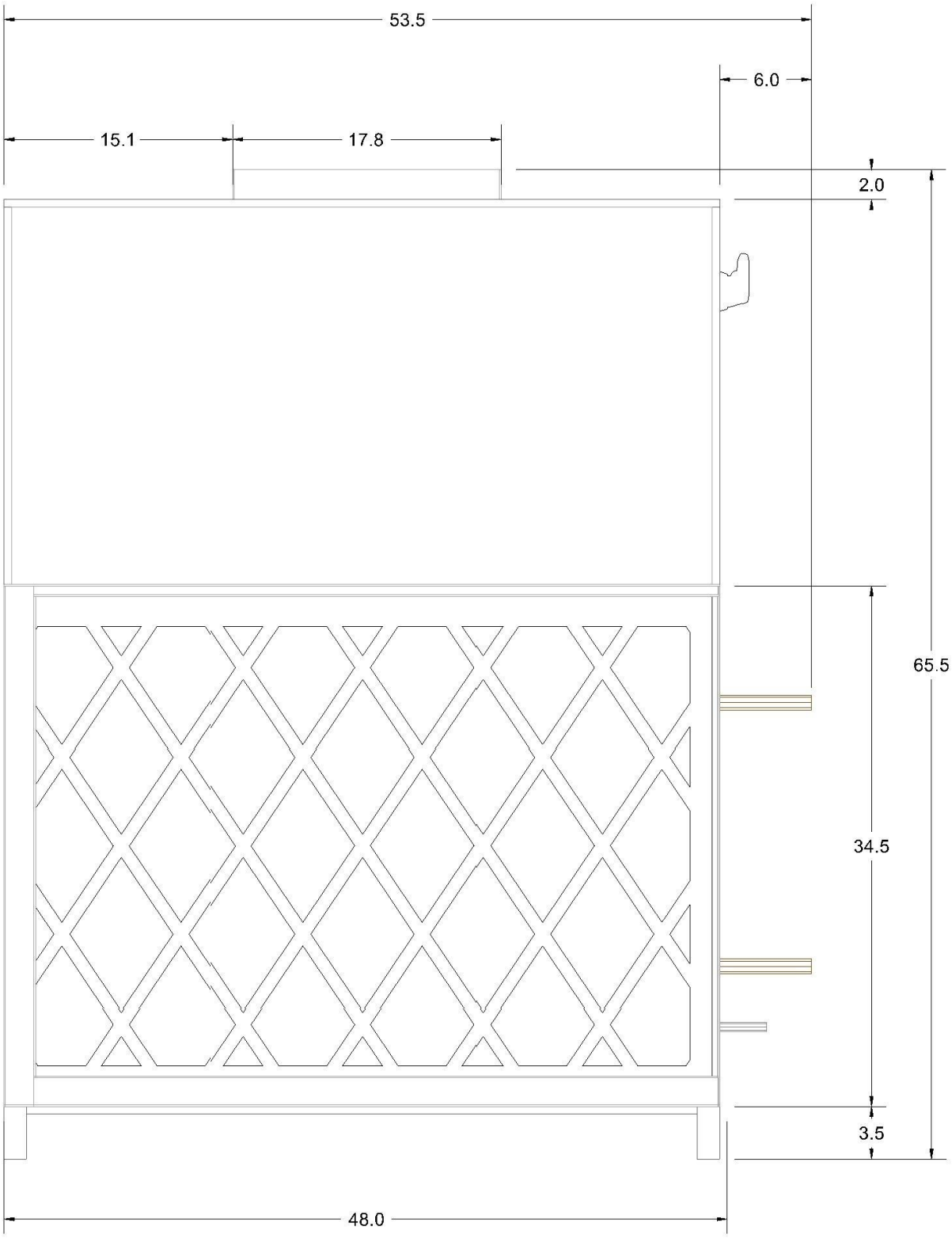

	Unit Tag: AHU-14,18,24 - Eiland (RH)			DAIKIN		
Product: PreciseLine® Air Handler	Project Name: Klein ISD Eiland ES AHU			13600 Industrial Park Blvd. Minneapolis, MN 55441		
Model: BCVD0401	Sales Office: HTS Texas			www.DaikinApplied.com	Software Version: 07.40	
Sales Engineer:	Jan. 16, 2026	Ver/Rev:	Sheet 1 of 1	Scale: NTS	Tolerance: +/-0.25"	Dwg Units: in [mm]

No change to this drawing may be made unless approved in writing by Daikin Applied. Purchaser must determine that the equipment is fit and sufficient for the job specifications.

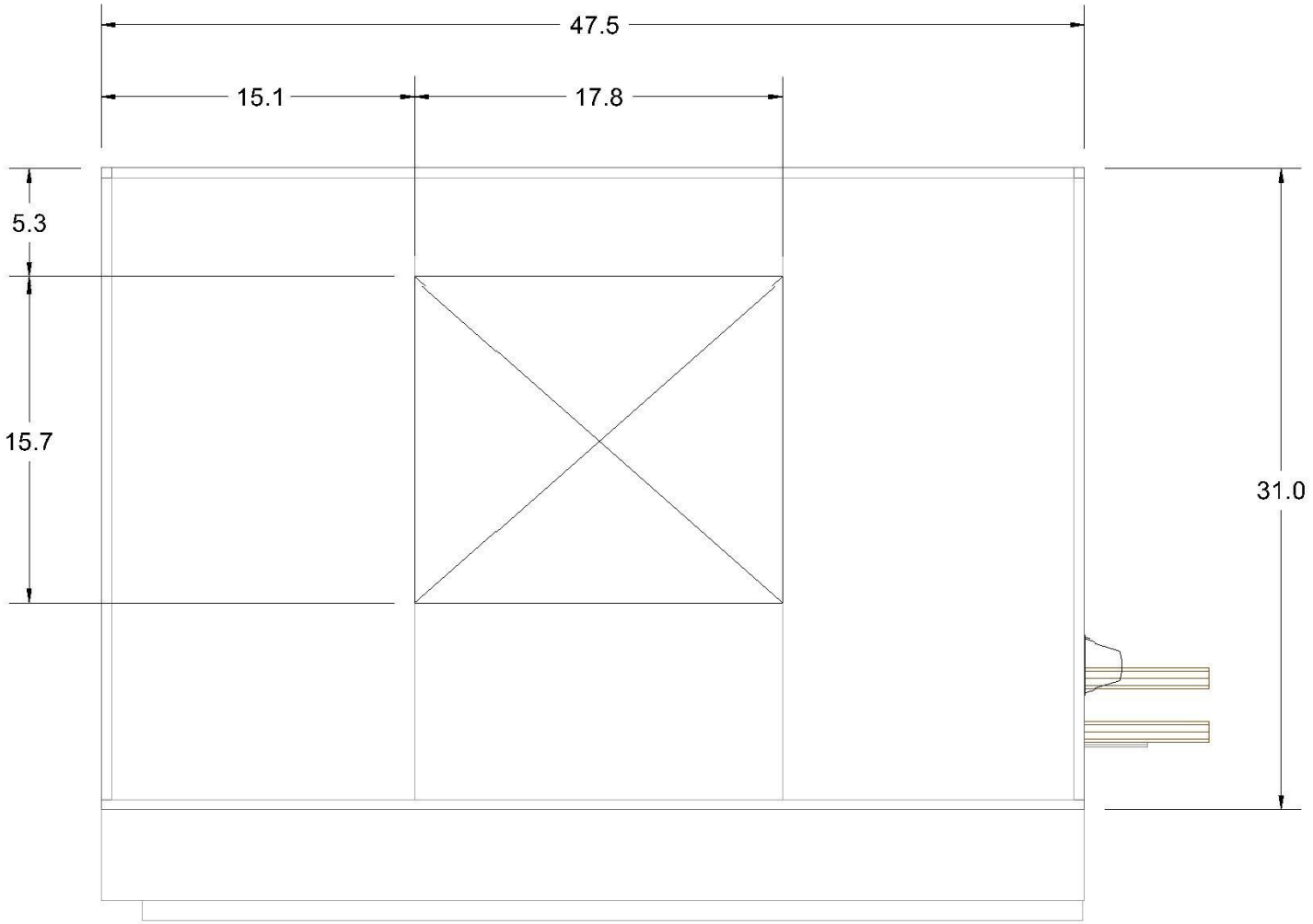

	Unit Tag: AHU-14,18,24 - Eiland (RH)			Sales Office: HTS Texas			DAIKIN
Product: PreciseLine® Air Handler	Project Name: Klein ISD Eiland ES AHU			Sales Engineer:			13600 Industrial Park Blvd. Minneapolis, MN 55441
Model: BCVD0401	Jan. 16, 2026	Ver/Rev:	Sheet: 1 of 1	Scale: NTS	Tolerance: +/- 0.25"	Dwg Units: in [mm]	www.DaikinApplied.com Software Version: 07.40

No change to this drawing may be made unless approved in writing by Daikin Applied. Purchaser must determine that the equipment is fit and sufficient for the job specifications.

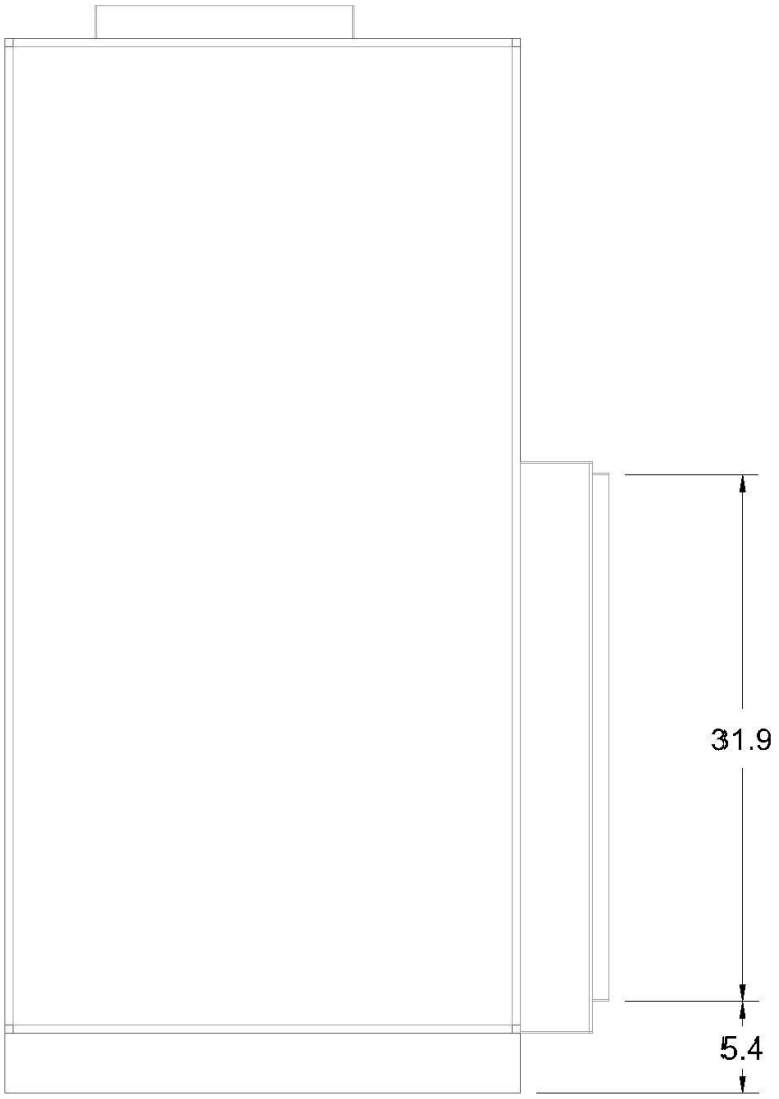

	Unit Tag: AHU-14,18,24 - Eiland (RH)			DAIKIN		
Product: PreciseLine® Air Handler	Project Name: Klein ISD Eiland ES AHU			13600 Industrial Park Blvd. Minneapolis, MN 55441		
Model: BCVD0401	Sales Office: HTS Texas			www.DaikinApplied.com Software Version: 07.40		
Sales Engineer:	Jan. 16, 2026	Ver/Rev:	Sheet 1 of 1	Scale: NTS	Tolerance: +/-0.25"	Dwg Units: in [mm]

No change to this drawing may be made unless approved in writing by Daikin Applied. Purchaser must determine that the equipment is fit and sufficient for the job specifications.

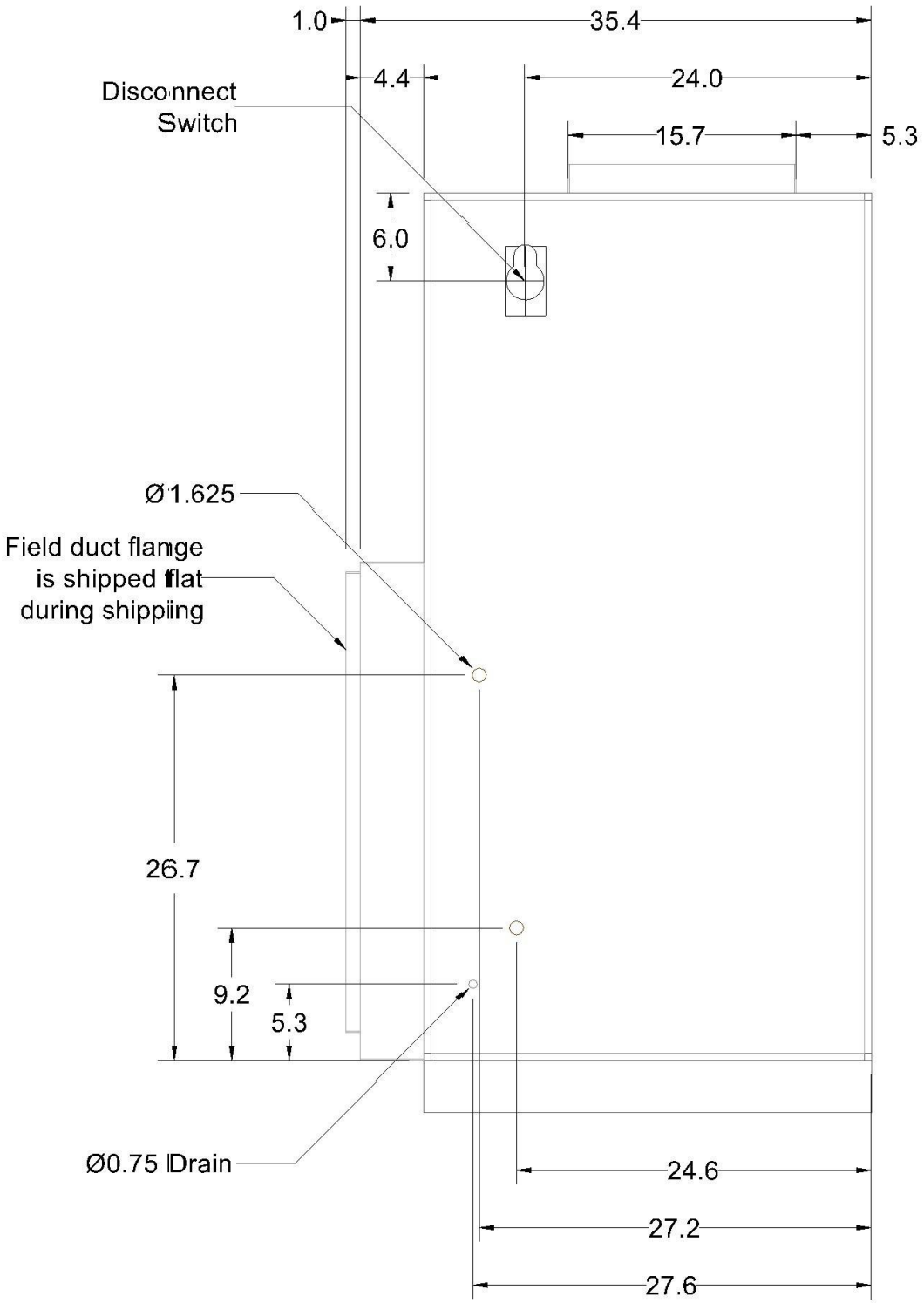

	Unit Tag: AHU-14,18,24 - Eiland (RH)			DAIKIN		
Product: PreciseLine® Air Handler	Project Name: Klein ISD Eiland ES AHU			13600 Industrial Park Blvd. Minneapolis, MN 55441		
Model: BCVD0401	Sales Office: HTS Texas			www.DaikinApplied.com	Software Version: 07.40	
Sales Engineer:	Jan. 16, 2026	Ver/Rev:	Sheet 1 of 1	Scale: NTS	Tolerance: +/-0.25"	Dwg Units: in [mm]

No change to this drawing may be made unless approved in writing by Daikin Applied. Purchaser must determine that the equipment is fit and sufficient for the job specifications.

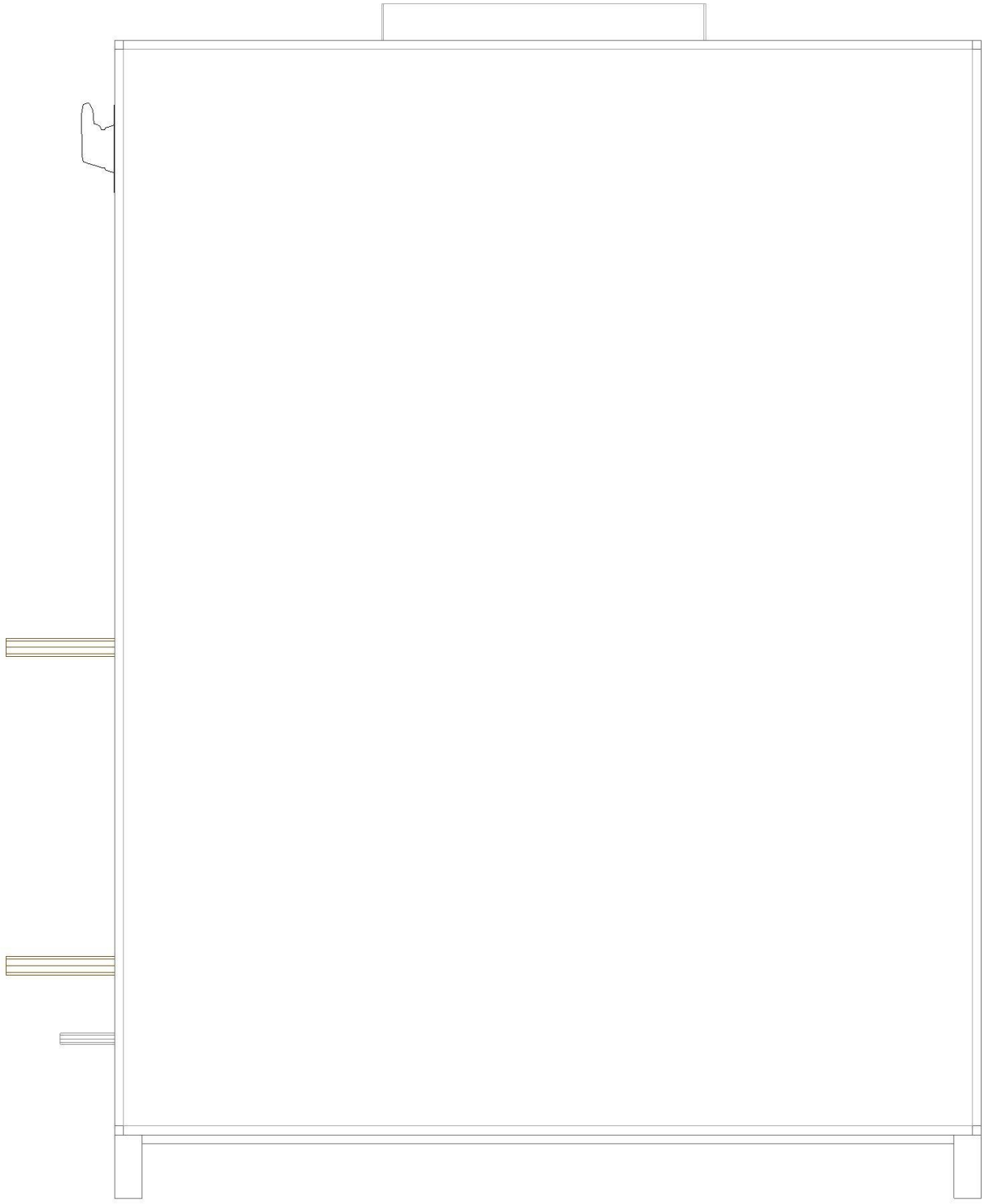

	Unit Tag: AHU-14,18,24 - Eiland (RH)			DAIKIN		
Product: PreciseLine® Air Handler	Project Name: Klein ISD Eiland ES AHU			13600 Industrial Park Blvd. Minneapolis, MN 55441		
Model: BCVD0401	Sales Office: HTS Texas			www.DaikinApplied.com Software Version: 07.40		
Sales Engineer:	Jan. 16, 2026	Ver/Rev:	Sheet 1 of 1	Scale: NTS	Tolerance: +/-0.25"	Dwg Units: in [mm]

No change to this drawing may be made unless approved in writing by Daikin Applied. Purchaser must determine that the equipment is fit and sufficient for the job specifications.

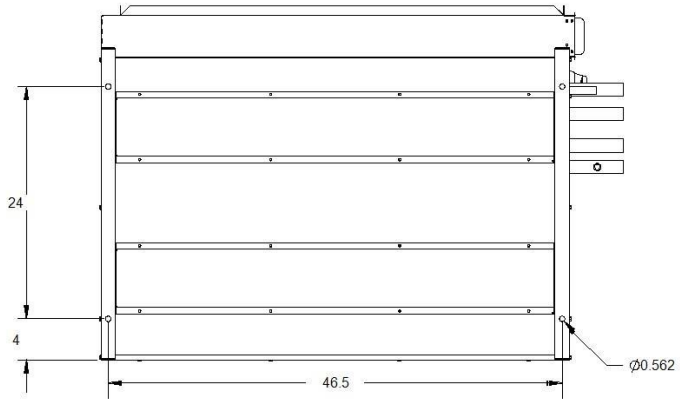

SECTION A-A

CABINET MOUNTING HOLE LOCATIONS

	Unit Tag: AHU-14,18,24 - Eiland (RH)			Sales Office: HTS Texas			DAIKIN
Product: PreciseLine® Air Handler	Project Name: Klein ISD Eiland ES AHU			Sales Engineer:			13600 Industrial Park Blvd. Minneapolis, MN 55441
Model: BCVD0401	Jan. 16, 2026	Ver/Rev:	Sheet: 1 of 1	Scale: NTS	Tolerance: +/- 0.25"	Dwg Units: in [mm]	www.DaikinApplied.com Software Version: 07.40

No change to this drawing may be made unless approved in writing by Daikin Applied. Purchaser must determine that the equipment is fit and sufficient for the job specifications.

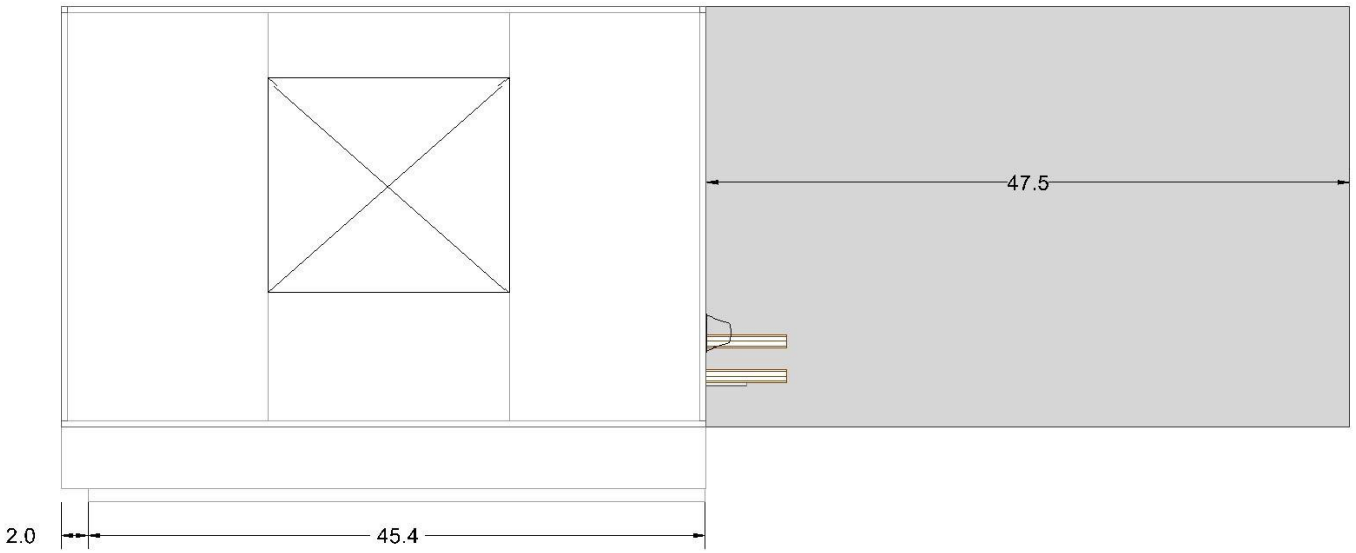

	Unit Tag: AHU-14,18,24 - Eiland (RH)			Sales Office: HTS Texas			DAIKIN
Product: PreciseLine® Air Handler	Project Name: Klein ISD Eiland ES AHU			Sales Engineer:			13600 Industrial Park Blvd. Minneapolis, MN 55441
Model: BCVD0401	Jan. 16, 2026	Ver/Rev:	Sheet: 1 of 1	Scale: NTS	Tolerance: +/- 0.25"	Dwg Units: in [mm]	www.DaikinApplied.com Software Version: 07.40

No change to this drawing may be made unless approved in writing by Daikin Applied. Purchaser must determine that the equipment is fit and sufficient for the job specifications.

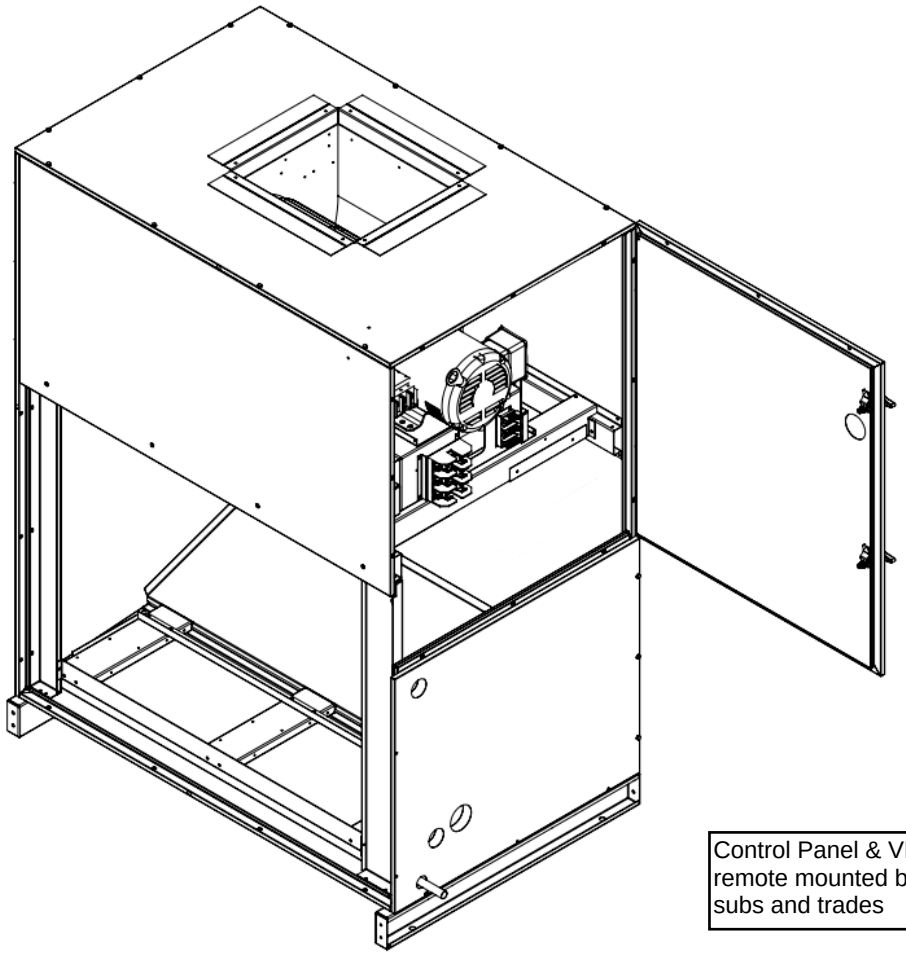

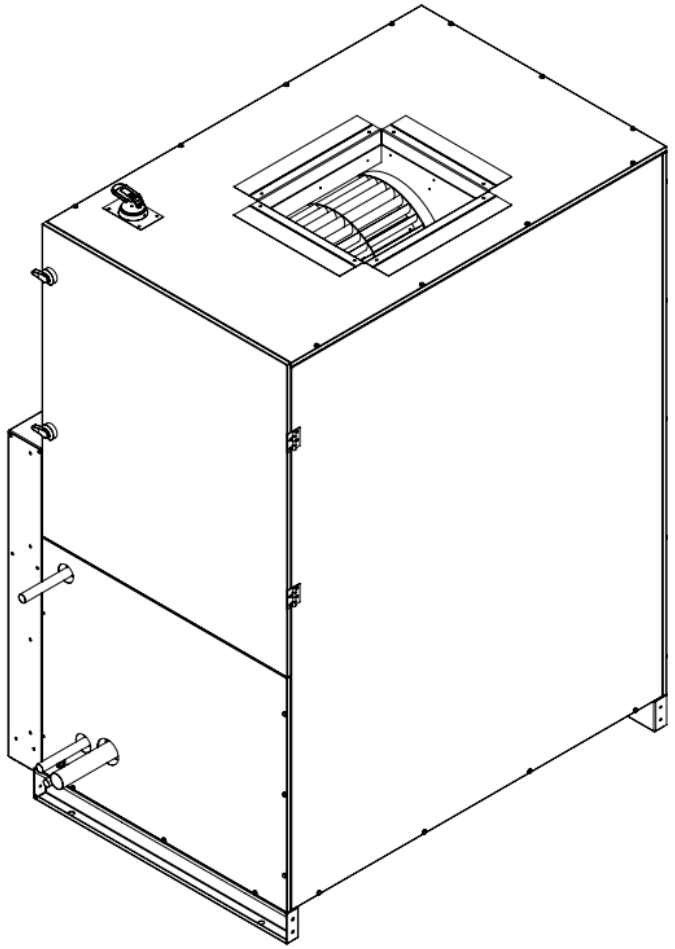

Control Panel & VFD to be remote mounted by Installing subs and trades

	Unit Tag: AHU-14,18,24 - Eiland (RH)			Sales Office: HTS Texas			DAIKIN
Product: PreciseLine® Air Handler	Project Name: Klein ISD Eiland ES AHU			Sales Engineer:			13600 Industrial Park Blvd. Minneapolis, MN 55441
Model: BCVD0401	Jan. 16, 2026	Ver/Rev:	Sheet: 1 of 1	Scale: NTS	Tolerance: +/- 0.25"	Dwg Units: in [mm]	www.DaikinApplied.com Software Version: 07.40

No change to this drawing may be made unless approved in writing by Daikin Applied. Purchaser must determine that the equipment is fit and sufficient for the job specifications.

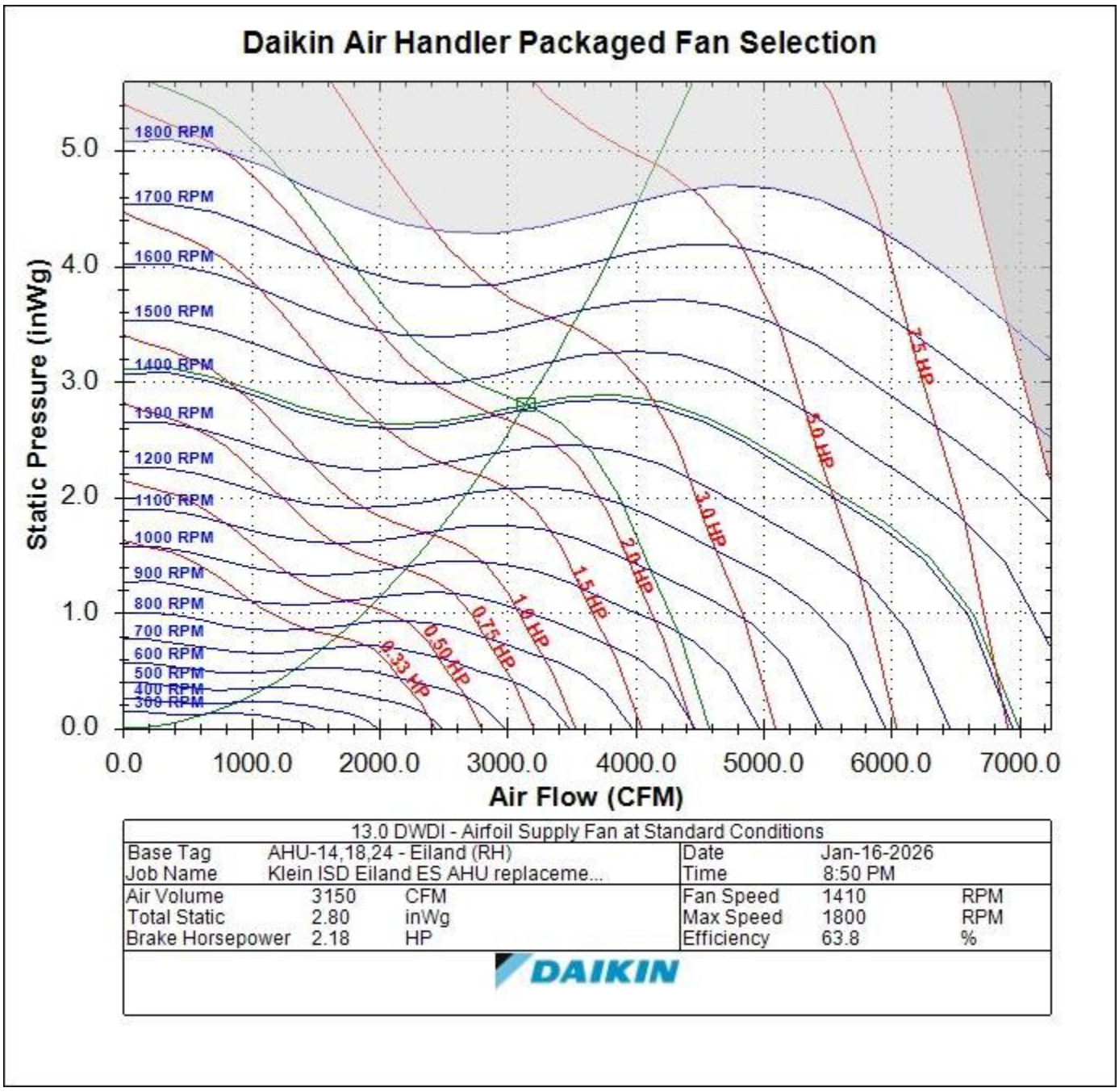
Daikin Air Handler Packaged Fan Selection
Static Pressure (inWg)
Air Flow (CFM)
0.0
1.0
2.0
3.0
4.0
5.0
0.0
1000.0
2000.0
3000.0
4000.0
5000.0
6000.0
7000.0
1800 RPM
1700 RPM
1600 RPM
1500 RPM
1400 RPM
1300 RPM
1200 RPM
1100 RPM
1000 RPM
900 RPM
800 RPM
700 RPM
600 RPM
500 RPM
400 RPM
300 RPM
0.33 HP
0.50 HP
0.75 HP
1.0 HP
1.5 HP
2.0 HP
3.0 HP
5.0 HP
7.5 HP
13.0 DWDI - Airfoil Supply Fan at Standard Conditions
Base Tag AHU-14,18,24 - Eiland (RH)
Job Name Klein ISD Eiland ES AHU replaceme...
Date Jan-16-2026
Time 8:50 PM
Air Volume 3150 CFM
Total Static 2.80 inWg
Brake Horsepower 2.18 HP
Fan Speed 1410 RPM
Max Speed 1800 RPM
Efficiency 63.8 %
DAIKIN

Job Information	*Technical Data Sheet*
Job Name	Klein ISD Eiland ES AHU replacements
Date	1/16/2026
Submitted By	Matt McPherson
Software Version	07.40
Unit Tag	AHU-15,19,25 - Eiland (LH)



Unit Overview

Model Number	Voltage V/Hz/Phase	Airflow CFM	External Static Pressure inH_2O	Design Cooling Capacity Btu/hr
BCVD0401	460/60/3	3150	1.50	131843

Unit

Model Number:	BCVD0401
Unit Arrangement:	Vertical
Altitude:	0 ft

Physical

Dimensions and Weight (wet)

Length	Height	Width	Weight
31.0 in	65.5 in	47.5 in	445 lb

Construction

Insulation and Liners:	1" Injected Foam, R-6, Galvanized Steel Liner

Electrical

Field Connection	Unit FLA	Unit MCA	Unit MROPD	SCCR
Disconnect Switch	6.2 A	7.7 A	15 A	5 kA

Filter

Filter Access	Filter Depth	MERV Rating	(Quantity) Height x Width x Depth
Side	2 in	MERV 13	(2) 12 x 24, (2) 20 x 24

Primary Hydronic Coil

Physical

Fins per Inch	Rows	Casing Material	Face Area ft^2	Face Velocity ft/min
12	6	Stainless Steel	8.0	392.8

Connection

Size	Type	Location
1.625	SWT	Left Hand

Drain Pan

Material	Connection
Stainless Steel	0.75 in

Performance

Capacity		Air Temperature			
		Entering		Leaving	
Total Btu/hr	Sensible Btu/hr	Dry Bulb °F	Wet Bulb °F	Dry Bulb °F	Wet Bulb °F
131843	84735	78.0	67.0	53.4	53.4

Fluid

Type	Entering Temperature °F	Leaving Temperature °F	Flow Rate gpm	Pressure Drop ft H_2O
Water	45.0	58.2	20.0	5.83

Supply Fan

Performance

Airflow	Total Static Pressure	Fan Speed	Controller Input Signal	Brake Horsepower	Total Input Power	Fan Energy Index	Altitude
3150	2.80 inH_2O	1410 rpm	7.8 VDC	2.18 HP	2.43 HP	1.317	0 ft

Motor

Type	(Qty) Horsepower	Motor Control	(Qty) FLA
FC Direct Drive NEMA Premium Efficiency Motor	(1) 5.0 HP	0-10V Modulating	(1) 6.2 A

Unit Discharge Conditions

AirTemperature

Motor Heat Btu/hr	Unit Leaving Dry Bulb °F	Unit Leaving Wet Bulb °F	Unit Leaving Dewpoint °F
6813	55.4	54.0	53.0

Supply Fan Total Pressure Drop Calculation

External Static Pressure:	1.50 inH_2O
Primary Filter:	0.28 inH_2O
Dirty/Additional Filter:	0.50 inH_2O
Cooling Coil:	0.52 inH_2O
Total Static Pressure (Supply):	2.80 inH_2O

Sound Power

	Sound Power (db)							
Frequency	**63 Hz**	**125 Hz**	**250 Hz**	**500 Hz**	**1 kHz**	**2 kHz**	**4 kHz**	**8 kHz**
Inlet	83	81	77	73	73	69	67	55
Discharge	91	87	84	81	79	76	74	65
Radiated	71	68	63	56	59	59	43	31

Options

Controls	
Overflow Switch:	Factory mounted Overflow Switch

Warranty

Parts:	1 year extended parts only

AHRI Certification

All equipment is rated and certified in accordance with AHRI 430.

Notes

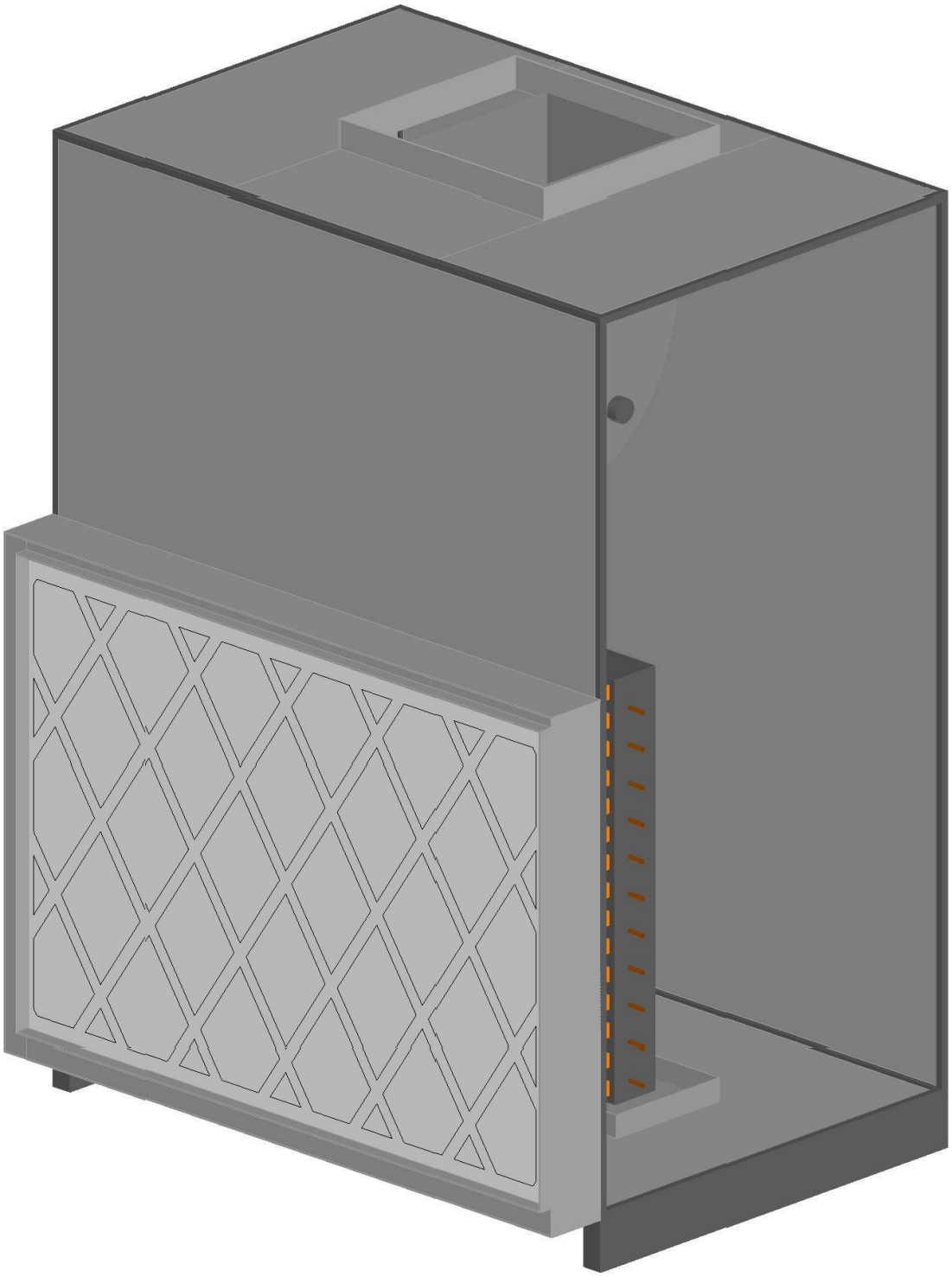

	Unit Tag: AHU-15,19,25 - Eiland (LH)			DAIKIN		
Product: PreciseLine® Air Handler	Project Name: Klein ISD Eiland ES AHU			13600 Industrial Park Blvd. Minneapolis, MN 55441		
Model: BCVD0401	Sales Office: HTS Texas			www.DaikinApplied.com Software Version: 07.40		
Sales Engineer:	Jan. 16, 2026	Ver/Rev:	Sheet 1 of 1	Scale: NTS	Tolerance: +/-0.25"	Dwg Units: in [mm]

No change to this drawing may be made unless approved in writing by Daikin Applied. Purchaser must determine that the equipment is fit and sufficient for the job specifications.

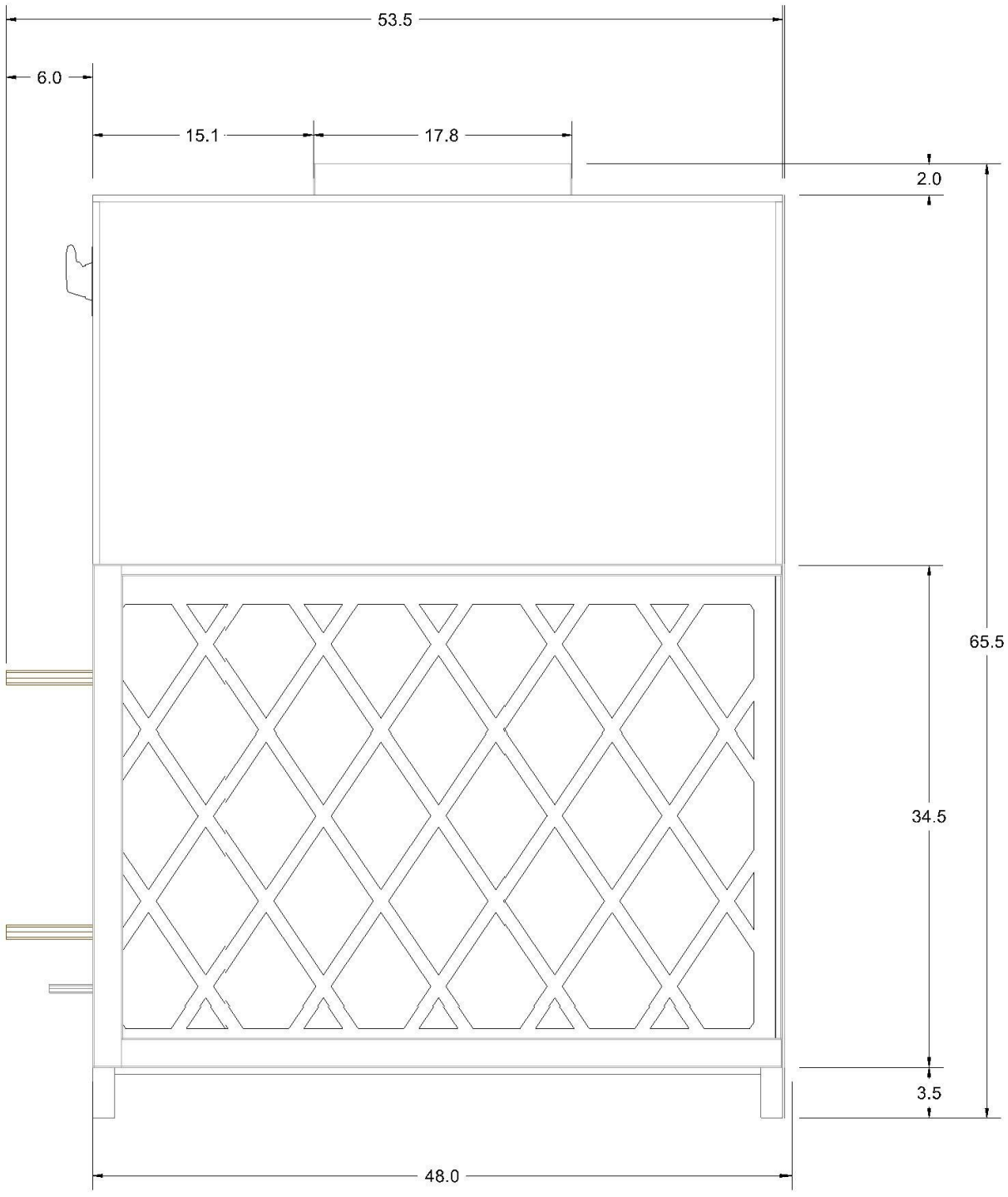

	Unit Tag: AHU-15,19,25 - Eiland (LH)			DAIKIN		
Product: PreciseLine® Air Handler	Project Name: Klein ISD Eiland ES AHU			13600 Industrial Park Blvd. Minneapolis, MN 55441		
Model: BCVD0401	Sales Office: HTS Texas			www.DaikinApplied.com	Software Version: 07.40	
Sales Engineer:	Jan. 16, 2026	Ver/Rev:	Sheet 1 of 1	Scale: NTS	Tolerance: +/-0.25"	Dwg Units: in [mm]

No change to this drawing may be made unless approved in writing by Daikin Applied. Purchaser must determine that the equipment is fit and sufficient for the job specifications.

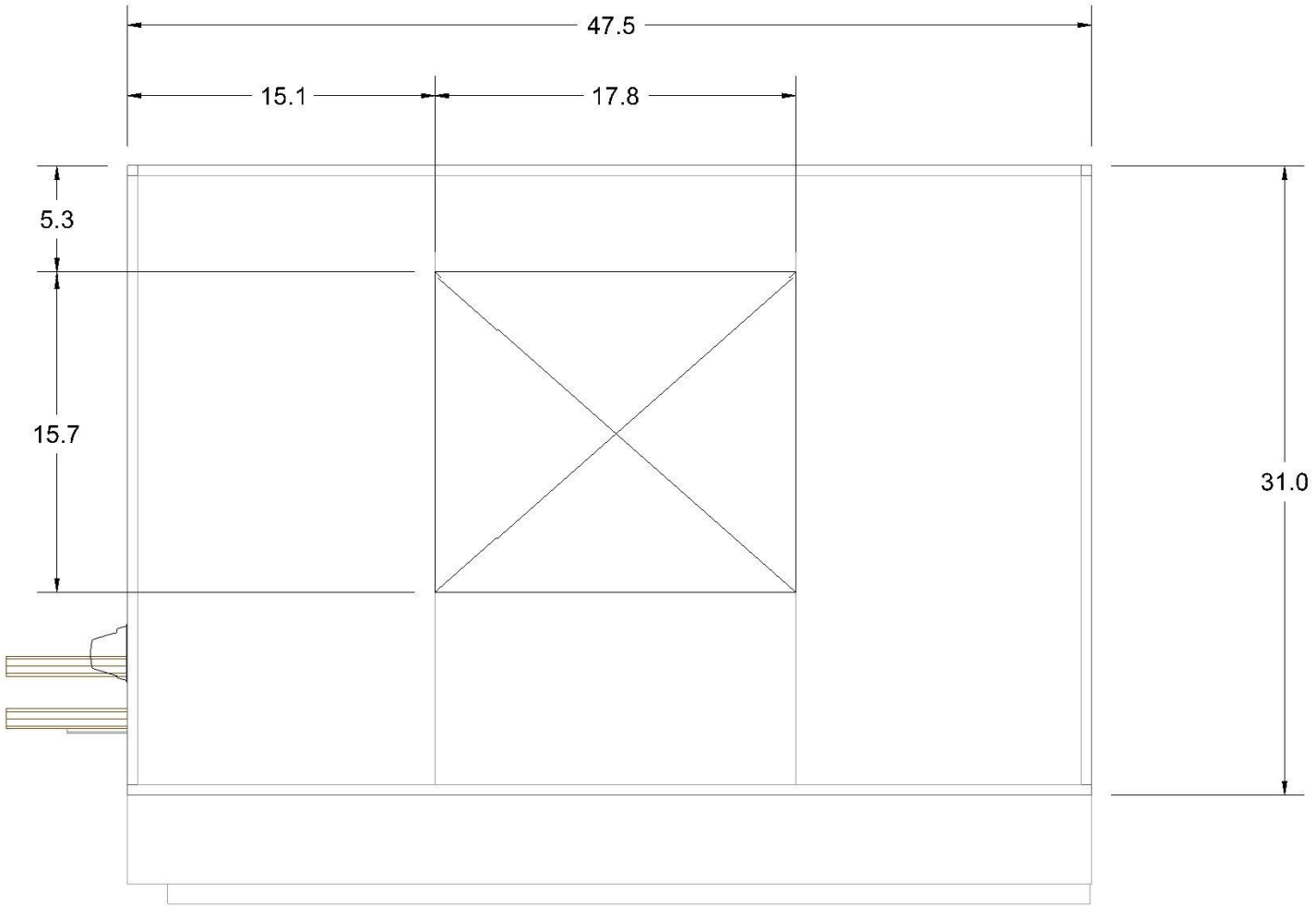

	Unit Tag: AHU-15,19,25 - Eiland (LH)			Sales Office: HTS Texas			DAIKIN
Product: PreciseLine® Air Handler	Project Name: Klein ISD Eiland ES AHU			Sales Engineer:			13600 Industrial Park Blvd. Minneapolis, MN 55441
Model: BCVD0401	Jan. 16, 2026	Ver/Rev:	Sheet: 1 of 1	Scale: NTS	Tolerance: +/- 0.25"	Dwg Units: in [mm]	www.DaikinApplied.com Software Version: 07.40

No change to this drawing may be made unless approved in writing by Daikin Applied. Purchaser must determine that the equipment is fit and sufficient for the job specifications.

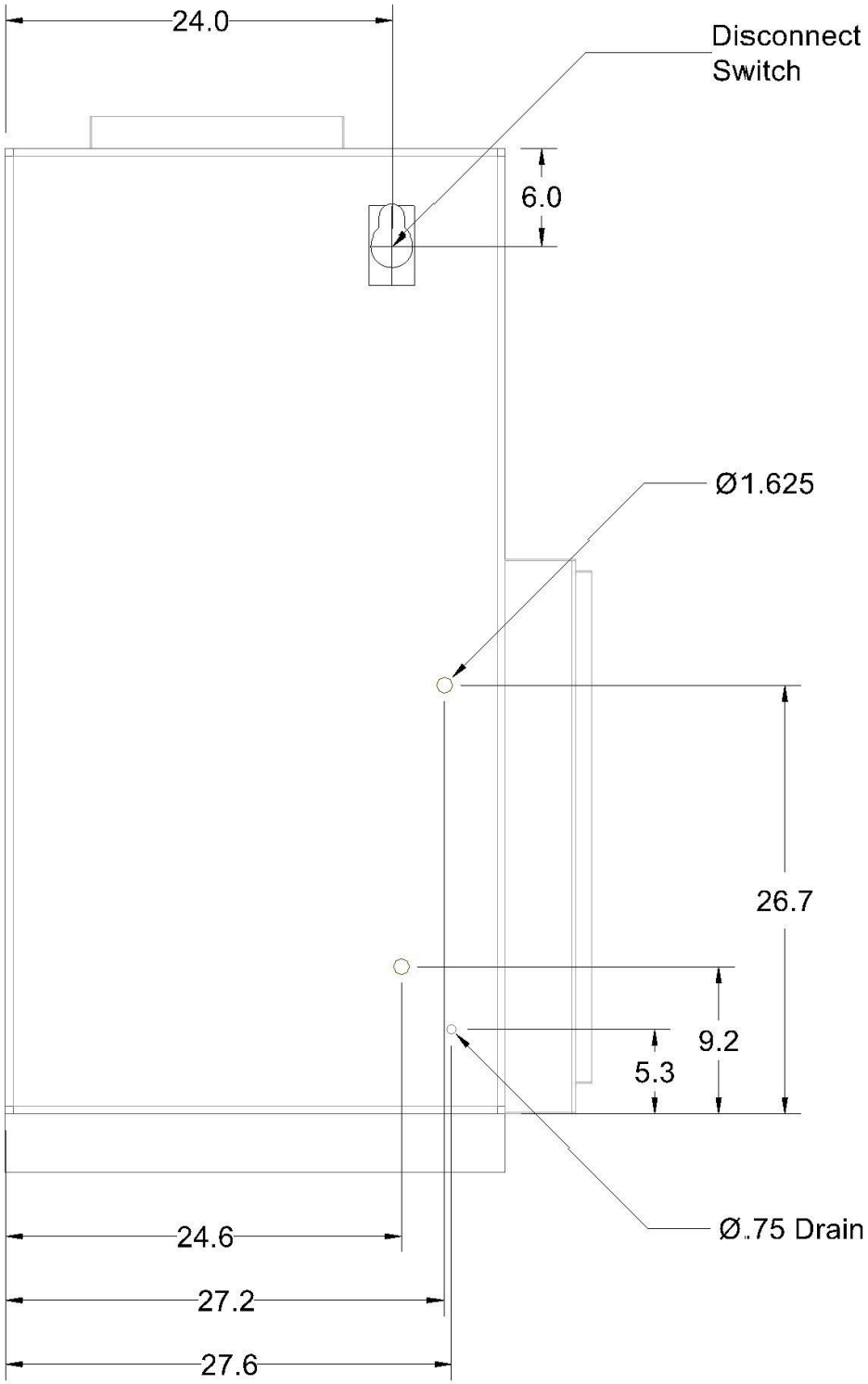

	Unit Tag: AHU-15,19,25 - Eiland (LH)			DAIKIN		
Product: PreciseLine® Air Handler	Project Name: Klein ISD Eiland ES AHU			13600 Industrial Park Blvd. Minneapolis, MN 55441		
Model: BCVD0401	Sales Office: HTS Texas			www.DaikinApplied.com Software Version: 07.40		
Sales Engineer:	Jan. 16, 2026	Ver/Rev:	Sheet 1 of 1	Scale: NTS	Tolerance: +/-0.25"	Dwg Units: in [mm]

No change to this drawing may be made unless approved in writing by Daikin Applied. Purchaser must determine that the equipment is fit and sufficient for the job specifications.

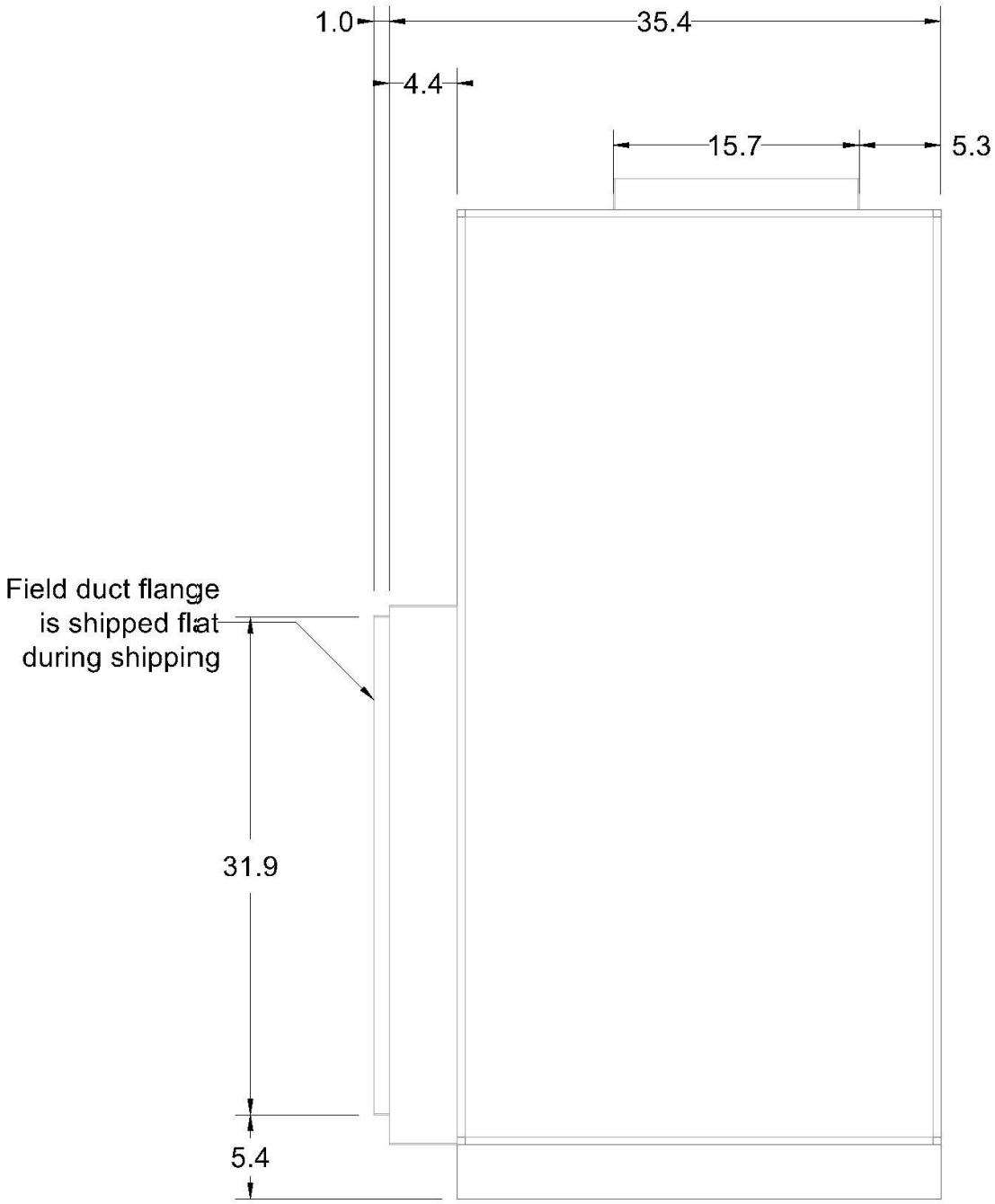

	Unit Tag: AHU-15,19,25 - Eiland (LH)			DAIKIN		
Product: PreciseLine® Air Handler	Project Name: Klein ISD Eiland ES AHU			13600 Industrial Park Blvd. Minneapolis, MN 55441		
Model: BCVD0401	Sales Office: HTS Texas			www.DaikinApplied.com	Software Version: 07.40	
Sales Engineer:	Jan. 16, 2026	Ver/Rev:	Sheet 1 of 1	Scale: NTS	Tolerance: +/-0.25"	Dwg Units: in [mm]

No change to this drawing may be made unless approved in writing by Daikin Applied. Purchaser must determine that the equipment is fit and sufficient for the job specifications.

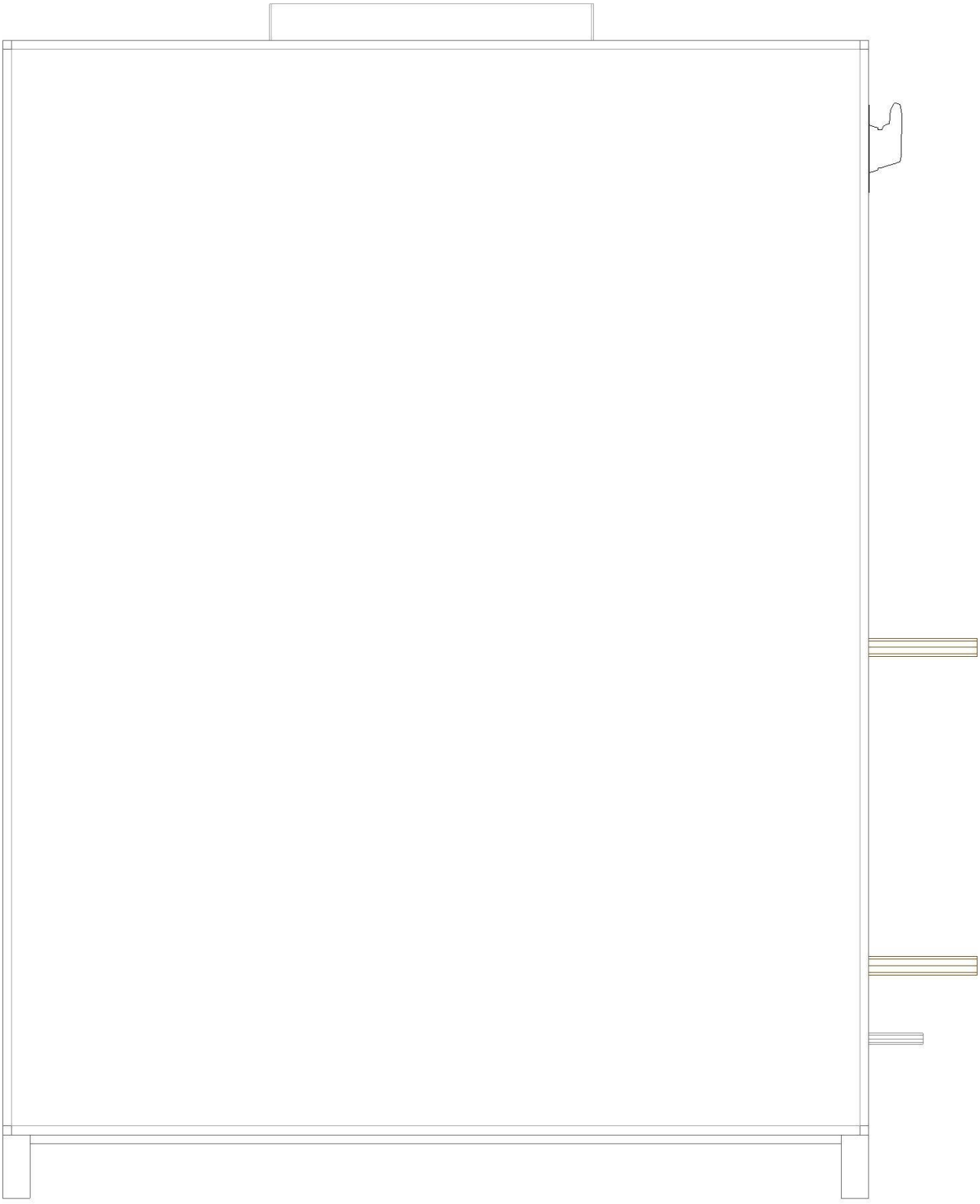

	Unit Tag: AHU-15,19,25 - Eiland (LH)			DAIKIN		
Product: PreciseLine® Air Handler	Project Name: Klein ISD Eiland ES AHU			13600 Industrial Park Blvd. Minneapolis, MN 55441		
Model: BCVD0401	Sales Office: HTS Texas			www.DaikinApplied.com	Software Version: 07.40	
Sales Engineer:	Jan. 16, 2026	Ver/Rev:	Sheet 1 of 1	Scale: NTS	Tolerance: +/-0.25"	Dwg Units: in [mm]

No change to this drawing may be made unless approved in writing by Daikin Applied. Purchaser must determine that the equipment is fit and sufficient for the job specifications.

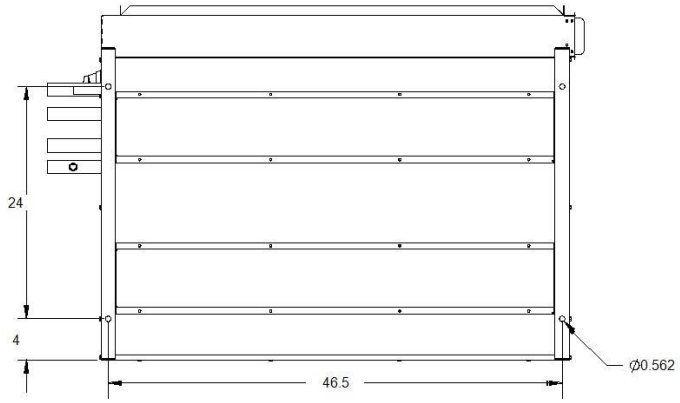

SECTION A-A

CABINET MOUNTING HOLE LOCATIONS

	Unit Tag: AHU-15,19,25 - Eiland (LH)			Sales Office: HTS Texas			DAIKIN
Product: PreciseLine® Air Handler	Project Name: Klein ISD Eiland ES AHU			Sales Engineer:			13600 Industrial Park Blvd. Minneapolis, MN 55441
Model: BCVD0401	Jan. 16, 2026	Ver/Rev:	Sheet: 1 of 1	Scale: NTS	Tolerance: +/- 0.25"	Dwg Units: in [mm]	www.DaikinApplied.com Software Version: 07.40

No change to this drawing may be made unless approved in writing by Daikin Applied. Purchaser must determine that the equipment is fit and sufficient for the job specifications.

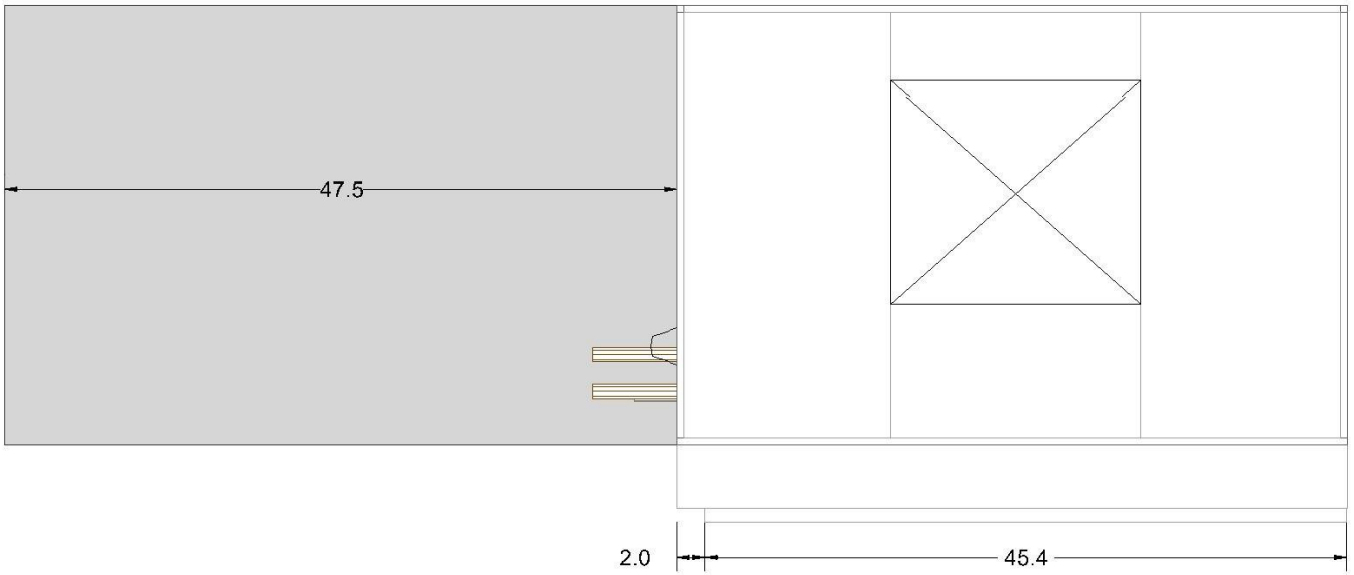

	Unit Tag: AHU-15,19,25 - Eiland (LH)			Sales Office: HTS Texas			DAIKIN
Product: PreciseLine® Air Handler	Project Name: Klein ISD Eiland ES AHU			Sales Engineer:			13600 Industrial Park Blvd. Minneapolis, MN 55441
Model: BCVD0401	Jan. 16, 2026	Ver/Rev:	Sheet: 1 of 1	Scale: NTS	Tolerance: +/- 0.25"	Dwg Units: in [mm]	www.DaikinApplied.com Software Version: 07.40

No change to this drawing may be made unless approved in writing by Daikin Applied. Purchaser must determine that the equipment is fit and sufficient for the job specifications.

BQZQ3P

Klein ISD Eiland ES AHU re

90

1/16/2026

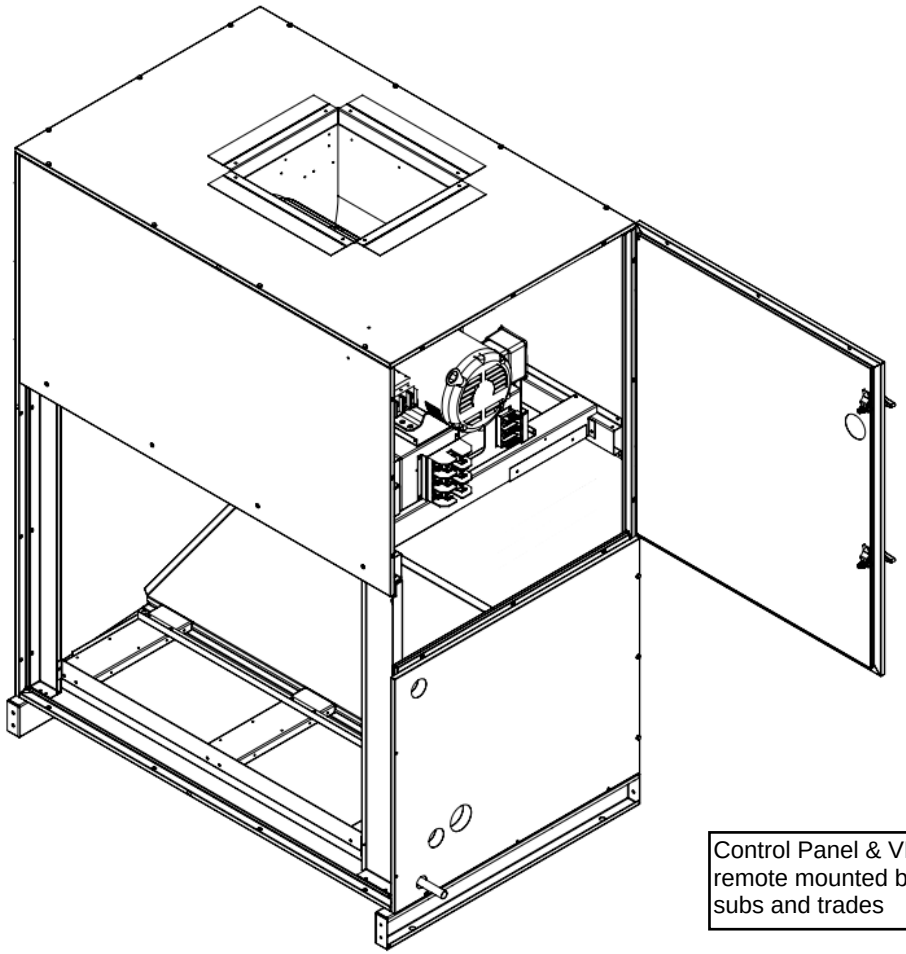

Control Panel & VFD to be remote mounted by Installing subs and trades

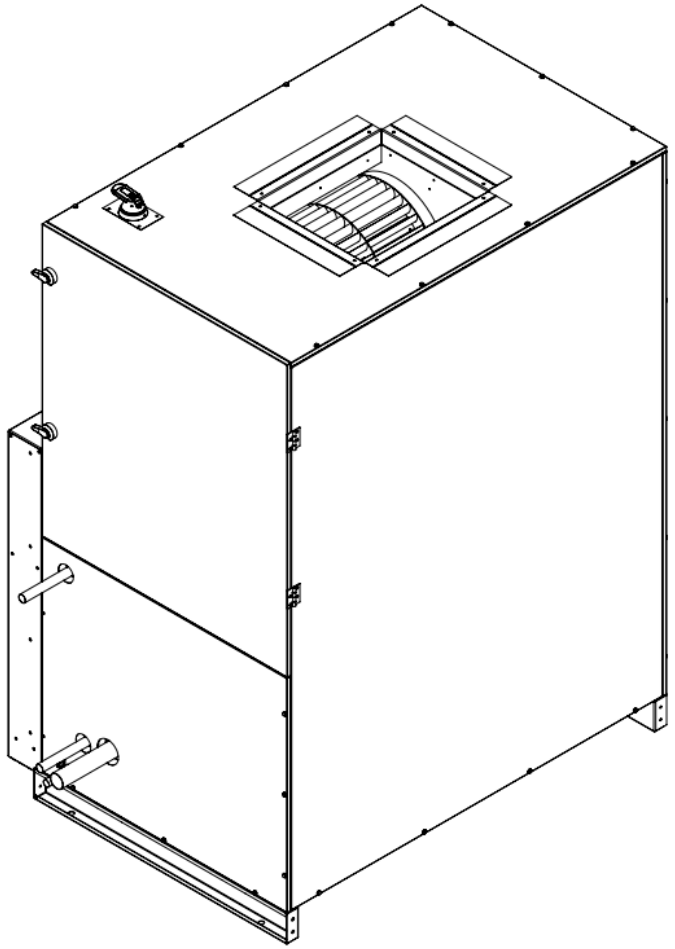

AHU-15,19,25 - Eiland (LH)

PreciseLine Drawings

	Unit Tag: AHU-15,19,25 - Eiland (LH)			Sales Office: HTS Texas			DAIKIN
Product: PreciseLine® Air Handler	Project Name: Klein ISD Eiland ES AHU			Sales Engineer:			13600 Industrial Park Blvd. Minneapolis, MN 55441
Model: BCVD0401	Jan. 16, 2026	Ver/Rev:	Sheet: 1 of 1	Scale: NTS	Tolerance: +/- 0.25"	Dwg Units: in [mm]	www.DaikinApplied.com Software Version: 07.40

No change to this drawing may be made unless approved in writing by Daikin Applied. Purchaser must determine that the equipment is fit and sufficient for the job specifications.

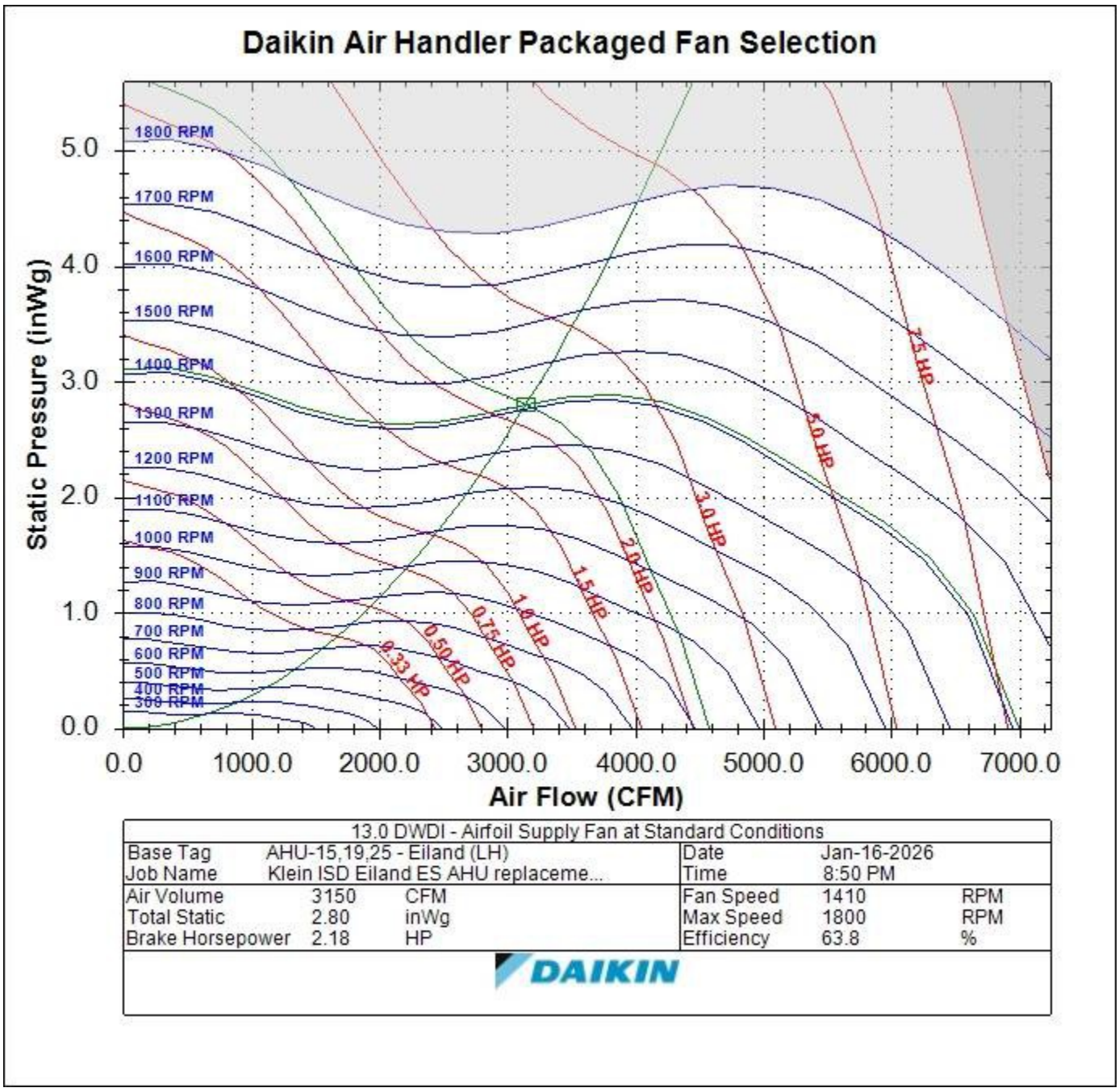
Daikin Air Handler Packaged Fan Selection
Static Pressure (inWg)
Air Flow (CFM)
0.0
1.0
2.0
3.0
4.0
5.0
0.0
1000.0
2000.0
3000.0
4000.0
5000.0
6000.0
7000.0
1800 RPM
1700 RPM
1600 RPM
1500 RPM
1400 RPM
1300 RPM
1200 RPM
1100 RPM
1000 RPM
900 RPM
800 RPM
700 RPM
600 RPM
500 RPM
400 RPM
300 RPM
0.33 HP
0.50 HP
0.75 HP
1.0 HP
1.5 HP
2.0 HP
3.0 HP
5.0 HP
7.5 HP
13.0 DWDI - Airfoil Supply Fan at Standard Conditions
Base Tag AHU-15,19,25 - Eiland (LH)
Job Name Klein ISD Eiland ES AHU replaceme...
Date Jan-16-2026
Time 8:50 PM
Air Volume 3150 CFM
Total Static 2.80 inWg
Brake Horsepower 2.18 HP
Fan Speed 1410 RPM
Max Speed 1800 RPM
Efficiency 63.8 %
DAIKIN

Job Information	*Technical Data Sheet*
Job Name	Klein ISD Eiland ES AHU replacements
Date	1/16/2026
Submitted By	Matt McPherson
Software Version	07.40
Unit Tag	AHU-17 - Eiland (LH)
FPA#	PL-250152-1



Unit Overview

Model Number	Voltage V/Hz/Phase	Airflow CFM	External Static Pressure inH_2O	Design Cooling Capacity Btu/hr
BCVD0301	460/60/3	1800	1.50	76982

Unit

Model Number:	BCVD0301
Unit Arrangement:	Vertical
Altitude:	0 ft

Physical

Dimensions and Weight (wet)

Length	Height	Width	Weight
31.0 in	61.5 in	44.0 in	402 lb

Construction

Insulation and Liners:	1" Injected Foam, R-6, Galvanized Steel Liner

Electrical

Field Connection	Unit FLA	Unit MCA	Unit MROPD	SCCR
Disconnect Switch	2.8 A	3.5 A	15 A	5 kA

Filter

Filter Access	Filter Depth	MERV Rating	(Quantity) Height x Width x Depth
Side	2 in	MERV 13	(2) 25 x 20

Primary Hydronic Coil

Physical

Fins per Inch	Rows	Casing Material	Face Area ft²	Face Velocity ft/min
12	6	Stainless Steel	6.2	288.9

Connection

Size	Type	Location
1.625	SWT	Left Hand

Drain Pan

Material	Connection
Stainless Steel	0.75 in

Performance

Capacity		Air Temperature			
		Entering		Leaving	
Total Btu/hr	Sensible Btu/hr	Dry Bulb °F	Wet Bulb °F	Dry Bulb °F	Wet Bulb °F
76982	49151	78.0	67.0	53.0	53.0

Fluid

Type	Entering Temperature °F	Leaving Temperature °F	Flow Rate gpm	Pressure Drop ft H_2O
Water	45.0	57.8	12.0	2.87

Supply Fan

Performance

Airflow	Total Static Pressure	Fan Speed	Controller Input Signal	Brake Horsepower	Total Input Power	Fan Energy Index	Altitude
1800	2.53 inH_2O	1616 rpm	8.9 VDC	1.15 HP	1.32 HP	1.397	0 ft

Motor

Type	(Qty) Horsepower	Motor Control	(Qty) FLA
FC Direct Drive NEMA Premium Efficiency Motor	(1) 2.0 HP	0-10V Modulating	(1) 2.8 A

Unit Discharge Conditions

AirTemperature

Motor Heat Btu/hr	Unit Leaving Dry Bulb °F	Unit Leaving Wet Bulb °F	Unit Leaving Dewpoint °F
3692	54.9	53.6	52.7

Supply Fan Total Pressure Drop Calculation

External Static Pressure:	1.50 inH_2O
Primary Filter:	0.20 inH_2O
Dirty/Additional Filter:	0.50 inH_2O
Cooling Coil:	0.33 inH_2O
Total Static Pressure (Supply):	2.53 inH_2O

Sound Power

	Sound Power (db)							
Frequency	**63 Hz**	**125 Hz**	**250 Hz**	**500 Hz**	**1 kHz**	**2 kHz**	**4 kHz**	**8 kHz**
Inlet	83	80	72	69	72	67	67	57
Discharge	91	86	79	77	78	74	73	67
Radiated	71	68	58	52	57	56	43	33

Options

Controls	
Overflow Switch:	Factory mounted Overflow Switch

Warranty

Parts:	1 year extended parts only

AHRI Certification

All equipment is rated and certified in accordance with AHRI 430.

Notes

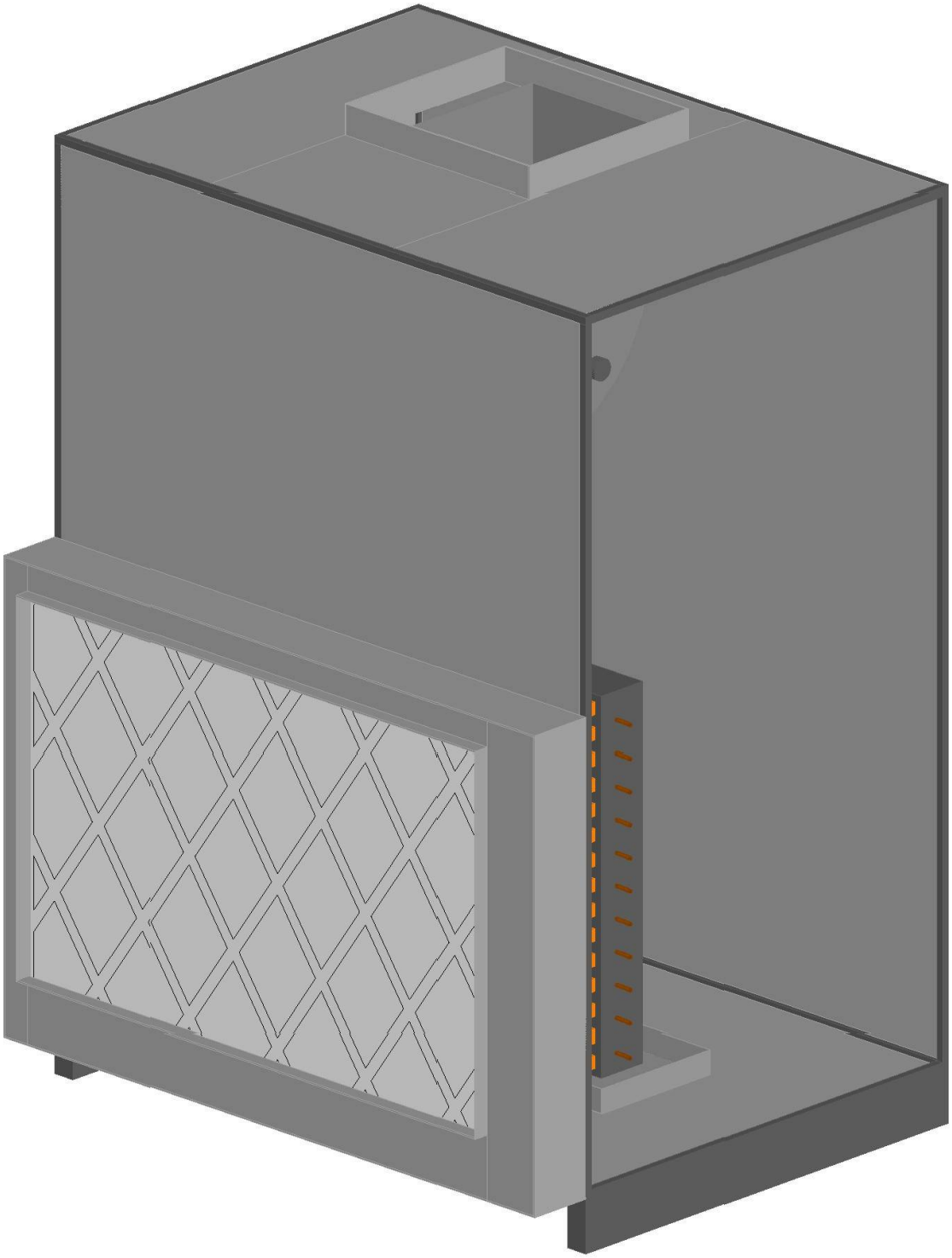

	Unit Tag: AHU-17 - Eiland (LH)			DAIKIN		
Product: PreciseLine® Air Handler	Project Name: Klein ISD Eiland ES AHU			13600 Industrial Park Blvd. Minneapolis, MN 55441		
Model: BCVD0301	Sales Office: HTS Texas			www.DaikinApplied.com Software Version: 07.40		
Sales Engineer:	Jan. 16, 2026	Ver/Rev:	Sheet 1 of 1	Scale: NTS	Tolerance: +/-0.25"	Dwg Units: in [mm]

No change to this drawing may be made unless approved in writing by Daikin Applied. Purchaser must determine that the equipment is fit and sufficient for the job specifications.

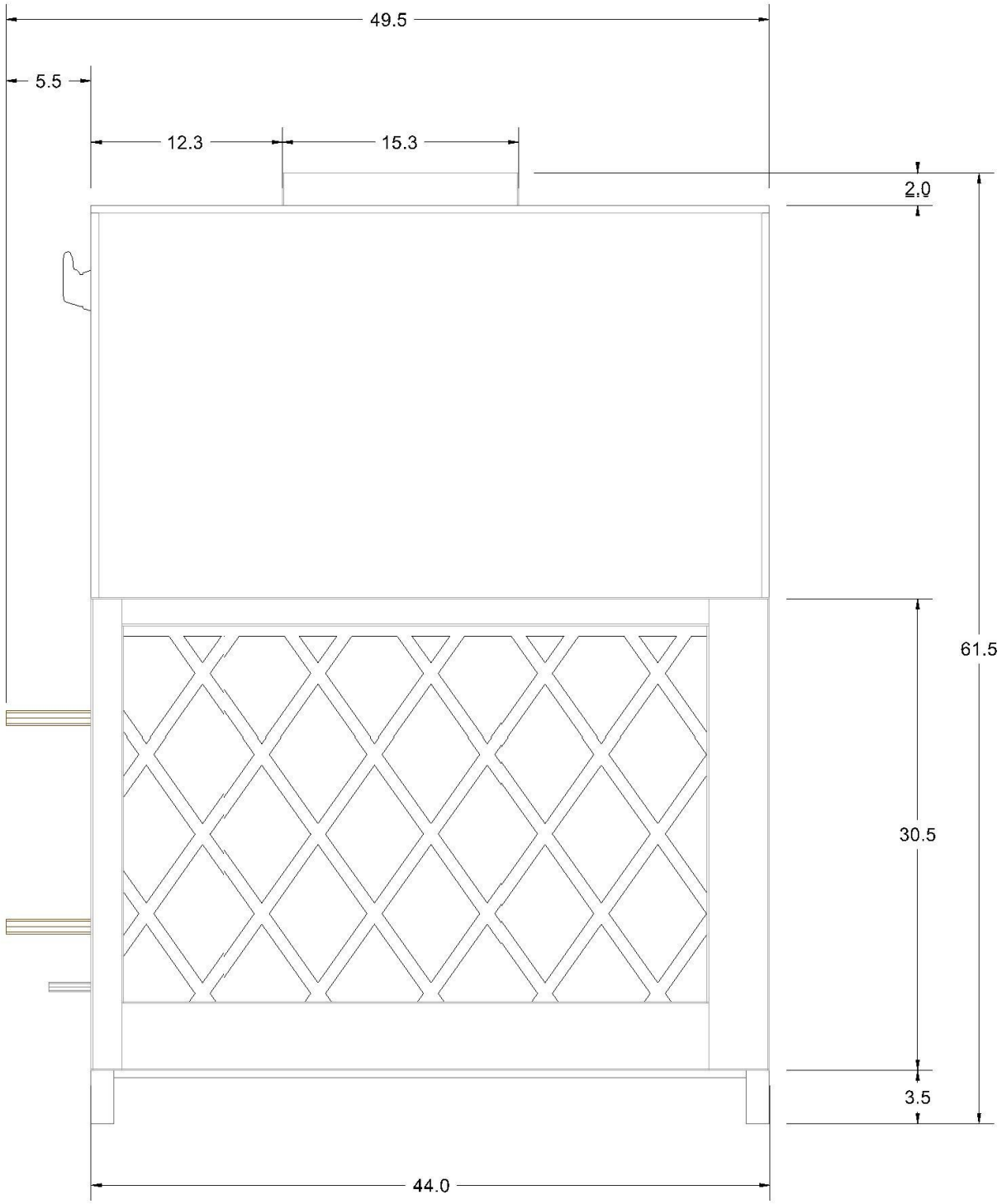

	Unit Tag: AHU-17 - Eiland (LH)			DAIKIN		
Product: PreciseLine® Air Handler	Project Name: Klein ISD Eiland ES AHU			13600 Industrial Park Blvd. Minneapolis, MN 55441		
Model: BCVD0301	Sales Office: HTS Texas			www.DaikinApplied.com	Software Version: 07.40	
Sales Engineer:	Jan. 16, 2026	Ver/Rev:	Sheet 1 of 1	Scale: NTS	Tolerance: +/-0.25"	Dwg Units: in [mm]

No change to this drawing may be made unless approved in writing by Daikin Applied. Purchaser must determine that the equipment is fit and sufficient for the job specifications.

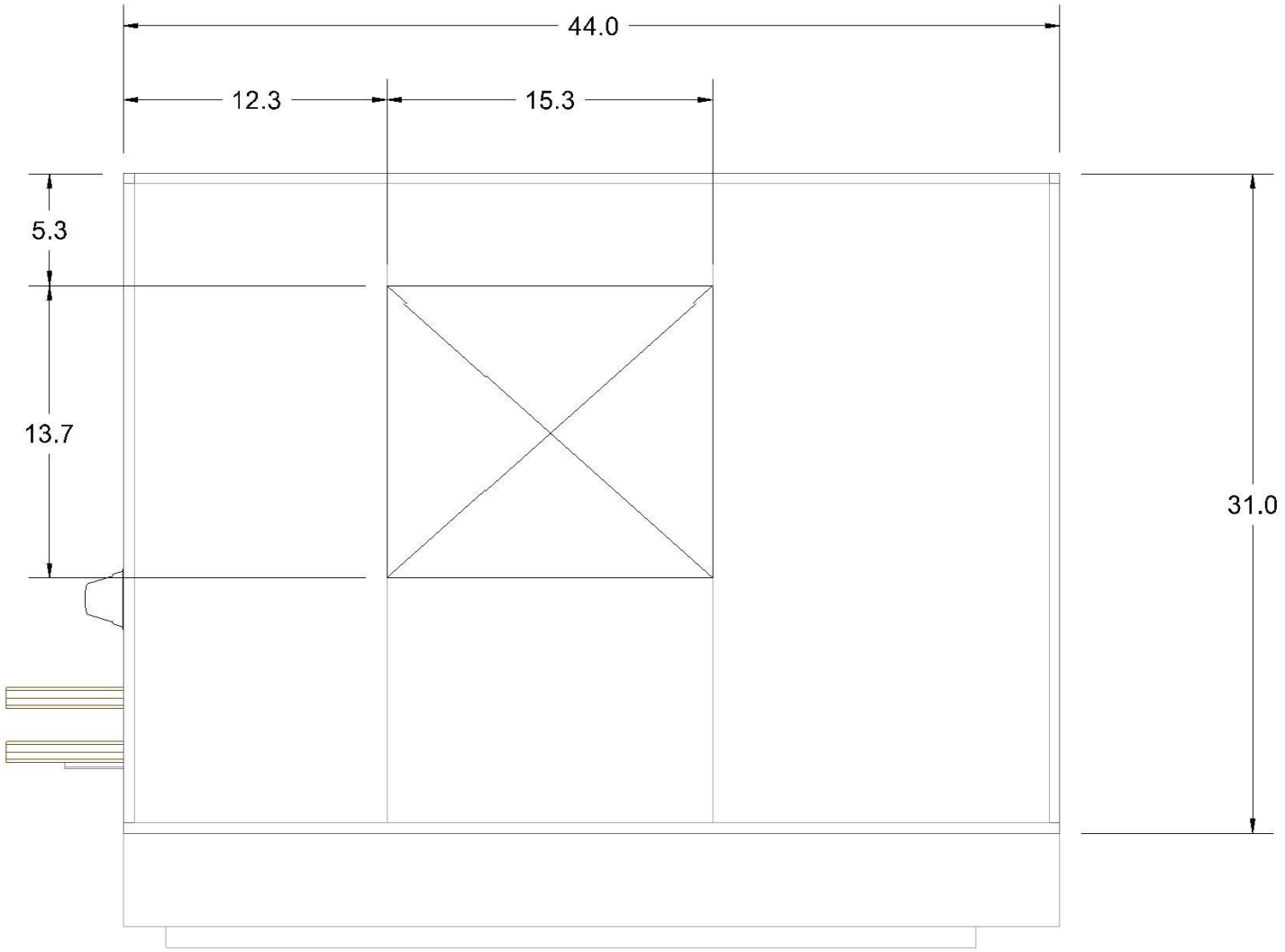

	Unit Tag: AHU-17 - Eiland (LH)			Sales Office: HTS Texas			DAIKIN
Product: PreciseLine® Air Handler	Project Name: Klein ISD Eiland ES AHU			Sales Engineer:			13600 Industrial Park Blvd. Minneapolis, MN 55441
Model: BCVD0301	Jan. 16, 2026	Ver/Rev:	Sheet: 1 of 1	Scale: NTS	Tolerance: +/- 0.25"	Dwg Units: in [mm]	www.DaikinApplied.com Software Version: 07.40

No change to this drawing may be made unless approved in writing by Daikin Applied. Purchaser must determine that the equipment is fit and sufficient for the job specifications.

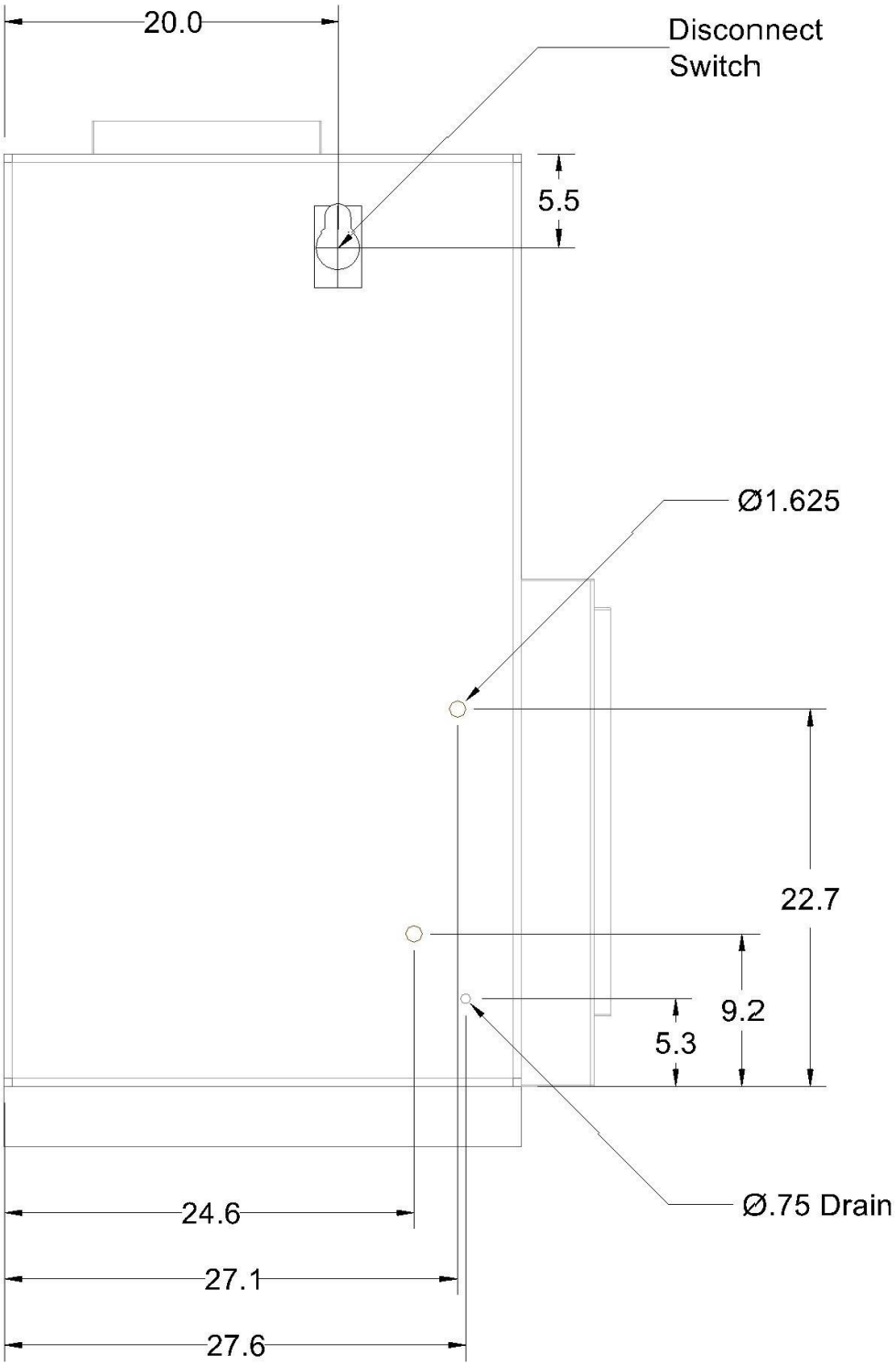

	Unit Tag: AHU-17 - Eiland (LH)			DAIKIN		
Product: PreciseLine® Air Handler	Project Name: Klein ISD Eiland ES AHU			13600 Industrial Park Blvd. Minneapolis, MN 55441		
Model: BCVD0301	Sales Office: HTS Texas			www.DaikinApplied.com	Software Version: 07.40	
Sales Engineer:	Jan. 16, 2026	Ver/Rev:	Sheet 1 of 1	Scale: NTS	Tolerance: +/-0.25"	Dwg Units: in [mm]

No change to this drawing may be made unless approved in writing by Daikin Applied. Purchaser must determine that the equipment is fit and sufficient for the job specifications.

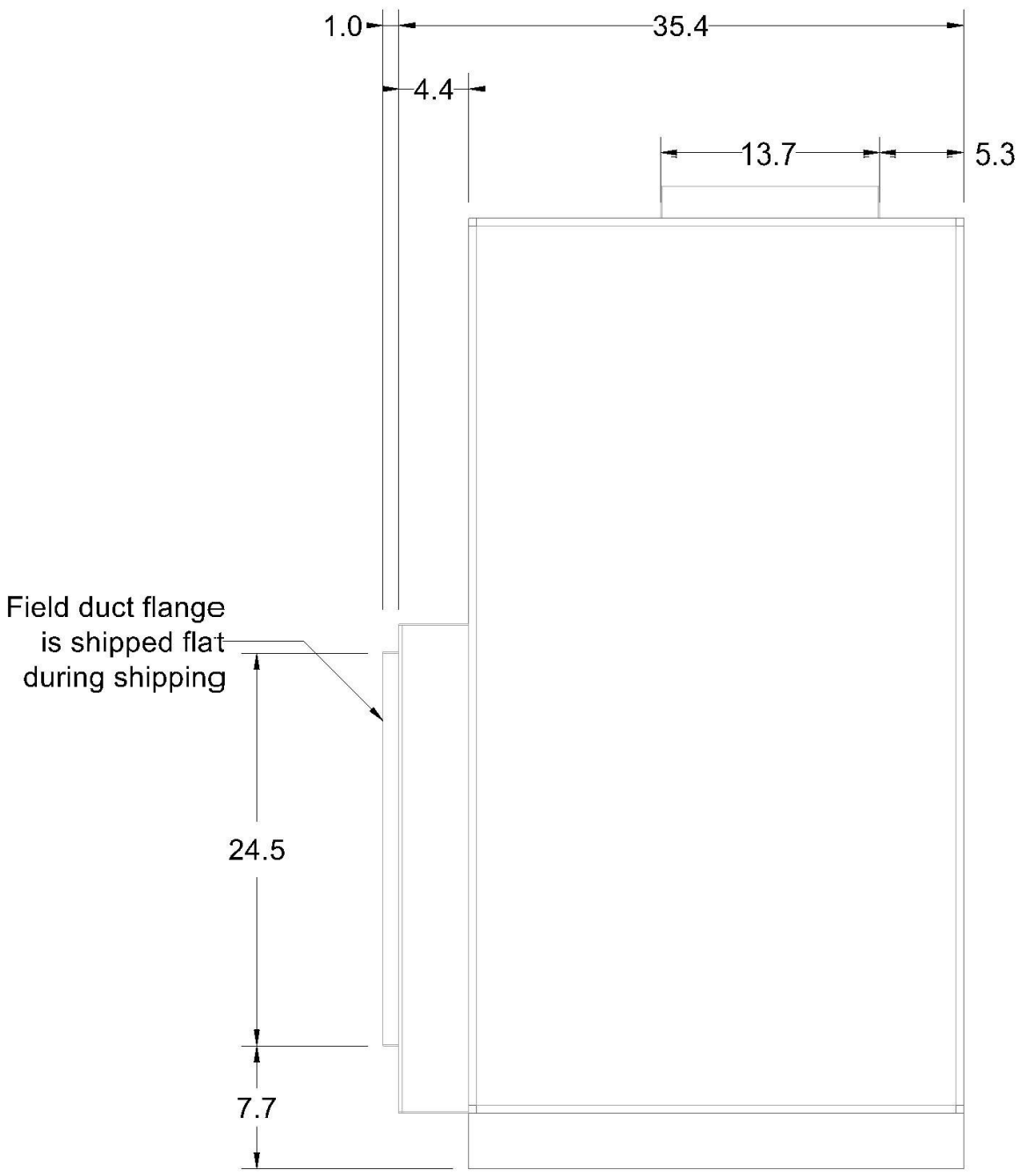

	Unit Tag: AHU-17 - Eiland (LH)			DAIKIN		
Product: PreciseLine® Air Handler	Project Name: Klein ISD Eiland ES AHU			13600 Industrial Park Blvd. Minneapolis, MN 55441		
Model: BCVD0301	Sales Office: HTS Texas			www.DaikinApplied.com	Software Version: 07.40	
Sales Engineer:	Jan. 16, 2026	Ver/Rev:	Sheet 1 of 1	Scale: NTS	Tolerance: +/-0.25"	Dwg Units: in [mm]

No change to this drawing may be made unless approved in writing by Daikin Applied. Purchaser must determine that the equipment is fit and sufficient for the job specifications.

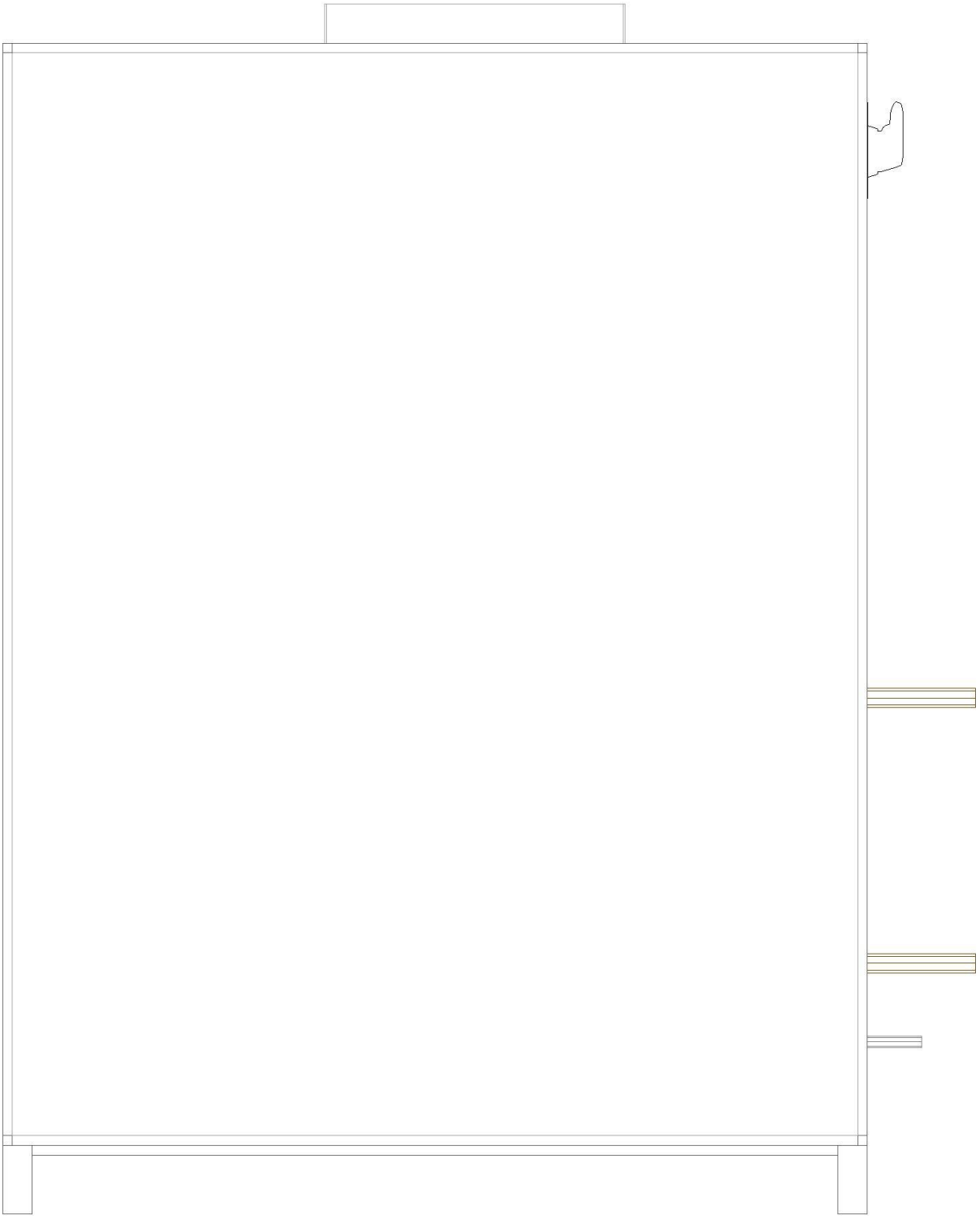

	Unit Tag: AHU-17 - Eiland (LH)			DAIKIN		
Product: PreciseLine® Air Handler	Project Name: Klein ISD Eiland ES AHU			13600 Industrial Park Blvd. Minneapolis, MN 55441		
Model: BCVD0301	Sales Office: HTS Texas			www.DaikinApplied.com	Software Version: 07.40	
Sales Engineer:	Jan. 16, 2026	Ver/Rev:	Sheet 1 of 1	Scale: NTS	Tolerance: +/-0.25"	Dwg Units: in [mm]

No change to this drawing may be made unless approved in writing by Daikin Applied. Purchaser must determine that the equipment is fit and sufficient for the job specifications.

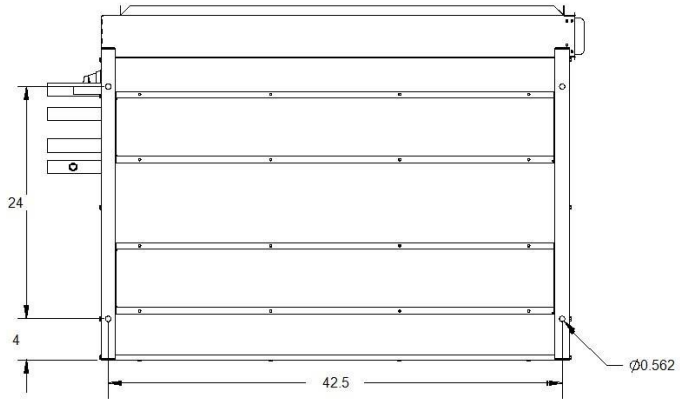

SECTION A-A

CABINET MOUNTING HOLE LOCATIONS

	Unit Tag: AHU-17 - Eiland (LH)			Sales Office: HTS Texas			DAIKIN
Product: PreciseLine® Air Handler	Project Name: Klein ISD Eiland ES AHU			Sales Engineer:			13600 Industrial Park Blvd. Minneapolis, MN 55441
Model: BCVD0301	Jan. 16, 2026	Ver/Rev:	Sheet: 1 of 1	Scale: NTS	Tolerance: +/- 0.25"	Dwg Units: in [mm]	www.DaikinApplied.com Software Version: 07.40

No change to this drawing may be made unless approved in writing by Daikin Applied. Purchaser must determine that the equipment is fit and sufficient for the job specifications.

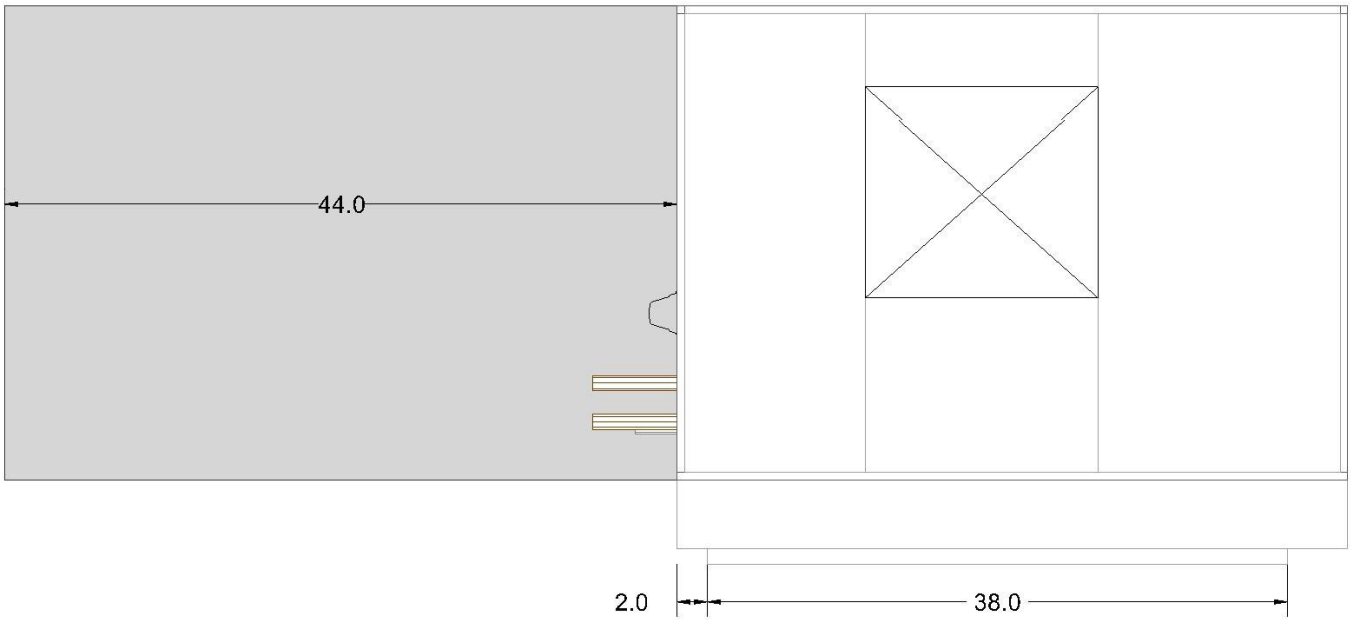

	Unit Tag: AHU-17 - Eiland (LH)			Sales Office: HTS Texas			DAIKIN
Product: PreciseLine® Air Handler	Project Name: Klein ISD Eiland ES AHU			Sales Engineer:			13600 Industrial Park Blvd. Minneapolis, MN 55441
Model: BCVD0301	Jan. 16, 2026	Ver/Rev:	Sheet: 1 of 1	Scale: NTS	Tolerance: +/- 0.25"	Dwg Units: in [mm]	www.DaikinApplied.com Software Version: 07.40

No change to this drawing may be made unless approved in writing by Daikin Applied. Purchaser must determine that the equipment is fit and sufficient for the job specifications.

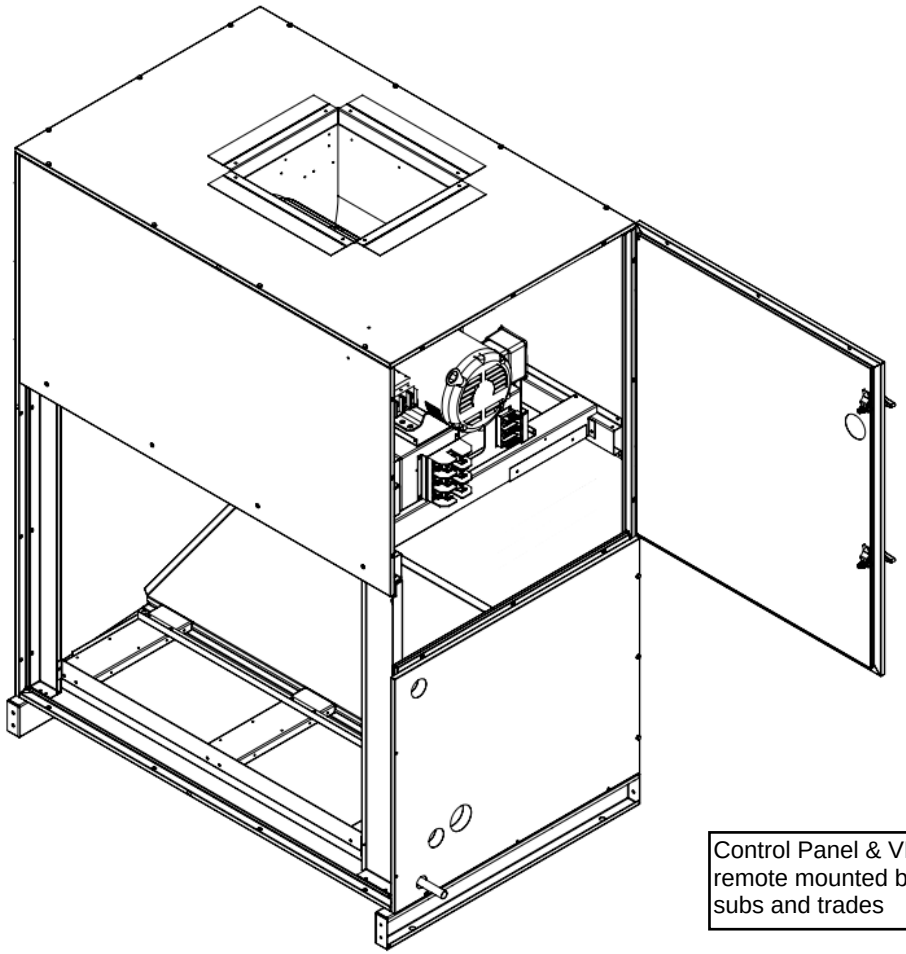

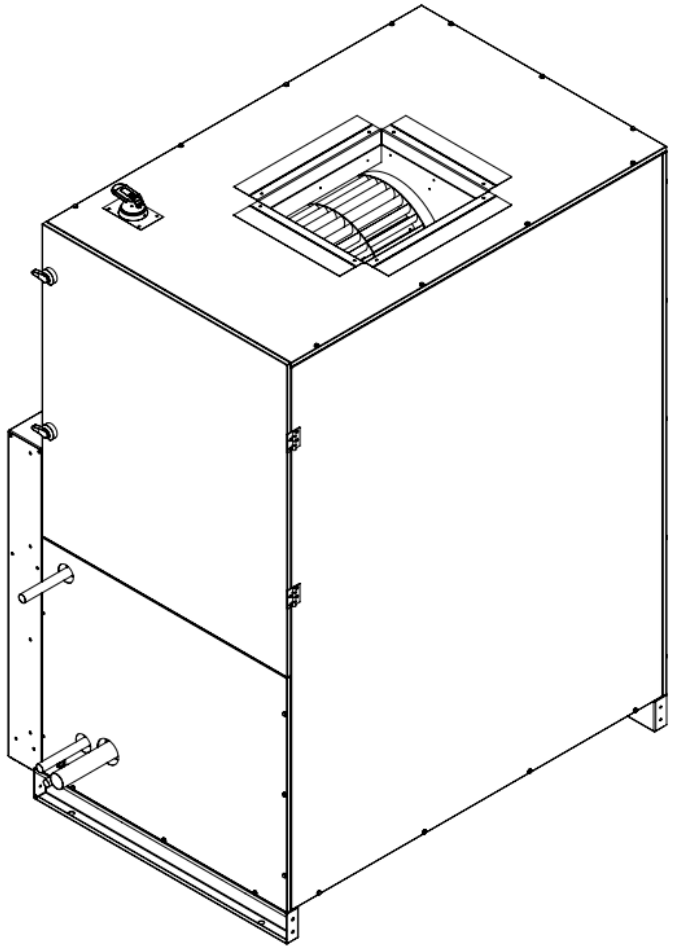

Control Panel & VFD to be remote mounted by Installing subs and trades

	Unit Tag: AHU-17 - Eiland (LH)			Sales Office: HTS Texas			DAIKIN
Product: PreciseLine® Air Handler	Project Name: Klein ISD Eiland ES AHU			Sales Engineer:			13600 Industrial Park Blvd. Minneapolis, MN 55441
Model: BCVD0301	Jan. 16, 2026	Ver/Rev:	Sheet: 1 of 1	Scale: NTS	Tolerance: +/- 0.25"	Dwg Units: in [mm]	www.DaikinApplied.com Software Version: 07.40

No change to this drawing may be made unless approved in writing by Daikin Applied. Purchaser must determine that the equipment is fit and sufficient for the job specifications.

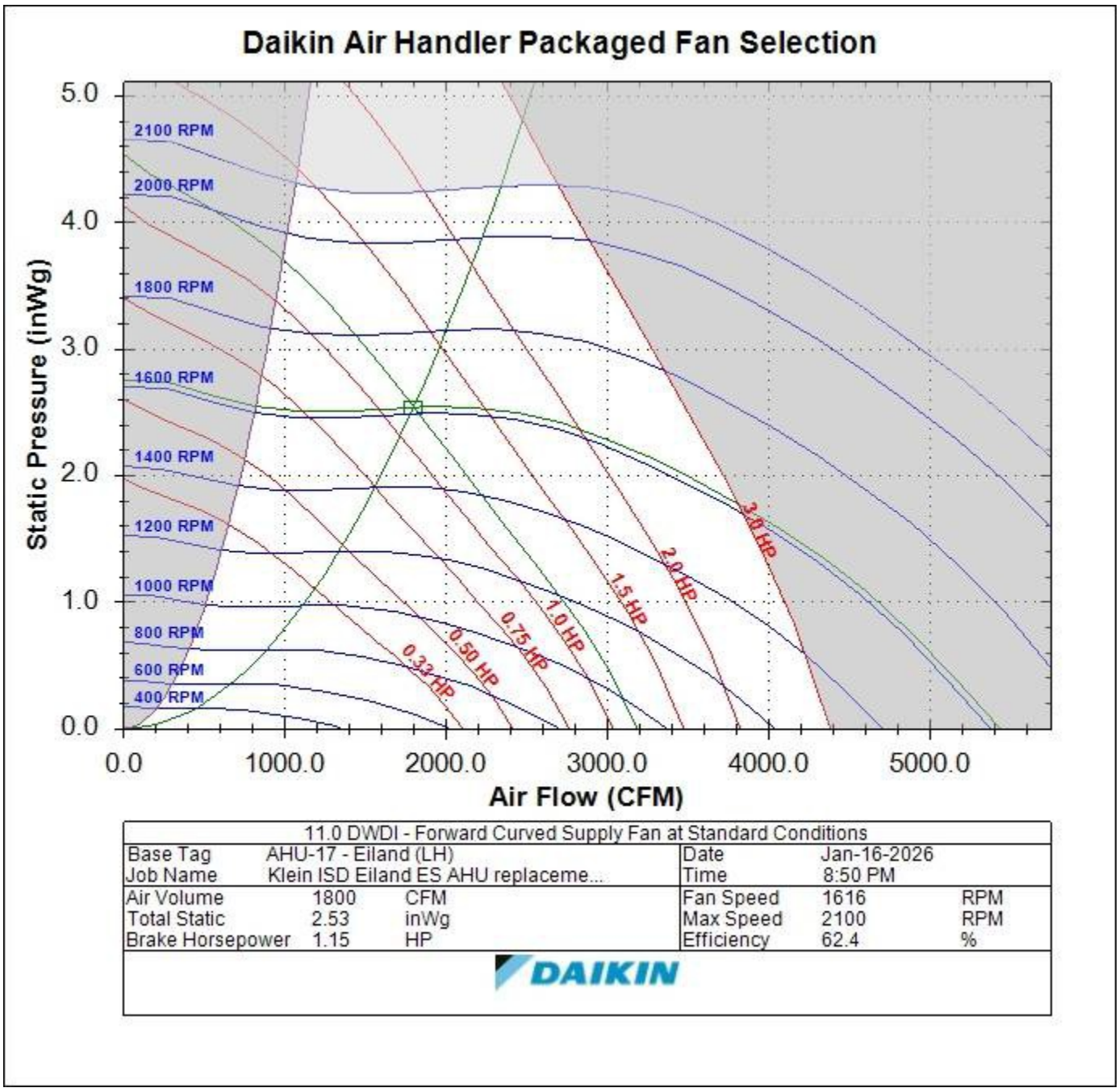

11.0 DWDI - Forward Curved Supply Fan at Standard Conditions					
Base Tag	AHU-17 - Eiland (LH)		Date	Jan-16-2026	
Job Name	Klein ISD Eiland ES AHU replaceme...		Time	8:50 PM	
Air Volume	1800	CFM	Fan Speed	1616	RPM
Total Static	2.53	inWg	Max Speed	2100	RPM
Brake Horsepower	1.15	HP	Efficiency	62.4	%

DAIKIN

Job Information	*Technical Data Sheet*
Job Name	Klein ISD Eiland ES AHU replacements
Date	1/16/2026
Submitted By	Matt McPherson
Software Version	07.40
Unit Tag	AHU-20 - Eiland (RH)
FPA#	PL-250152-1



Unit Overview

Model Number	Voltage V/Hz/Phase	Airflow CFM	External Static Pressure inH_2O	Design Cooling Capacity Btu/hr
BCVD0301	460/60/3	2400	1.50	100352

Unit

Model Number:	BCVD0301
Unit Arrangement:	Vertical
Altitude:	0 ft

Physical

Dimensions and Weight (wet)

Length	Height	Width	Weight
31.0 in	61.5 in	44.0 in	402 lb

Construction

Insulation and Liners:	1" Injected Foam, R-6, Galvanized Steel Liner

Electrical

Field Connection	Unit FLA	Unit MCA	Unit MROPD	SCCR
Disconnect Switch	3.8 A	4.7 A	15 A	5 kA

Filter

Filter Access	Filter Depth	MERV Rating	(Quantity) Height x Width x Depth
Side	2 in	MERV 13	(2) 25 x 20

Primary Hydronic Coil

Physical

Fins per Inch	Rows	Casing Material	Face Area ft²	Face Velocity ft/min
12	6	Stainless Steel	6.2	385.2

Connection

Size	Type	Location
1.625	SWT	Right Hand

Drain Pan

Material	Connection
Stainless Steel	0.75 in

Performance

Capacity		Air Temperature			
		Entering		Leaving	
Total Btu/hr	Sensible Btu/hr	Dry Bulb °F	Wet Bulb °F	Dry Bulb °F	Wet Bulb °F
100352	64526	78.0	67.0	53.4	53.4

Fluid

Type	Entering Temperature °F	Leaving Temperature °F	Flow Rate gpm	Pressure Drop ft H_2O
Water	45.0	57.5	16.0	4.77

Supply Fan

Performance

Airflow	Total Static Pressure	Fan Speed	Controller Input Signal	Brake Horsepower	Total Input Power	Fan Energy Index	Altitude
2400	2.79 inH_2O	1699 rpm	9.4 VDC	1.78 HP	2.00 HP	1.265	0 ft

Motor

Type	(Qty) Horsepower	Motor Control	(Qty) FLA
FC Direct Drive NEMA Premium Efficiency Motor	(1) 3.0 HP	0-10V Modulating	(1) 3.8 A

Unit Discharge Conditions

AirTemperature

Motor Heat Btu/hr	Unit Leaving Dry Bulb °F	Unit Leaving Wet Bulb °F	Unit Leaving Dewpoint °F
5296	55.5	54.0	53.1

Supply Fan Total Pressure Drop Calculation

External Static Pressure:	1.50 inH_2O
Primary Filter:	0.28 inH_2O
Dirty/Additional Filter:	0.50 inH_2O
Cooling Coil:	0.51 inH_2O
Total Static Pressure (Supply):	2.79 inH_2O

Sound Power

	Sound Power (db)							
Frequency	**63 Hz**	**125 Hz**	**250 Hz**	**500 Hz**	**1 kHz**	**2 kHz**	**4 kHz**	**8 kHz**
Inlet	86	83	75	72	73	72	70	60
Discharge	94	89	82	80	79	79	76	70
Radiated	74	71	61	56	59	61	46	36

Options

Controls	
Overflow Switch:	Factory mounted Overflow Switch

Warranty

Parts:	1 year extended parts only

AHRI Certification

All equipment is rated and certified in accordance with AHRI 430.

Notes

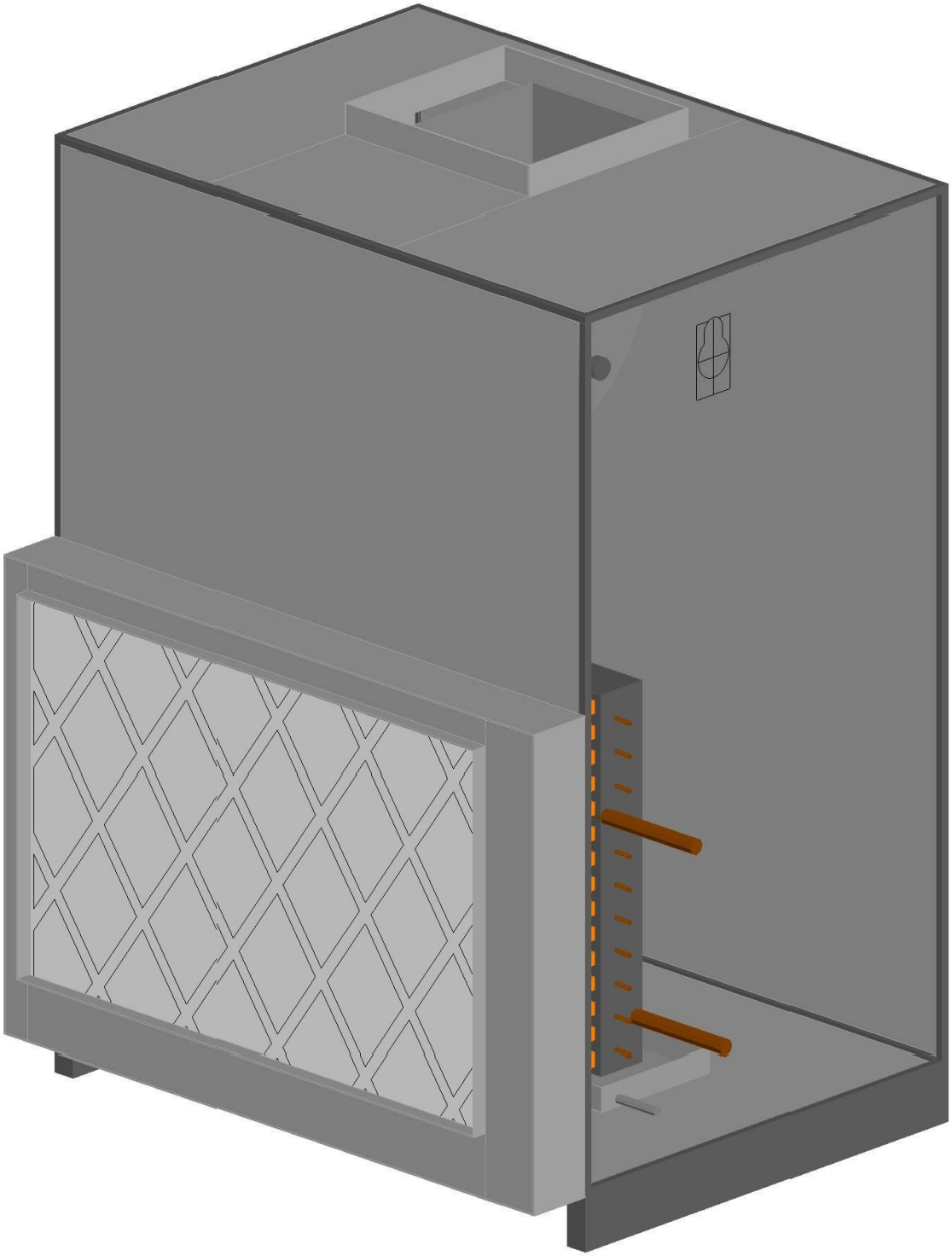

	Unit Tag: AHU-20 - Eiland (RH)			DAIKIN		
Product: PreciseLine® Air Handler	Project Name: Klein ISD Eiland ES AHU			13600 Industrial Park Blvd. Minneapolis, MN 55441		
Model: BCVD0301	Sales Office: HTS Texas			www.DaikinApplied.com	Software Version: 07.40	
Sales Engineer:	Jan. 16, 2026	Ver/Rev:	Sheet 1 of 1	Scale: NTS	Tolerance: +/-0.25"	Dwg Units: in [mm]

No change to this drawing may be made unless approved in writing by Daikin Applied. Purchaser must determine that the equipment is fit and sufficient for the job specifications.

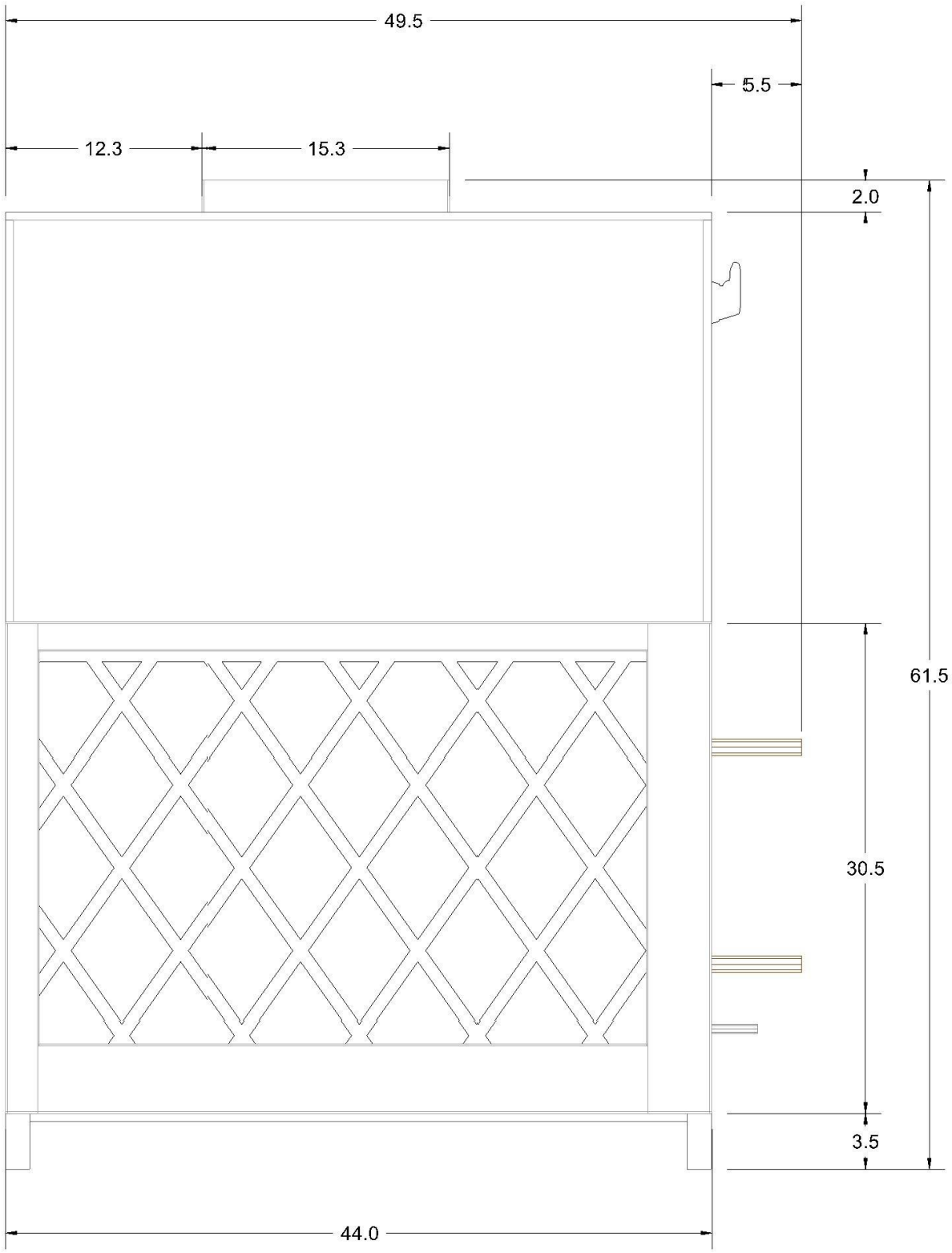

	Unit Tag: AHU-20 - Eiland (RH)			DAIKIN		
Product: PreciseLine® Air Handler	Project Name: Klein ISD Eiland ES AHU			13600 Industrial Park Blvd. Minneapolis, MN 55441		
Model: BCVD0301	Sales Office: HTS Texas			www.DaikinApplied.com	Software Version: 07.40	
Sales Engineer:	Jan. 16, 2026	Ver/Rev:	Sheet 1 of 1	Scale: NTS	Tolerance: +/-0.25"	Dwg Units: in [mm]

No change to this drawing may be made unless approved in writing by Daikin Applied. Purchaser must determine that the equipment is fit and sufficient for the job specifications.

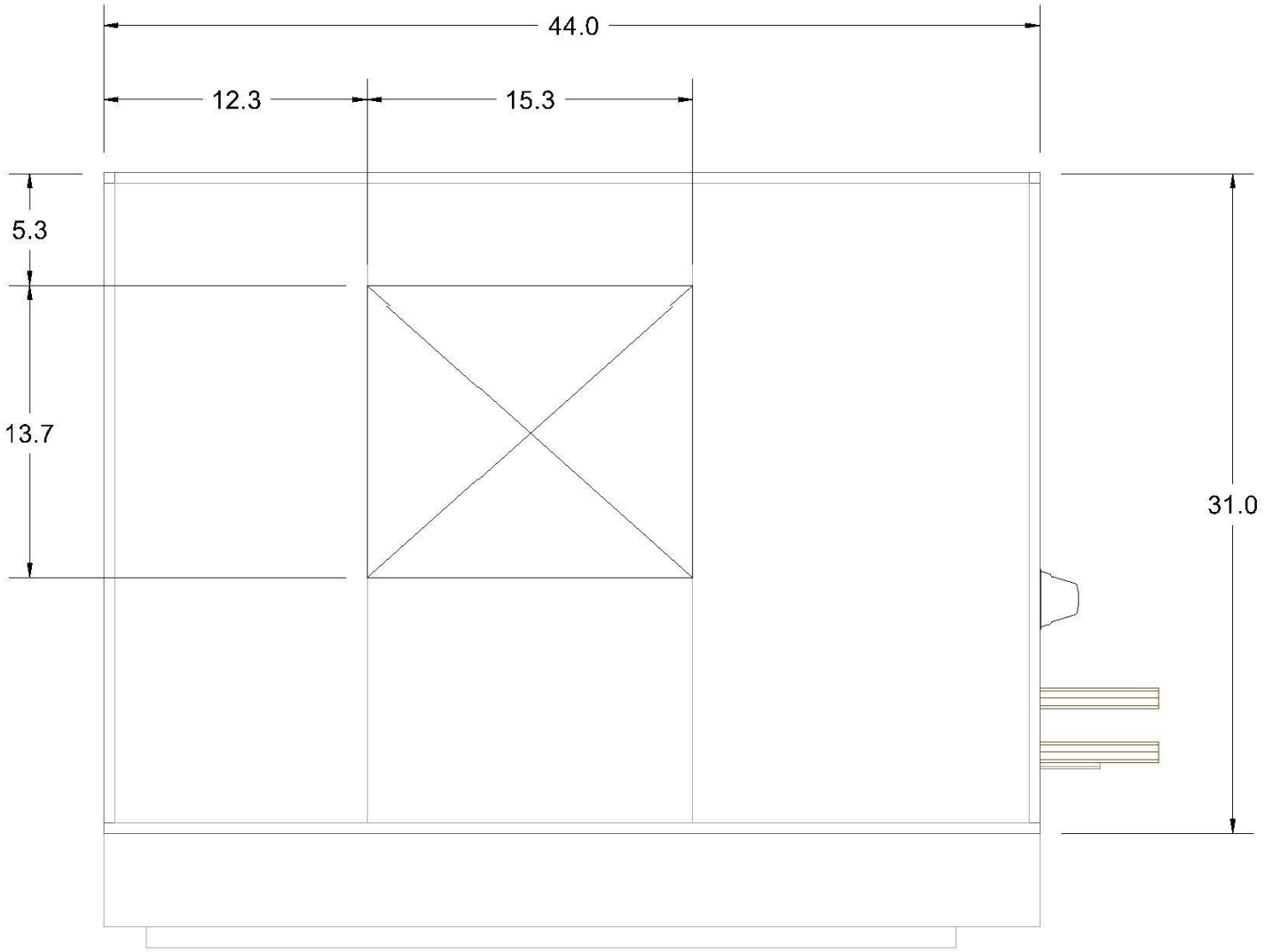

	Unit Tag: AHU-20 - Eiland (RH)			Sales Office: HTS Texas			DAIKIN
Product: PreciseLine® Air Handler	Project Name: Klein ISD Eiland ES AHU			Sales Engineer:			13600 Industrial Park Blvd. Minneapolis, MN 55441
Model: BCVD0301	Jan. 16, 2026	Ver/Rev:	Sheet: 1 of 1	Scale: NTS	Tolerance: +/- 0.25"	Dwg Units: in [mm]	www.DaikinApplied.com Software Version: 07.40

No change to this drawing may be made unless approved in writing by Daikin Applied. Purchaser must determine that the equipment is fit and sufficient for the job specifications.

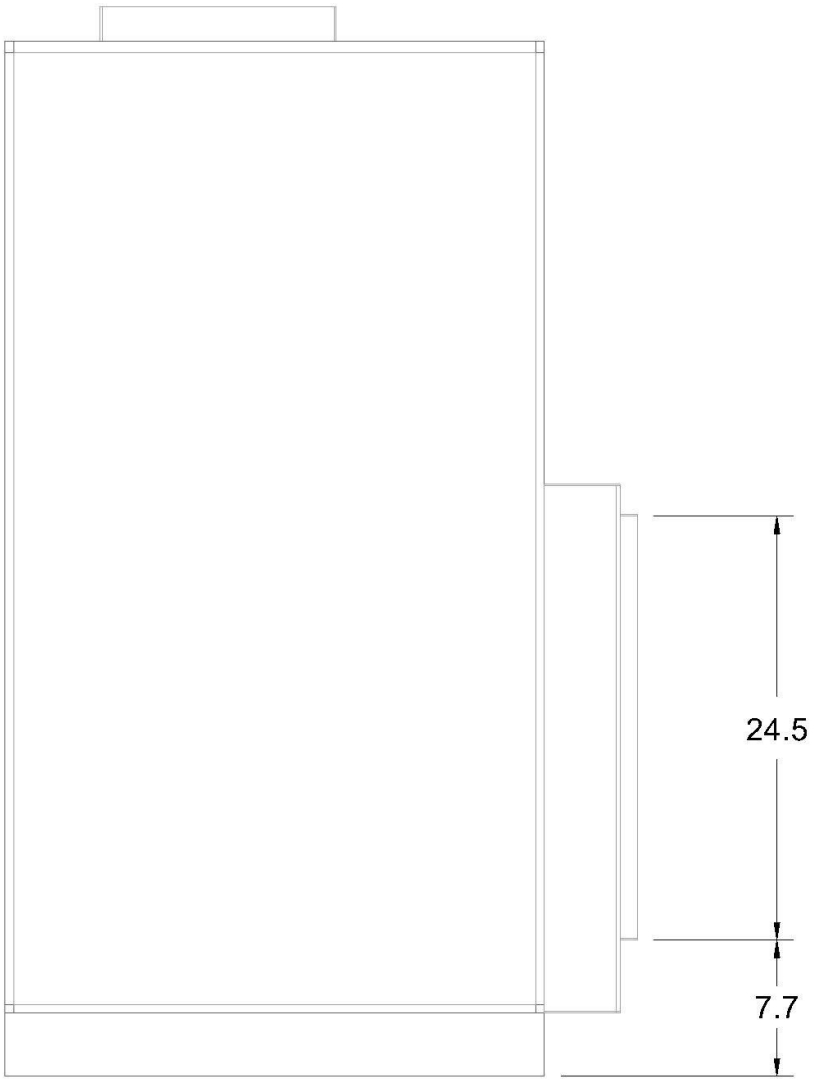

	Unit Tag: AHU-20 - Eiland (RH)			DAIKIN		
Product: PreciseLine® Air Handler	Project Name: Klein ISD Eiland ES AHU			13600 Industrial Park Blvd. Minneapolis, MN 55441		
Model: BCVD0301	Sales Office: HTS Texas			www.DaikinApplied.com Software Version: 07.40		
Sales Engineer:	Jan. 16, 2026	Ver/Rev:	Sheet 1 of 1	Scale: NTS	Tolerance: +/-0.25"	Dwg Units: in [mm]

No change to this drawing may be made unless approved in writing by Daikin Applied. Purchaser must determine that the equipment is fit and sufficient for the job specifications.

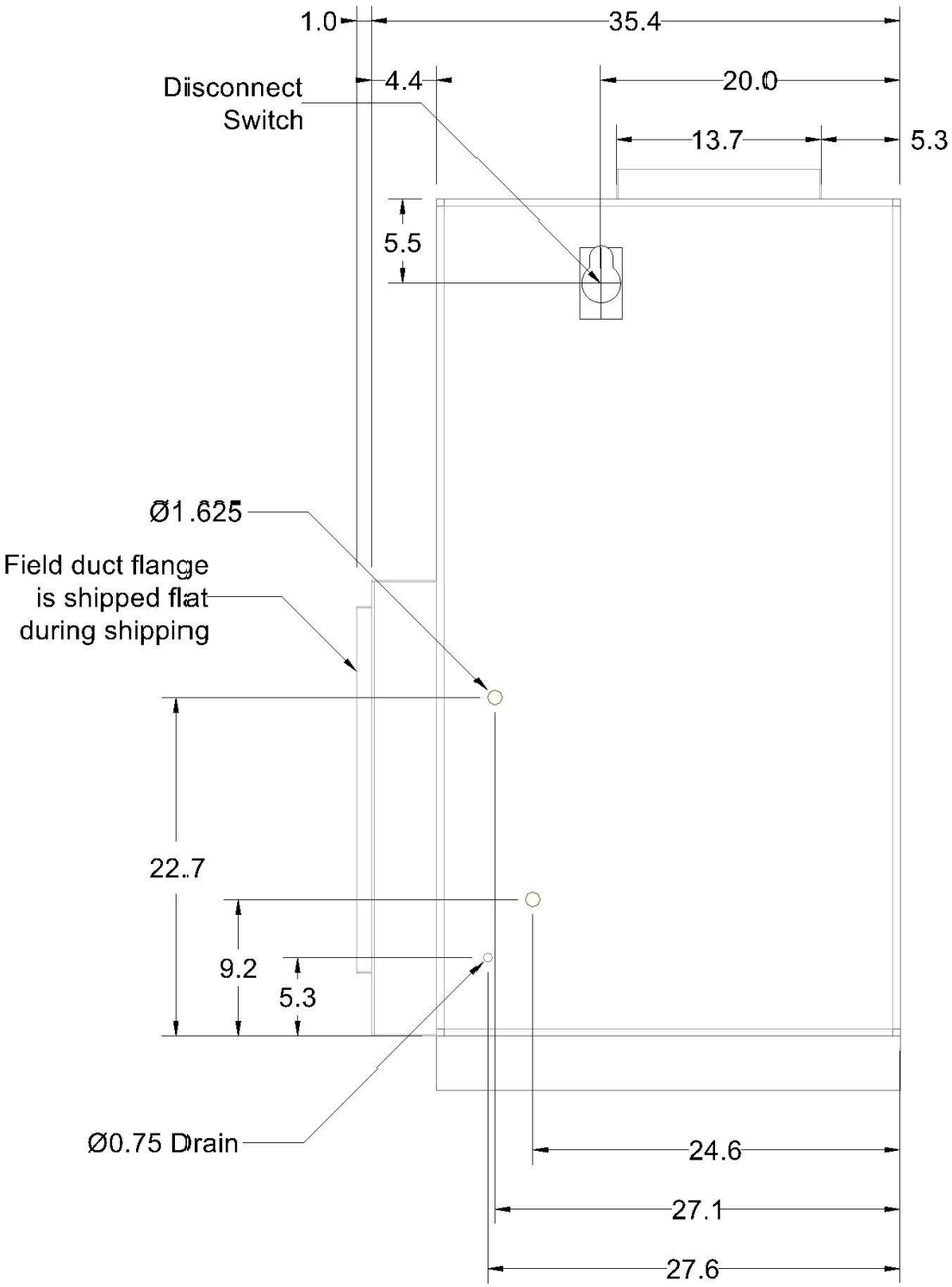

	Unit Tag: AHU-20 - Eiland (RH)			DAIKIN		
Product: PreciseLine® Air Handler	Project Name: Klein ISD Eiland ES AHU			13600 Industrial Park Blvd. Minneapolis, MN 55441		
Model: BCVD0301	Sales Office: HTS Texas			www.DaikinApplied.com	Software Version: 07.40	
Sales Engineer:	Jan. 16, 2026	Ver/Rev:	Sheet 1 of 1	Scale: NTS	Tolerance: +/-0.25"	Dwg Units: in [mm]

No change to this drawing may be made unless approved in writing by Daikin Applied. Purchaser must determine that the equipment is fit and sufficient for the job specifications.

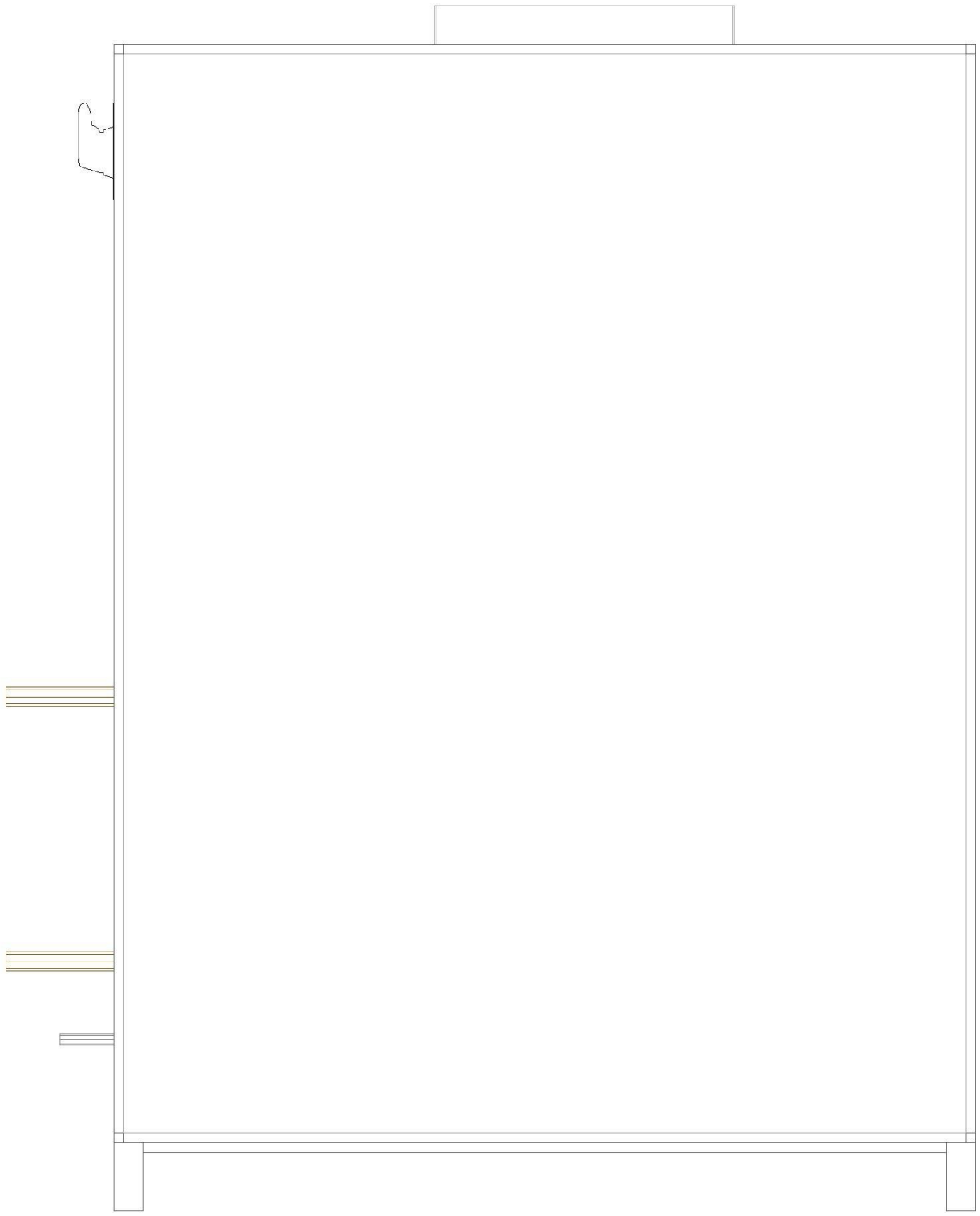

	Unit Tag: AHU-20 - Eiland (RH)			DAIKIN		
Product: PreciseLine® Air Handler	Project Name: Klein ISD Eiland ES AHU			13600 Industrial Park Blvd. Minneapolis, MN 55441		
Model: BCVD0301	Sales Office: HTS Texas			www.DaikinApplied.com Software Version: 07.40		
Sales Engineer:	Jan. 16, 2026	Ver/Rev:	Sheet 1 of 1	Scale: NTS	Tolerance: +/-0.25"	Dwg Units: in [mm]

No change to this drawing may be made unless approved in writing by Daikin Applied. Purchaser must determine that the equipment is fit and sufficient for the job specifications.

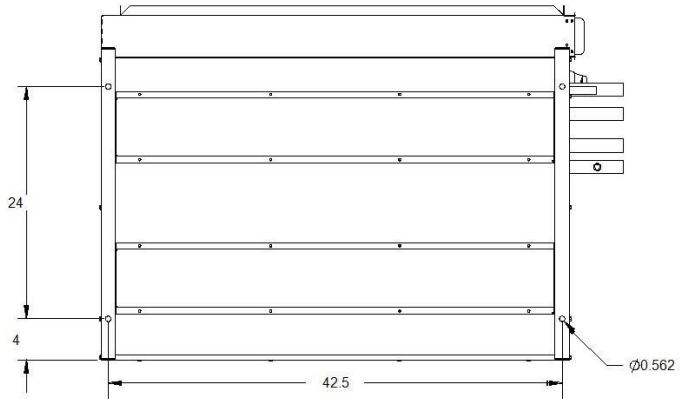

SECTION A-A

CABINET MOUNTING HOLE LOCATIONS

	Unit Tag: AHU-20 - Eiland (RH)			Sales Office: HTS Texas			DAIKIN
Product: PreciseLine® Air Handler	Project Name: Klein ISD Eiland ES AHU			Sales Engineer:			13600 Industrial Park Blvd. Minneapolis, MN 55441
Model: BCVD0301	Jan. 16, 2026	Ver/Rev:	Sheet: 1 of 1	Scale: NTS	Tolerance: +/- 0.25"	Dwg Units: in [mm]	www.DaikinApplied.com Software Version: 07.40

No change to this drawing may be made unless approved in writing by Daikin Applied. Purchaser must determine that the equipment is fit and sufficient for the job specifications.

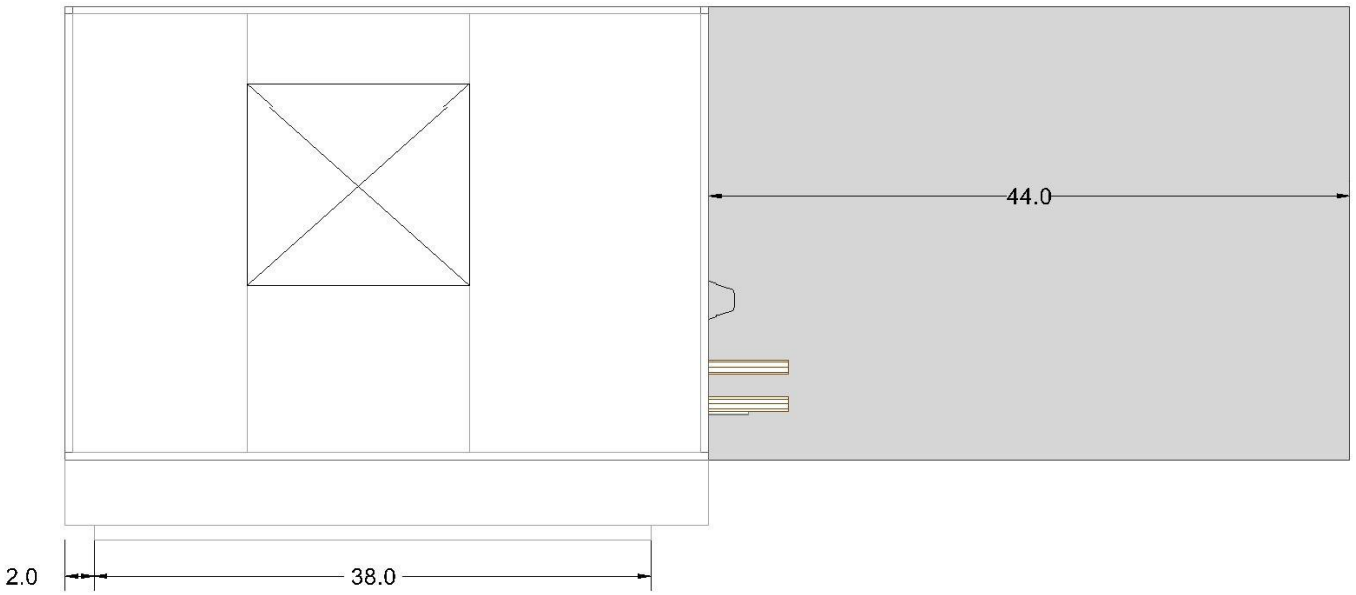

	Unit Tag: AHU-20 - Eiland (RH)			Sales Office: HTS Texas			DAIKIN
Product: PreciseLine® Air Handler	Project Name: Klein ISD Eiland ES AHU			Sales Engineer:			13600 Industrial Park Blvd. Minneapolis, MN 55441
Model: BCVD0301	Jan. 16, 2026	Ver/Rev:	Sheet: 1 of 1	Scale: NTS	Tolerance: +/- 0.25"	Dwg Units: in [mm]	www.DaikinApplied.com Software Version: 07.40

No change to this drawing may be made unless approved in writing by Daikin Applied. Purchaser must determine that the equipment is fit and sufficient for the job specifications.

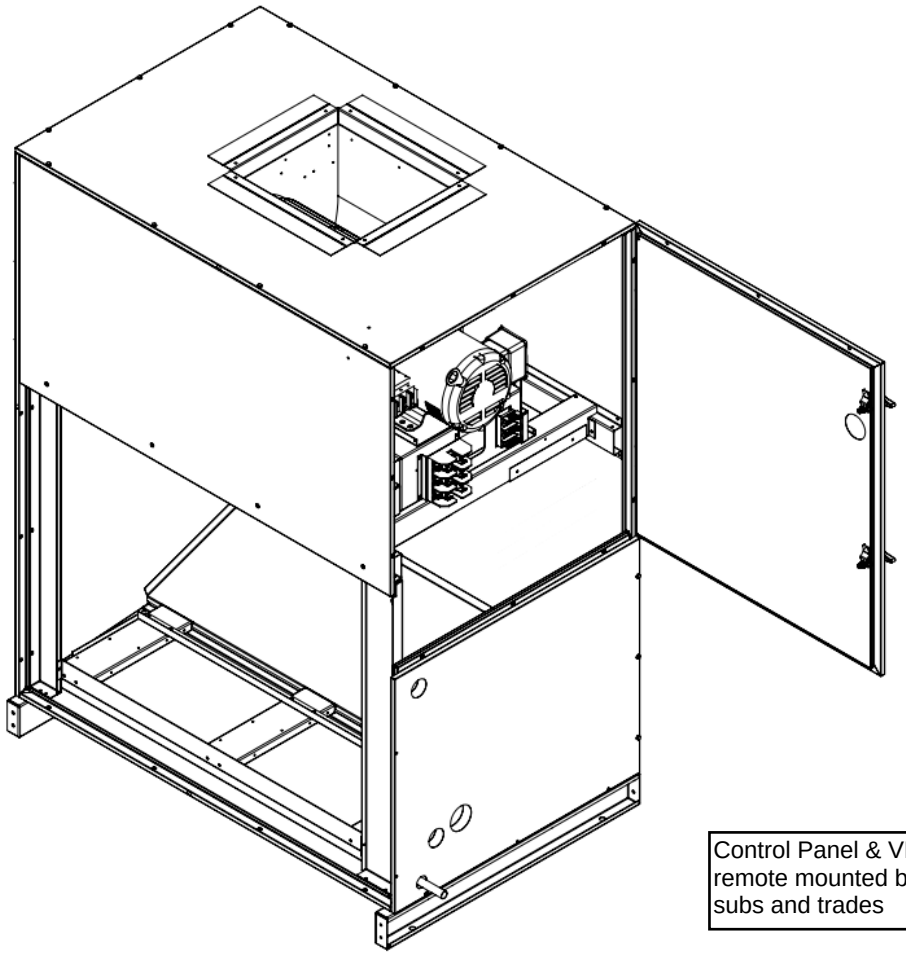

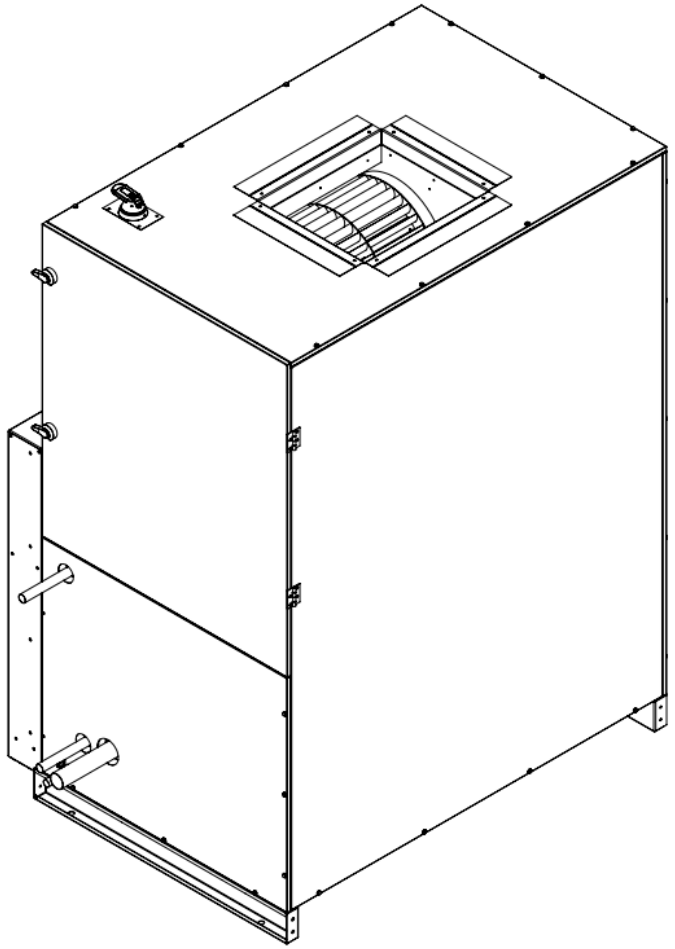

Control Panel & VFD to be remote mounted by Installing subs and trades

	Unit Tag: AHU-20 - Eiland (RH)			Sales Office: HTS Texas			DAIKIN
Product: PreciseLine® Air Handler	Project Name: Klein ISD Eiland ES AHU			Sales Engineer:			13600 Industrial Park Blvd. Minneapolis, MN 55441
Model: BCVD0301	Jan. 16, 2026	Ver/Rev:	Sheet: 1 of 1	Scale: NTS	Tolerance: +/- 0.25"	Dwg Units: in [mm]	www.DaikinApplied.com Software Version: 07.40

No change to this drawing may be made unless approved in writing by Daikin Applied. Purchaser must determine that the equipment is fit and sufficient for the job specifications.

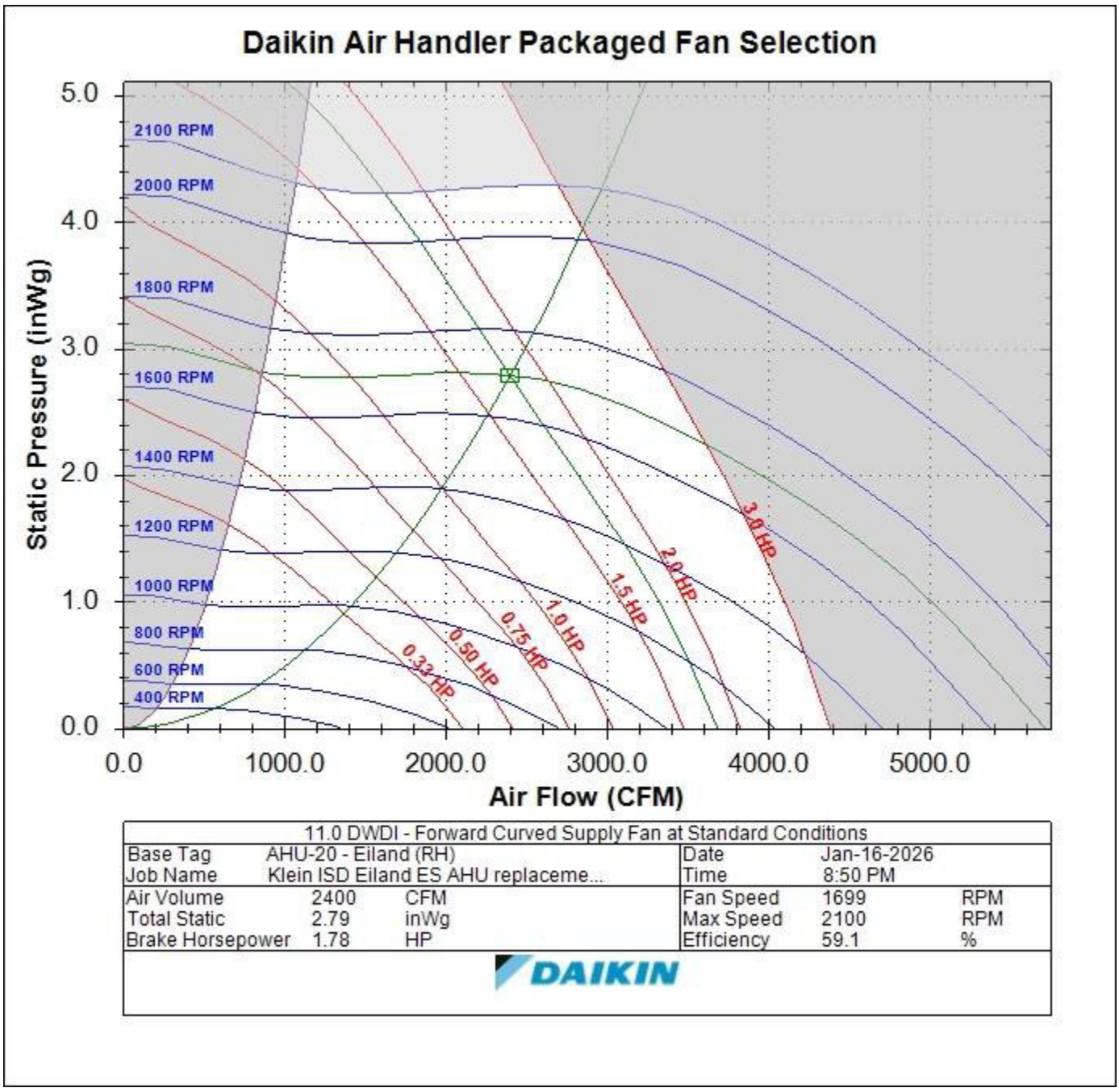

11.0 DWDI - Forward Curved Supply Fan at Standard Conditions					
Base Tag	AHU-20 - Eiland (RH)		Date	Jan-16-2026	
Job Name	Klein ISD Eiland ES AHU replaceme...		Time	8:50 PM	
Air Volume	2400	CFM	Fan Speed	1699	RPM
Total Static	2.79	inWg	Max Speed	2100	RPM
Brake Horsepower	1.78	HP	Efficiency	59.1	%

DAIKIN

Job Information	*Technical Data Sheet*
Job Name	Klein ISD Eiland ES AHU replacements
Date	1/16/2026
Submitted By	Matt McPherson
Software Version	07.40
Unit Tag	AHU-21,23 - Eiland (LH)
FPA#	PL-250152-1



Unit Overview

Model Number	Voltage V/Hz/Phase	Airflow CFM	External Static Pressure inH_2O	Design Cooling Capacity Btu/hr
BCVD0301	460/60/3	2250	1.50	94702

Unit

Model Number:	BCVD0301
Unit Arrangement:	Vertical
Altitude:	0 ft

Physical

Dimensions and Weight (wet)

Length	Height	Width	Weight
31.0 in	61.5 in	44.0 in	402 lb

Construction

Insulation and Liners:	1" Injected Foam, R-6, Galvanized Steel Liner

Electrical

Field Connection	Unit FLA	Unit MCA	Unit MROPD	SCCR
Disconnect Switch	3.8 A	4.7 A	15 A	5 kA

Filter

Filter Access	Filter Depth	MERV Rating	(Quantity) Height x Width x Depth
Side	2 in	MERV 13	(2) 25 x 20

Primary Hydronic Coil

Physical

Fins per Inch	Rows	Casing Material	Face Area ft²	Face Velocity ft/min
12	6	Stainless Steel	6.2	361.2

Connection

Size	Type	Location
1.625	SWT	Left Hand

Drain Pan

Material	Connection
Stainless Steel	0.75 in

Performance

Capacity		Air Temperature			
		Entering		Leaving	
Total Btu/hr	Sensible Btu/hr	Dry Bulb °F	Wet Bulb °F	Dry Bulb °F	Wet Bulb °F
94702	60767	78.0	67.0	53.3	53.3

Fluid

Type	Entering Temperature °F	Leaving Temperature °F	Flow Rate gpm	Pressure Drop ft H_2O
Water	45.0	57.6	15.0	4.26

Supply Fan

Performance

Airflow	Total Static Pressure	Fan Speed	Controller Input Signal	Brake Horsepower	Total Input Power	Fan Energy Index	Altitude
2250	2.72 inH_2O	1675 rpm	9.3 VDC	1.60 HP	1.81 HP	1.295	0 ft

Motor

Type	(Qty) Horsepower	Motor Control	(Qty) FLA
FC Direct Drive NEMA Premium Efficiency Motor	(1) 3.0 HP	0-10V Modulating	(1) 3.8 A

Unit Discharge Conditions

AirTemperature

Motor Heat Btu/hr	Unit Leaving Dry Bulb °F	Unit Leaving Wet Bulb °F	Unit Leaving Dewpoint °F
4845	55.3	53.9	53.0

Supply Fan Total Pressure Drop Calculation

External Static Pressure:	1.50 inH_2O
Primary Filter:	0.26 inH_2O
Dirty/Additional Filter:	0.50 inH_2O
Cooling Coil:	0.46 inH_2O
Total Static Pressure (Supply):	2.72 inH_2O

Sound Power

	Sound Power (db)							
Frequency	**63 Hz**	**125 Hz**	**250 Hz**	**500 Hz**	**1 kHz**	**2 kHz**	**4 kHz**	**8 kHz**
Inlet	85	82	74	71	73	71	69	59
Discharge	93	89	82	79	78	78	75	69
Radiated	74	70	60	55	58	60	45	36

Options

Controls	
Overflow Switch:	Factory mounted Overflow Switch

Warranty

Parts:	1 year extended parts only

AHRI Certification

All equipment is rated and certified in accordance with AHRI 430.

Notes

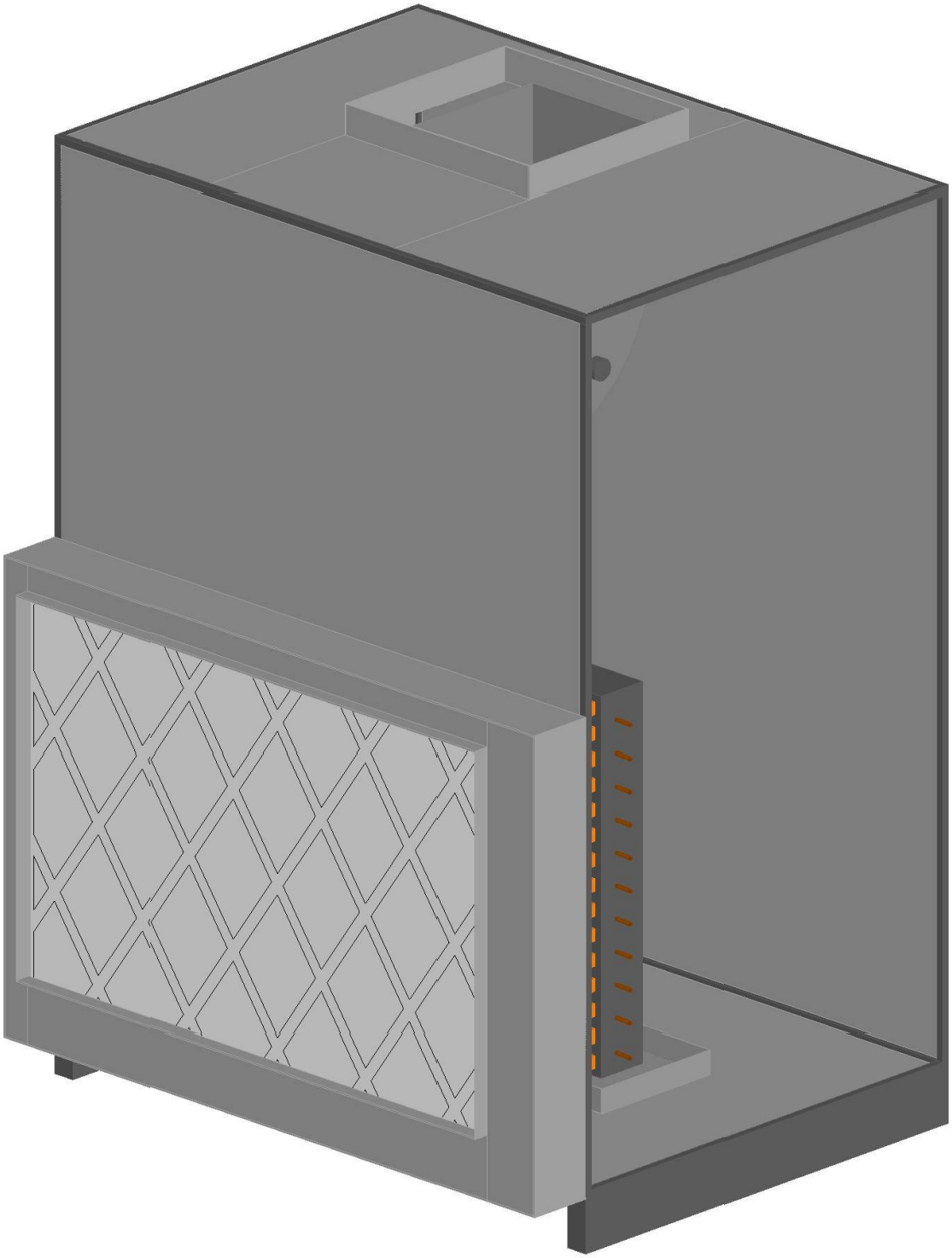

	Unit Tag: AHU-21,23 - Eiland (LH)			DAIKIN		
Product: PreciseLine® Air Handler	Project Name: Klein ISD Eiland ES AHU			13600 Industrial Park Blvd. Minneapolis, MN 55441		
Model: BCVD0301	Sales Office: HTS Texas			www.DaikinApplied.com Software Version: 07.40		
Sales Engineer:	Jan. 16, 2026	Ver/Rev:	Sheet 1 of 1	Scale: NTS	Tolerance: +/-0.25"	Dwg Units: in [mm]

No change to this drawing may be made unless approved in writing by Daikin Applied. Purchaser must determine that the equipment is fit and sufficient for the job specifications.

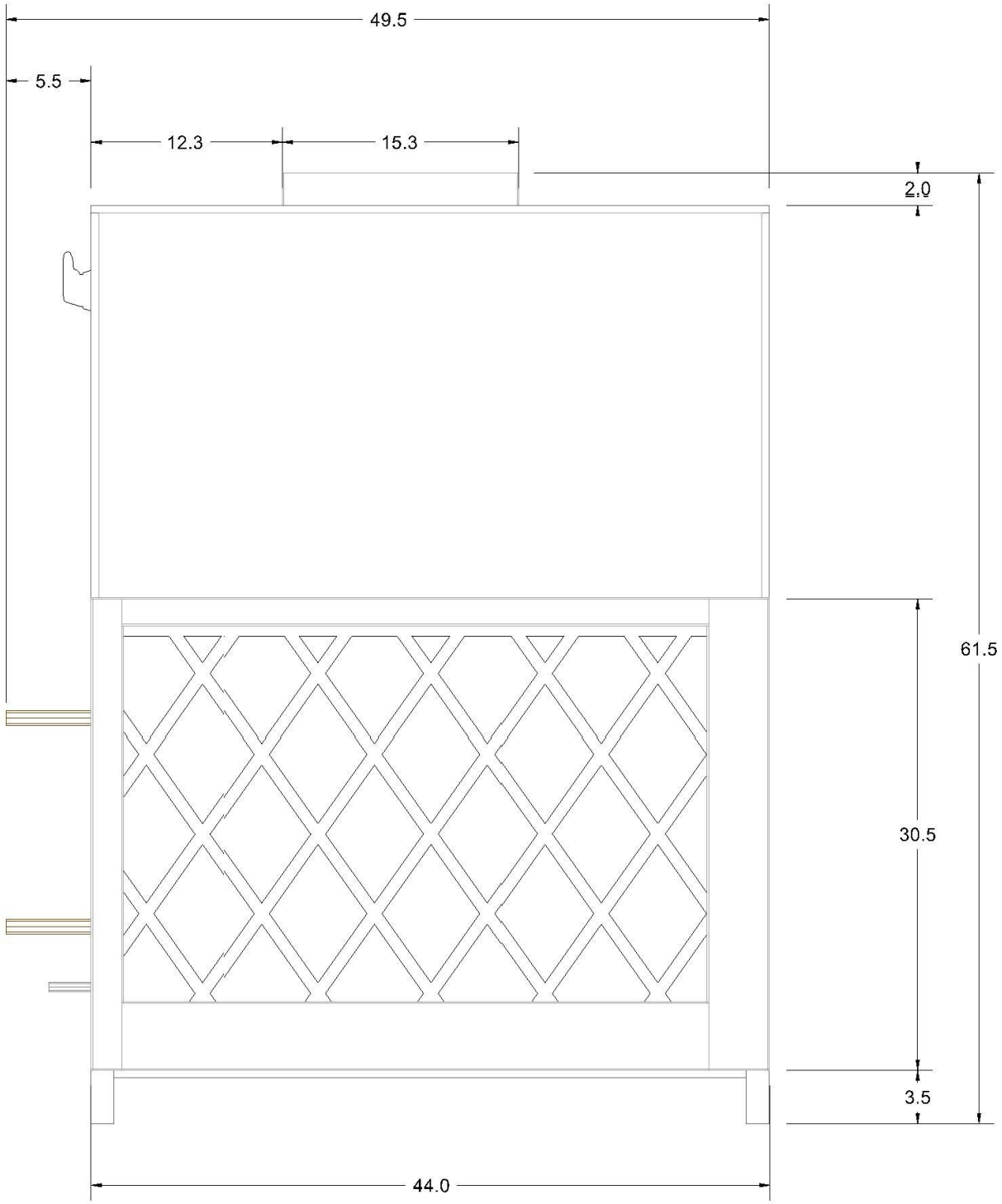

	Unit Tag: AHU-21,23 - Eiland (LH)			DAIKIN		
Product: PreciseLine® Air Handler	Project Name: Klein ISD Eiland ES AHU			13600 Industrial Park Blvd. Minneapolis, MN 55441		
Model: BCVD0301	Sales Office: HTS Texas			www.DaikinApplied.com	Software Version: 07.40	
Sales Engineer:	Jan. 16, 2026	Ver/Rev:	Sheet 1 of 1	Scale: NTS	Tolerance: +/-0.25"	Dwg Units: in [mm]

No change to this drawing may be made unless approved in writing by Daikin Applied. Purchaser must determine that the equipment is fit and sufficient for the job specifications.

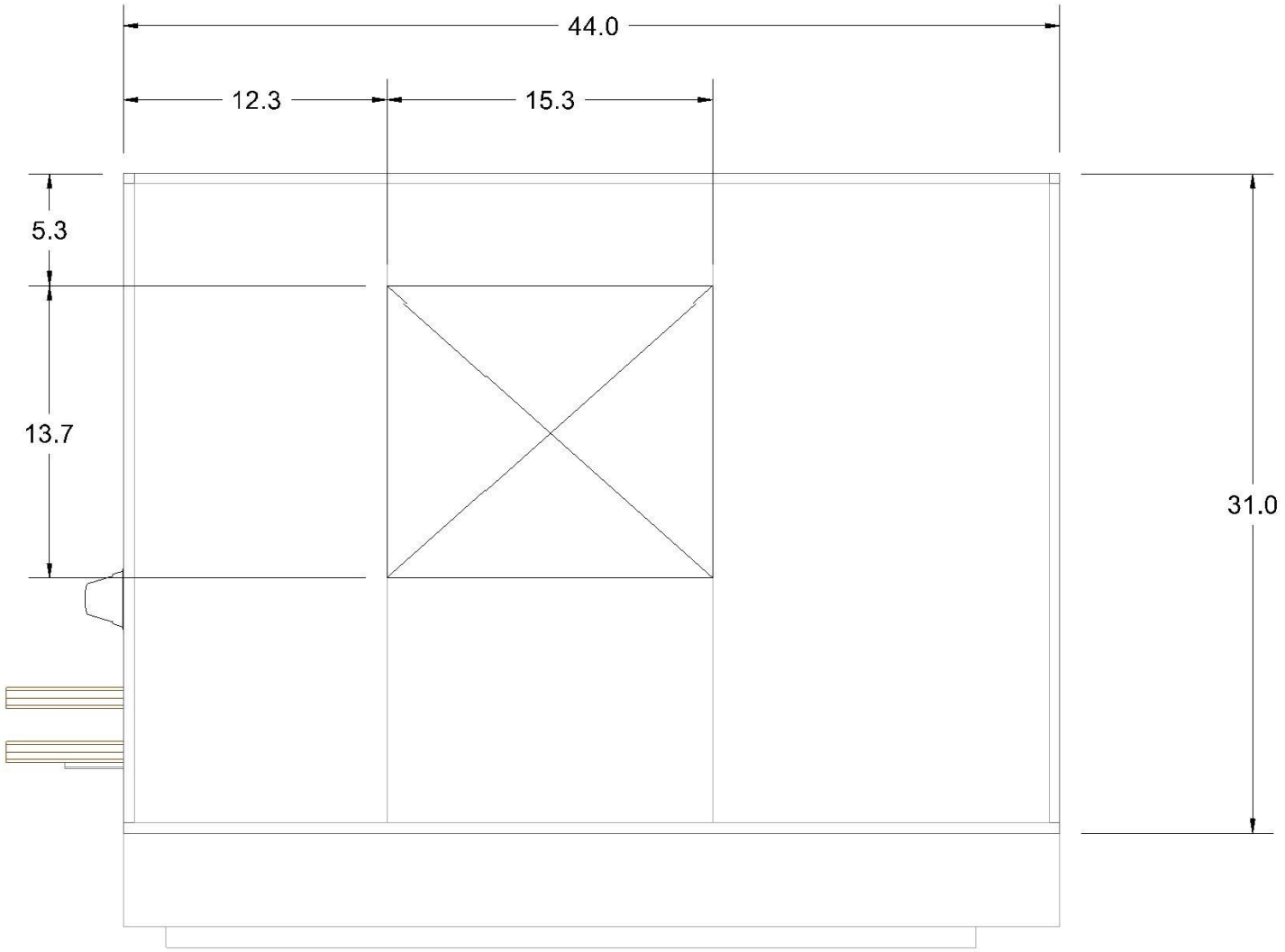

	Unit Tag: AHU-21,23 - Eiland (LH)			Sales Office: HTS Texas			DAIKIN
Product: PreciseLine® Air Handler	Project Name: Klein ISD Eiland ES AHU			Sales Engineer:			13600 Industrial Park Blvd. Minneapolis, MN 55441
Model: BCVD0301	Jan. 16, 2026	Ver/Rev:	Sheet: 1 of 1	Scale: NTS	Tolerance: +/- 0.25"	Dwg Units: in [mm]	www.DaikinApplied.com Software Version: 07.40

No change to this drawing may be made unless approved in writing by Daikin Applied. Purchaser must determine that the equipment is fit and sufficient for the job specifications.

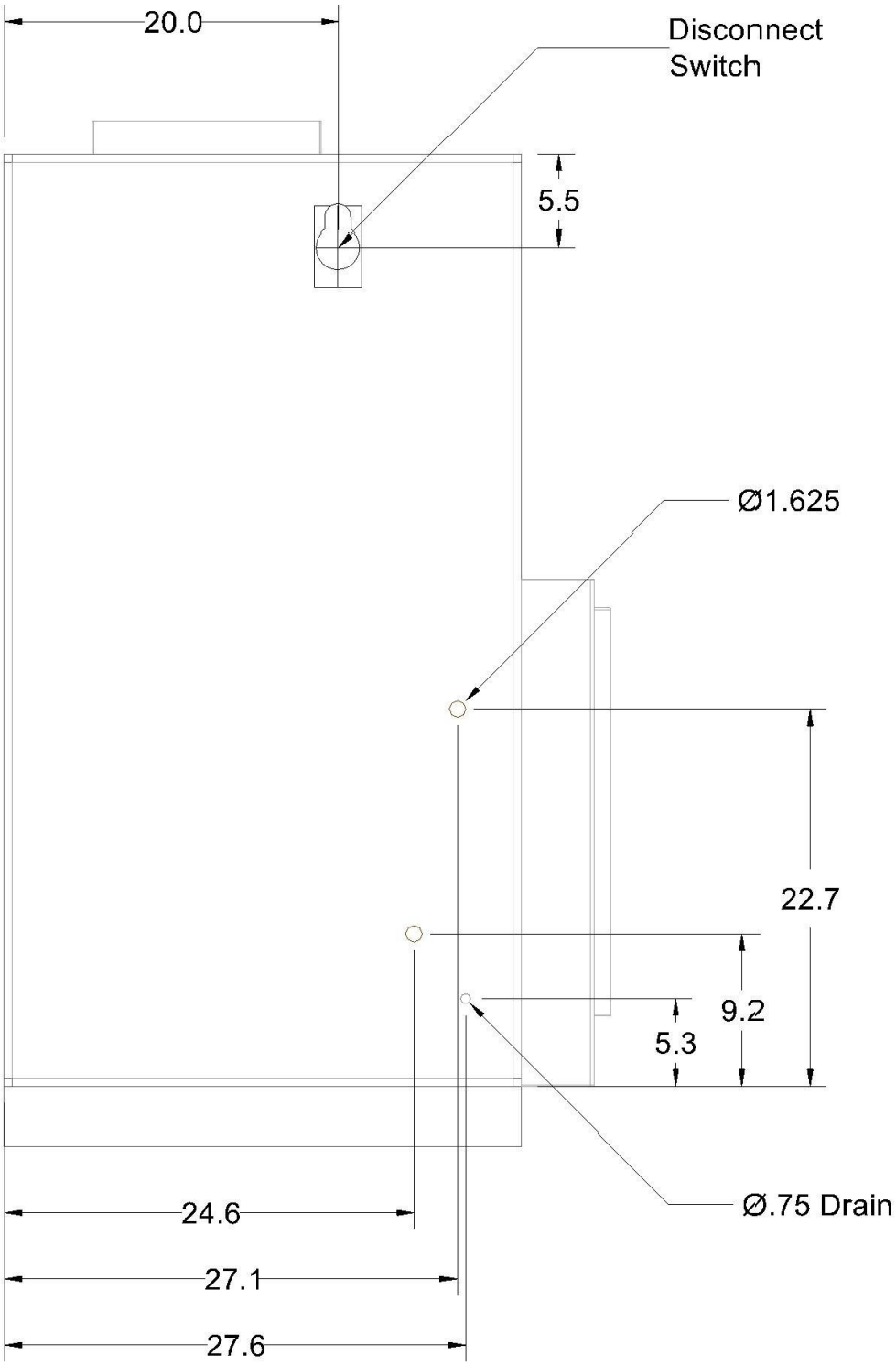

	Unit Tag: AHU-21,23 - Eiland (LH)			DAIKIN		
Product: PreciseLine® Air Handler	Project Name: Klein ISD Eiland ES AHU			13600 Industrial Park Blvd. Minneapolis, MN 55441		
Model: BCVD0301	Sales Office: HTS Texas			www.DaikinApplied.com	Software Version: 07.40	
Sales Engineer:	Jan. 16, 2026	Ver/Rev:	Sheet 1 of 1	Scale: NTS	Tolerance: +/-0.25"	Dwg Units: in [mm]

No change to this drawing may be made unless approved in writing by Daikin Applied. Purchaser must determine that the equipment is fit and sufficient for the job specifications.

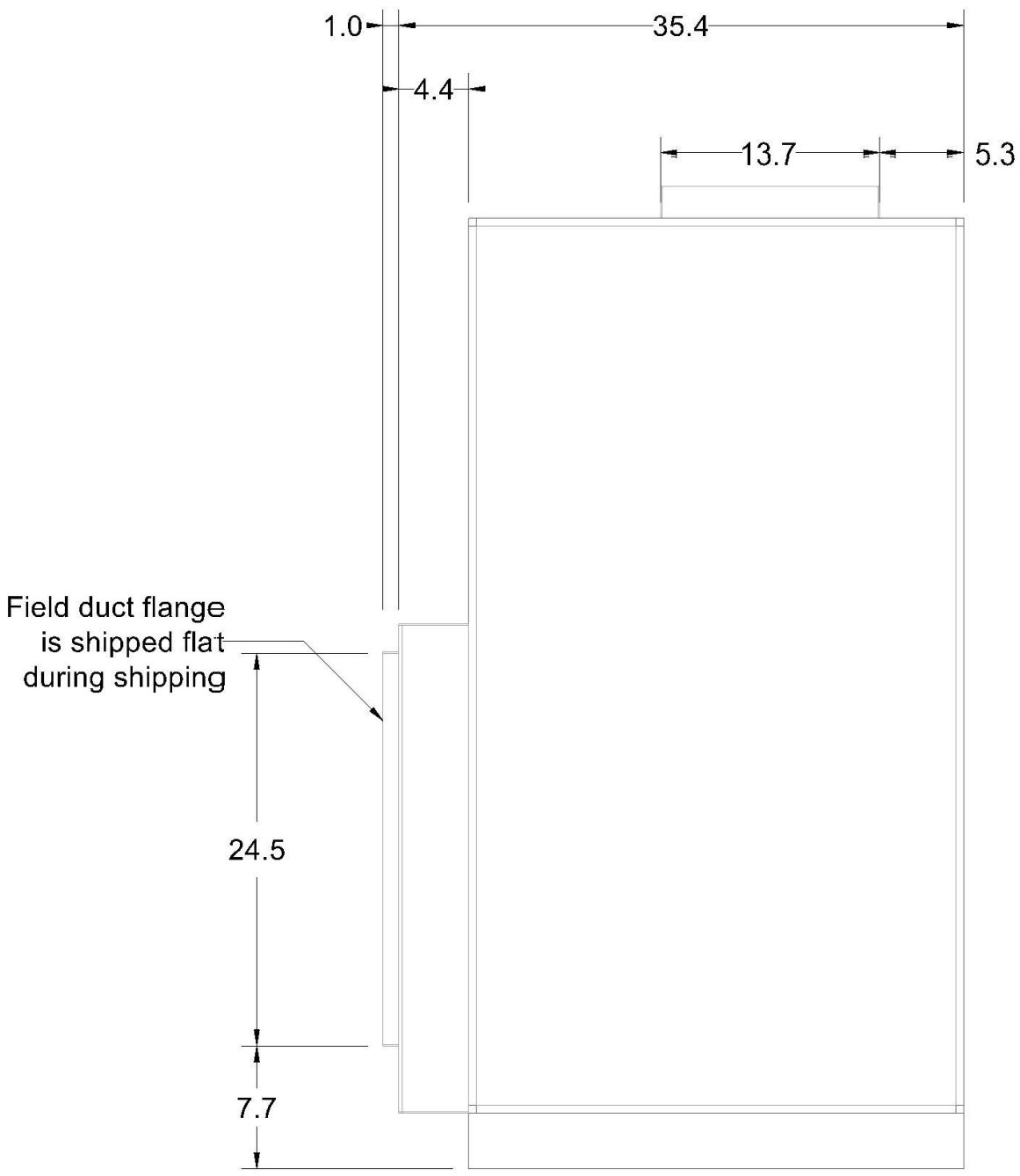

	Unit Tag: AHU-21,23 - Eiland (LH)			DAIKIN		
Product: PreciseLine® Air Handler	Project Name: Klein ISD Eiland ES AHU			13600 Industrial Park Blvd. Minneapolis, MN 55441		
Model: BCVD0301	Sales Office: HTS Texas			www.DaikinApplied.com	Software Version: 07.40	
Sales Engineer:	Jan. 16, 2026	Ver/Rev:	Sheet 1 of 1	Scale: NTS	Tolerance: +/-0.25"	Dwg Units: in [mm]

No change to this drawing may be made unless approved in writing by Daikin Applied. Purchaser must determine that the equipment is fit and sufficient for the job specifications.

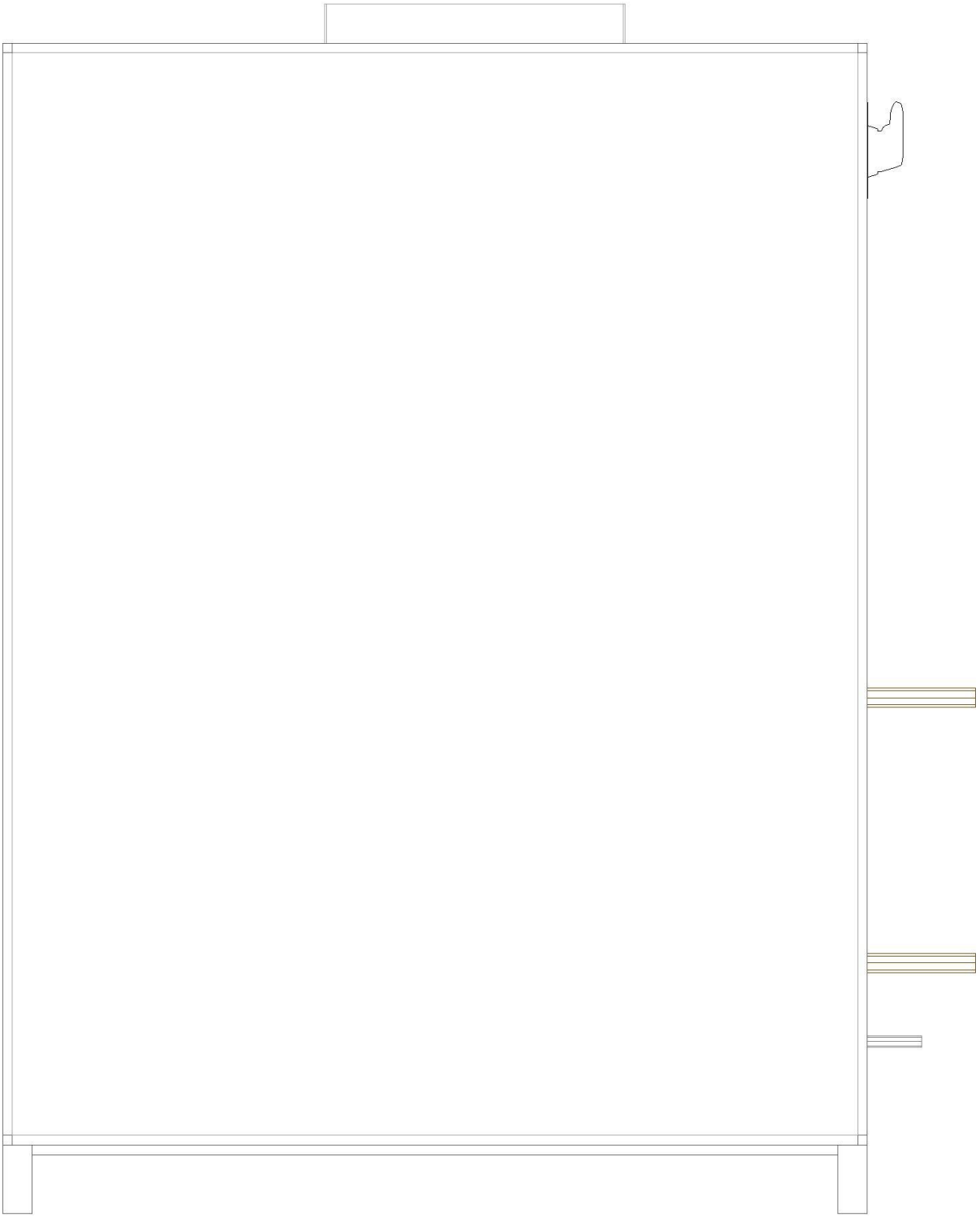

	Unit Tag: AHU-21,23 - Eiland (LH)			DAIKIN		
Product: PreciseLine® Air Handler	Project Name: Klein ISD Eiland ES AHU			13600 Industrial Park Blvd. Minneapolis, MN 55441		
Model: BCVD0301	Sales Office: HTS Texas			www.DaikinApplied.com	Software Version: 07.40	
Sales Engineer:	Jan. 16, 2026	Ver/Rev:	Sheet 1 of 1	Scale: NTS	Tolerance: +/-0.25"	Dwg Units: in [mm]

No change to this drawing may be made unless approved in writing by Daikin Applied. Purchaser must determine that the equipment is fit and sufficient for the job specifications.

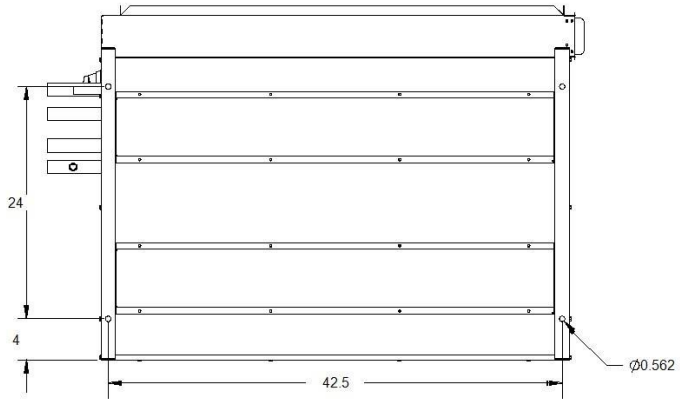

SECTION A-A

CABINET MOUNTING HOLE LOCATIONS

	Unit Tag: AHU-21,23 - Eiland (LH)			Sales Office: HTS Texas			DAIKIN
Product: PreciseLine® Air Handler	Project Name: Klein ISD Eiland ES AHU			Sales Engineer:			13600 Industrial Park Blvd. Minneapolis, MN 55441
Model: BCVD0301	Jan. 16, 2026	Ver/Rev:	Sheet: 1 of 1	Scale: NTS	Tolerance: +/- 0.25"	Dwg Units: in [mm]	www.DaikinApplied.com Software Version: 07.40

No change to this drawing may be made unless approved in writing by Daikin Applied. Purchaser must determine that the equipment is fit and sufficient for the job specifications.

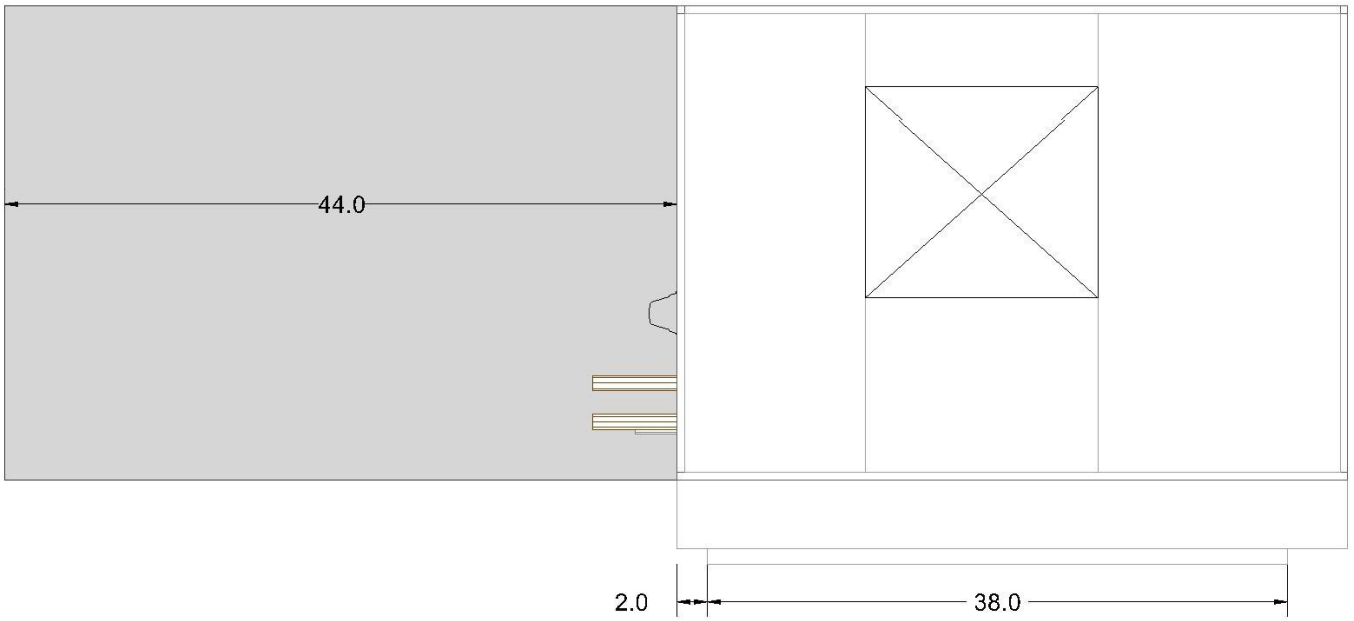

	Unit Tag: AHU-21,23 - Eiland (LH)			Sales Office: HTS Texas			DAIKIN
Product: PreciseLine® Air Handler	Project Name: Klein ISD Eiland ES AHU			Sales Engineer:			13600 Industrial Park Blvd. Minneapolis, MN 55441
Model: BCVD0301	Jan. 16, 2026	Ver/Rev:	Sheet: 1 of 1	Scale: NTS	Tolerance: +/- 0.25"	Dwg Units: in [mm]	www.DaikinApplied.com Software Version: 07.40

No change to this drawing may be made unless approved in writing by Daikin Applied. Purchaser must determine that the equipment is fit and sufficient for the job specifications.

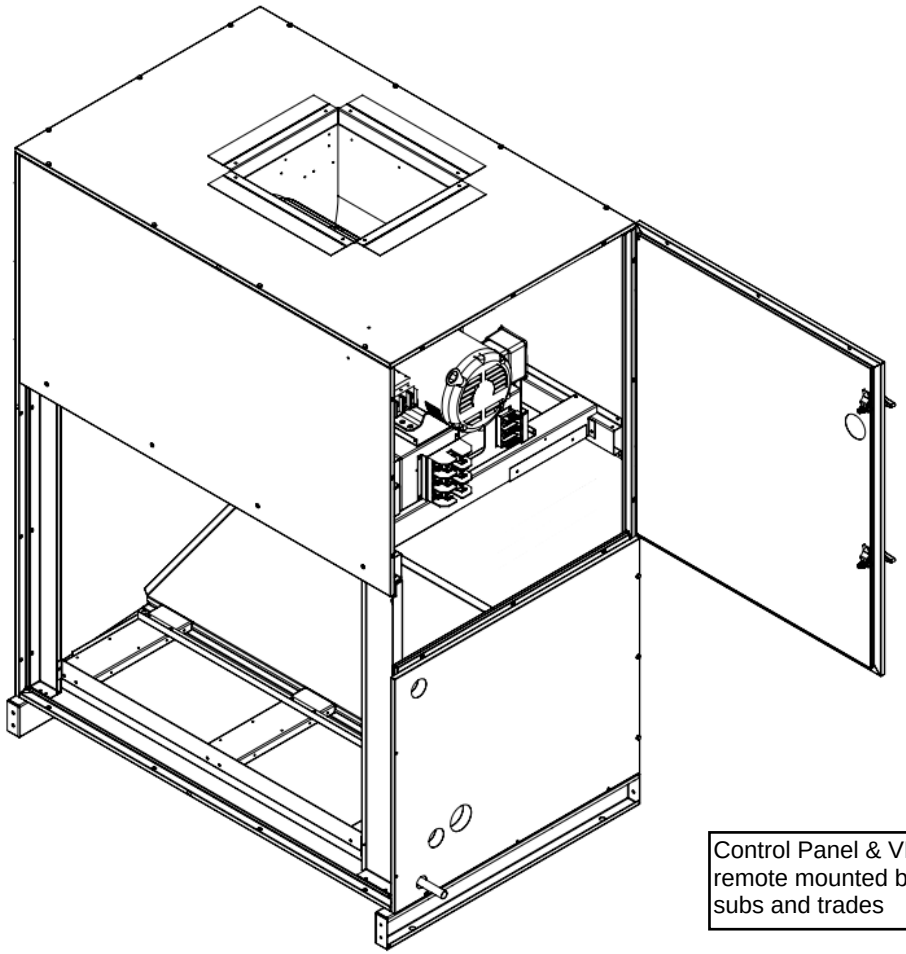

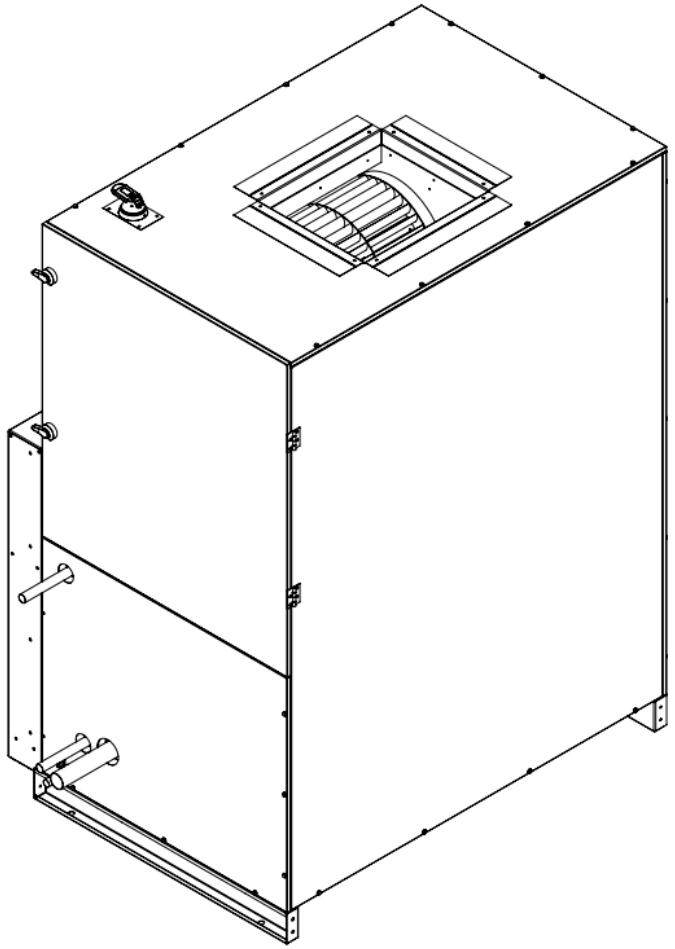

Control Panel & VFD to be remote mounted by Installing subs and trades

	Unit Tag: AHU-21,23 - Eiland (LH)			Sales Office: HTS Texas			DAIKIN
Product: PreciseLine® Air Handler	Project Name: Klein ISD Eiland ES AHU			Sales Engineer:			13600 Industrial Park Blvd. Minneapolis, MN 55441
Model: BCVD0301	Jan. 16, 2026	Ver/Rev:	Sheet: 1 of 1	Scale: NTS	Tolerance: +/- 0.25"	Dwg Units: in [mm]	www.DaikinApplied.com Software Version: 07.40

No change to this drawing may be made unless approved in writing by Daikin Applied. Purchaser must determine that the equipment is fit and sufficient for the job specifications.

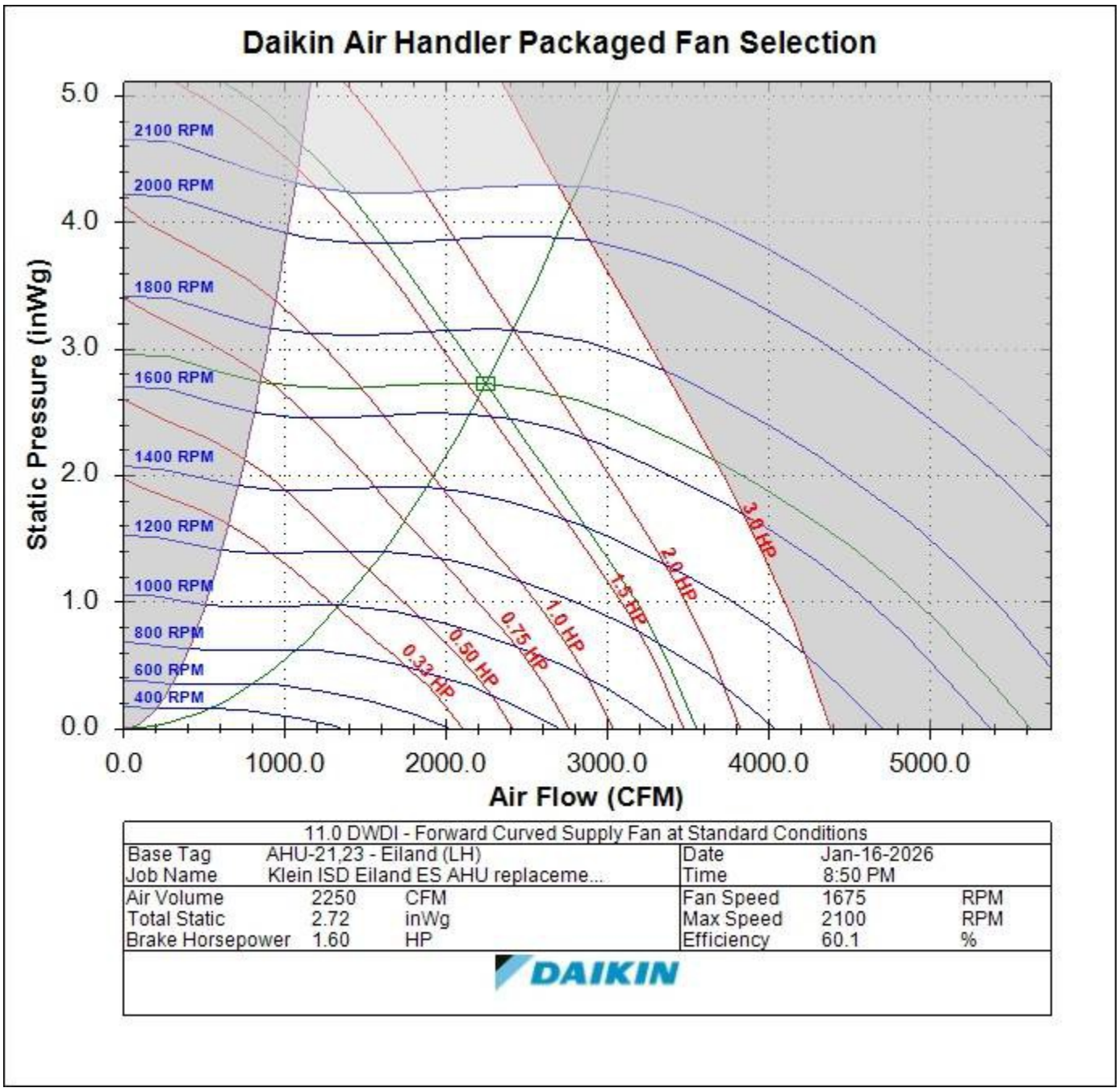

11.0 DWDI - Forward Curved Supply Fan at Standard Conditions					
Base Tag	AHU-21,23 - Eiland (LH)		Date	Jan-16-2026	
Job Name	Klein ISD Eiland ES AHU replaceme...		Time	8:50 PM	
Air Volume	2250	CFM	Fan Speed	1675	RPM
Total Static	2.72	inWg	Max Speed	2100	RPM
Brake Horsepower	1.60	HP	Efficiency	60.1	%

DAIKIN

Job Information	*Technical Data Sheet*
Job Name	Klein ISD Eiland ES AHU replacements
Date	1/16/2026
Submitted By	Matt McPherson
Software Version	07.40
Unit Tag	AHU-22 - Eiland (RH)
FPA#	PL-250152-1



Unit Overview

Model Number	Voltage V/Hz/Phase	Airflow CFM	External Static Pressure inH_2O	Design Cooling Capacity Btu/hr
BCVD0301	460/60/3	2520	1.50	102941

Unit

Model Number:	BCVD0301
Unit Arrangement:	Vertical
Altitude:	0 ft

Physical

Dimensions and Weight (wet)

Length	Height	Width	Weight
31.0 in	61.5 in	44.0 in	402 lb

Construction

Insulation and Liners:	1" Injected Foam, R-6, Galvanized Steel Liner

Electrical

Field Connection	Unit FLA	Unit MCA	Unit MROPD	SCCR
Disconnect Switch	3.8 A	4.7 A	15 A	5 kA

Filter

Filter Access	Filter Depth	MERV Rating	(Quantity) Height x Width x Depth
Side	2 in	MERV 13	(2) 25 x 20

Primary Hydronic Coil

Physical

Fins per Inch	Rows	Casing Material	Face Area ft²	Face Velocity ft/min
14	6	Stainless Steel	6.2	404.5

Connection

Size	Type	Location
1.625	SWT	Right Hand

Drain Pan

Material	Connection
Stainless Steel	0.75 in

Performance

Capacity		Air Temperature			
		Entering		Leaving	
Total Btu/hr	Sensible Btu/hr	Dry Bulb °F	Wet Bulb °F	Dry Bulb °F	Wet Bulb °F
102941	66826	78.0	67.0	53.7	53.7

Fluid

Type	Entering Temperature °F	Leaving Temperature °F	Flow Rate gpm	Pressure Drop ft H_2O
Water	45.0	58.7	15.0	4.23

Supply Fan

Performance

Airflow	Total Static Pressure	Fan Speed	Controller Input Signal	Brake Horsepower	Total Input Power	Fan Energy Index	Altitude
2520	2.94 inH_2O	1747 rpm	9.7 VDC	1.99 HP	2.23 HP	1.243	0 ft

Motor

Type	(Qty) Horsepower	Motor Control	(Qty) FLA
FC Direct Drive NEMA Premium Efficiency Motor	(1) 3.0 HP	0-10V Modulating	(1) 3.8 A

Unit Discharge Conditions

AirTemperature

Motor Heat Btu/hr	Unit Leaving Dry Bulb °F	Unit Leaving Wet Bulb °F	Unit Leaving Dewpoint °F
5818	55.9	54.4	53.4

Supply Fan Total Pressure Drop Calculation

External Static Pressure:	1.50 inH_2O
Primary Filter:	0.30 inH_2O
Dirty/Additional Filter:	0.50 inH_2O
Cooling Coil:	0.64 inH_2O
Total Static Pressure (Supply):	2.94 inH_2O

Sound Power

	Sound Power (db)							
Frequency	**63 Hz**	**125 Hz**	**250 Hz**	**500 Hz**	**1 kHz**	**2 kHz**	**4 kHz**	**8 kHz**
Inlet	87	84	75	72	73	70	67	53
Discharge	95	90	83	81	80	80	77	71
Radiated	75	71	61	56	59	62	47	37

Options

Controls	
Overflow Switch:	Factory mounted Overflow Switch

Warranty

Parts:	1 year extended parts only

AHRI Certification

All equipment is rated and certified in accordance with AHRI 430.

Notes

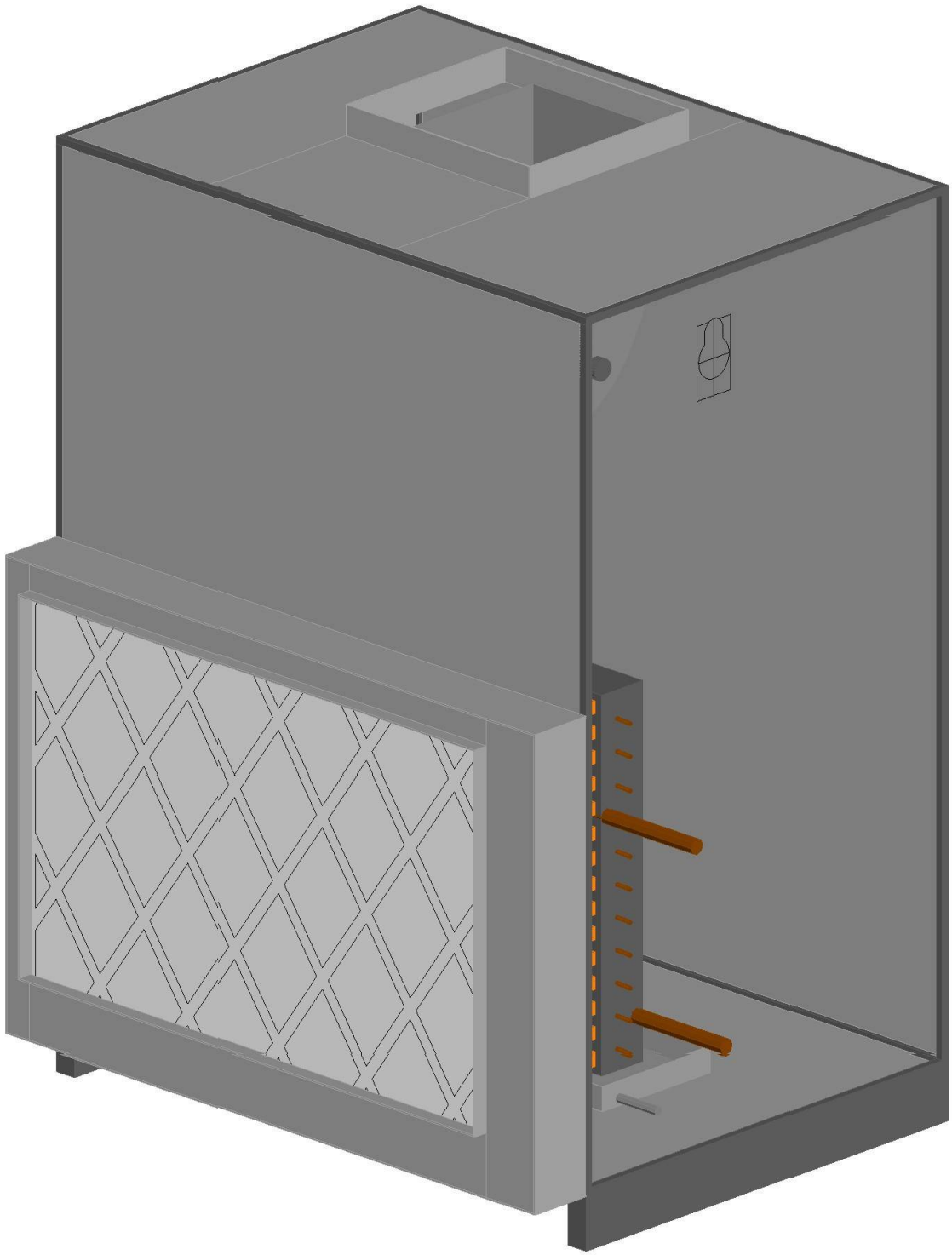

	Unit Tag: AHU-22 - Eiland (RH)			DAIKIN		
Product: PreciseLine® Air Handler	Project Name: Klein ISD Eiland ES AHU			13600 Industrial Park Blvd. Minneapolis, MN 55441		
Model: BCVD0301	Sales Office: HTS Texas			www.DaikinApplied.com Software Version: 07.40		
Sales Engineer:	Jan. 16, 2026	Ver/Rev:	Sheet 1 of 1	Scale: NTS	Tolerance: +/-0.25"	Dwg Units: in [mm]

No change to this drawing may be made unless approved in writing by Daikin Applied. Purchaser must determine that the equipment is fit and sufficient for the job specifications.

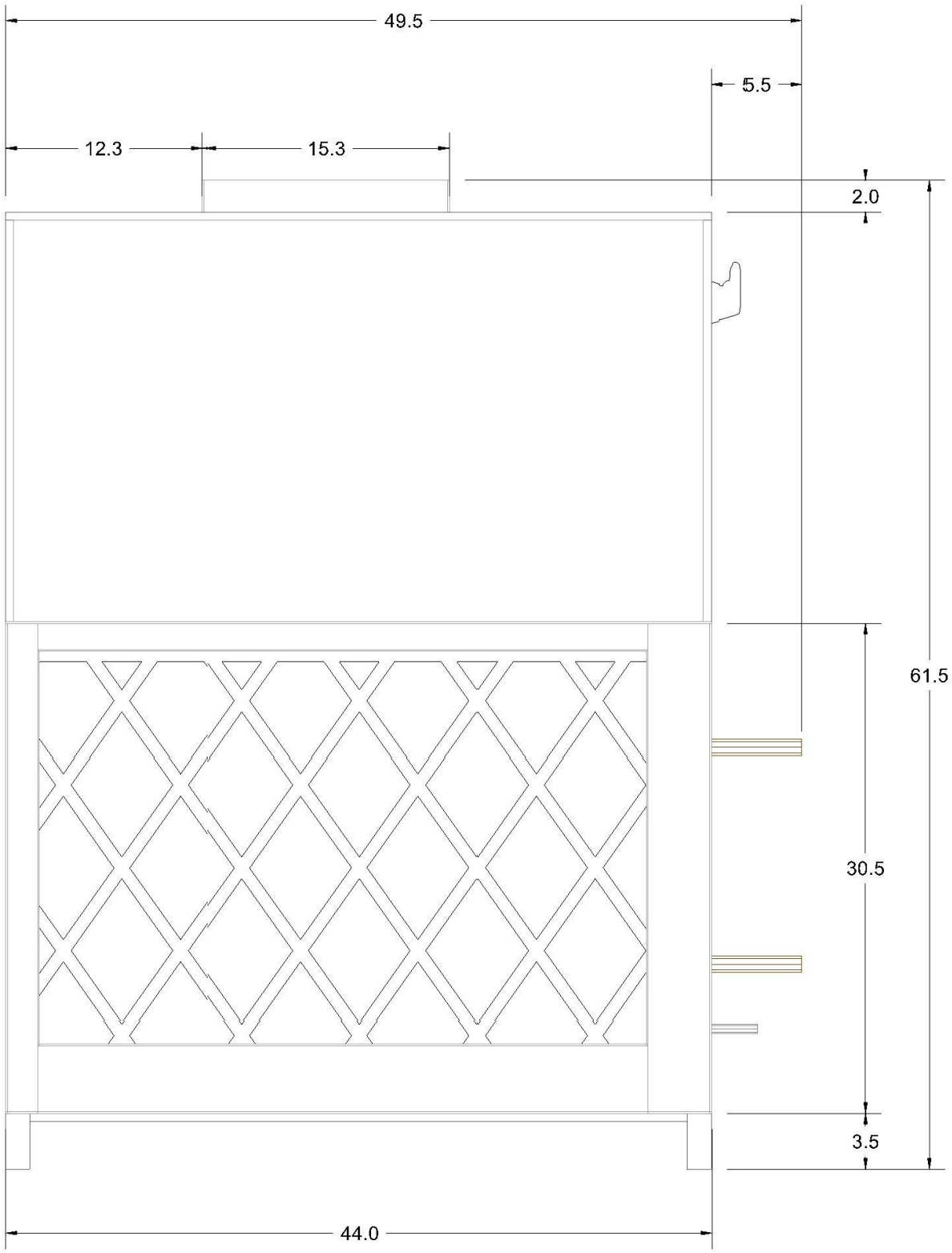

	Unit Tag: AHU-22 - Eiland (RH)			DAIKIN		
Product: PreciseLine® Air Handler	Project Name: Klein ISD Eiland ES AHU			13600 Industrial Park Blvd. Minneapolis, MN 55441		
Model: BCVD0301	Sales Office: HTS Texas			www.DaikinApplied.com	Software Version: 07.40	
Sales Engineer:	Jan. 16, 2026	Ver/Rev:	Sheet 1 of 1	Scale: NTS	Tolerance: +/-0.25"	Dwg Units: in [mm]

No change to this drawing may be made unless approved in writing by Daikin Applied. Purchaser must determine that the equipment is fit and sufficient for the job specifications.

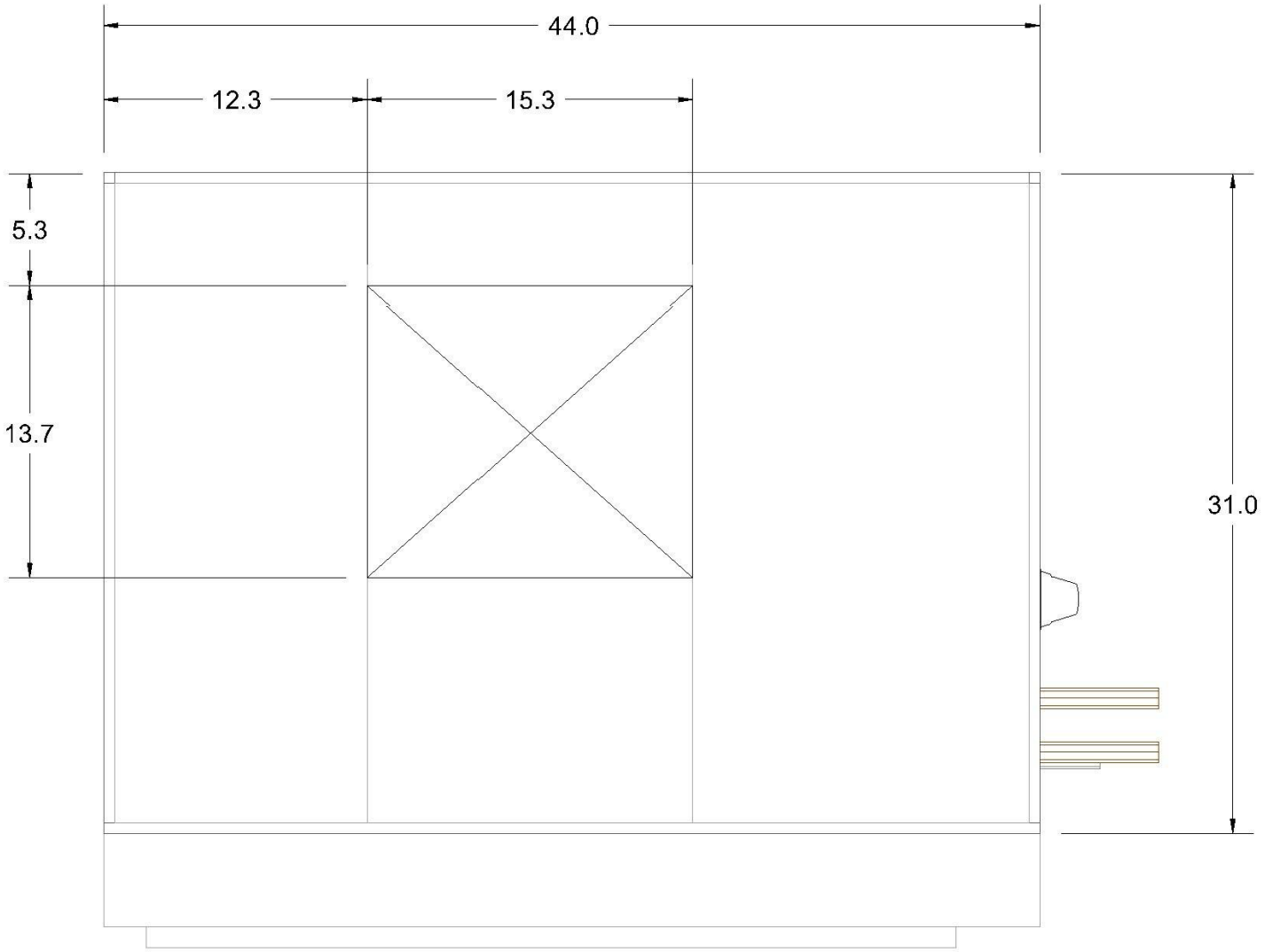

	Unit Tag: AHU-22 - Eiland (RH)			Sales Office: HTS Texas			DAIKIN
Product: PreciseLine® Air Handler	Project Name: Klein ISD Eiland ES AHU			Sales Engineer:			13600 Industrial Park Blvd. Minneapolis, MN 55441
Model: BCVD0301	Jan. 16, 2026	Ver/Rev:	Sheet: 1 of 1	Scale: NTS	Tolerance: +/- 0.25"	Dwg Units: in [mm]	www.DaikinApplied.com Software Version: 07.40

No change to this drawing may be made unless approved in writing by Daikin Applied. Purchaser must determine that the equipment is fit and sufficient for the job specifications.

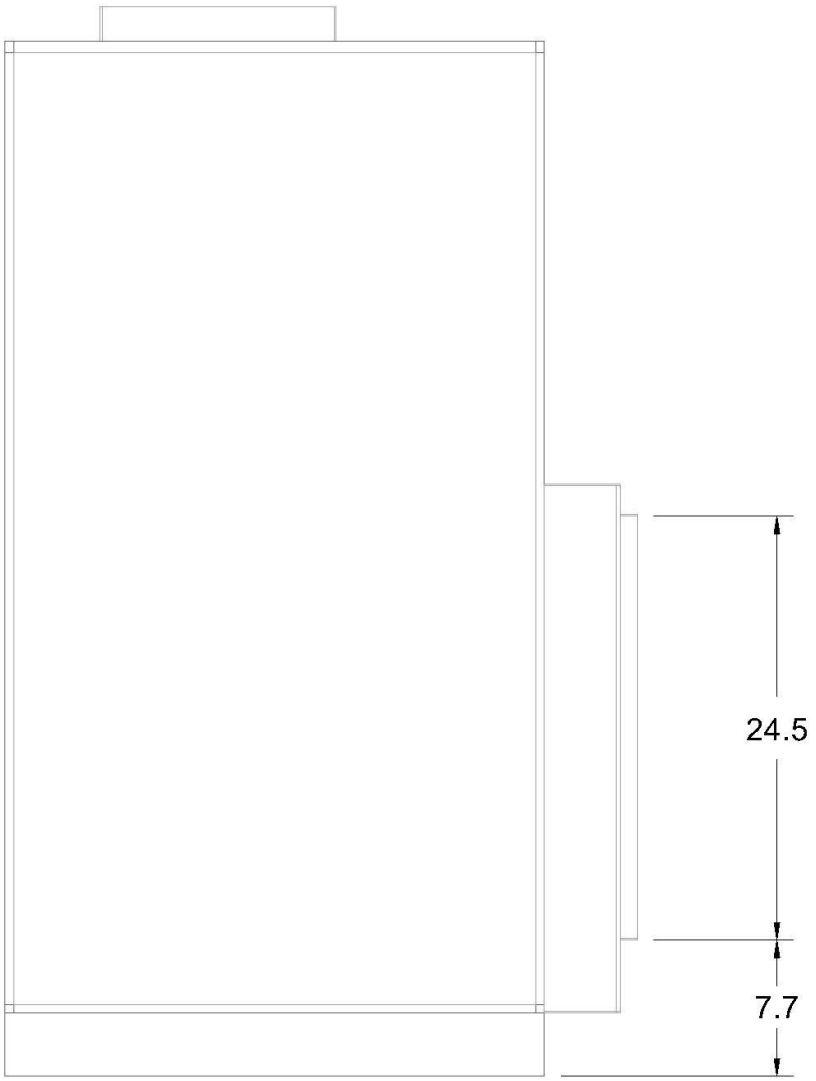

	Unit Tag: AHU-22 - Eiland (RH)			DAIKIN		
Product: PreciseLine® Air Handler	Project Name: Klein ISD Eiland ES AHU			13600 Industrial Park Blvd. Minneapolis, MN 55441		
Model: BCVD0301	Sales Office: HTS Texas			www.DaikinApplied.com Software Version: 07.40		
Sales Engineer:	Jan. 16, 2026	Ver/Rev:	Sheet 1 of 1	Scale: NTS	Tolerance: +/-0.25"	Dwg Units: in [mm]

No change to this drawing may be made unless approved in writing by Daikin Applied. Purchaser must determine that the equipment is fit and sufficient for the job specifications.

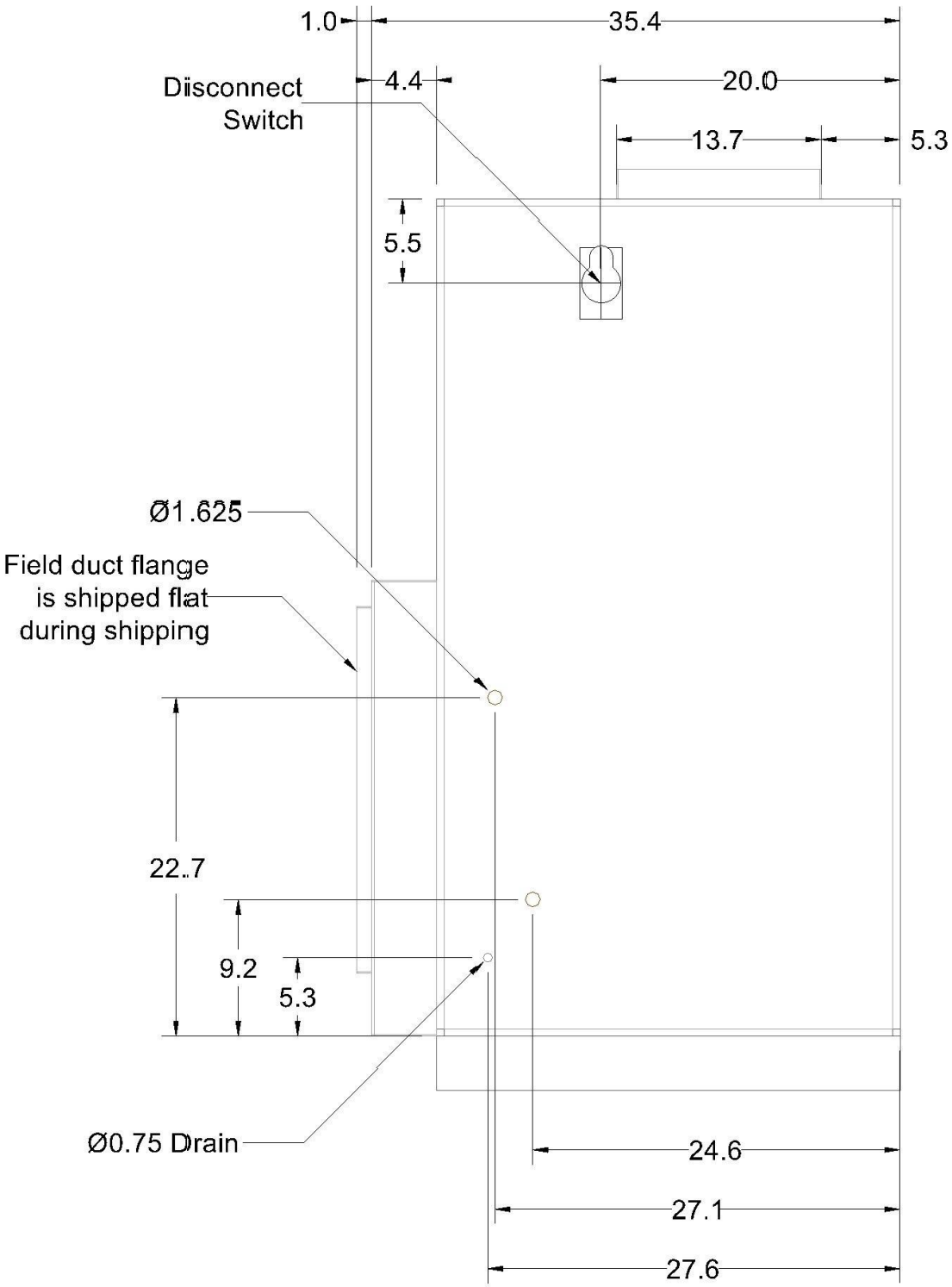

	Unit Tag: AHU-22 - Eiland (RH)			DAIKIN		
Product: PreciseLine® Air Handler	Project Name: Klein ISD Eiland ES AHU			13600 Industrial Park Blvd. Minneapolis, MN 55441		
Model: BCVD0301	Sales Office: HTS Texas			www.DaikinApplied.com	Software Version: 07.40	
Sales Engineer:	Jan. 16, 2026	Ver/Rev:	Sheet 1 of 1	Scale: NTS	Tolerance: +/-0.25"	Dwg Units: in [mm]

No change to this drawing may be made unless approved in writing by Daikin Applied. Purchaser must determine that the equipment is fit and sufficient for the job specifications.

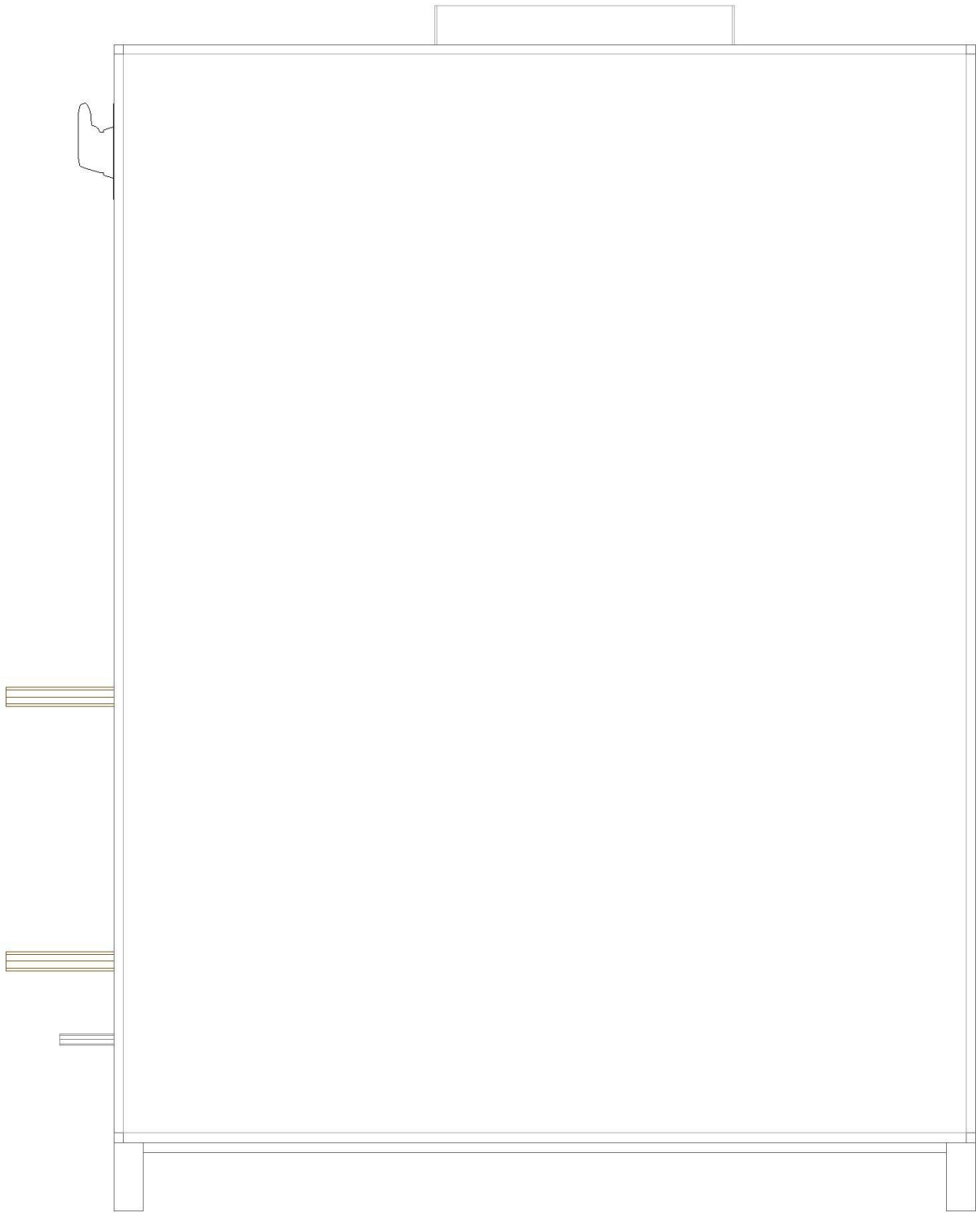

	Unit Tag: AHU-22 - Eiland (RH)			DAIKIN		
Product: PreciseLine® Air Handler	Project Name: Klein ISD Eiland ES AHU			13600 Industrial Park Blvd. Minneapolis, MN 55441		
Model: BCVD0301	Sales Office: HTS Texas			www.DaikinApplied.com Software Version: 07.40		
Sales Engineer:	Jan. 16, 2026	Ver/Rev:	Sheet 1 of 1	Scale: NTS	Tolerance: +/-0.25"	Dwg Units: in [mm]

No change to this drawing may be made unless approved in writing by Daikin Applied. Purchaser must determine that the equipment is fit and sufficient for the job specifications.

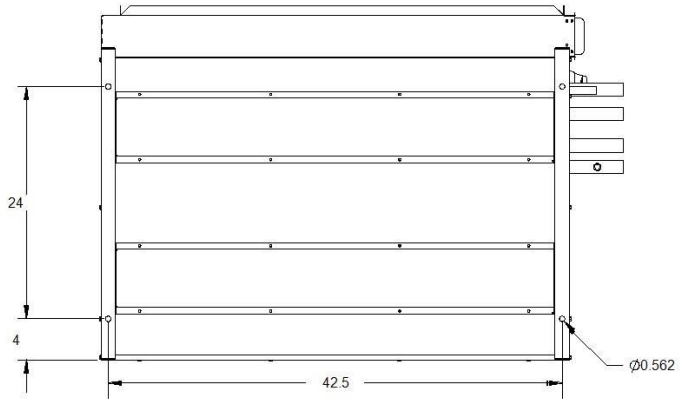

SECTION A-A

CABINET MOUNTING HOLE LOCATIONS

	Unit Tag: AHU-22 - Eiland (RH)			Sales Office: HTS Texas			DAIKIN
Product: PreciseLine® Air Handler	Project Name: Klein ISD Eiland ES AHU			Sales Engineer:			13600 Industrial Park Blvd. Minneapolis, MN 55441
Model: BCVD0301	Jan. 16, 2026	Ver/Rev:	Sheet: 1 of 1	Scale: NTS	Tolerance: +/- 0.25"	Dwg Units: in [mm]	www.DaikinApplied.com Software Version: 07.40

No change to this drawing may be made unless approved in writing by Daikin Applied. Purchaser must determine that the equipment is fit and sufficient for the job specifications.

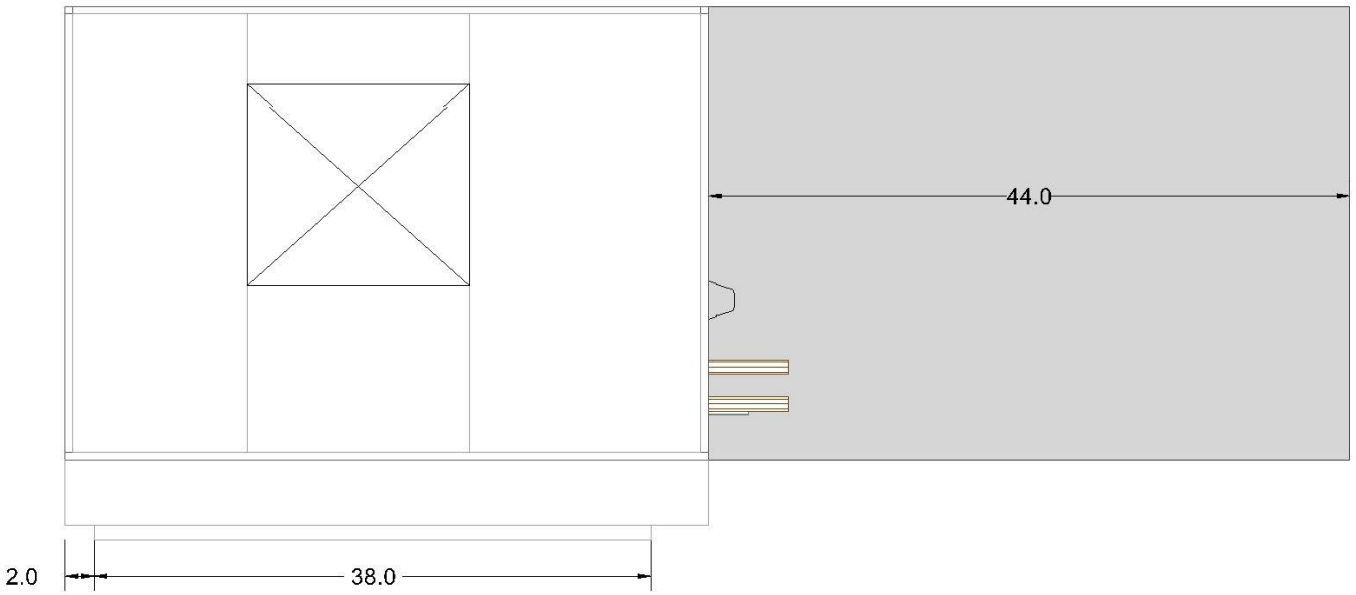

	Unit Tag: AHU-22 - Eiland (RH)			Sales Office: HTS Texas			DAIKIN
Product: PreciseLine® Air Handler	Project Name: Klein ISD Eiland ES AHU			Sales Engineer:			13600 Industrial Park Blvd. Minneapolis, MN 55441
Model: BCVD0301	Jan. 16, 2026	Ver/Rev:	Sheet: 1 of 1	Scale: NTS	Tolerance: +/- 0.25"	Dwg Units: in [mm]	www.DaikinApplied.com Software Version: 07.40

No change to this drawing may be made unless approved in writing by Daikin Applied. Purchaser must determine that the equipment is fit and sufficient for the job specifications.

BQZQ3P | Klein ISD Eiland ES AHU re | 130 | 1/16/2026

AHU-22 - Eiland (RH) | PreciseLine Drawings

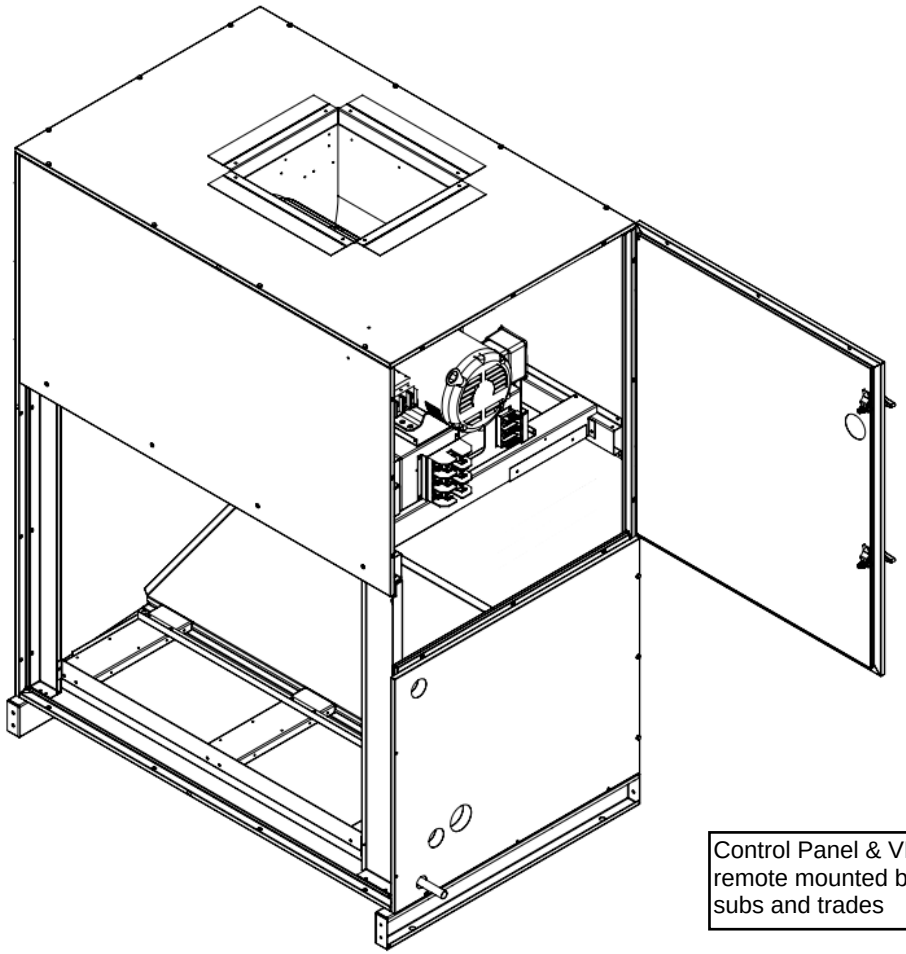

Control Panel & VFD to be remote mounted by Installing subs and trades

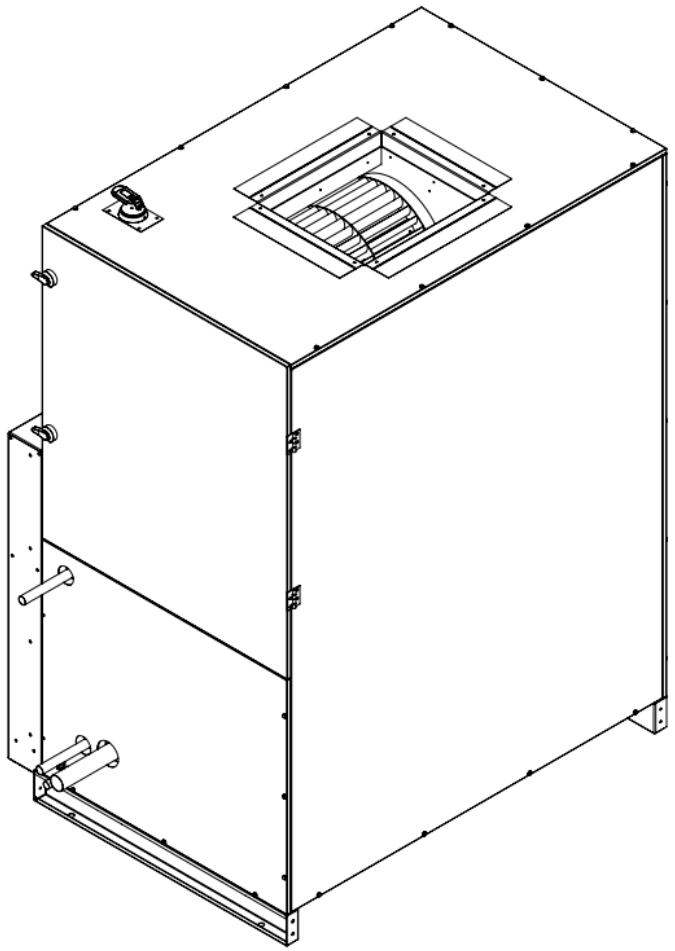

	Unit Tag: AHU-22 - Eiland (RH)			Sales Office: HTS Texas			DAIKIN
Product: PreciseLine® Air Handler	Project Name: Klein ISD Eiland ES AHU			Sales Engineer:			13600 Industrial Park Blvd. Minneapolis, MN 55441
Model: BCVD0301	Jan. 16, 2026	Ver/Rev:	Sheet: 1 of 1	Scale: NTS	Tolerance: +/- 0.25"	Dwg Units: in [mm]	www.DaikinApplied.com Software Version: 07.40

No change to this drawing may be made unless approved in writing by Daikin Applied. Purchaser must determine that the equipment is fit and sufficient for the job specifications.

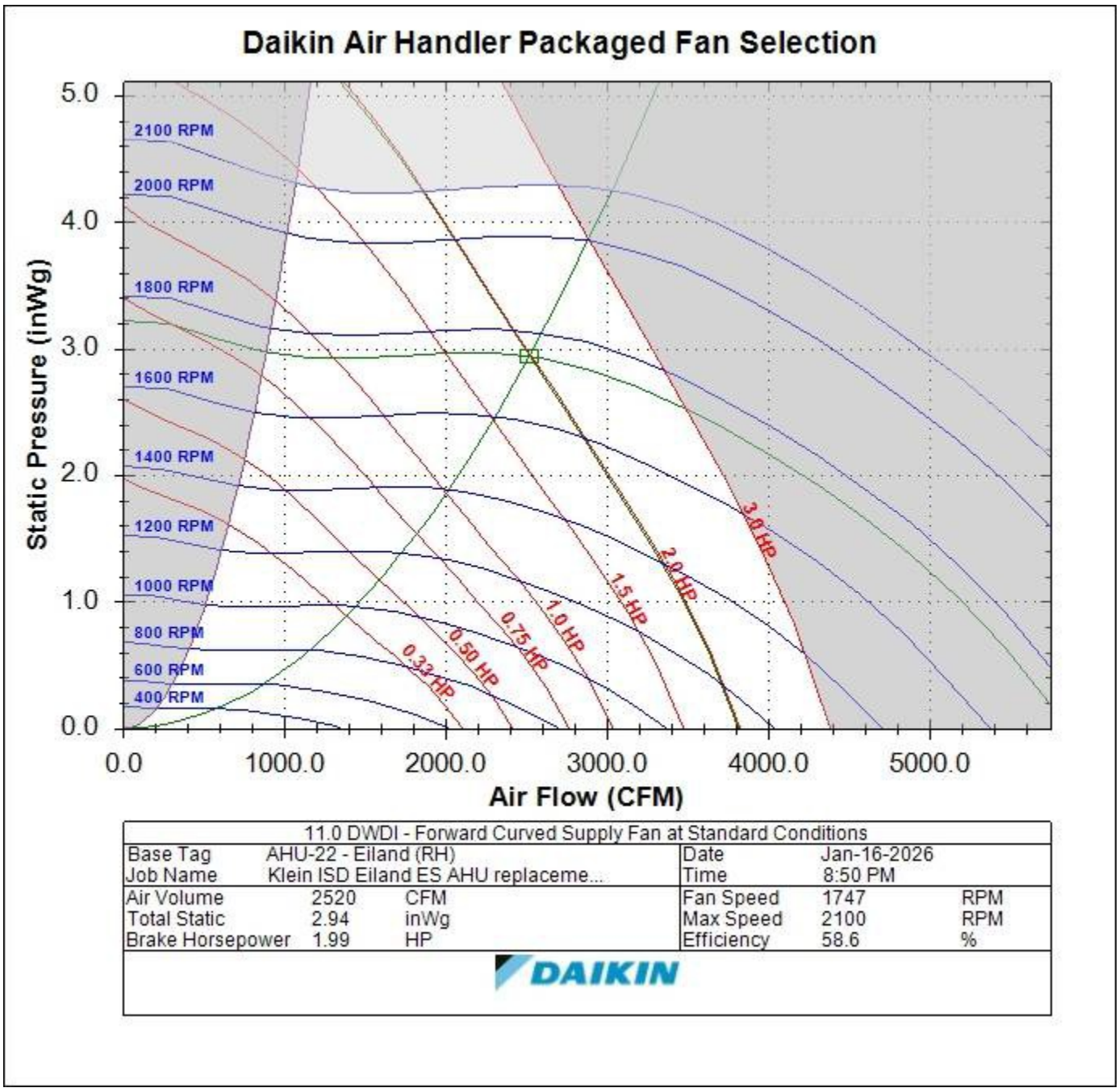

11.0 DWDI - Forward Curved Supply Fan at Standard Conditions					
Base Tag	AHU-22 - Eiland (RH)		Date	Jan-16-2026	
Job Name	Klein ISD Eiland ES AHU replaceme...		Time	8:50 PM	
Air Volume	2520	CFM	Fan Speed	1747	RPM
Total Static	2.94	inWg	Max Speed	2100	RPM
Brake Horsepower	1.99	HP	Efficiency	58.6	%

DAIKIN

VENDOR INFORMATION		SPECIFICATIONS	
NAME	PART NUMBER	PRODUCT TYPE	MODEL NUMBER
NIDEC	FU44	MOTOR	-
OR ENGINEERING APPROVED EQUIVALENT		-	-

0M

WHEEL DATA (REF ONLY)			
WHEEL DESCRIPTION	WHEEL WEIGHT	MAX RPM	DIM 'A'
15x15 FC DWDI	16.9lbs	1750	9.81
12x12 FC DWDI	10.40lbs	2100	8.31
10x10 FC DWDI	7.50lbs	2550	7.06

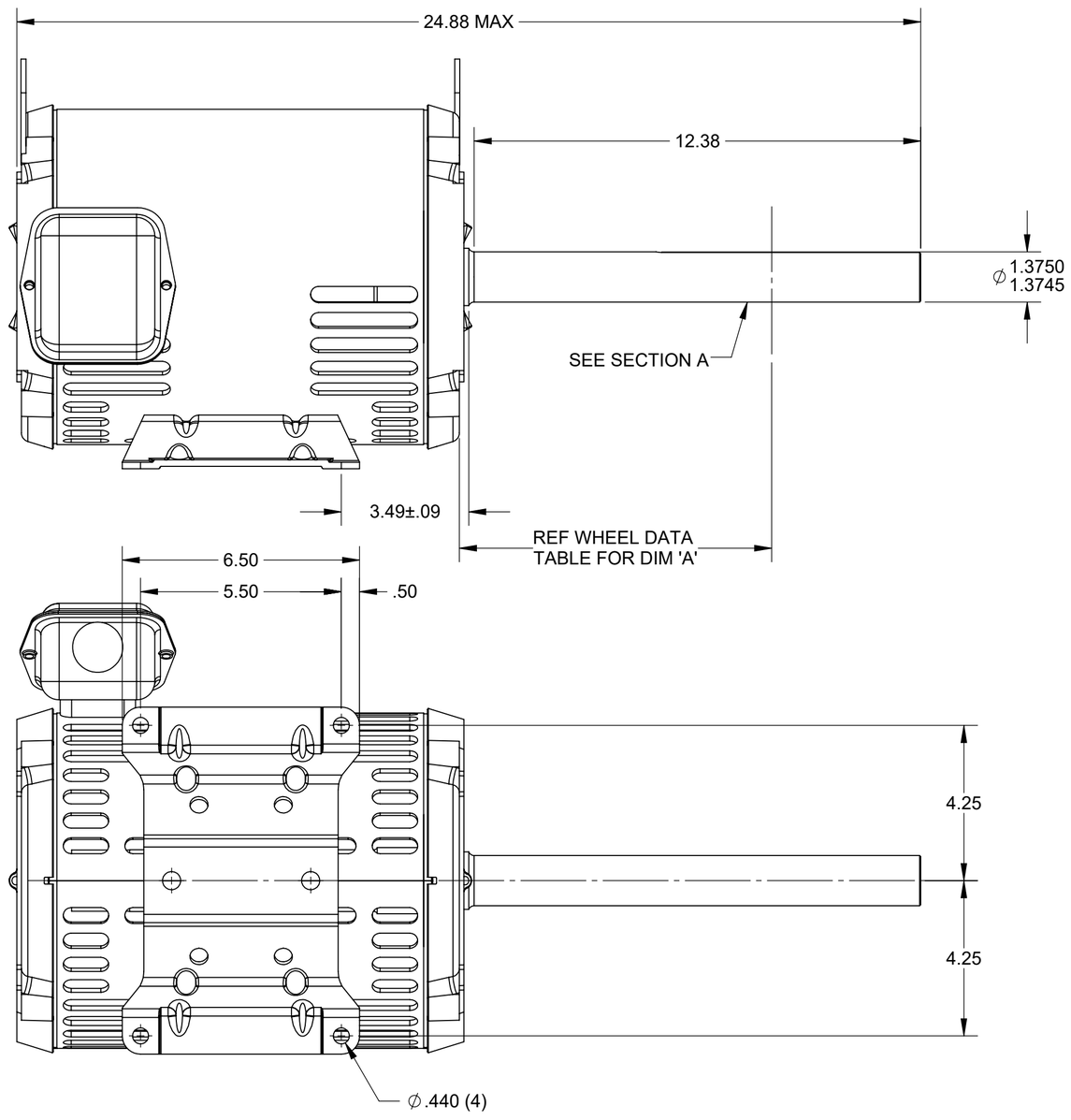

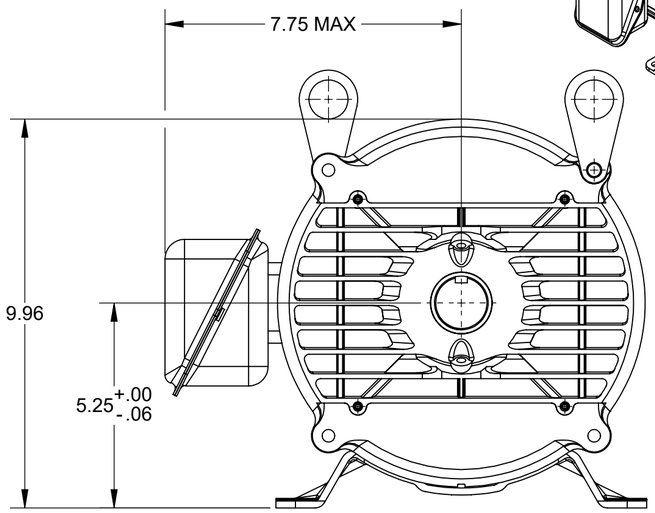

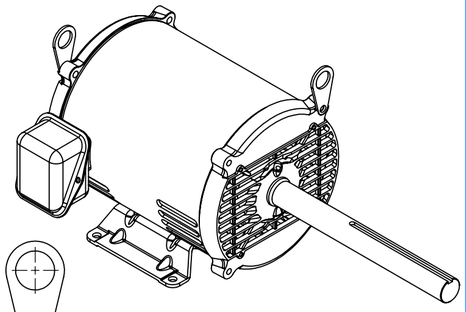

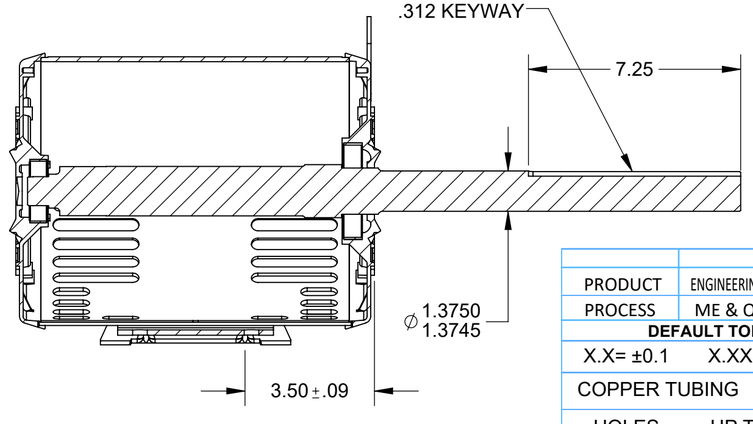

SECTION A–A

0M **NOTES:**

MOTOR SPECIFICATIONS:

HORSE POWER: 7 1/2 HP
RPM: 1765
VOLTAGE: 208-230/460/60/3
FLA: 20.1-18.5/9.3
SERVICE FACTOR: 1.15
SUITABLE FOR OPERATION AT:
5 HP, FLA: 13.7-13.2/6.6
EFFICIENCY: PREMIUM, VFD READY
ENCLOSURE: OAO
NEMA FRAME SIZE: 213TZ WITH EXTENDED SHAFT
INSULATION: CLASS H MINIMUM
BEARING TYPE: SEALED

0M

IMPORTANT QUALITY CONSIDERATIONS
1.) ZERO DEFECTS IS THE STANDARD. 2.) NO CHANGES ARE TO BE MADE TO DIM. MATERIALS, AND/OR PROCESSES WITHOUT PRIOR NOTIFICATION AND APPROVAL

			FIT	FORM	FUNCTION	SAFETY
PRODUCT	ENGINEERING	KPC		◇		S
PROCESS	ME & QE	KCC		△		A

DEFAULT TOLERANCE (APPLY TO FINISHED VIEW ONLY)

X.X= ±0.1 X.XX= ±0.03 X.XXX= ±0.005 ANGLE = ±2°

COPPER TUBING ANGLE ±3° X.XX = ±0.06

HOLES UP TO 0.500= ±0.004 OVER 0.500= ±0.007

FINISH: 125 MICROINCH ON MACHINED SURFACES

PART RELEASE APPROVAL

DRN	DATE	ECO NUMBER	
AUC	04/22/2024	C001611942	CL = N/A

REVISION CHANGE DESCRIPTION

CHANGED ENCLOSURE FROM ODP TO OAO, ADDED TABLE VENDOR INFO AND QUALITY NOTE, AND UPDATED DESCRIPTION

SCALE	NONE	UNITS	INCHES
RAW MAT	-		

DAIKIN

THIRD ANGLE PROJECTION

THE CONTENTS OF THIS MATERIAL ARE CONFIDENTIAL AND PROPRIETARY TO DAIKIN APPLIED ANY UNAUTHORIZED USE, REPRODUCTION, DISCLOSURE OR TRANSFER IS STRICTLY PROHIBITED. IF FURNISHED WITH A PROPOSAL, RECIPIENT MAY USE THIS MATERIAL SOLELY TO EVALUATE SUCH PROPOSAL. IF FURNISHED TO AN EXISTING OR POTENTIAL VENDOR, THIS MATERIAL MAY BE USED SOLELY IN PREPARATION OF PROPOSAL OR PERFORMANCE OF WORK FOR DAIKIN APPLIED.
DAIKIN APPLIED 2013. All rights reserved.

DESCRIPTION MOTOR, 7 1/2HP, 1765 RPM, 208-230/460/3/60, 213TZ, OAO, PREM

SHEET	PART NUMBER	SIZE	REVISION
1 of 1	910200840	C	0M

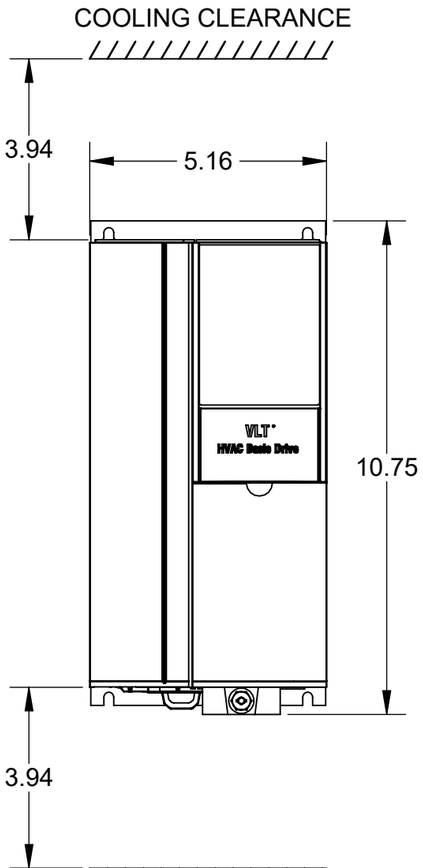

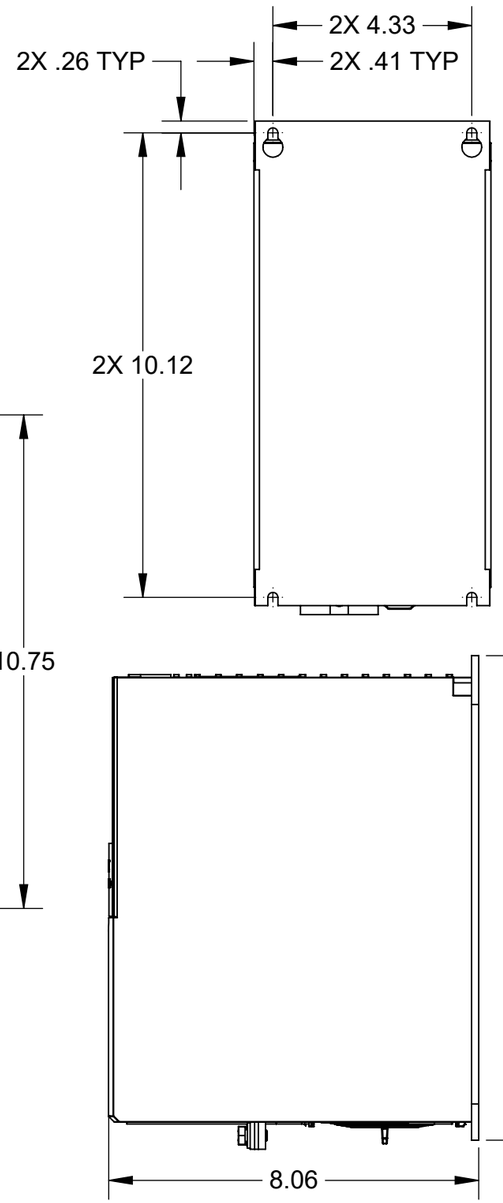

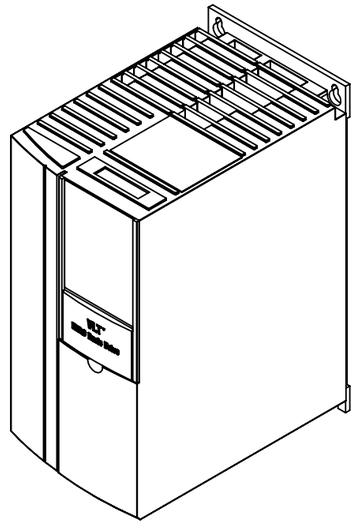

NOTES:

1. ALL OUTPUT CURRENT VALUES AT MAX. 3281' ELEVATION. DERATING REQUIRED ABOVE 3281'
2. SIDE CLEARANCE NOT REQUIRED.
3. ALL PROTOCOLS EMBEDDED. THERE ARE NO OPTIONAL PROTOCOLS AVAILABLE.
4. EFFICIENCY VARIES BETWEEN 97.7 AND 98.7% (DEPENDING ON MODEL).

SPECIFICATIONS			
VOLTAGE			3X525-600VAC
HP			5.0
KW			3.7
FRAME/CHASSIS SIZE			H9
WEIGHT (LBS)			15.87
INPUT CURRENT	@525-600V		5A
OUTPUT CURRENT MAX CONTINUOUS 525-600V	1	@40 °C (104 °F)	6.4A
		@50 °C (122 °F)	4.5A
POWER LOSS, TYPICAL			110W
CLEARANCE REQUIRED ABOVE/BELOW	2		3.94"
EMBEDDED PROTOCOLS	3		FC, MODBUS RTU, BACNET MSTP
DANFOSS ORDER NUMBER			134F0217
KEYPAD	NOT INCLUDED		404222370
REFERENCE NEMA1	KIT		206474809
TIGHTENING TORQUE (IN./LBS)	LINE AND MOTOR		16
	GROUND		27
	DC BUS		Not recommended
	CONTROL		4.0
	RELAY		5.0
MAX WIRE SIZE (AWG)	LINE AND MOTOR		10
	CONTROL		14
REQUIRED FUSES (100k SCCR) (MUST BE BUSSMANN BRAND)	FAST ACTING CLASS CF, RK1, J, T (TYP FCF, KTS-R, JKS, JJS)		20
	TIME-DELAY CLASS CF, RK5, J (TYP TCF, FRS-R, LPJ)		

			FIT	FORM	FUNCTION	SAFETY
PRODUCT	ENGINEERING	KPC		◇		S
PROCESS	ME & QE	KCC		△		S

DEFAULT TOLERANCE

TOLERANCES ONLY APPLY TO FINISHED VIEW DIMENSIONS ONLY

X.X= ±0.1	X.XX= ±0.03	COPPER TUBING	
ANGLE = ±2°	X.XXX= ±0.005	ANGLE ±3°	X.XX = ±0.06

HOLES Up to 0.500= ±0.004 or Over 0.500= ±0.007

FINISH: 125 MICROINCH ON MACHINED SURFACES

PART RELEASE APPROVALS

DRN	DATE	ECO NUMBER	CL =
YGR	12/23/2022	C001404512	

REVISION CHANGE DESCRIPTION

REFORMATED INFORMATION TABLE. CHANGED OUTPUT CURRENT MAX CONTINUOUS 3X525-600VAC@ 40°C FROM 6.4A TO 4.5A

SCALE	UNITS	RAW MAT
NONE	INCHES	

DAIKIN

THIRD ANGLE PROJECTION

THE CONTENTS OF THIS MATERIAL ARE CONFIDENTIAL AND PROPRIETARY TO DAIKIN APPLIED ANY UNAUTHORIZED USE, REPRODUCTION, DISCLOSURE OR TRANSFER IS STRICTLY PROHIBITED. IF FURNISHED WITH A PROPOSAL, RECIPIENT MAY USE THIS MATERIAL SOLELY TO EVALUATE SUCH PROPOSAL. IF FURNISHED TO AN EXISTING OR POTENTIAL VENDOR, THIS MATERIAL MAY BE USED SOLELY IN PREPARATION OF PROPOSAL OR PERFORMANCE OF WORK FOR DAIKIN APPLIED.

DAIKIN APPLIED 2013. All rights reserved.

DESCRIPTION: VARIABLE FREQUENCY DRIVE (VFD),FC-101, 3x525-600VAC,5 HP, 6.4 A, H9 FRAME

Sheet	PART NUMBER	SIZE	REVISION
1 of 1	404222483	B	0A

HTS Texas
3350 Yale Street
Houston, Texas 77018
P 832.328.1010
F 832.328.1460

SUBMITTAL DATA
APPROVAL REQUIRED

PROJECT	:	Klein ISD Kaiser 2025 FRP
HTS JOB NUMBER	:	22513311 - MECH
SOLD TO	:	TBD
MECHANICAL CONSULTANT	:	Salas O'Brien
SHIPPING ADDRESS	:	TBD
HTS SALESPERSON	:	Matt McPherson
DATE	:	01/16/2026
REVISION NUMBER	:	00
SPECIFICATION SECTION	:	23 73 13
STANDARD LEAD TIME	:	

TAG	QTY	DESCRIPTION	MODEL	MANUFACTURER
AHU-PE-1	1	DX Air Handling Unit	Vision	Daikin Applied

APPROVAL STAMPS



SUBMITTAL DATA

Job Name	Klein ISD Kaiser ES AHU replacments
For	
Sold To	
Prepared For	
Customer PO#	
Prepared By	Erick Beltran
Date	1/16/2026

Table of Contents

Daikin Section Divider 3

Technical Data Sheet - AHU-PE-1 (Kaiser) Final 4

Drawing - AHU-PE-1 (Kaiser) Final 9

Fan Curve - AHU-PE-1 (Kaiser) Final 17


DAIKIN

Job Information	Technical Data Sheet
Job Name	Klein ISD Kaiser ES AHU replacments
Date	January 16 2026
Submitted By	Salas O'Brien
Software Version	13.82
Unit Tag	AHU-PE-1 (Kaiser) Final

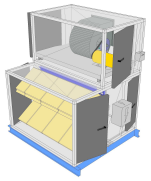

Unit Overview

Model Number	Supply					
	Air Volume cfm	Static Pressure		External Dimensions		
		External inWc	Total inWc	Height in	Width in	Length in
CAH020GDAM	8300	0.75	2.26	52*	78*	74**

**Not including base rails, coil connectors, drain connectors and control boxes.*

***Total lower deck length.*

Unit

Model Number:	CAH020GDAM		
Approval:	ETL Listed / ETL Listed to Canadian Safety Standards (ETL Label / ETLc Label)		
Outer Panel:	18 gauge G90 Galvanized Steel (unpainted)		
Liner:	24 gauge Galvanized Steel (unless noted per section)		
Insulation:	R-13 Injected Foam		
Unit Configuration:	Stacked / vertical	**Drive (Handling) Location:**	Right
Base:	6" formed channel	**Wall Thickness:**	2 in
Altitude:	0 ft	**Parts Warranty:**	Additional One Year, Two Year Total

Panel Filter

Component: 1 | Length: 30 in | Shipping Section: 1

Type	Efficiency	Nominal Face Velocity	Actual Face Velocity	Actual Face Area	Air Volume	Filter Loading
Pre Pleat	MERV 13	231 ft/min	232 ft/min	35.8 ft²	8300 cfm	Side

Air Pressure Drop				Number of Filters	Height	Width	Depth
Clean Air	Mean Air	Dirty Air	User Spec				
0.12 inWc	**0.56** inWc	1.00 inWc	N/A	3	24 in	24 in	2 in
				6	24 in	20 in	2 in
				3	24 in	12 in	2 in

Door

Location	Drive Side Door Width	Opp. Drv. Side Door Width	Opening
Both sides	26 in	26 in	Outward

Direct Expansion Coil	Component: 2	Length: 44 in	Shipping Section: 1

Coil Model	Total Capacity	Sensible Capacity	Number of Coils	Number of Rows	Fins per Inch	Tube Diameter	Tube Spacing (Face x Row)
4EJ1206B014	329633 Btu/hr	235924 Btu/hr	1	6	12	0.500 in	1.50 in x 1.299 in

Coil Operating Weight
575 lb

Air Volume	Air Temperature				Coil Air Pressure Drop	Finned Height	Finned Length	Face Area	Face Velocity
	Entering		Leaving						
	Dry Bulb	Wet Bulb	Dry Bulb	Wet Bulb					
8300 cfm	78.2 °F	65.2 °F	51.6 °F	51.3 °F	0.82 insWg	42.50 in	65.00 in	19.18 ft²	433 ft/min

Fluid		Sub-Cooled Refrigerant Liquid Temp.	Suction Vapor Superheat Temp. at Coil Outlet	Design Saturated Condensing Temp.	Total Refrigerant Weight	Total Coil Volume
Suction Temp.	Refrigerant					
45.0 °F	R32	110.0 °F	8.0 °F	110.0 °F	10.00 lb	1.64 ft³

Connection [Data Per Coil]					Min. Fin Surface Temp.	Min. Tube Wall Surface Temp.
Type	Liquid [Qty - Size]	Suction [Qty - Size]	Location	Material		
OD Sweat	2-0.875 in	2-1.375 in	Drive side	Copper tube	32.0 °F	32.0 °F

Material				Drain Pan	Drain Side
Fin	Tube	Header	Case		
Aluminum .0075 in	Copper .020 in	Copper	Stainless steel	Stainless steel	Drive side

Control Panel			
Location:	Factory Installed	Voltage:	120
Height x Width x Depth:	16.00 in x 12.00 in x 9.00 in	MCA:	2A
Equipment:	Leak Detection	MOP:	10A
Enclosure:	NEMA 3	Wiring Harness:	Factory Wired

Total Refrigerant Weight is the total for all circuits of all coils in this coil section and is estimated. Refer to the AHU and Condensing Unit IOMs for recommendations on system start-up.

Minimum allowable face velocity = 150 fpm

80% liquid to 20% vapor is the assumption used for the charge calculation.

Volume includes coil fin pack and header.

Harness is wired from refrigerant sensor to the refrigerant detection control panel. A separate field connection is required for 120V power.

AHRI 410 Certification
Coil is NOT certified by AHRI

Door			
Location	Drive Side Door Width	Opp. Drv. Side Door Width	Opening
Both sides	18 in	28 in	Outward

Supply Fan

Component: 3 | Length: 46 in | Shipping Section: 2

Fan Performance

Air Volume	Static Pressure			Fan Energy Index(FEI)	Total Input Power	Fan Shaft Power	Fan Wheel Speed		Outlet Velocity
	External	Total	Cabinet				Operating	Maximum	
8300 cfm	0.75 inWc	2.26 inWc	0.13 inWc	1.01	5.2 kW	5.51 BHP	878 rpm	1450 rpm	2872 ft/min

Fan Data

Fan Type	Blade Type / Class	Quantity of Fans	Wheel Diameter	Number of Blades	Discharge	Motor Location
Centrifugal DWDI	Forward Curved / 2	1	18.03 in	N/A	Top horizontal	To Side of Fan

Motor Data

Power	Electrical Supply	Speed	Efficiency	Enclosure	Frame Size	Supplier	Number of Poles	Lock Rotor Current	Full Load Current
10.0 HP	460/60/3 V/Hz/Phase	1750 rpm	Premium	TEFC	215 T frame	Generic	4	106.62 A	12.50 A

Fan Options

Shaft Grounding Kit:	Provided	**Isolator Type:**	Spring

Drive Package Data*

Fan Sheave	Motor Sheave	Belt	Number of Belts	Actual Drive S.F.	Bearing Type
2B5V94	2BK52H	BX46	2	1.32	Standard - L50 (200K)

**Daikin Applied reserves the right to provide a different but equivalent drive package*

VFD/Starter/Disconnect Data

Selection Type:	External J-Box	**Vendor:**	Factory Standard
Voltage:	460 V	**Height x Width x Depth:**	6.00 in x 6.00 in x 4.00 in
Mounting:	Door Side	**Enclosure:**	NEMA 1

Door

Location	Drive Side Door Width	Opp. Drv. Side Door Width	Opening
Both sides	30 in	30 in	Outward

Unit Sound Power (dB)

Type	63 Hz	125 Hz	250 Hz	500 Hz	1000 Hz	2000 Hz	4000 Hz	8000 Hz
Radiated:	73	73	63	62	57	49	46	51
Unit Discharge:	83	83	81	83	79	77	74	69
Unit Return:	78	77	74	76	71	69	64	57

Shipping Section Details

Section	Length in	Weight lb	Corner Weights (lb)				Center of Gravity (in)		
			P1	P2	P3	P4	XX	YY	ZZ
1	74	1646	405	383	418	441	39	38	28
2	46	1056	324	229	204	299	22	32	22
Entire Unit	**74** *Lower level only*	**2702**	**n/a**	**n/a**	**n/a**	**n/a**	**n/a**	**n/a**	**n/a**

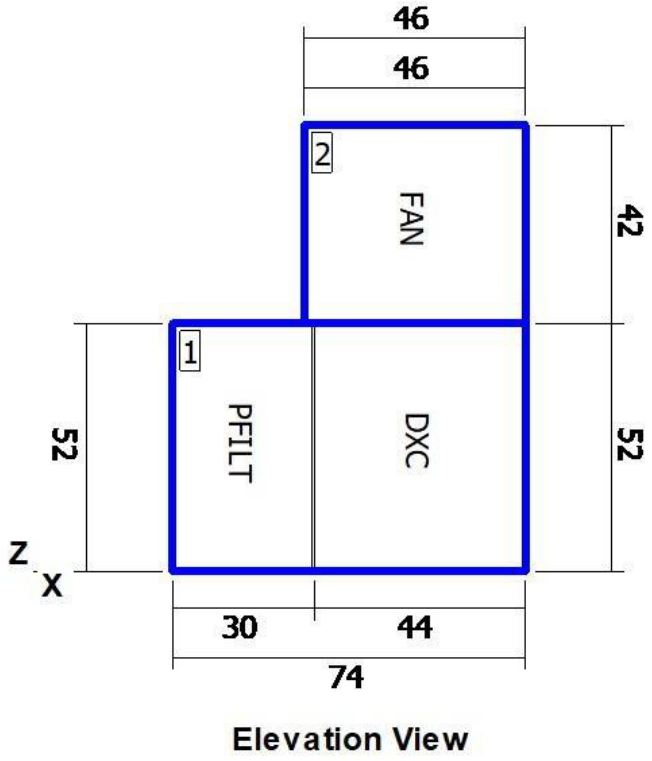

Elevation View

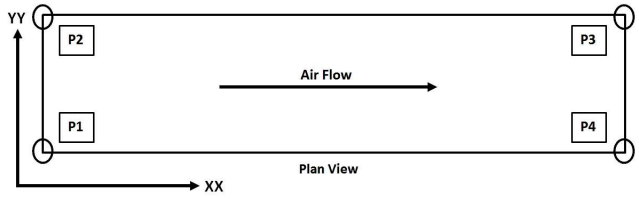

NOTE: Special components aren't included in the corner weights and center of gravity data.

Shipping Protection	None

Supply Static Pressure Drop

Component	Option	Static Pressure Drop
Panel Filter	Panel Filter	0.56 insWg
DX Coil	DX Coil	0.82 insWg
Supply Fan	Cabinet	0.13 insWg
External Static	External Static	0.75 insWg
Total Supply Fan Static		2.26 insWg

Minimum Recommended Drain Pan Trap Dimensions

Shipping Section	Component	H
1	DX Coil	3.26

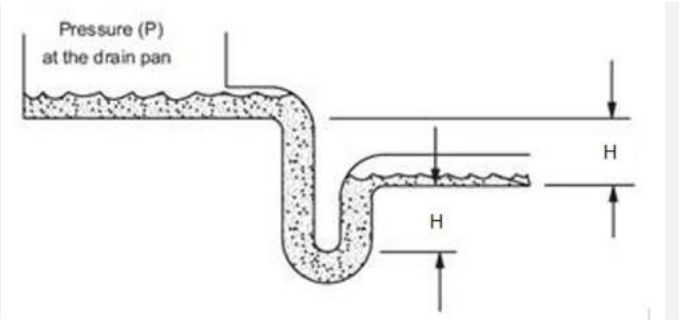

Dimensions provided as a courtesy and are recommended minimums only. Daikin is not responsible for supplying or designing drain pan traps and is not responsible for any damage caused by incorrect trap heights. The dimensions listed above should be reviewed and approved by a licensed plumbing professional.

AHRI Certification

Certified by the AHRI Central Station Air-Handling Unit (AHU) Certification Program, which is based on AHRI Standard 430/431. AHRI certified units are subject to rigorous and continuous testing, have performance ratings independently measured and are third-party verified. Certified units may be found in the AHRI Directory at www.ahridirectory.org.

Notes

Standard
1. As a standalone component, unit meets or exceeds requirements of ASHRAE 90.1 - 2007. The approving authority is responsible for compliance of multi - component building systems.

NXTFGP

Klein ISD Kaiser ES AHU re

9

1/16/2026

AHU-PE-1 (Kaiser) Final

Drawing

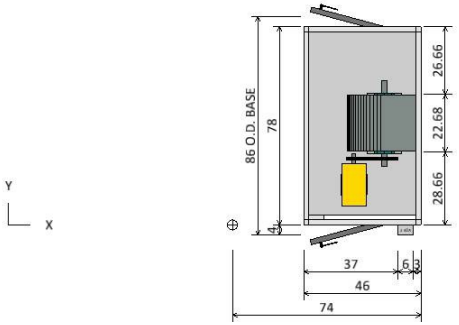

TOP DECK PLAN VIEW

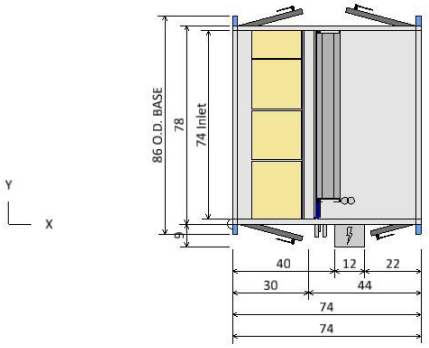

BOTTOM DECK PLAN VIEW

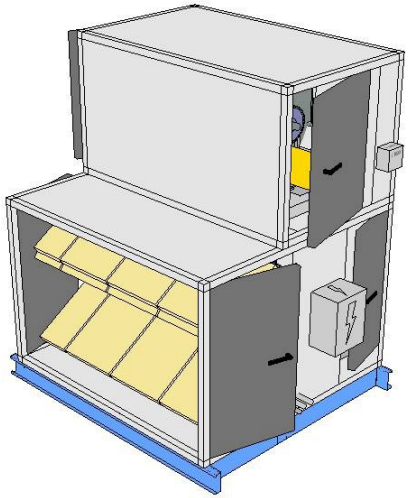

ISOMETRIC VIEW

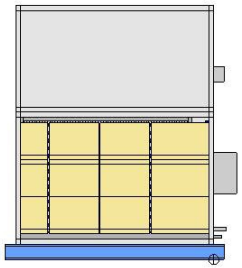

FRONT END VIEW

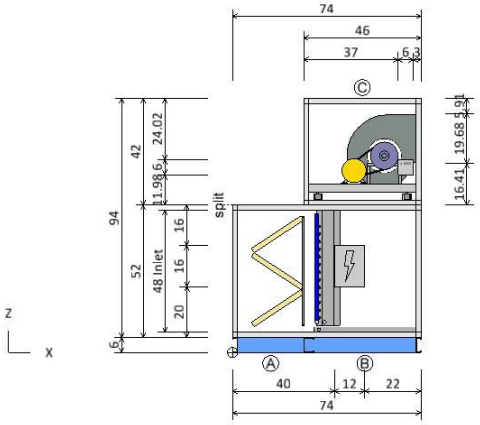

ELEVATION VIEW

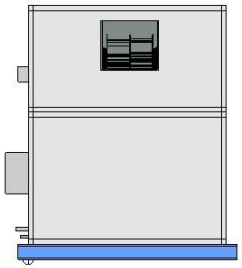

REAR END VIEW

Product Drawing	Unit Tag: AHU-PE-1 (Kaiser) Final			Sales Office: HTS Texas		
Product: Vision Air Handler	Project Name: Klein ISD Kaiser ES AHU replacements			Sales Engineer:		
Model: CAH020GDAM	Jan. 16, 2026	Ver/Rev:	Sheet: 1 of 1	Scale: NTS	Tolerance: +/-0.25"	Dwg Units: in

DAIKIN

13600 Industrial Park Blvd, Minneapolis, MN 55441

www.DaikinApplied.com Software Version: 13.82

All opening dimensions have a 1" mounting flange along the inner edge. The actual airflow area of the opening is 2" smaller in each dimension.

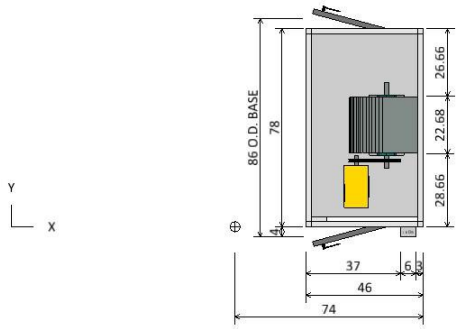

TOP DECK PLAN VIEW

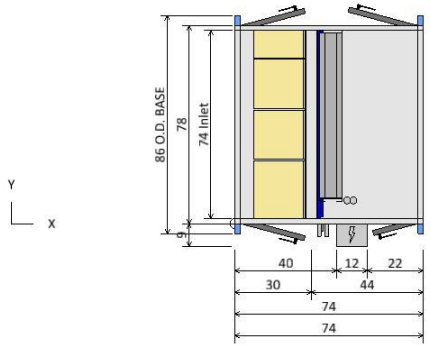

BOTTOM DECK PLAN VIEW

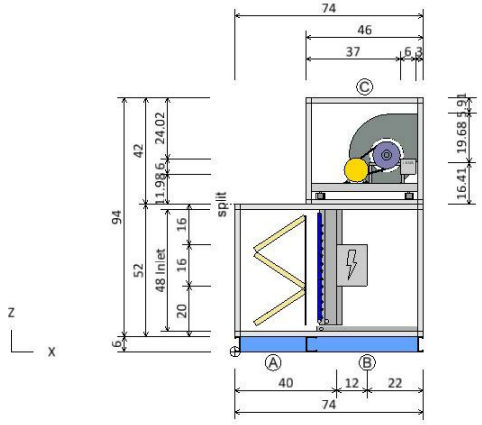

ELEVATION VIEW

Component Key		
Ⓐ	Panel Filter	
	Filter Type:	PrePleat (MERV 13)
	Right Door (WxH):	26 ins x 48 ins
	Left Door (WxH):	26 ins x 48 ins
Ⓑ	DX Coil	
	Coil Model:	4EJ1206B014
	Total Capacity:	329633.0 Btu/hr
	Right Door (WxH):	18 ins x 42 ins
	Left Door (WxH):	28 ins x 42 ins
Ⓒ	Supply Fan	
	Fan Type:	Centrifugal DWDI
	Fan Size (Class):	18 (2)
	Air Flowrate:	8300.0 cfm
	T.S.P:	2.3 insWg
	Motor Power:	10.0 HP
	Right Door (WxH):	30 ins x 38 ins
	Left Door (WxH):	30 ins x 38 ins

Product Drawing	Unit Tag: AHU-PE-1 (Kaiser) Final			Sales Office: HTS Texas		
Product: Vision Air Handler	Project Name: Klein ISD Kaiser ES AHU replacments			Sales Engineer:		
Model: CAH020GDAM	Jan. 16, 2026	Ver/Rev:	Sheet: 1 of 1	Scale: NTS	Tolerance: +/-0.25"	Dwg Units: in

DAIKIN
13600 Industrial Park Blvd, Minneapolis, MN 55441
www.DaikinApplied.com Software Version: 13.82

All opening dimensions have a 1" mounting flange along the inner edge. The actual airflow area of the opening is 2" smaller in each dimension.

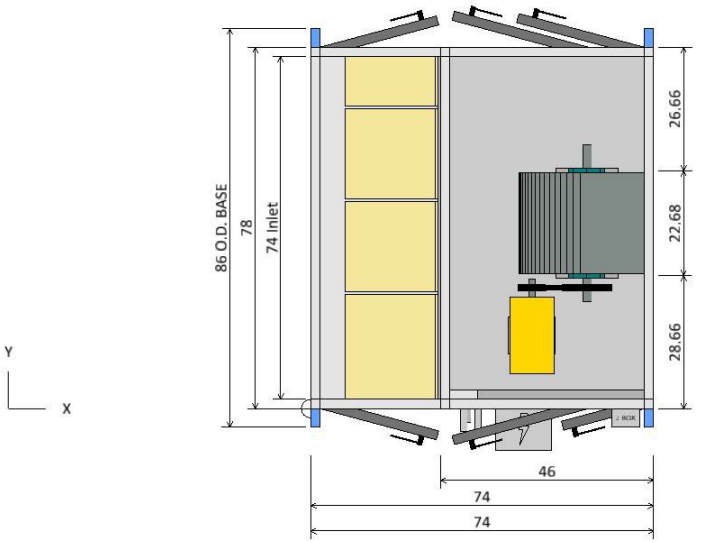

PLAN VIEW

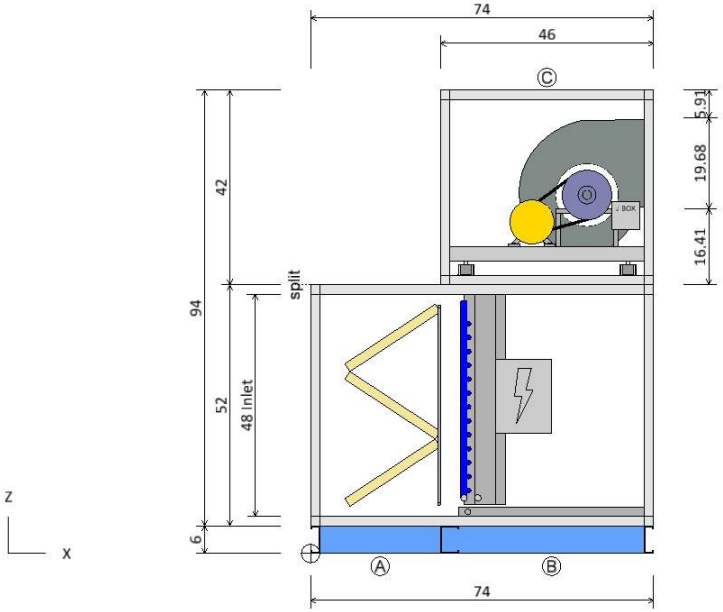

ELEVATION VIEW

Component Key

	Type	X	Y	Z	Wid	Hgt
Ⓐ	Panel Filter Opening	0.00	2.00	8.00	74.00	48.00
Ⓒ	Supply Fan Fan Discharge	74.00	34.66	74.41	22.68	19.68

Note: Dimensions are measured from the origin point.
Note: Openings with or without dampers are recessed into the unit by approximately 1.75 in.

Opening/Damper Connections	Unit Tag: AHU-PE-1 (Kaiser) Final			Sales Office: HTS Texas		
Product: Vision Air Handler	Project Name: Klein ISD Kaiser ES AHU replacements			Sales Engineer:		
Model: CAH020GDAM	Jan. 16, 2026	Ver/Rev:	Sheet: 1 of 1	Scale: NTS	Tolerance: +/-0.25"	Dwg Units: in

DAIKIN
13600 Industrial Park Blvd, Minneapolis, MN 55441
www.DaikinApplied.com Software Version: 13.82

All opening dimensions have a 1" mounting flange along the inner edge. The actual airflow area of the opening is 2" smaller in each dimension.

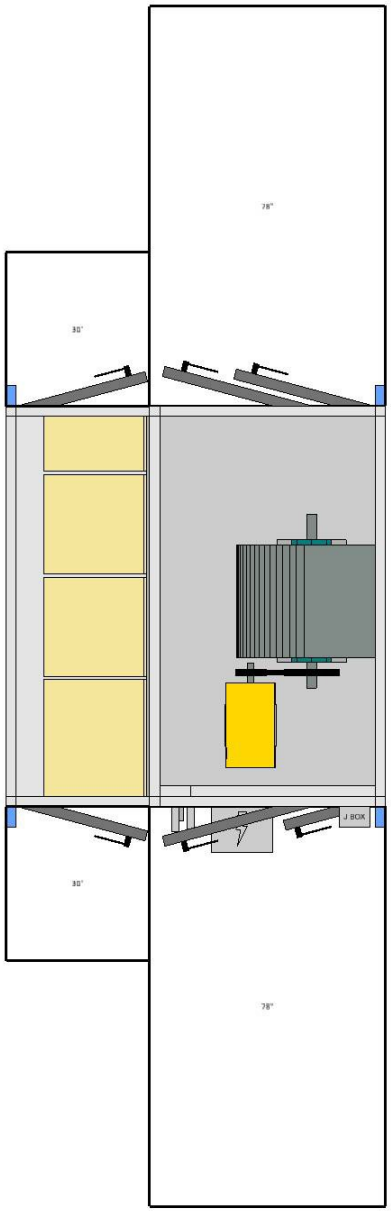

PLAN VIEW

Notes
Check local electrical component service clearance codes for specific distances. Access is only required on one side of the unit.

Service Clearance View	Unit Tag: AHU-PE-1 (Kaiser) Final			Sales Office: HTS Texas		
Product: Vision Air Handler	Project Name: Klein ISD Kaiser ES AHU replacments			Sales Engineer:		
Model: CAH020GDAM	Jan. 16, 2026	Ver/Rev:	Sheet: 1 of 1	Scale: NTS	Tolerance: +/-0.25"	Dwg Units: in

DAIKIN
13600 Industrial Park Blvd, Minneapolis, MN 55441
www.DaikinApplied.com Software Version: 13.82

All opening dimensions have a 1" mounting flange along the inner edge. The actual airflow area of the opening is 2" smaller in each dimension.

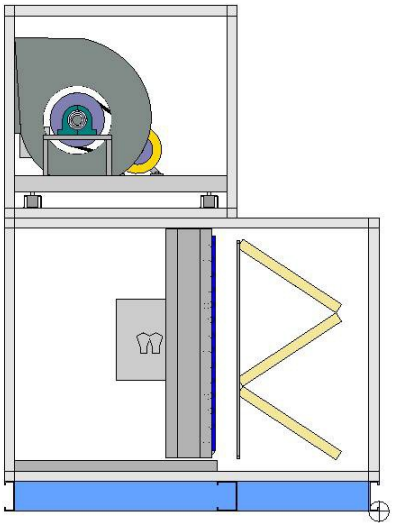

LEFT ELEVATION VIEW

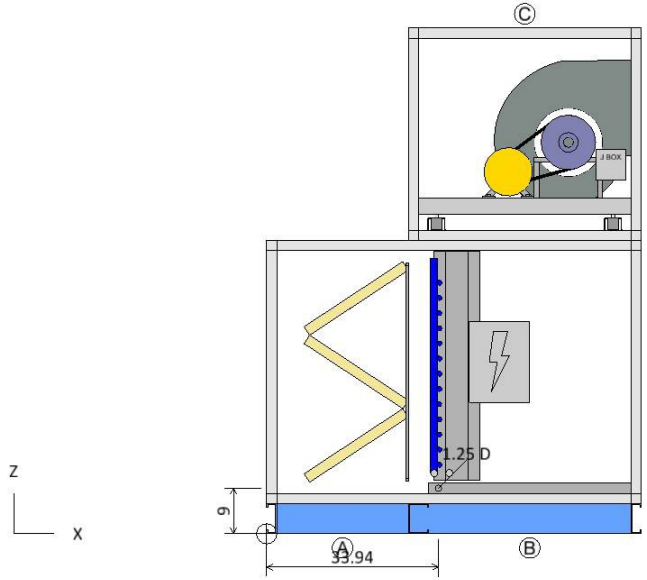

RIGHT ELEVATION VIEW

Coil and Drain Connections

	Type	X	Y	Z	Diam
	DX Coil Condensate drain conn:	33.94	-2.90	9.00	1.25
B	DX suction:	TBD	TBD	TBD	2- 1.38
	DX liquid conn:	TBD	TBD	TBD	2- 1.38
	DX liquid conn:	TBD	TBD	TBD	2- 0.88

Note: Dimensions are measured from the origin point.

Coil and Drain Connections	Unit Tag: AHU-PE-1 (Kaiser) Final			Sales Office: HTS Texas		
Product: Vision Air Handler	Project Name: Klein ISD Kaiser ES AHU replacements			Sales Engineer:		
Model: CAH020GDAM	Jan. 16, 2026	Ver/Rev:	Sheet: 1 of 1	Scale: NTS	Tolerance: +/-0.25"	Dwg Units: in

DAIKIN
13600 Industrial Park Blvd, Minneapolis, MN 55441
www.DaikinApplied.com Software Version: 13.82

All opening dimensions have a 1" mounting flange along the inner edge. The actual airflow area of the opening is 2" smaller in each dimension.

NXTFGP

Klein ISD Kaiser ES AHU re

14

1/16/2026

AHU-PE-1 (Kaiser) Final

Drawing

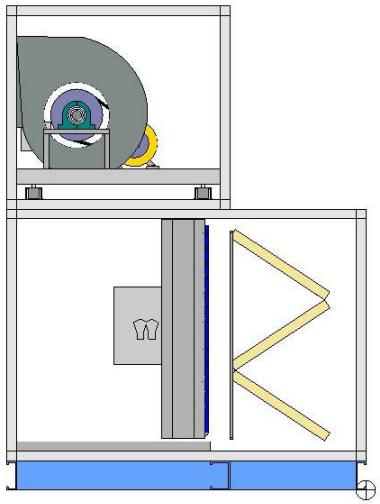

LEFT ELEVATION VIEW

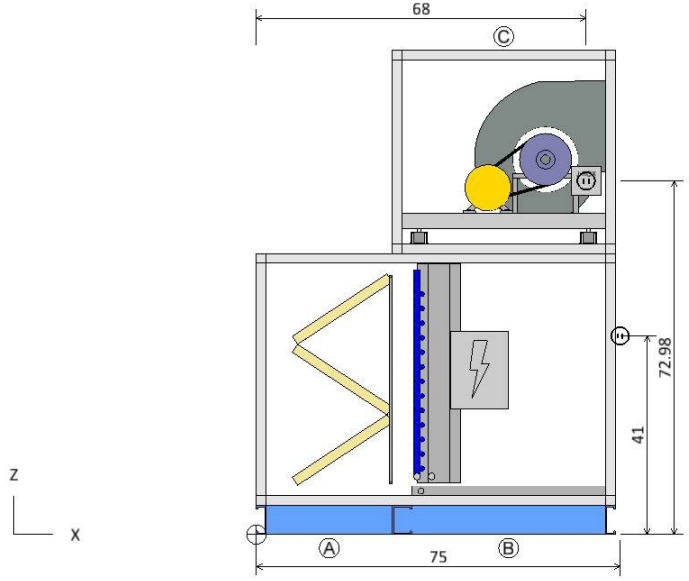

RIGHT ELEVATION VIEW

Component Key

	Type	X	Y	Z	Volts	Phase
Ⓑ	DX Coil DX Control Panel	75.00	0.00	41.00	120	1
Ⓒ	Supply Fan Fan	68.00	0.00	72.98	460	3

Note: Dimensions are measured from the origin point.

Electrical Connections	Unit Tag: AHU-PE-1 (Kaiser) Final			Sales Office: HTS Texas		
Product: Vision Air Handler	Project Name: Klein ISD Kaiser ES AHU replacements			Sales Engineer:		
Model: CAH020GDAM	Jan. 16, 2026	Ver/Rev:	Sheet: 1 of 1	Scale: NTS	Tolerance: +/-0.25"	Dwg Units: in

DAIKIN
13600 Industrial Park Blvd, Minneapolis, MN 55441
www.DaikinApplied.com Software Version: 13.82

All opening dimensions have a 1" mounting flange along the inner edge. The actual airflow area of the opening is 2" smaller in each dimension.

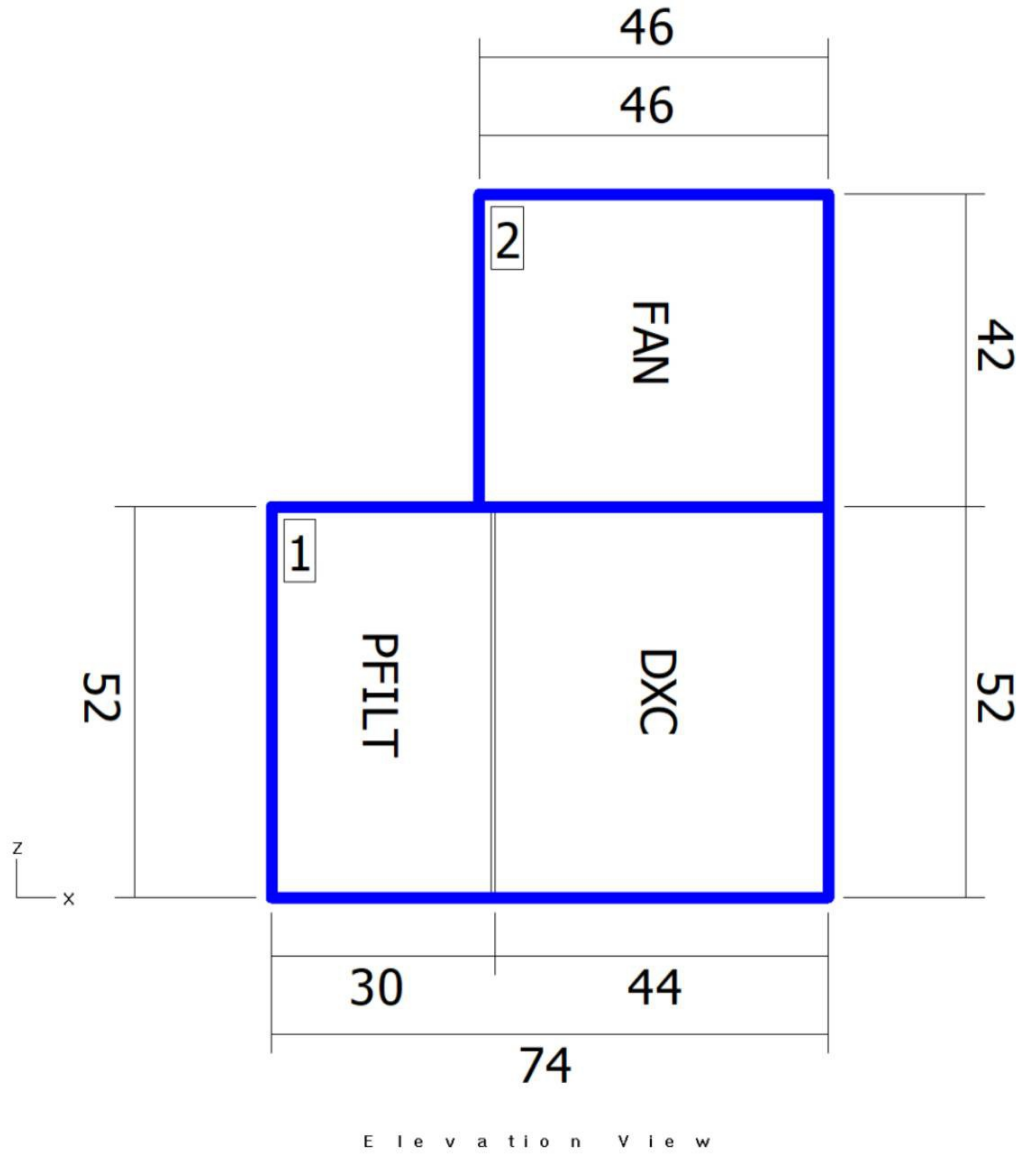

Elevation View

Shipping Sections

Section	Weight (lb)	X	Y	Z
Section 1	1646.48	74	78	52
Section 2	1056.42	46	78	42
Total Unit	2702.90	74	78	94

Note: Base rails, curb ready base, coil connectors, drain connectors, and control boxes not included in height X, Y, Z dimensions. Shipping section may be 2" longer in air flow direction due to internal splice joint.

Shipping Sections	Unit Tag: AHU-PE-1 (Kaiser) Final			Sales Office: HTS Texas		
Product: Vision Air Handler	Project Name: Klein ISD Kaiser ES AHU replacements			Sales Engineer:		
Model: CAH020GDAM	Jan. 16, 2026	Ver/Rev:	Sheet: 1 of 1	Scale: NTS	Tolerance: +/-0.25"	Dwg Units: in

DAIKIN
13600 Industrial Park Blvd, Minneapolis, MN 55441
www.DaikinApplied.com Software Version: 13.82

All opening dimensions have a 1" mounting flange along the inner edge. The actual airflow area of the opening is 2" smaller in each dimension.

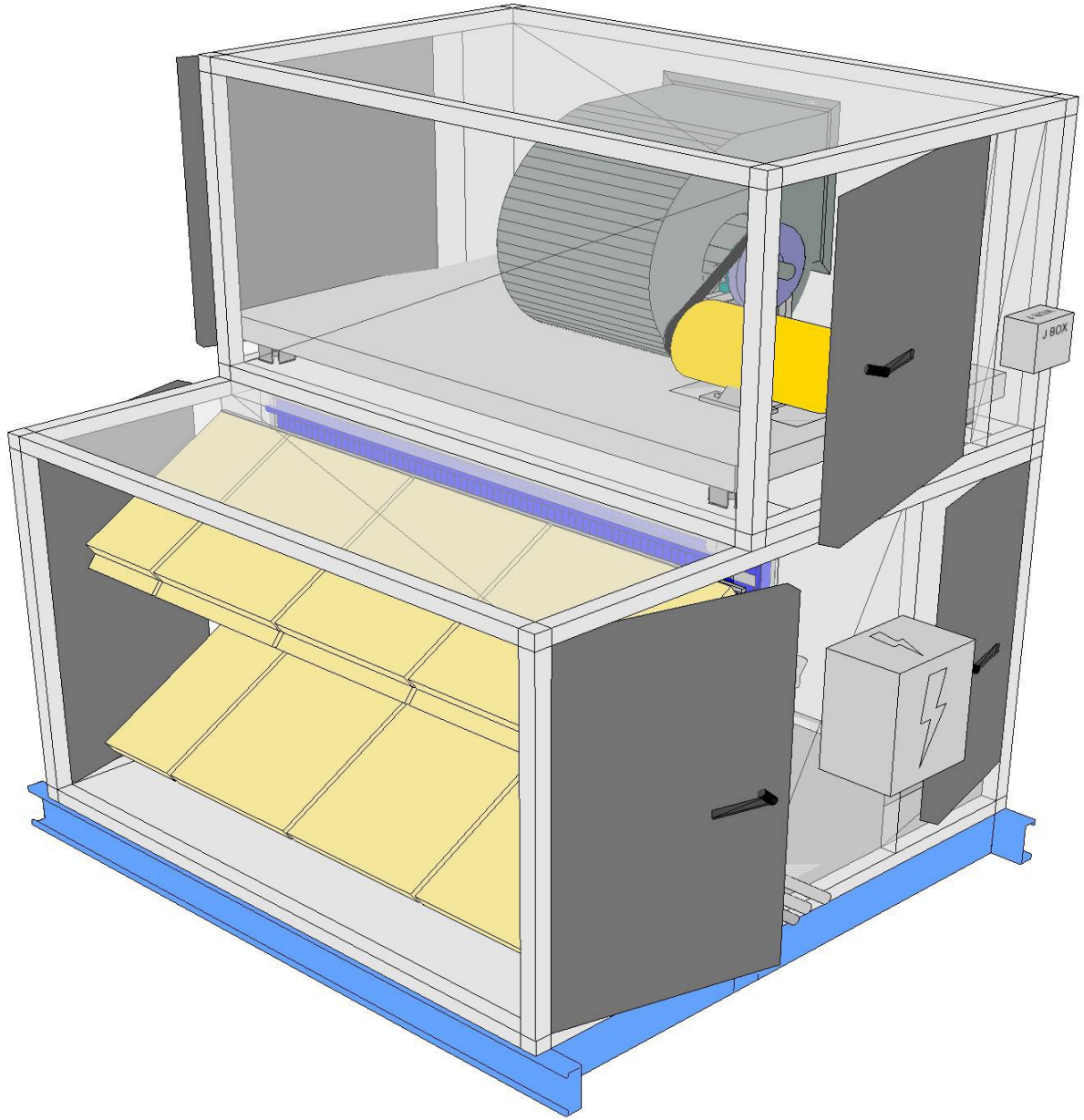

Product Drawing	Unit Tag: AHU-PE-1 (Kaiser) Final			Sales Office: HTS Texas			DAIKIN
Product: Vision Air Handler	Project Name: Klein ISD Kaiser ES AHU replacements			Sales Engineer:			13600 Industrial Park Blvd, Minneapolis, MN 55441
Model: CAH020GDAM	Jan. 16, 2026	Ver/Rev:	Sheet: 1 of 1	Scale: NTS	Tolerance: +/-0.25"	Dwg Units: in	www.DaikinApplied.com Software Version: 13.82

All opening dimensions have a 1" mounting flange along the inner edge. The actual airflow area of the opening is 2" smaller in each dimension.

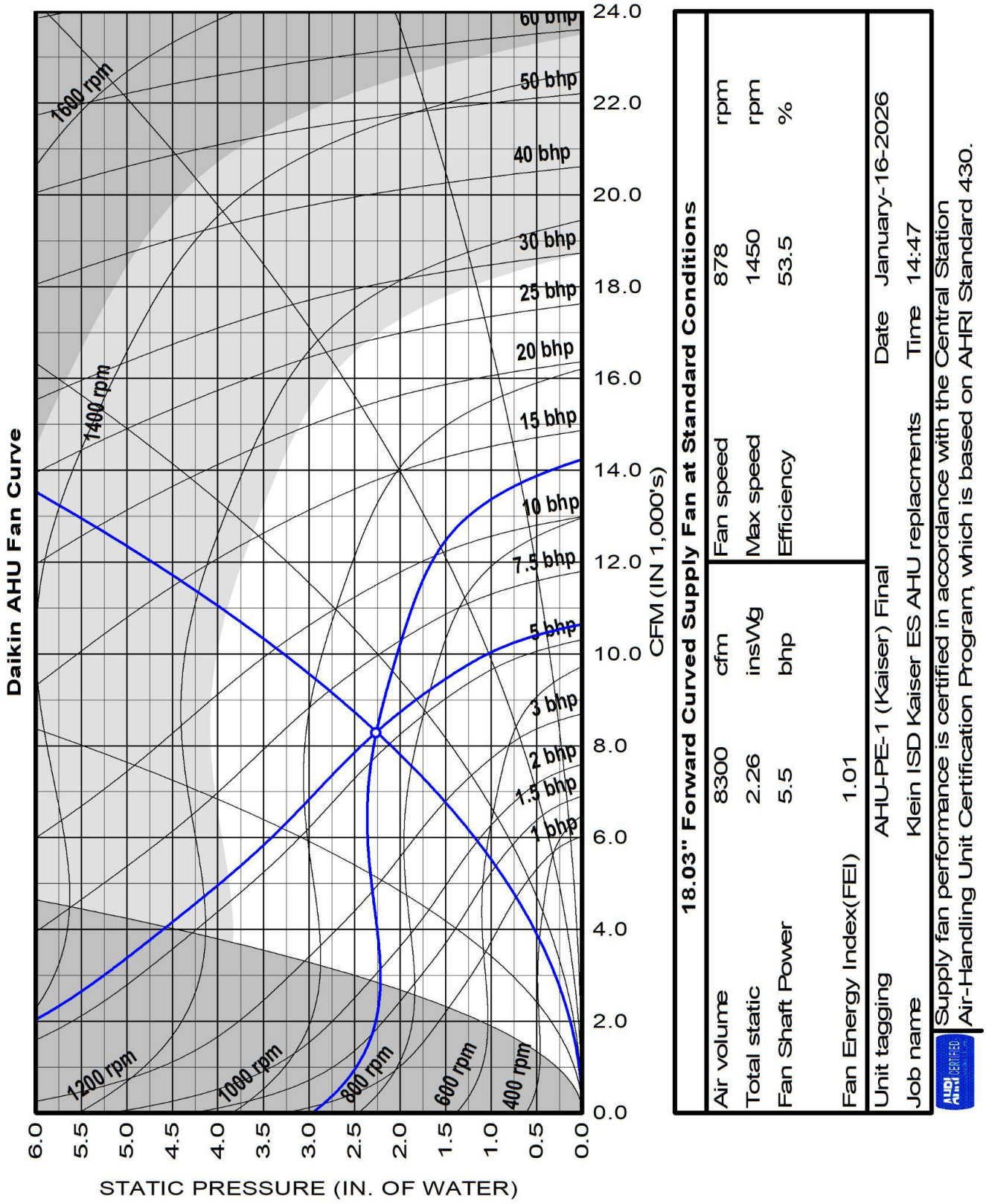

18.03" Forward Curved Supply Fan at Standard Conditions

Air volume	8300	cfm	Fan speed	878	rpm
Total static	2.26	insWg	Max speed	1450	rpm
Fan Shaft Power	5.5	bhp	Efficiency	53.5	%
Fan Energy Index(FEI)	1.01				

Unit tagging AHU-PE-1 (Kaiser) Final Date January-16-2026

Job name Klein ISD Kaiser ES AHU replacments Time 14:47

Supply fan performance is certified in accordance with the Central Station Air-Handling Unit Certification Program, which is based on AHRI Standard 430.

HTS Texas
3350 Yale Street
Houston, Texas 77018
P 832.328.1010
F 832.328.1460

SUBMITTAL DATA
APPROVAL REQUIRED

PROJECT	:	Klein ISD Klenk 2025 FRP
HTS JOB NUMBER	:	22513311 - MECH
SOLD TO	:	TBD
MECHANICAL CONSULTANT	:	Salas O'Brien
SHIPPING ADDRESS	:	TBD
HTS SALESPERSON	:	Matt McPherson
DATE	:	01/16/2026
REVISION NUMBER	:	00
SPECIFICATION SECTION	:	23 73 13
STANDARD LEAD TIME	:	

TAG	QTY	DESCRIPTION	MODEL	MANUFACTURER
AHU-PE-1	1	DX Air Handling Unit	Vision	Daikin Applied

APPROVAL STAMPS



SUBMITTAL DATA

Job Name	Klein ISD Klenk ES AHU replacements
For	
Sold To	
Prepared For	
Customer PO#	
Prepared By	Erick Beltran
Date	1/16/2026

Table of Contents

Daikin Section Divider 3

Technical Data Sheet - AHU-PE-1 (Klenk) Final 4

Drawing - AHU-PE-1 (Klenk) Final 9

Fan Curve - AHU-PE-1 (Klenk) Final 17


DAIKIN

Job Information	Technical Data Sheet
Job Name	Klein ISD Klenk ES AHU replacements
Date	January 16 2026
Submitted By	Salas O'Brien
Software Version	13.82
Unit Tag	AHU-PE-1 (Klenk) Final

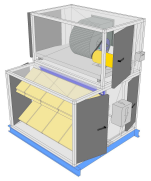

Unit Overview

Model Number	Supply					
	Air Volume cfm	Static Pressure		External Dimensions		
		External inWc	Total inWc	Height in	Width in	Length in
CAH020GDAM	8300	0.75	2.26	52*	78*	74**

**Not including base rails, coil connectors, drain connectors and control boxes.*

***Total lower deck length.*

Unit

Model Number:	CAH020GDAM		
Approval:	ETL Listed / ETL Listed to Canadian Safety Standards (ETL Label / ETLc Label)		
Outer Panel:	18 gauge G90 Galvanized Steel (unpainted)		
Liner:	24 gauge Galvanized Steel (unless noted per section)		
Insulation:	R-13 Injected Foam		
Unit Configuration:	Stacked / vertical	**Drive (Handling) Location:**	Right
Base:	6" formed channel	**Wall Thickness:**	2 in
Altitude:	0 ft	**Parts Warranty:**	Additional One Year, Two Year Total

Panel Filter

Component: 1 | Length: 30 in | Shipping Section: 1

Type	Efficiency	Nominal Face Velocity	Actual Face Velocity	Actual Face Area	Air Volume	Filter Loading
Pre Pleat	MERV 13	231 ft/min	232 ft/min	35.8 ft²	8300 cfm	Side

Air Pressure Drop				Number of Filters	Height	Width	Depth
Clean Air	Mean Air	Dirty Air	User Spec				
0.12 inWc	**0.56** inWc	1.00 inWc	N/A	3	24 in	24 in	2 in
				6	24 in	20 in	2 in
				3	24 in	12 in	2 in

Door

Location	Drive Side Door Width	Opp. Drv. Side Door Width	Opening
Both sides	26 in	26 in	Outward

Direct Expansion Coil	Component: 2	Length: 44 in	Shipping Section: 1

Coil Model	Total Capacity	Sensible Capacity	Number of Coils	Number of Rows	Fins per Inch	Tube Diameter	Tube Spacing (Face x Row)
4EJ1206B014	329633 Btu/hr	235924 Btu/hr	1	6	12	0.500 in	1.50 in x 1.299 in

Coil Operating Weight
575 lb

Air Volume	Air Temperature				Coil Air Pressure Drop	Finned Height	Finned Length	Face Area	Face Velocity
	Entering		Leaving						
	Dry Bulb	Wet Bulb	Dry Bulb	Wet Bulb					
8300 cfm	78.2 °F	65.2 °F	51.6 °F	51.3 °F	0.82 insWg	42.50 in	65.00 in	19.18 ft²	433 ft/min

Fluid		Sub-Cooled Refrigerant Liquid Temp.	Suction Vapor Superheat Temp. at Coil Outlet	Design Saturated Condensing Temp.	Total Refrigerant Weight	Total Coil Volume
Suction Temp.	Refrigerant					
45.0 °F	R32	110.0 °F	8.0 °F	110.0 °F	10.00 lb	1.64 ft³

Connection [Data Per Coil]					Min. Fin Surface Temp.	Min. Tube Wall Surface Temp.
Type	Liquid [Qty - Size]	Suction [Qty - Size]	Location	Material		
OD Sweat	2-0.875 in	2-1.375 in	Drive side	Copper tube	32.0 °F	32.0 °F

Material				Drain Pan	Drain Side
Fin	Tube	Header	Case		
Aluminum .0075 in	Copper .020 in	Copper	Stainless steel	Stainless steel	Drive side

Control Panel

Location:	Factory Installed	**Voltage:**	120
Height x Width x Depth:	16.00 in x 12.00 in x 9.00 in	**MCA:**	2A
Equipment:	Leak Detection	**MOP:**	10A
Enclosure:	NEMA 3	**Wiring Harness:**	Factory Wired

Total Refrigerant Weight is the total for all circuits of all coils in this coil section and is estimated. Refer to the AHU and Condensing Unit IOMs for recommendations on system start-up.

Minimum allowable face velocity = 150 fpm

80% liquid to 20% vapor is the assumption used for the charge calculation.

Volume includes coil fin pack and header.

Harness is wired from refrigerant sensor to the refrigerant detection control panel. A separate field connection is required for 120V power.

AHRI 410 Certification

Coil is NOT certified by AHRI

Door

Location	Drive Side Door Width	Opp. Drv. Side Door Width	Opening
Both sides	18 in	28 in	Outward

Supply Fan

Component: 3 | Length: 46 in | Shipping Section: 2

Fan Performance

Air Volume	Static Pressure			Fan Energy Index(FEI)	Total Input Power	Fan Shaft Power	Fan Wheel Speed		Outlet Velocity
	External	Total	Cabinet				Operating	Maximum	
8300 cfm	0.75 inWc	2.26 inWc	0.13 inWc	1.01	5.2 kW	5.51 BHP	878 rpm	1450 rpm	2872 ft/min

Fan Data

Fan Type	Blade Type / Class	Quantity of Fans	Wheel Diameter	Number of Blades	Discharge	Motor Location
Centrifugal DWDI	Forward Curved / 2	1	18.03 in	N/A	Top horizontal	To Side of Fan

Motor Data

Power	Electrical Supply	Speed	Efficiency	Enclosure	Frame Size	Supplier	Number of Poles	Lock Rotor Current	Full Load Current
10.0 HP	460/60/3 V/Hz/Phase	1750 rpm	Premium	TEFC	215 T frame	Generic	4	106.62 A	12.50 A

Fan Options

Shaft Grounding Kit:	Provided	**Isolator Type:**	Spring

Drive Package Data*

Fan Sheave	Motor Sheave	Belt	Number of Belts	Actual Drive S.F.	Bearing Type
2B5V94	2BK52H	BX46	2	1.32	Standard - L50 (200K)

**Daikin Applied reserves the right to provide a different but equivalent drive package*

VFD/Starter/Disconnect Data

Selection Type:	External J-Box	**Vendor:**	Factory Standard
Voltage:	460 V	**Height x Width x Depth:**	6.00 in x 6.00 in x 4.00 in
Mounting:	Door Side	**Enclosure:**	NEMA 1

Door

Location	Drive Side Door Width	Opp. Drv. Side Door Width	Opening
Both sides	30 in	30 in	Outward

Unit Sound Power (dB)

Type	63 Hz	125 Hz	250 Hz	500 Hz	1000 Hz	2000 Hz	4000 Hz	8000 Hz
Radiated:	73	73	63	62	57	49	46	51
Unit Discharge:	83	83	81	83	79	77	74	69
Unit Return:	78	77	74	76	71	69	64	57

Shipping Section Details

Section	Length in	Weight lb	Corner Weights (lb)				Center of Gravity (in)		
			P1	P2	P3	P4	XX	YY	ZZ
1	74	1646	405	383	418	441	39	38	28
2	46	1056	324	229	204	299	22	32	22
Entire Unit	**74** *Lower level only*	**2702**	**n/a**	**n/a**	**n/a**	**n/a**	**n/a**	**n/a**	**n/a**

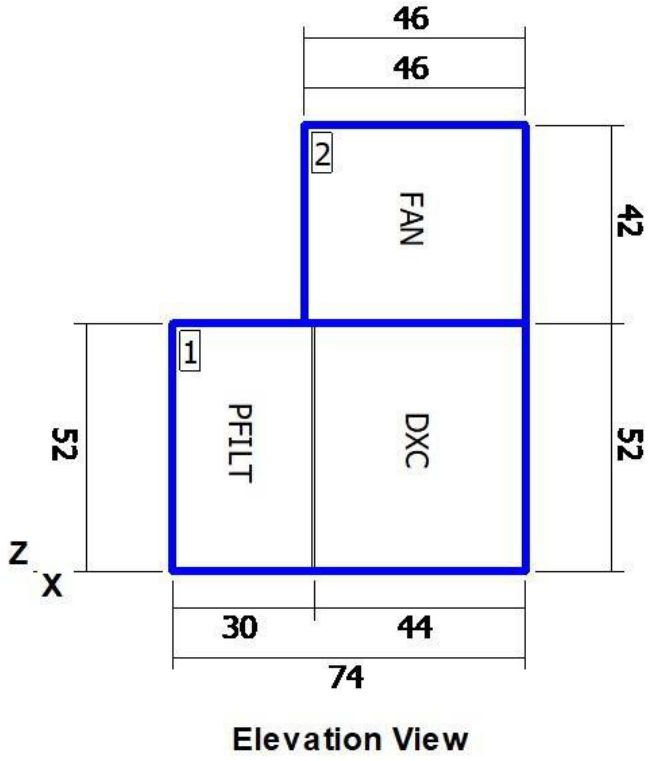

Elevation View

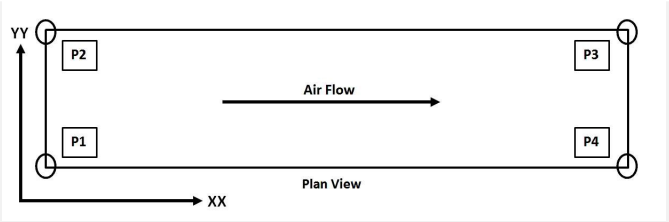

NOTE: Special components aren't included in the corner weights and center of gravity data.

Shipping Protection	None

Supply Static Pressure Drop

Component	Option	Static Pressure Drop
Panel Filter	Panel Filter	0.56 insWg
DX Coil	DX Coil	0.82 insWg
Supply Fan	Cabinet	0.13 insWg
External Static	External Static	0.75 insWg
Total Supply Fan Static		2.26 insWg

Minimum Recommended Drain Pan Trap Dimensions

Shipping Section	Component	H
1	DX Coil	3.26

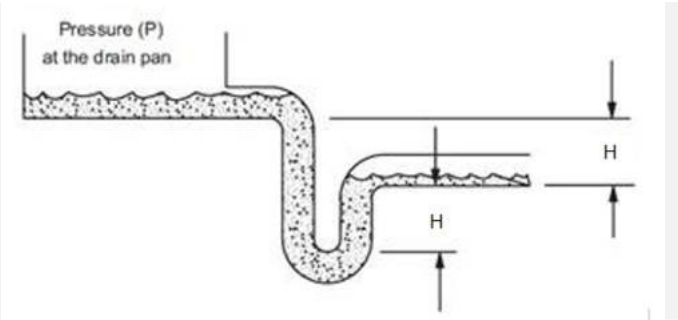

Dimensions provided as a courtesy and are recommended minimums only. Daikin is not responsible for supplying or designing drain pan traps and is not responsible for any damage caused by incorrect trap heights. The dimensions listed above should be reviewed and approved by a licensed plumbing professional.

AHRI Certification

Certified by the AHRI Central Station Air-Handling Unit (AHU) Certification Program, which is based on AHRI Standard 430/431. AHRI certified units are subject to rigorous and continuous testing, have performance ratings independently measured and are third-party verified. Certified units may be found in the AHRI Directory at www.ahridirectory.org.

Notes

Standard
1. As a standalone component, unit meets or exceeds requirements of ASHRAE 90.1 - 2007. The approving authority is responsible for compliance of multi - component building systems.

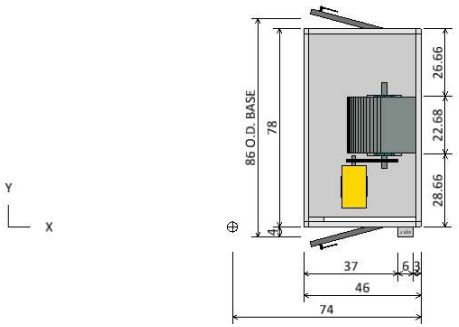

TOP DECK PLAN VIEW

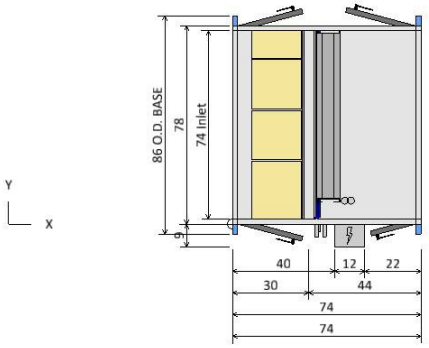

BOTTOM DECK PLAN VIEW

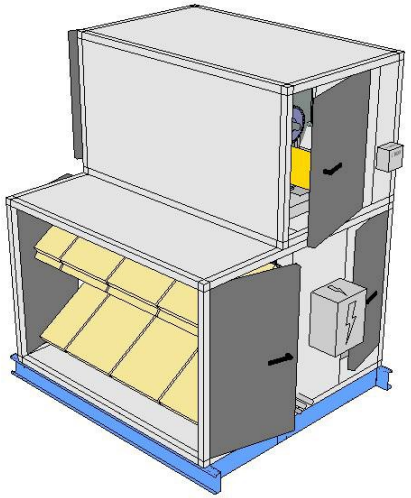

ISOMETRIC VIEW

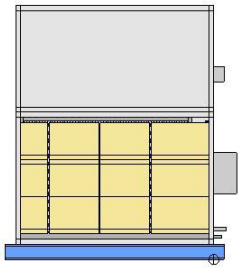

FRONT END VIEW

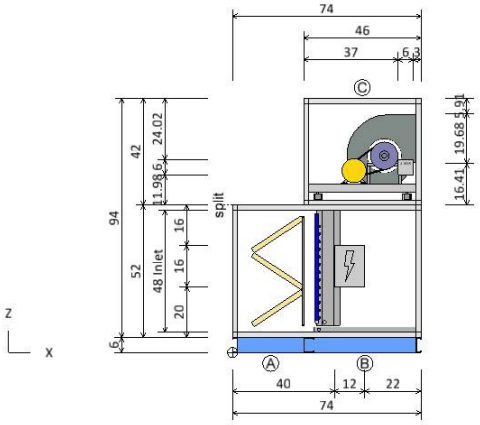

ELEVATION VIEW

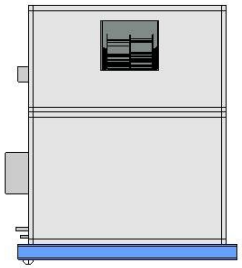

REAR END VIEW

Product Drawing	Unit Tag: AHU-PE-1 (Klenk) Final			Sales Office: HTS Texas		
Product: Vision Air Handler	Project Name: Klein ISD Klenk ES AHU replacements			Sales Engineer:		
Model: CAH020GDAM	Jan. 16, 2026	Ver/Rev:	Sheet: 1 of 1	Scale: NTS	Tolerance: +/-0.25"	Dwg Units: in

DAIKIN
13600 Industrial Park Blvd, Minneapolis, MN 55441
www.DaikinApplied.com Software Version: 13.82

All opening dimensions have a 1" mounting flange along the inner edge. The actual airflow area of the opening is 2" smaller in each dimension.

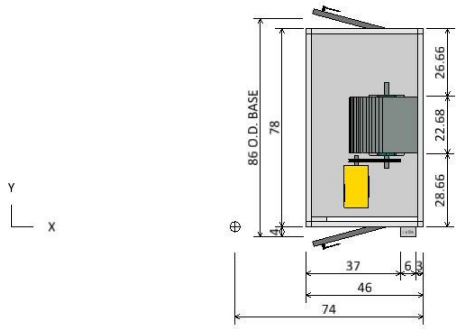

TOP DECK PLAN VIEW

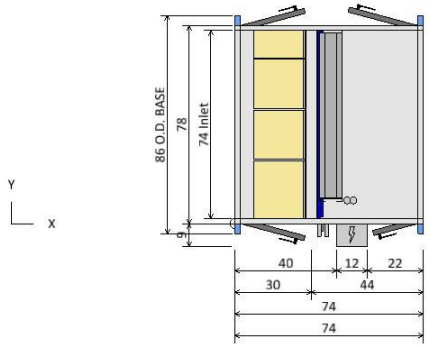

BOTTOM DECK PLAN VIEW

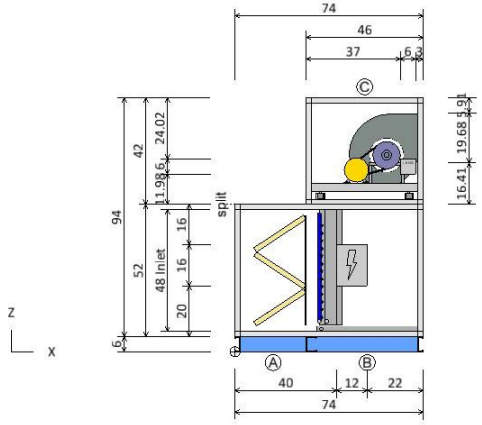

ELEVATION VIEW

Component Key		
Ⓐ	Panel Filter	
	Filter Type:	PrePleat (MERV 13)
	Right Door (WxH):	26 ins x 48 ins
	Left Door (WxH):	26 ins x 48 ins
Ⓑ	DX Coil	
	Coil Model:	4EJ1206B014
	Total Capacity:	329633.0 Btu/hr
	Right Door (WxH):	18 ins x 42 ins
	Left Door (WxH):	28 ins x 42 ins
Ⓒ	Supply Fan	
	Fan Type:	Centrifugal DWDI
	Fan Size (Class):	18 (2)
	Air Flowrate:	8300.0 cfm
	T.S.P:	2.3 insWg
	Motor Power:	10.0 HP
	Right Door (WxH):	30 ins x 38 ins
	Left Door (WxH):	30 ins x 38 ins

Product Drawing	Unit Tag: AHU-PE-1 (Klenk) Final			Sales Office: HTS Texas		
Product: Vision Air Handler	Project Name: Klein ISD Klenk ES AHU replacements			Sales Engineer:		
Model: CAH020GDAM	Jan. 16, 2026	Ver/Rev:	Sheet: 1 of 1	Scale: NTS	Tolerance: +/-0.25"	Dwg Units: in

DAIKIN
13600 Industrial Park Blvd, Minneapolis, MN 55441
www.DaikinApplied.com Software Version: 13.82

All opening dimensions have a 1" mounting flange along the inner edge. The actual airflow area of the opening is 2" smaller in each dimension.

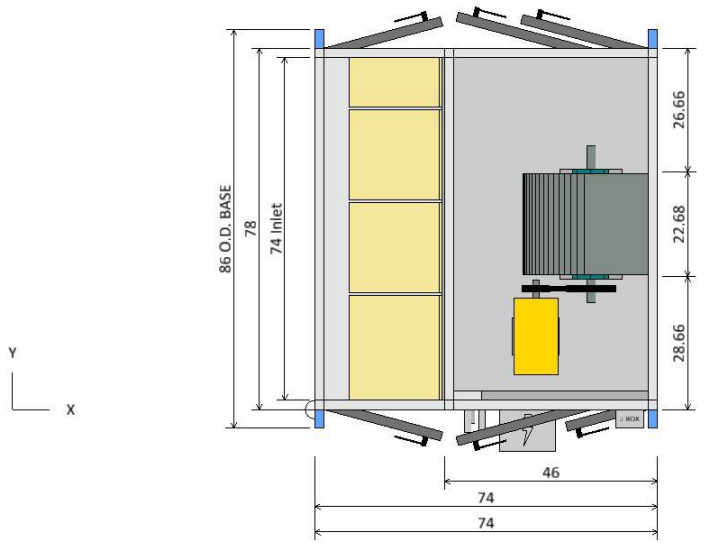

PLAN VIEW

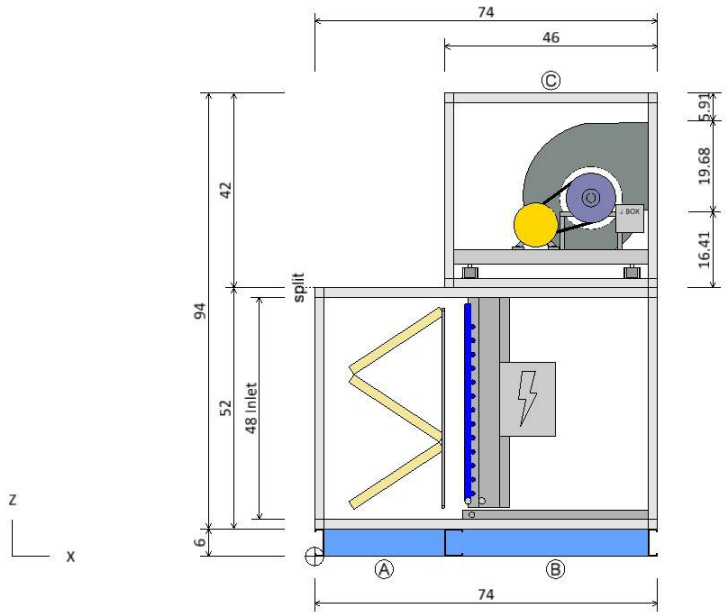

ELEVATION VIEW

Component Key

	Type	X	Y	Z	Wid	Hgt
Ⓐ	Panel Filter Opening	0.00	2.00	8.00	74.00	48.00
Ⓒ	Supply Fan Fan Discharge	74.00	34.66	74.41	22.68	19.68

Note: Dimensions are measured from the origin point.
Note: Openings with or without dampers are recessed into the unit by approximately 1.75 in.

Opening/Damper Connections	Unit Tag: AHU-PE-1 (Klenk) Final			Sales Office: HTS Texas		
Product: Vision Air Handler	Project Name: Klein ISD Klenk ES AHU replacements			Sales Engineer:		
Model: CAH020GDAM	Jan. 16, 2026	Ver/Rev:	Sheet: 1 of 1	Scale: NTS	Tolerance: +/-0.25"	Dwg Units: in

DAIKIN
13600 Industrial Park Blvd, Minneapolis, MN 55441
www.DaikinApplied.com Software Version: 13.82

All opening dimensions have a 1" mounting flange along the inner edge. The actual airflow area of the opening is 2" smaller in each dimension.

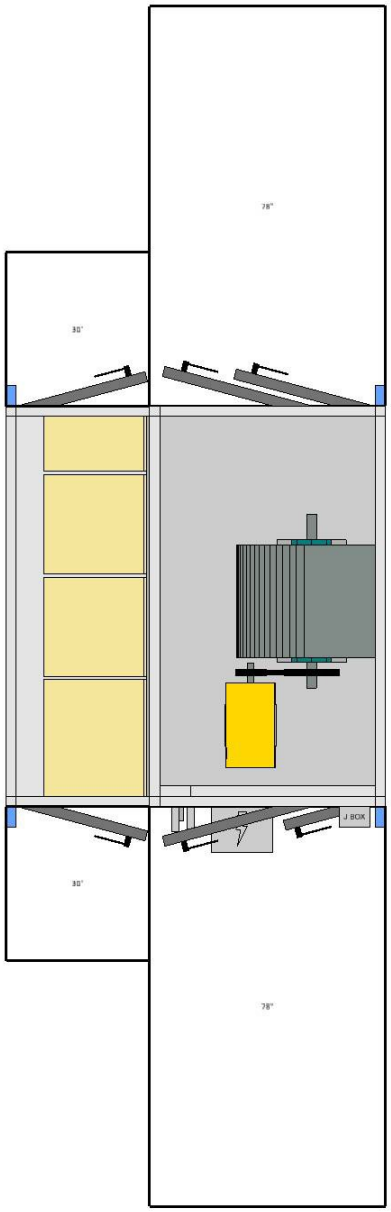

PLAN VIEW

Notes
Check local electrical component service clearance codes for specific distances. Access is only required on one side of the unit.

Service Clearance View	Unit Tag: AHU-PE-1 (Klenk) Final			Sales Office: HTS Texas		
Product: Vision Air Handler	Project Name: Klein ISD Klenk ES AHU replacements			Sales Engineer:		
Model: CAH020GDAM	Jan. 16, 2026	Ver/Rev:	Sheet: 1 of 1	Scale: NTS	Tolerance: +/-0.25"	Dwg Units: in

DAIKIN
13600 Industrial Park Blvd, Minneapolis, MN 55441
www.DaikinApplied.com Software Version: 13.82

All opening dimensions have a 1" mounting flange along the inner edge. The actual airflow area of the opening is 2" smaller in each dimension.

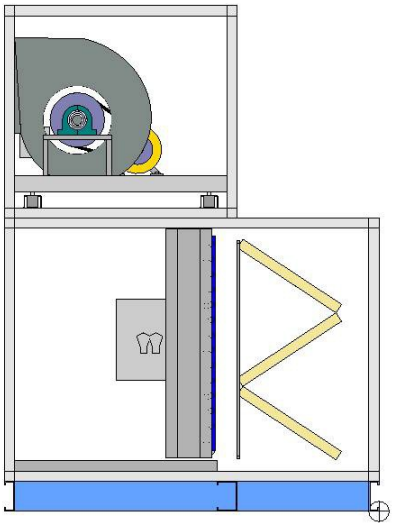

LEFT ELEVATION VIEW

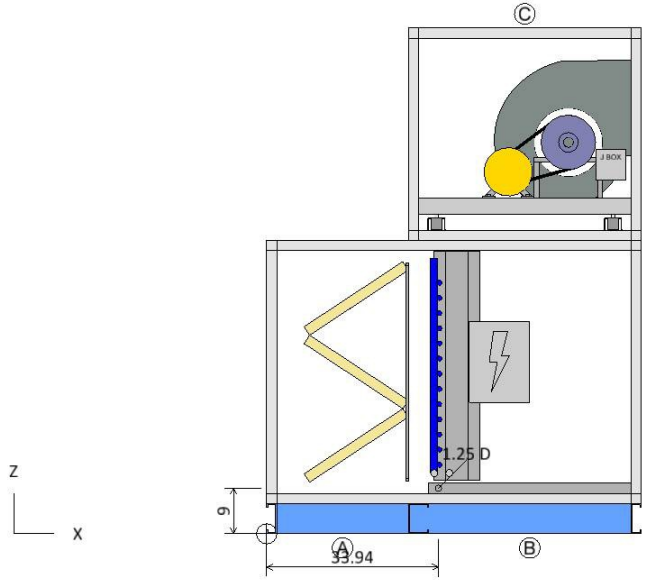

RIGHT ELEVATION VIEW

Coil and Drain Connections

	Type	X	Y	Z	Diam
	DX Coil Condensate drain conn:	33.94	-2.90	9.00	1.25
Ⓑ	DX suction:	TBD	TBD	TBD	2- 1.38
	DX liquid conn:	TBD	TBD	TBD	2- 1.38
	DX liquid conn:	TBD	TBD	TBD	2- 0.88

Note: Dimensions are measured from the origin point.

Coil and Drain Connections	Unit Tag: AHU-PE-1 (Klenk) Final			Sales Office: HTS Texas		
Product: Vision Air Handler	Project Name: Klein ISD Klenk ES AHU replacements			Sales Engineer:		
Model: CAH020GDAM	Jan. 16, 2026	Ver/Rev:	Sheet: 1 of 1	Scale: NTS	Tolerance: +/-0.25"	Dwg Units: in

DAIKIN
13600 Industrial Park Blvd, Minneapolis, MN 55441
www.DaikinApplied.com Software Version: 13.82

All opening dimensions have a 1" mounting flange along the inner edge. The actual airflow area of the opening is 2" smaller in each dimension.

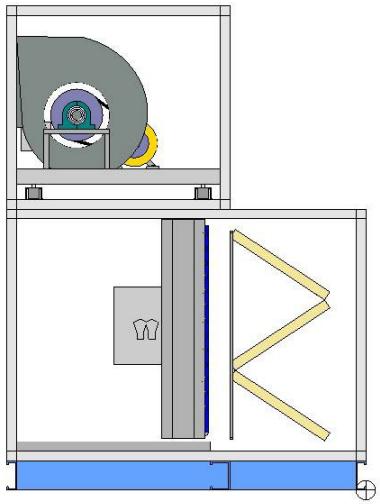

LEFT ELEVATION VIEW

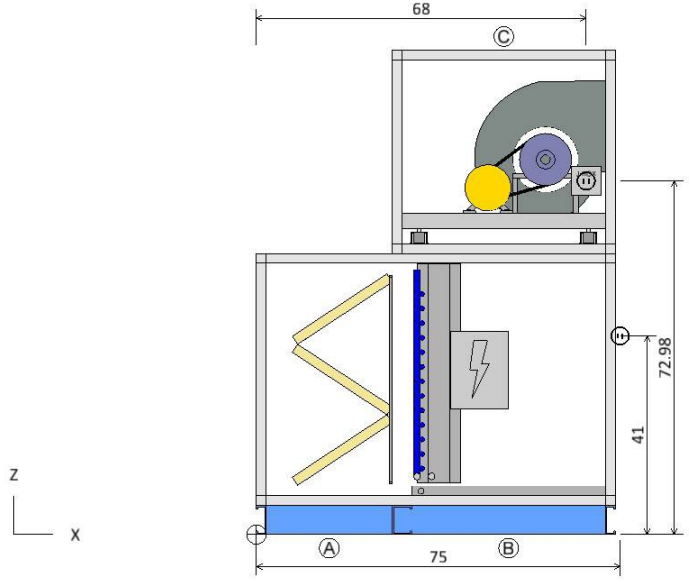

RIGHT ELEVATION VIEW

Component Key

	Type	X	Y	Z	Volts	Phase
Ⓑ	DX Coil DX Control Panel	75.00	0.00	41.00	120	1
Ⓒ	Supply Fan Fan	68.00	0.00	72.98	460	3

Note: Dimensions are measured from the origin point.

Electrical Connections	Unit Tag: AHU-PE-1 (Klenk) Final			Sales Office: HTS Texas		
Product: Vision Air Handler	Project Name: Klein ISD Klenk ES AHU replacements			Sales Engineer:		
Model: CAH020GDAM	Jan. 16, 2026	Ver/Rev:	Sheet: 1 of 1	Scale: NTS	Tolerance: +/-0.25"	Dwg Units: in

DAIKIN
13600 Industrial Park Blvd, Minneapolis, MN 55441
www.DaikinApplied.com Software Version: 13.82

All opening dimensions have a 1" mounting flange along the inner edge. The actual airflow area of the opening is 2" smaller in each dimension.

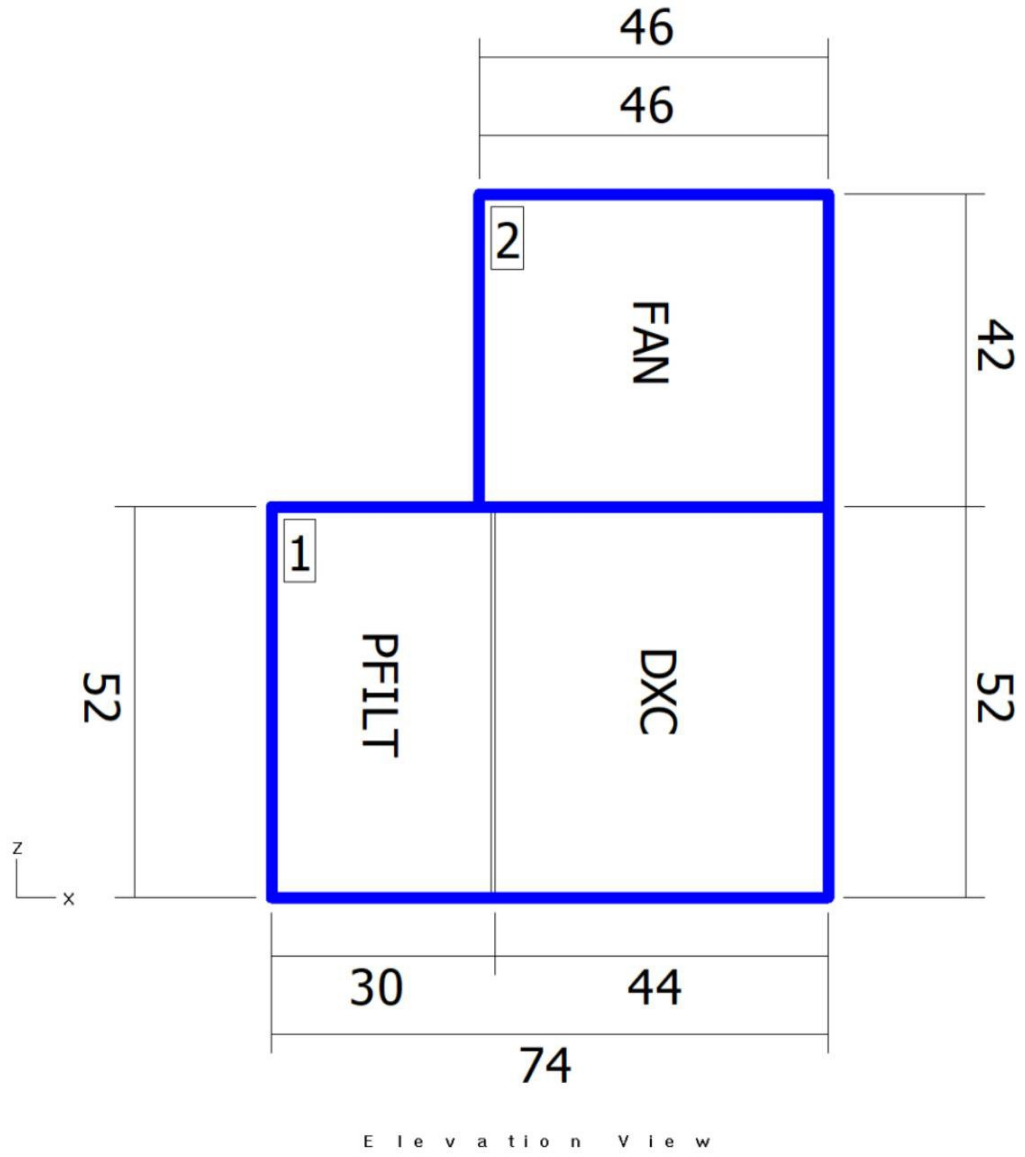

Elevation View

Shipping Sections

Section	Weight (lb)	X	Y	Z
Section 1	1646.48	74	78	52
Section 2	1056.42	46	78	42
Total Unit	2702.90	74	78	94

Note: Base rails, curb ready base, coil connectors, drain connectors, and control boxes not included in height X, Y, Z dimensions. Shipping section may be 2" longer in air flow direction due to internal splice joint.

Shipping Sections	Unit Tag: AHU-PE-1 (Klenk) Final			Sales Office: HTS Texas		
Product: Vision Air Handler	Project Name: Klein ISD Klenk ES AHU replacements			Sales Engineer:		
Model: CAH020GDAM	Jan. 16, 2026	Ver/Rev:	Sheet: 1 of 1	Scale: NTS	Tolerance: +/-0.25"	Dwg Units: in

DAIKIN
13600 Industrial Park Blvd, Minneapolis, MN 55441
www.DaikinApplied.com Software Version: 13.82

All opening dimensions have a 1" mounting flange along the inner edge. The actual airflow area of the opening is 2" smaller in each dimension.

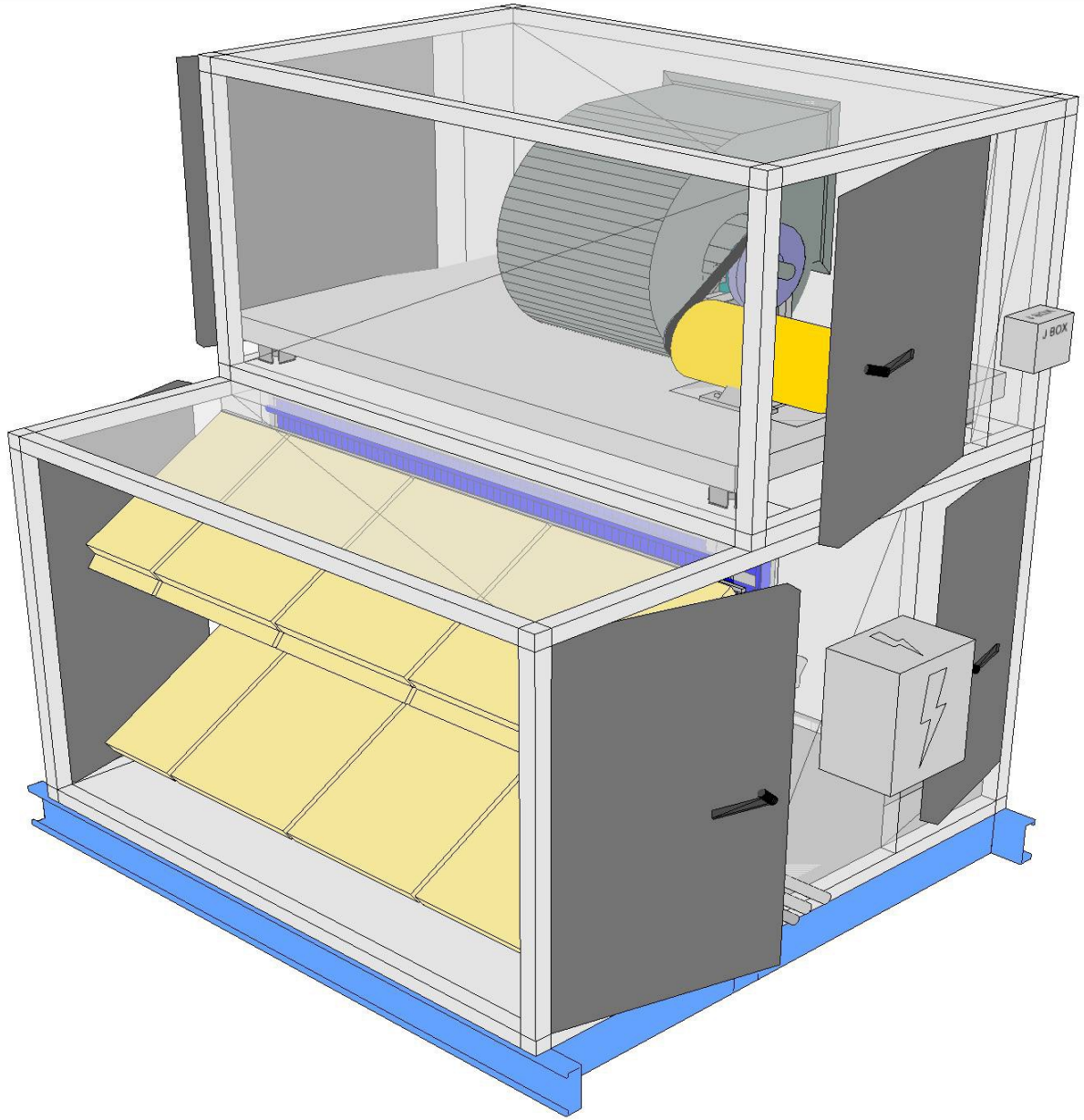

Product Drawing	Unit Tag: AHU-PE-1 (Klenk) Final			Sales Office: HTS Texas			DAIKIN
Product: Vision Air Handler	Project Name: Klein ISD Klenk ES AHU replacements			Sales Engineer:			13600 Industrial Park Blvd, Minneapolis, MN 55441
Model: CAH020GDAM	Jan. 16, 2026	Ver/Rev:	Sheet: 1 of 1	Scale: NTS	Tolerance: +/-0.25"	Dwg Units: in	www.DaikinApplied.com Software Version: 13.82

All opening dimensions have a 1" mounting flange along the inner edge. The actual airflow area of the opening is 2" smaller in each dimension.

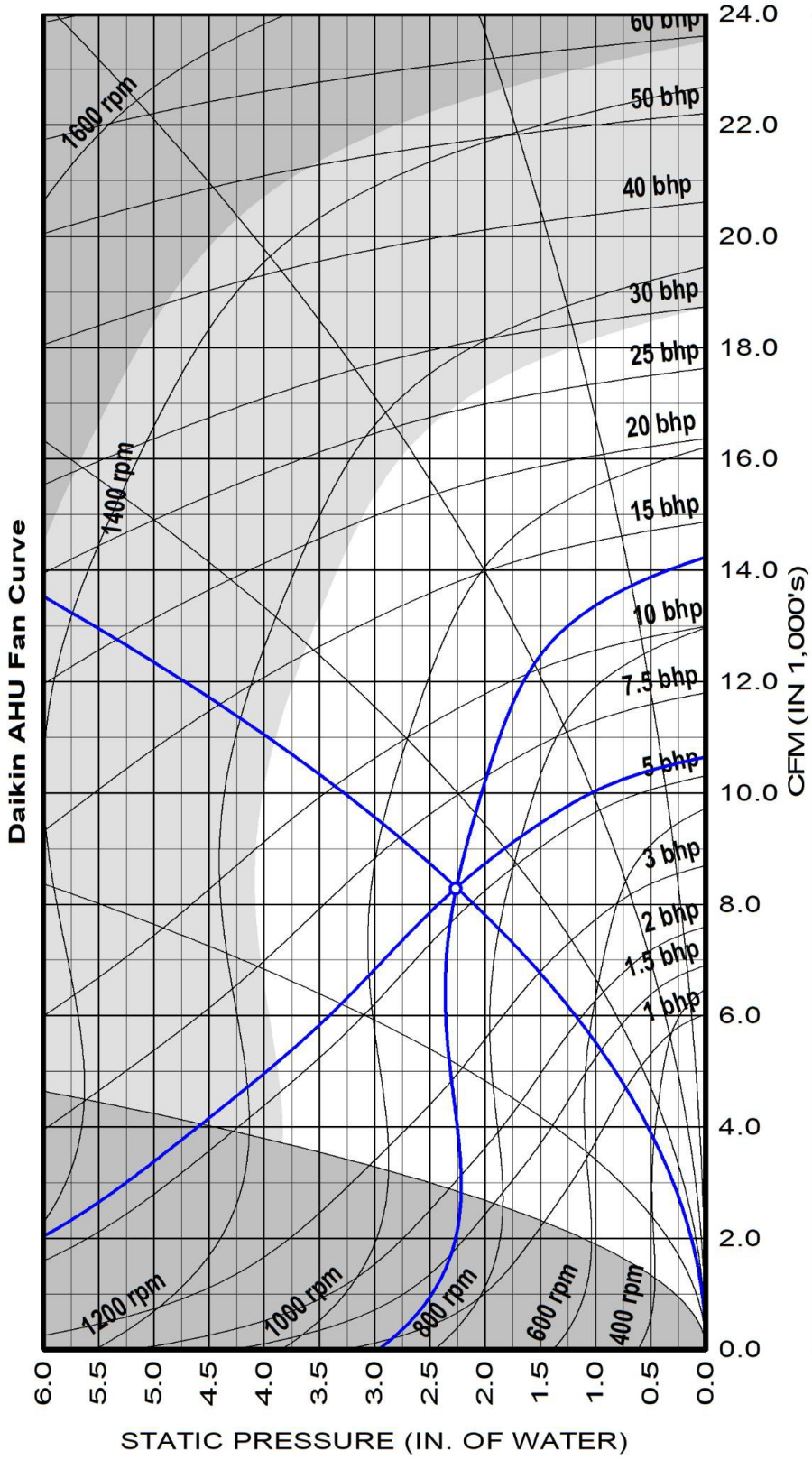

18.03" Forward Curved Supply Fan at Standard Conditions

Air volume	8300	cfm	Fan speed	878	rpm
Total static	2.26	insWg	Max speed	1450	rpm
Fan Shaft Power	5.5	bhp	Efficiency	53.5	%
Fan Energy Index(FEI)	1.01				

Unit tagging	AHU-PE-1 (Klenk) Final	Date	January-16-2026
Job name	Klein ISD Klenk ES AHU replacements	Time	16:04

Supply fan performance is certified in accordance with the Central Station Air-Handling Unit Certification Program, which is based on AHRI Standard 430.

HTS Texas
3350 Yale Street
Houston, Texas 77018
P 832.328.1010
F 832.328.1460

SUBMITTAL DATA
APPROVAL REQUIRED

PROJECT	:	Klein ISD Klenk 2025 FRP
HTS JOB NUMBER	:	22513311 - MECH
SOLD TO	:	TBD
MECHANICAL CONSULTANT	:	Salas O'Brien
SHIPPING ADDRESS	:	TBD
HTS SALESPERSON	:	Matt McPherson
DATE	:	12/01/2025
REVISION NUMBER	:	00
SPECIFICATION SECTION	:	23 73 13
STANDARD LEAD TIME	:	

TAG	QTY	DESCRIPTION	MODEL	MANUFACTURER
AHU-LOT	11	Air Handling Unit	Vision	Daikin Applied

APPROVAL STAMPS



SUBMITTAL DATA

Job Name	Klein ISD Klenk ES AHU replacements
For	
Sold To	
Prepared For	
Customer PO#	
Prepared By	Erick Beltran
Date	1/17/2026

Table of Contents

Daikin Section Divider 4

Technical Data Sheet - AHU-1 (Klenk) 5

Drawing - AHU-1 (Klenk) 10

Fan Curve - AHU-1 (Klenk) 18

Technical Data Sheet - AHU-1 Filter 19

Drawing - AHU-1 Filter 21

Technical Data Sheet - AHU-2 (Klenk) Final 28

Drawing - AHU-2 (Klenk) Final 33

Fan Curve - AHU-2 (Klenk) Final 41

Technical Data Sheet - AHU-3 (Klenk) Final 42

Drawing - AHU-3 (Klenk) Final 46

Fan Curve - AHU-3 (Klenk) Final 54

Technical Data Sheet - AHU-5 (Klenk) 55

Drawing - AHU-5 (Klenk) 60

Fan Curve - AHU-5 (Klenk) 68

Technical Data Sheet - AHU-5 Filter 69

Drawing - AHU-5 Filter 71

Technical Data Sheet - AHU-6 (Klenk) 78

Drawing - AHU-6 (Klenk) 83

Fan Curve - AHU-6 (Klenk) 91

Technical Data Sheet - AHU-6 Filter 92

Drawing - AHU-6 Filter 94

Technical Data Sheet - AHU-7 (Klenk) 101

Drawing - AHU-7 (Klenk) 106

Fan Curve - AHU-7 (Klenk) 113

Technical Data Sheet - AHU-7 Filter 114

Drawing - AHU-7 Filter 116

Technical Data Sheet - AHU-8 (Klenk) Final 123

Drawing - AHU-8 (Klenk) Final 127

Fan Curve - AHU-8 (Klenk) Final 135

Technical Data Sheet - AHU-9 (Klenk) 136

Drawing - AHU-9 (Klenk) 141

Fan Curve - AHU-9 (Klenk) 148

Technical Data Sheet - AHU-9 Filter 149

Drawing - AHU-9 Filter 151

Technical Data Sheet - AHU-10 (Klenk) 158

Drawing - AHU-10 (Klenk) 163

Table of Contents

Fan Curve - AHU-10 (Klenk) 171

Technical Data Sheet - AHU-11 (Klenk) 172

Drawing - AHU-11 (Klenk) 177

Fan Curve - AHU-11 (Klenk) 185

Technical Data Sheet - AHU-12 (Klenk) 186

Drawing - AHU-12 (Klenk) 191

Fan Curve - AHU-12 (Klenk) 199


DAIKIN

Job Information	Technical Data Sheet
Job Name	Klein ISD Klenk ES AHU replacements
Date	January 17 2026
Submitted By	Salas O'Brien
Software Version	13.91
Unit Tag	AHU-1 (Klenk)

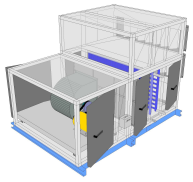

Unit Overview

Model Number	Supply					
	Air Volume cfm	Static Pressure		External Dimensions		
		External inWc	Total inWc	Height in	Width in	Length in
CAH011GMAM	5270	0.95	2.28	40*	64*	96

**Not including base rails, coil connectors, drain connectors and control boxes.*

Unit

Model Number:	CAH011GMAM		
Approval:	ETL Listed / ETL Listed to Canadian Safety Standards (ETL Label / ETLc Label)		
Outer Panel:	18 gauge G90 Galvanized Steel (unpainted)		
Liner:	24 gauge Galvanized Steel (unless noted per section)		
Insulation:	R-13 Injected Foam		
Unit Configuration:	Multizone	**Drive (Handling) Location:**	Right
Base:	4" formed channel	**Wall Thickness:**	2 in
Altitude:	0 ft	**Parts Warranty:**	Additional One Year, Two Year Total

Supply Fan	Component: 1	Length: 42 in	Shipping Section: 1

Fan Performance

Air Volume	Static Pressure			Fan Energy Index(FEI)	Total Input Power	Fan Shaft Power	Fan Wheel Speed		Outlet Velocity
	External	Total	Cabinet				Operating	Maximum	
5270 cfm	0.95 inWc	2.28 inWc	0.31 inWc	1.01	3.4 kW	3.57 BHP	1078 rpm	1725 rpm	2546 ft/min

Fan Data

Fan Type	Blade Type / Class	Quantity of Fans	Wheel Diameter	Number of Blades	Discharge	Motor Location
Centrifugal DWDI	Forward Curved / 2	1	15.00 in	N/A	Top horizontal	To Side of Fan

Motor Data

Power	Electrical Supply	Speed	Efficiency	Enclosure	Frame Size	Supplier	Number of Poles	Lock Rotor Current	Full Load Current
7.5 HP	460/60/3 V/Hz/Phase	1750 rpm	Premium	TEFC	213 T frame	Generic	4	70.56 A	9.50 A

Fan Options

Shaft Grounding Kit:	Provided	Isolator Type:	Spring

Drive Package Data*

Fan Sheave	Motor Sheave	Belt	Number of Belts	Actual Drive S.F.	Bearing Type
2BK62H	2BK36H	BX32	2	1.12	Extended - L50 (500K)

**Daikin Applied reserves the right to provide a different but equivalent drive package*

VFD/Starter/Disconnect Data

Selection Type:	External J-Box	Vendor:	Factory Standard
Voltage:	460 V	Height x Width x Depth:	6.00 in x 6.00 in x 4.00 in
Mounting:	Door Side	Enclosure:	NEMA 1

Door

Location	Drive Side Door Width	Opp. Drv. Side Door Width	Opening
Both sides	26 in	30 in	Outward

Special Options

Sound Baffle	Static Pressure
(As casing details)	0.31 inWc

Two Deck Multizone

Component: 2 | Length: 54 in | Shipping Section: 2 & 3

Discharge Location	Number of Zones	Multizone APD*	Damper Type	Actuation
Horizontal / Horizontal	7	1.02 inWc	Low leak / Low leak	None - damper mechanically linked

Note : includes coil & balance plate & diffuser

Note : Cabinet height for multizone extends 26 inches above 'External cabinet height' referenced above.
The damper assembly will add 8.38 inches to the cabinet length for horizontal discharge and 8.38 inches to the height for vertical discharge.

Cold Deck Coil

Coil Model	Total Capacity	Sensible Capacity	Number of Coils	Number of Rows	Fins per Inch	Tube Diameter	Tube Spacing (Face x Row)
5WH1206B	199407 Btu/hr	145906 Btu/hr	1	6	12	0.625 in	1.50 in X 1.299 in

Coil Operating Weight	Coil Dry Weight
306 lb	230 lb

Air Volume	Air Temperature				Coil Air Pressure Drop	Finned Height	Finned Length	Face Area	Face Velocity
	Entering		Leaving						
	Dry Bulb	Wet Bulb	Dry Bulb	Wet Bulb					
5270 cfm	77.9 °F	65.0 °F	52.6 °F	52.2 °F	0.79 inWc	30 in	51 in	10.62 ft²	496 ft/min

Water

Entering	Leaving	Flow Rate	Pressure Drop	Velocity	Fluid Volume	Fluid Weight
45.0 °F	55.1 °F	39.40 gpm	14.90 ftHd	4.20 ft/s	9.0 gal	76.00 lb

Connection [Data Per Coil]				Min. Fin Surface Temp.	Min. Tube Wall Surface Temp.	Fouling Factor
Type	Size	Location	Material			
Threaded	1.50 in	Drive side	Carbon steel	45.0 °F	45.0 °F	0.000

Material				Drain Pan	Drain Side	Electro-Fin Coat	Moisture Eliminator
Fin	Tube	Header	Case				
Aluminum .0075 in	Copper .020 in	Copper	Stainless steel	Stainless steel	Drive side	NA	NA

AHRI 410 Certification

Certified in accordance with the AHRI Forced-Circulation Air-Cooling and Air-Heating Coils Certification Program which is based on AHRI Standard 410 within the Range of Standard Rating Conditions listed in Table 1 of the Standard. Certified units may be found in the AHRI Directory at www.ahridirectory.org

Future Hot Deck Coil(54 ins)

Number of Coils	Number of Rows
1	1

Coil Air Pressure Drop	Finned Height	Finned Width	Face Area	Face Velocity
NA inWc	18 in	48 in	6.00 ft²	878 ft/min

Connection Location	Connection Material
Drive side	Carbon steel

Coil Model	Drain Pan	Drain Pan Side
Future Coil (Not Supplied)	NA	NA

AHRI 410 Certification

Coil is NOT certified by AHRI

Door

Location	Drive Side Door Width	Opp. Drv. Side Door Width	Opening
Both sides	18 in	18 in	Outward

Unit Sound Power (dB)

Type	63 Hz	125 Hz	250 Hz	500 Hz	1000 Hz	2000 Hz	4000 Hz	8000 Hz
Radiated:	73	75	67	62	59	49	46	51
Unit Discharge:	83	85	85	83	81	77	77	72
Unit Return:	80	82	82	80	78	74	74	69

Shipping Section Details

Section	Length in	Weight lb	Corner Weights (lb)				Center of Gravity (in)		
			P1	P2	P3	P4	XX	YY	ZZ
1	42	884	269	185	173	256	20	26	18
2	54	938	215	201	254	268	30	31	20
3	54	426	191	176	162	178	26	31	18
Entire Unit	**96**	**2248**	**625**	**512**	**639**	**753**	**53**	**29**	**30**



Elevation View

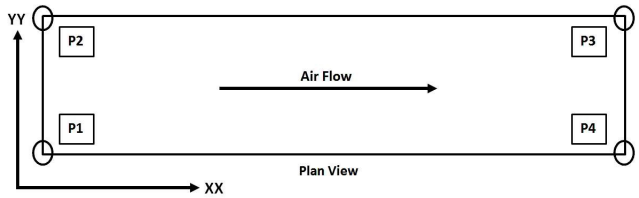

NOTE: Special components aren't included in the corner weights and center of gravity data.

Shipping Protection	None

Supply Static Pressure Drop

Component	Option	Static Pressure Drop
Supply Fan	Cabinet	
Supply Fan	Special	0.31 insWg
Multizone	Multizone	1.02 insWg
External Static	External Static	0.95 insWg
Total Supply Fan Static		2.28 insWg

Minimum Recommended Drain Pan Trap Dimensions

Shipping Section	Component	H
2	Chilled Water coil	1.56

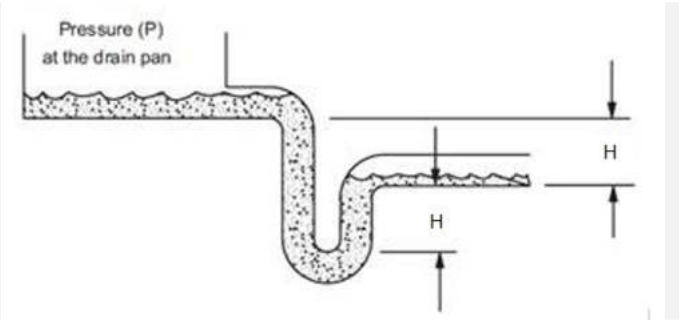

Dimensions provided as a courtesy and are recommended minimums only. Daikin is not responsible for supplying or designing drain pan traps and is not responsible for any damage caused by incorrect trap heights. The dimensions listed above should be reviewed and approved by a licensed plumbing professional.

This calculation is based on an assumption that 0.25 inches of the external static pressure is in the return duct and the remainder is in the supply duct. If actual conditions vary from this assumption then contact Applications for new trap height recommendations.

AHRI Certification

Certified by the AHRI Central Station Air-Handling Unit (AHU) Certification Program, which is based on AHRI Standard 430/431. AHRI certified units are subject to rigorous and continuous testing, have performance ratings independently measured and are third-party verified. Certified units may be found in the AHRI Directory at www.ahridirectory.org.

Notes

Standard
1. As a standalone component, unit meets or exceeds requirements of ASHRAE 90.1 - 2007. The approving authority is responsible for compliance of multi - component building systems.

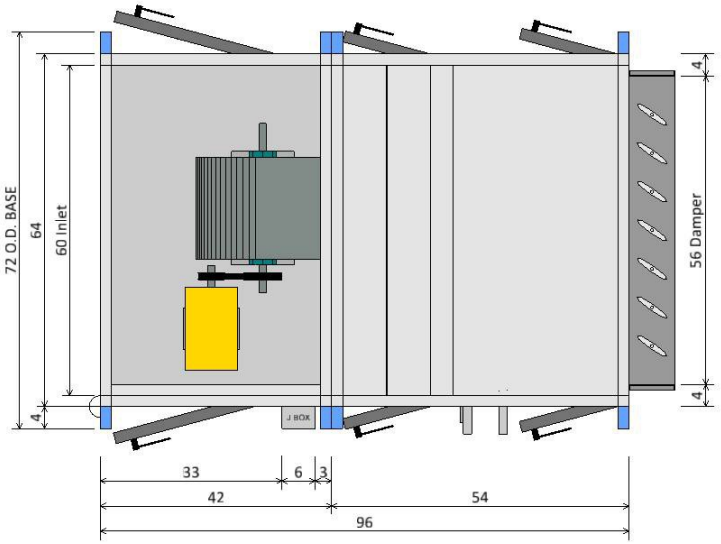

PLAN VIEW

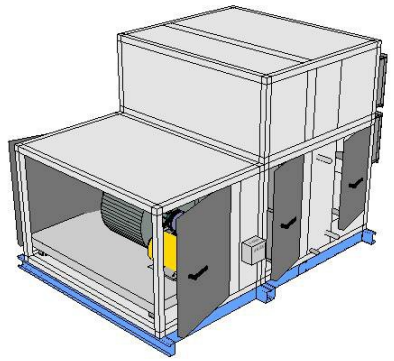

ISOMETRIC VIEW

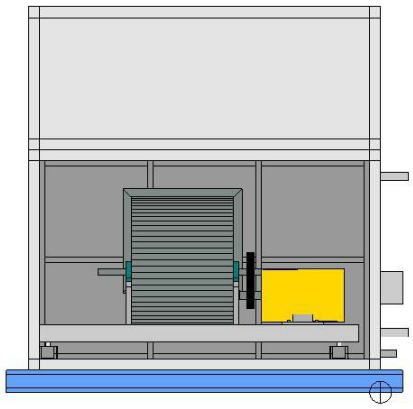

FRONT END VIEW

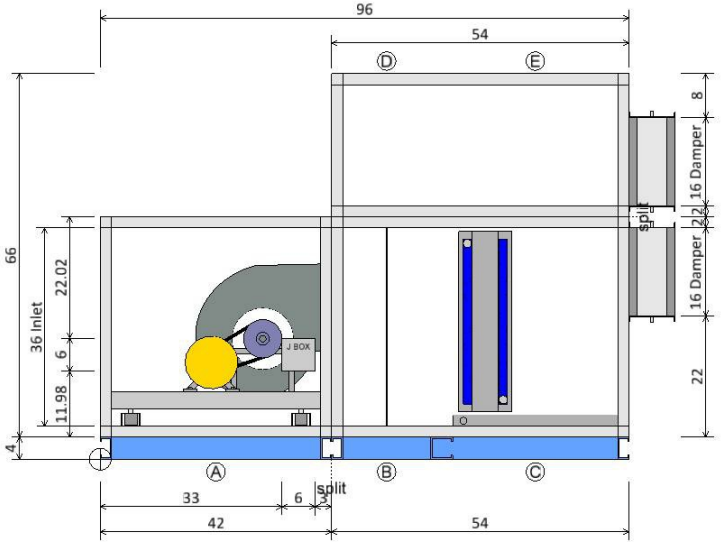

ELEVATION VIEW

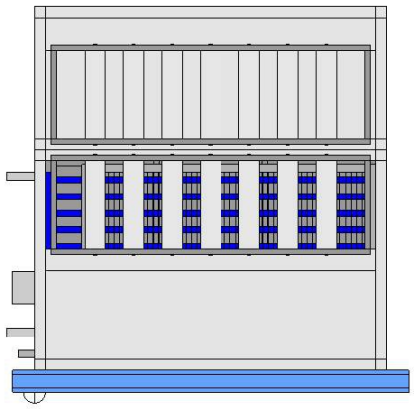

REAR END VIEW

Plan/Elevation	Unit Tag: AHU-1 (Klenk)			Sales Office: HTS Texas		
Product: Vision Air Handler	Project Name: Klein ISD Klenk ES AHU replacements			Sales Engineer:		
Model: CAH011GMAM	Jan. 17, 2026	Ver/Rev:	Sheet: 1 of 1	Scale: NTS	Tolerance: +/-0.25"	Dwg Units: in

DAIKIN
13600 Industrial Park Blvd, Minneapolis, MN 55441
www.DaikinApplied.com Software Version: 13.91

All opening dimensions have a 1" mounting flange along the inner edge. The actual airflow area of the opening is 2" smaller in each dimension.

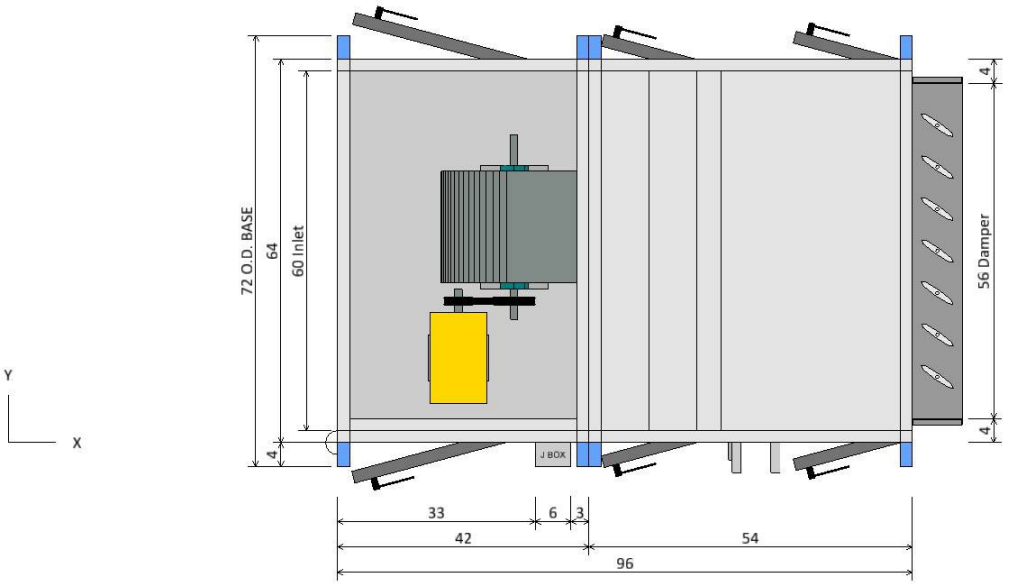

PLAN VIEW

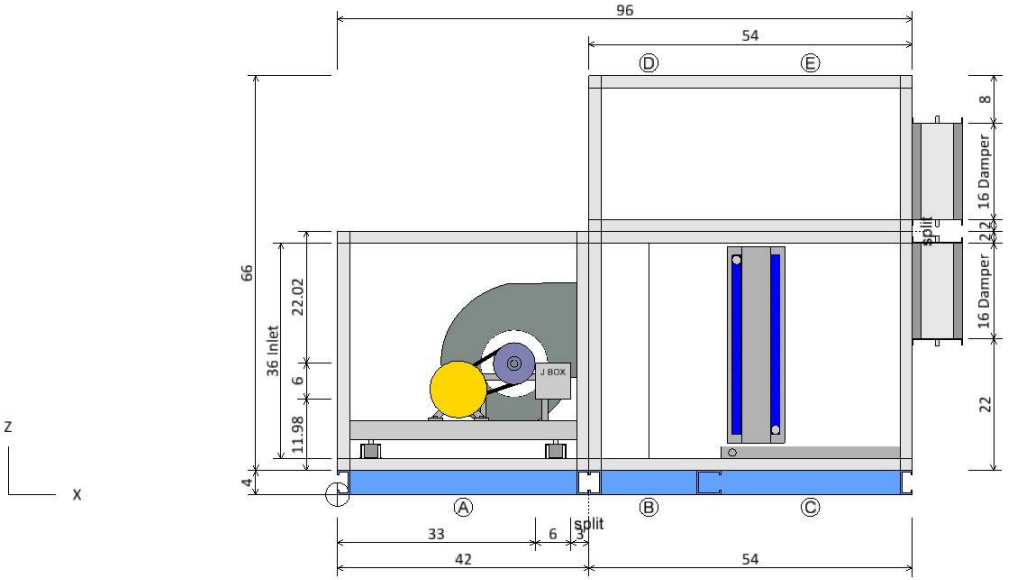

ELEVATION VIEW

Component Key		
Ⓐ	Supply Fan	
	Fan Type:	Centrifugal DWDI
	Fan Size (Class):	15 (2)
	Air Flowrate:	5270.0 cfm
	T.S.P:	2.3 insWg
	Motor Power:	7.5 HP
	Right Door (WxH):	26 ins x 36 ins
	Left Door (WxH):	30 ins x 36 ins
Ⓑ	Diffuser	
	Right Door (WxH):	16 ins x 36 ins
	Left Door (WxH):	16 ins x 36 ins
Ⓒ	Chilled Water coil	
	Coil Model:	5WH1206B
	Total Capacity:	199407.0 Btu/hr
	Right Door (WxH):	18 ins x 30 ins
	Left Door (WxH):	18 ins x 30 ins
Ⓓ	Access Section	
Ⓔ	Hot Water Coil	
	Coil Model:	5WH0001C
	Total Capacity:	0.0 Btu/hr

Plan/Elevation - No Ends	Unit Tag: AHU-1 (Klenk)			Sales Office: HTS Texas		
Product: Vision Air Handler	Project Name: Klein ISD Klenk ES AHU replacements			Sales Engineer:		
Model: CAH011GMAM	Jan. 17, 2026	Ver/Rev:	Sheet: 1 of 1	Scale: NTS	Tolerance: +/-0.25"	Dwg Units: in

DAIKIN
13600 Industrial Park Blvd, Minneapolis, MN 55441
www.DaikinApplied.com Software Version: 13.91

All opening dimensions have a 1" mounting flange along the inner edge. The actual airflow area of the opening is 2" smaller in each dimension.

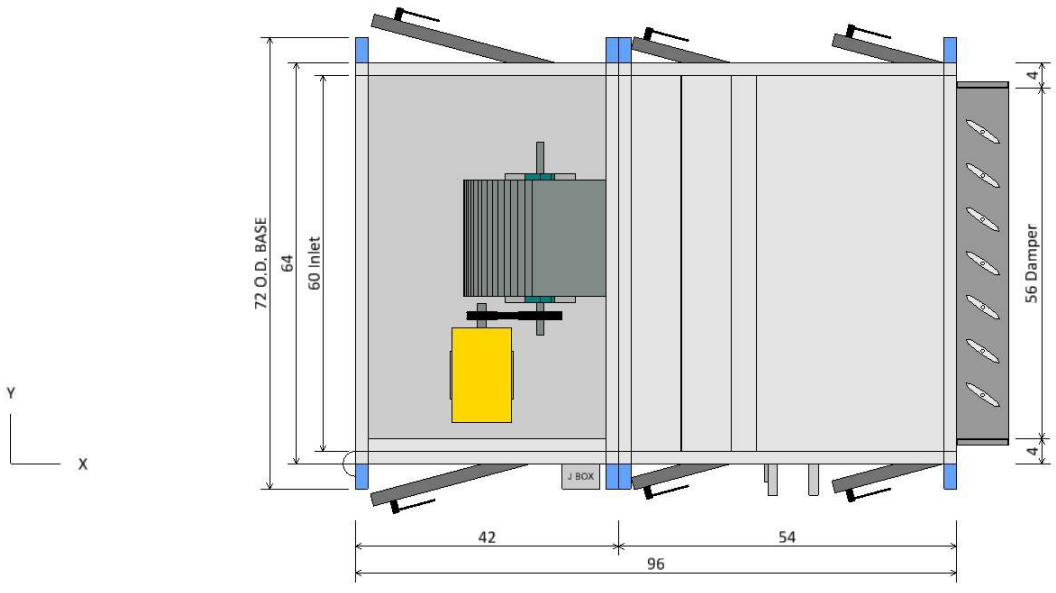

PLAN VIEW

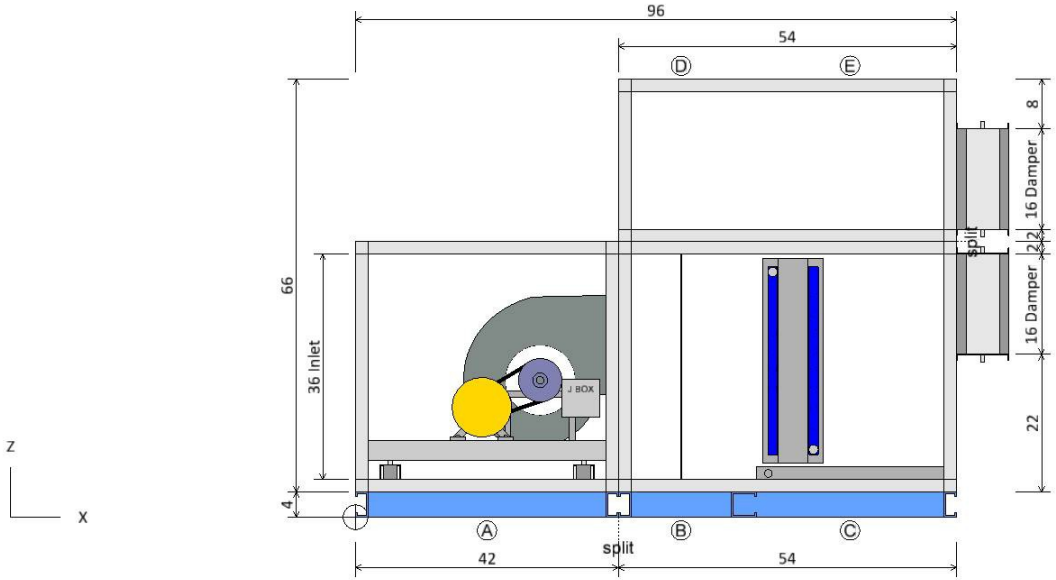

ELEVATION VIEW

Component Key

	Type	X	Y	Z	Wid	Hgt
Ⓐ	Supply Fan Opening	0.00	2.00	6.00	60.00	36.00
Ⓒ	Chilled Water coil MZ cold deck output	104.38	4.00	26.00	56.00	16.00
Ⓔ	Hot Water Coil MZ hot deck output	104.38	4.00	46.00	56.00	16.00

Note: Dimensions are measured from the origin point.
Note: Openings with or without dampers are recessed into the unit by approximately 1.75 in.

Opening/Damper Connections	Unit Tag: AHU-1 (Klenk)			Sales Office: HTS Texas		
Product: Vision Air Handler	Project Name: Klein ISD Klenk ES AHU replacements			Sales Engineer:		
Model: CAH011GMAM	Jan. 17, 2026	Ver/Rev:	Sheet: 1 of 1	Scale: NTS	Tolerance: +/-0.25"	Dwg Units: in

DAIKIN
13600 Industrial Park Blvd, Minneapolis, MN 55441
www.DaikinApplied.com Software Version: 13.91

All opening dimensions have a 1" mounting flange along the inner edge. The actual airflow area of the opening is 2" smaller in each dimension.

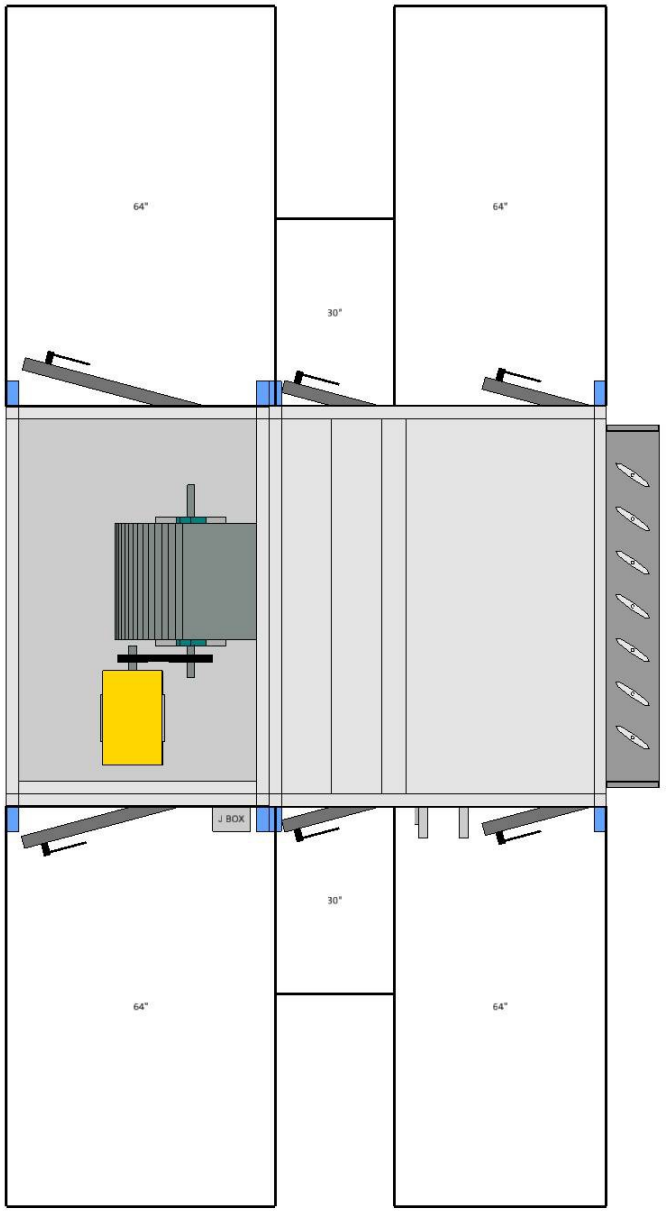

PLAN VIEW

Notes

Check local electrical component service clearance codes for specific distances.

Access is only required on one side of the unit.

Service Clearance View	Unit Tag: AHU-1 (Klenk)			Sales Office: HTS Texas		
Product: Vision Air Handler	Project Name: Klein ISD Klenk ES AHU replacements			Sales Engineer:		
Model: CAH011GMAM	Jan. 17, 2026	Ver/Rev:	Sheet: 1 of 1	Scale: NTS	Tolerance: +/-0.25"	Dwg Units: in

DAIKIN
13600 Industrial Park Blvd, Minneapolis, MN 55441
www.DaikinApplied.com Software Version: 13.91

All opening dimensions have a 1" mounting flange along the inner edge. The actual airflow area of the opening is 2" smaller in each dimension.

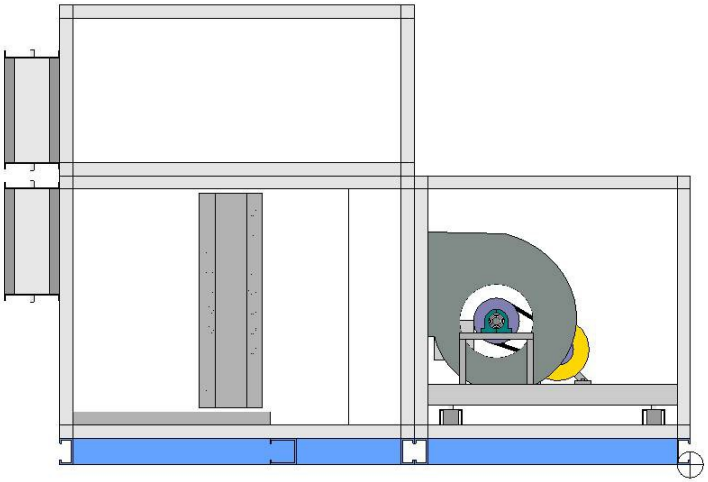

LEFT ELEVATION VIEW

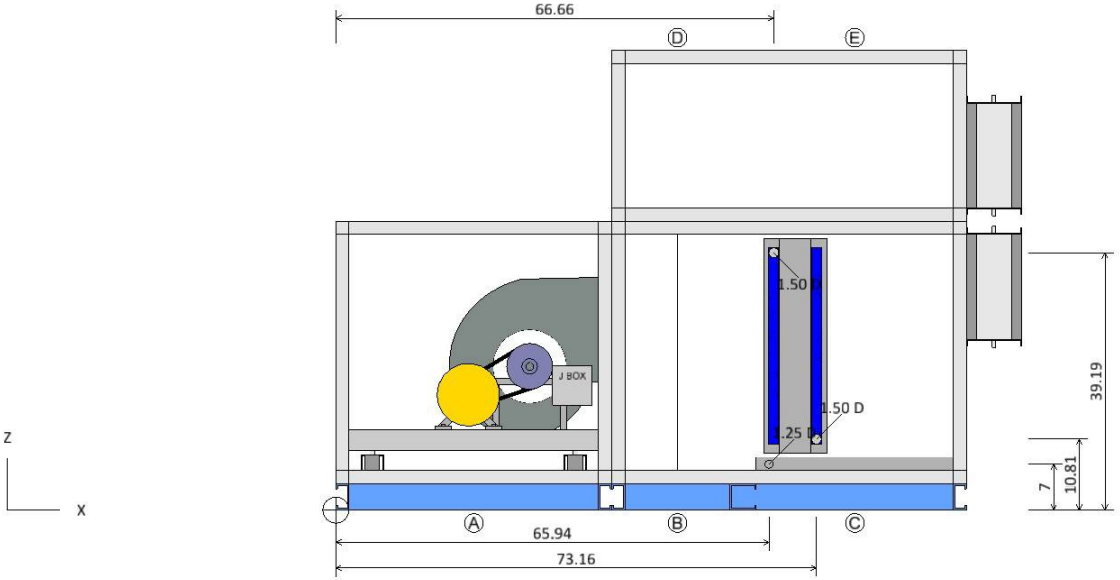

RIGHT ELEVATION VIEW

Coil and Drain Connections

	Type	X	Y	Z	Diam
Ⓒ	Chilled Water coil Condensate drain conn:	65.94	-2.90	7.00	1.25
	Cold water inlet:	73.16	-7.00*	10.81	1.50
	Cold water outlet:	66.66	-7.00*	39.19	1.50

Notes:
Dimensions are measured from the origin point.
* value varies +/- 1 in.

Coil and Drain Connections	Unit Tag: AHU-1 (Klenk)			Sales Office: HTS Texas		
Product: Vision Air Handler	Project Name: Klein ISD Klenk ES AHU replacements			Sales Engineer:		
Model: CAH011GMAM	Jan. 17, 2026	Ver/Rev:	Sheet: 1 of 1	Scale: NTS	Tolerance: +/-0.25"	Dwg Units: in

DAIKIN
13600 Industrial Park Blvd, Minneapolis, MN 55441
www.DaikinApplied.com Software Version: 13.91

All opening dimensions have a 1" mounting flange along the inner edge. The actual airflow area of the opening is 2" smaller in each dimension.

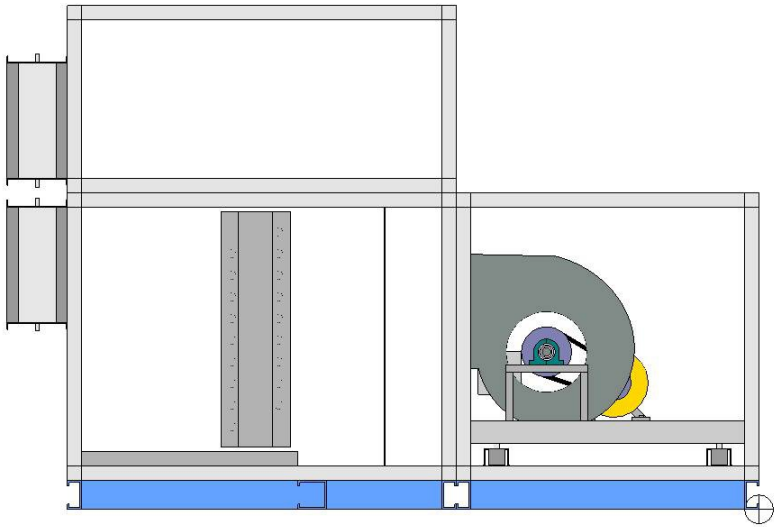

LEFT ELEVATION VIEW

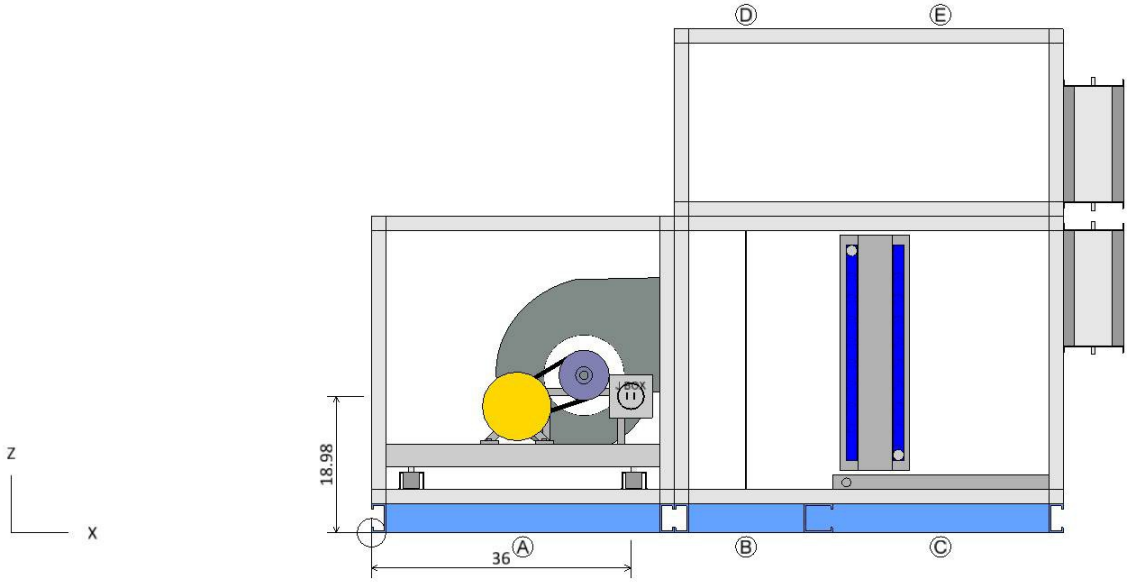

RIGHT ELEVATION VIEW

Component Key

	Type	X	Y	Z	Volts	Phase
Ⓐ	Supply Fan Fan	36.00	0.00	18.98	460	3

Note: Dimensions are measured from the origin point.

Electrical Connections	Unit Tag: AHU-1 (Klenk)			Sales Office: HTS Texas		
Product: Vision Air Handler	Project Name: Klein ISD Klenk ES AHU replacements			Sales Engineer:		
Model: CAH011GMAM	Jan. 17, 2026	Ver/Rev:	Sheet: 1 of 1	Scale: NTS	Tolerance: +/-0.25"	Dwg Units: in

DAIKIN
13600 Industrial Park Blvd, Minneapolis, MN 55441
www.DaikinApplied.com Software Version: 13.91

All opening dimensions have a 1" mounting flange along the inner edge. The actual airflow area of the opening is 2" smaller in each dimension.

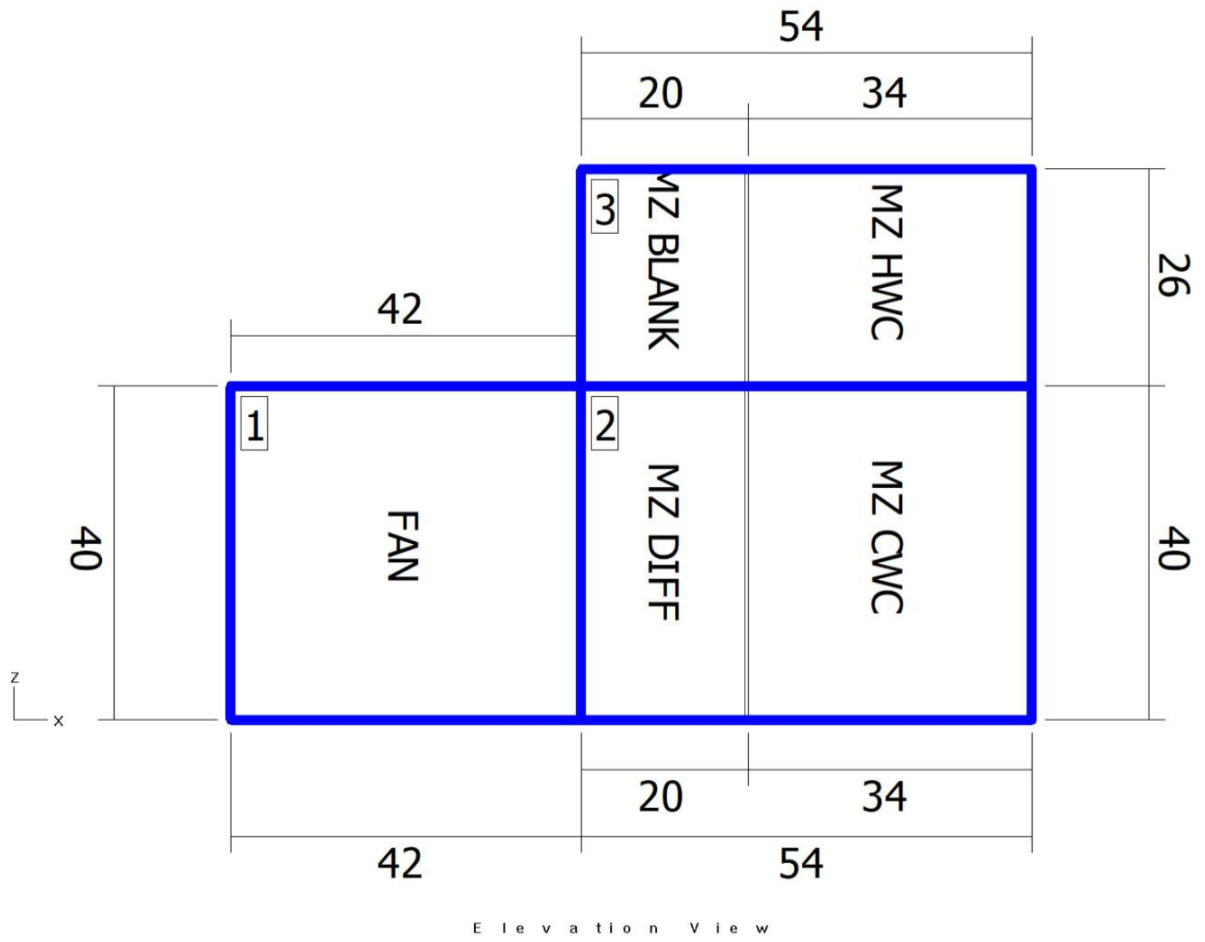

Elevation View

Shipping Sections

Section	Weight (lb)	X	Y	Z
Section 1	883.72	42	64	40
Section 2	937.77	54	64	40
Section 3	426.01	54	64	26
Total Unit	2247.50	96	64	66

Note: Base rails, curb ready base, coil connectors, drain connectors, and control boxes not included in height X, Y, Z dimensions.
Shipping section may be 2" longer in air flow direction due to internal splice joint.
Horizontal multizone section : Add 8.38" to section length if dampers are installed.

Shipping Sections	Unit Tag: AHU-1 (Klenk)			Sales Office: HTS Texas		
Product: Vision Air Handler	Project Name: Klein ISD Klenk ES AHU replacements			Sales Engineer:		
Model: CAH011GMAM	Jan. 17, 2026	Ver/Rev:	Sheet: 1 of 1	Scale: NTS	Tolerance: +/-0.25"	Dwg Units: in

DAIKIN
13600 Industrial Park Blvd, Minneapolis, MN 55441
www.DaikinApplied.com Software Version: 13.91

All opening dimensions have a 1" mounting flange along the inner edge. The actual airflow area of the opening is 2" smaller in each dimension.

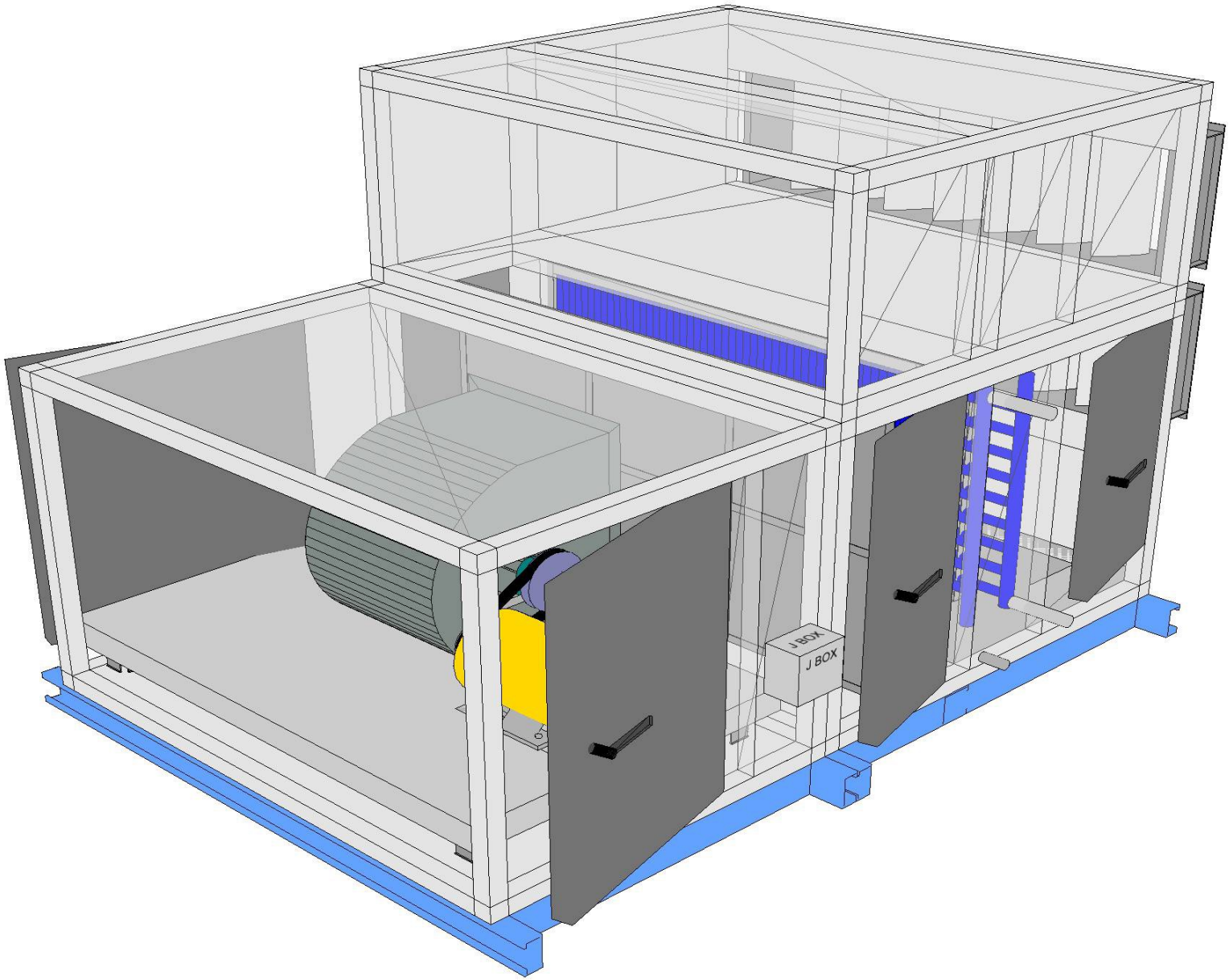

Product Drawing	Unit Tag: AHU-1 (Klenk)			Sales Office: HTS Texas		
Product: Vision Air Handler	Project Name: Klein ISD Klenk ES AHU replacements			Sales Engineer:		
Model: CAH011GMAM	Jan. 17, 2026	Ver/Rev:	Sheet: 1 of 1	Scale: NTS	Tolerance: +/-0.25"	Dwg Units: in

DAIKIN
13600 Industrial Park Blvd, Minneapolis, MN 55441
www.DaikinApplied.com Software Version: 13.91

All opening dimensions have a 1" mounting flange along the inner edge. The actual airflow area of the opening is 2" smaller in each dimension.

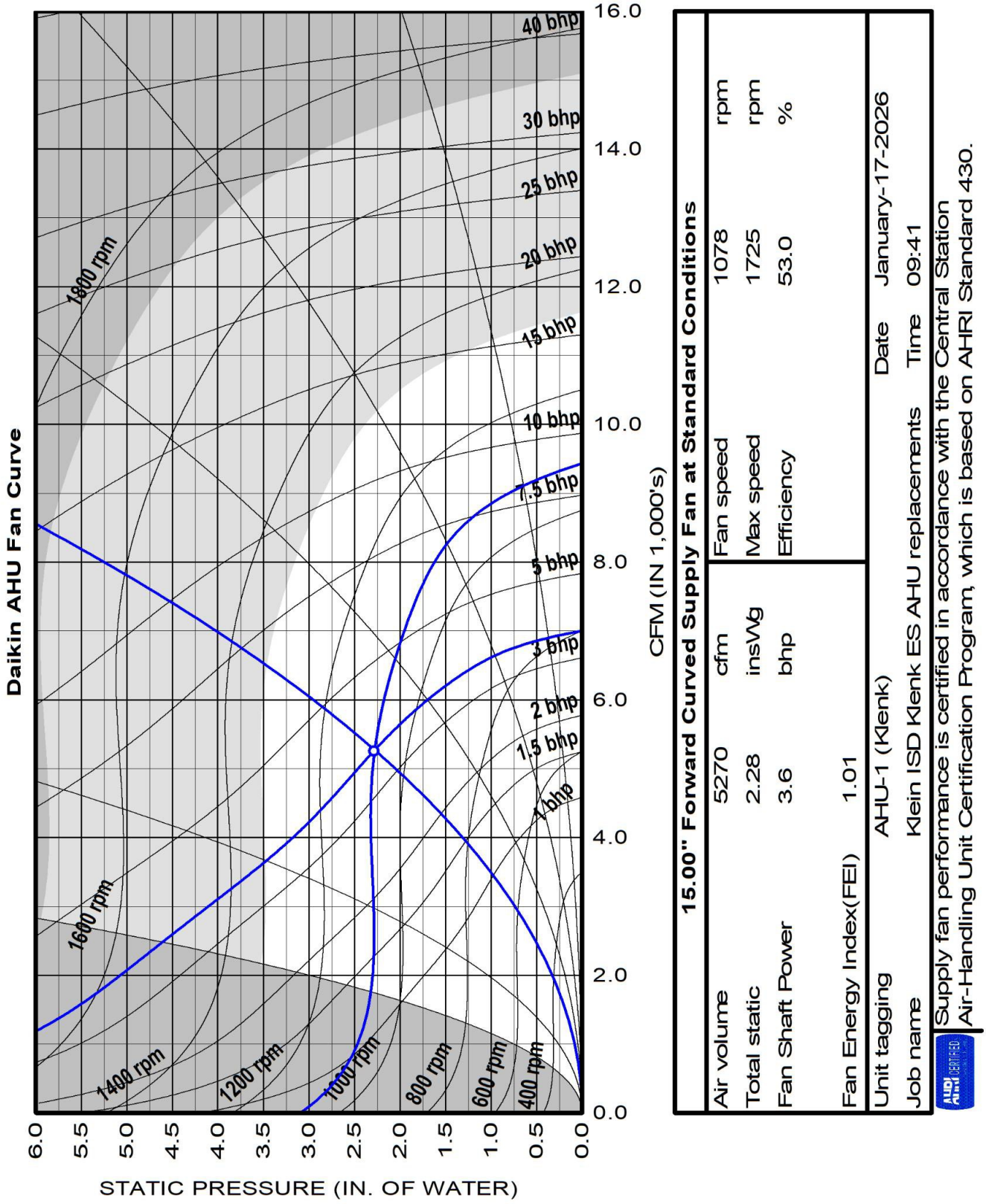
Daikin AHU Fan Curve
STATIC PRESSURE (IN. OF WATER)
CFM (IN 1,000's)
1800 rpm
1600 rpm
1400 rpm
1200 rpm
1000 rpm
800 rpm
600 rpm
400 rpm
40 bhp
30 bhp
25 bhp
20 bhp
15 bhp
10 bhp
7.5 bhp
5 bhp
3 bhp
2 bhp
1.5 bhp
1 bhp
15.00" Forward Curved Supply Fan at Standard Conditions
Air volume 5270 cfm
Total static 2.28 insWg
Fan Shaft Power 3.6 bhp
Fan Energy Index(FEI) 1.01
Fan speed 1078 rpm
Max speed 1725 rpm
Efficiency 53.0 %
Unit tagging AHU-1 (Klenk)
Date January-17-2026
Job name Klein ISD Klenk ES AHU replacements
Time 09:41
Supply fan performance is certified in accordance with the Central Station Air-Handling Unit Certification Program, which is based on AHRI Standard 430.

Job Information	Technical Data Sheet
Job Name	Klein ISD Klenk ES AHU replacements
Date	January 17 2026
Submitted By	Salas O'Brien
Software Version	13.82
Unit Tag	AHU-1 Filter

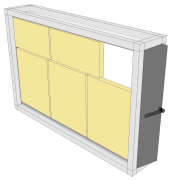

Unit Overview

Model Number	Supply					
	Air Volume cfm	Static Pressure		External Dimensions		
		External inWc	Total inWc	Height in	Width in	Length in
CAC012GVAM	5270	0.95	0.00	42*	64*	12

**Not including base rails, coil connectors, drain connectors and control boxes.*

Unit

Model Number:	CAC012GVAM		
Approval:	ETL Listed / ETL Listed to Canadian Safety Standards (ETL Label / ETLc Label)		
Outer Panel:	18 gauge G90 Galvanized Steel (unpainted)		
Liner:	24 gauge Galvanized Steel (unless noted per section)		
Insulation:	R-13 Injected Foam		
Unit Configuration:	Inline horizontal	**Drive (Handling) Location:**	Right
Base:	None	**Wall Thickness:**	2 in
Altitude:	0 ft	**Parts Warranty:**	Additional One Year, Two Year Total

Panel Filter

Component: 1 | Length: 12 in | Shipping Section: 1

Type	Efficiency	Nominal Face Velocity	Actual Face Velocity	Actual Face Area	Air Volume	Filter Loading
Pre Pleat	MERV 13	376 ft/min	401 ft/min	13.1 ft²	5270 cfm	Side

Air Pressure Drop				Number of Filters	Height	Width	Depth
Clean Air	Mean Air	Dirty Air	User Spec				
0.26 inWc	0.63 inWc	1.00 inWc	N/A	3	24 in	20 in	2 in
				2	12 in	24 in	2 in

Door

Location	Drive Side Door Width	Opp. Drv. Side Door Width	Opening
Both sides	8 in	8 in	Outward

Unit Sound Power (dB)

Type	63 Hz	125 Hz	250 Hz	500 Hz	1000 Hz	2000 Hz	4000 Hz	8000 Hz
Radiated:	64	54	48	41	39	41	46	51
Unit Discharge:	64	54	48	41	39	41	46	51
Unit Return:	64	54	48	41	39	41	46	51

Shipping Section Details

Section	Length in	Weight lb	Corner Weights (lb)				Center of Gravity (in)		
			P1	P2	P3	P4	XX	YY	ZZ
1	12	159	40	40	40	40	6	32	21
Entire Unit	**12**	**159**	**40**	**40**	**40**	**40**	**6**	**32**	**21**

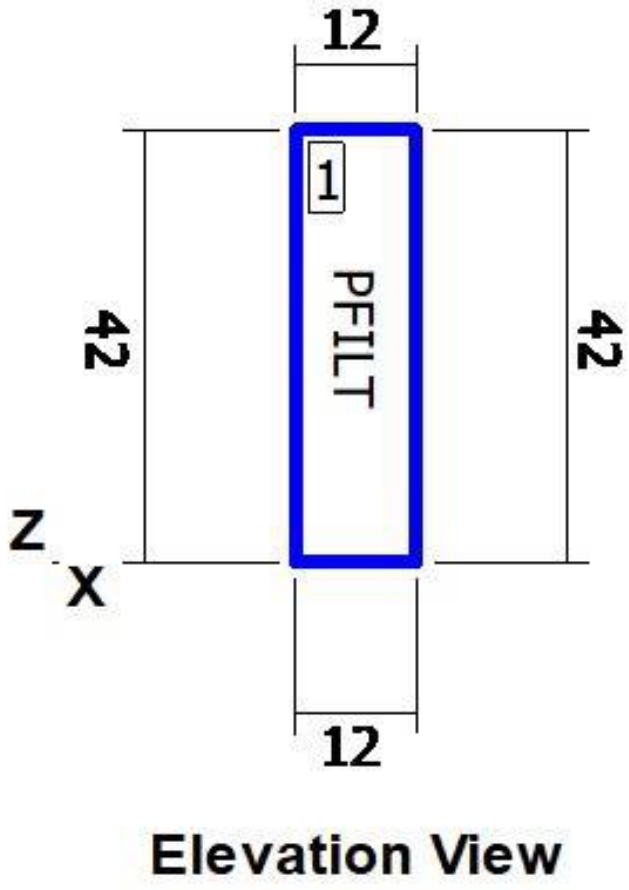

Elevation View

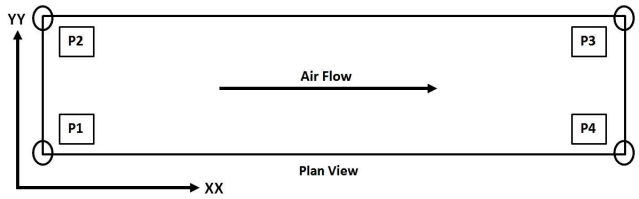

NOTE: Special components aren't included in the corner weights and center of gravity data.

Shipping Protection

None

Supply Static Pressure Drop

Component	Option	Static Pressure Drop
Panel Filter	Panel Filter	0.26 insWg
External Static	External Static	0.95 insWg
Total Supply Fan Static		

AHRI Certification

The air-handler is selected outside of the scope of AHRI Standard 430/431

Notes

Standard

1. As a standalone component, unit meets or exceeds requirements of ASHRAE 90.1 - 2007. The approving authority is responsible for compliance of multi - component building systems.

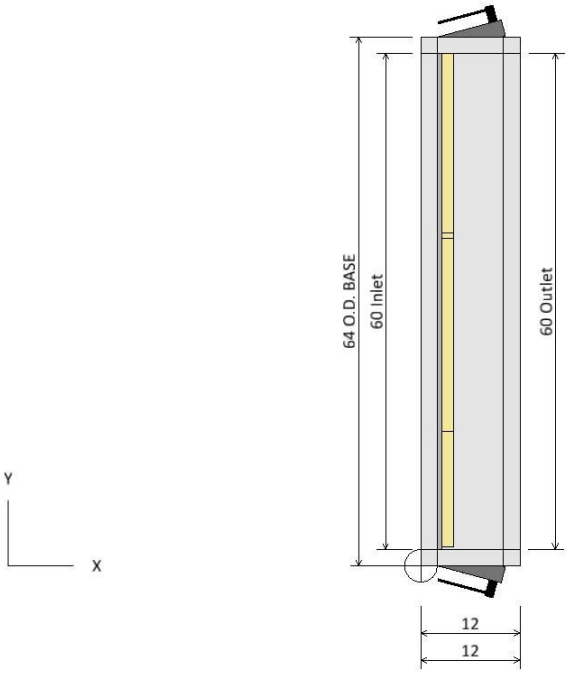

PLAN VIEW

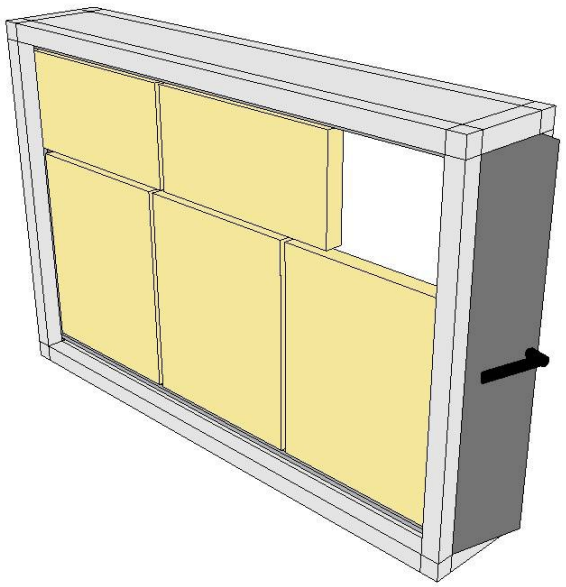

ISOMETRIC VIEW

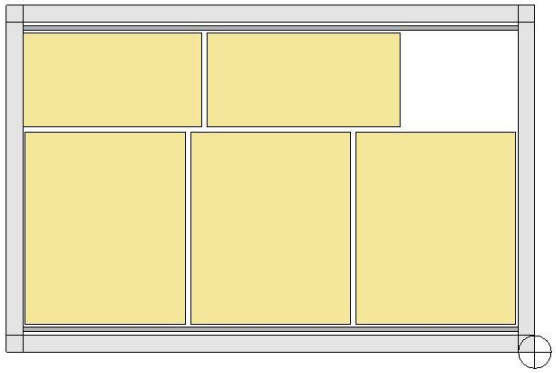

FRONT END VIEW

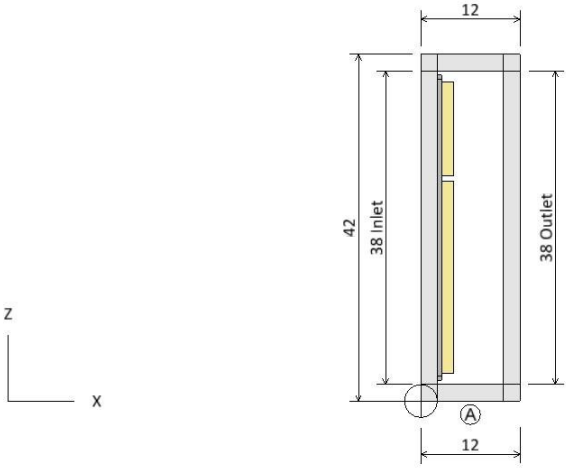

ELEVATION VIEW

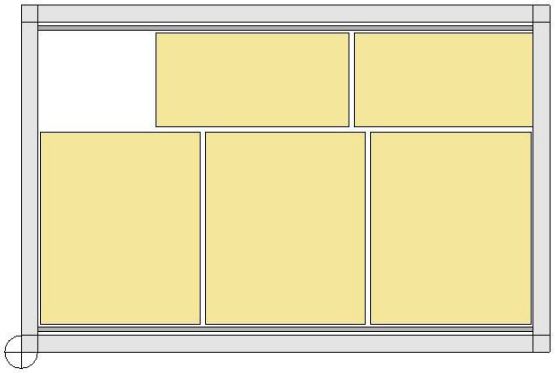

REAR END VIEW

Plan/Elevation	Unit Tag: AHU-1 Filter			Sales Office: HTS Texas		
Product: Vision Air Handler	Project Name: Klein ISD Klenk ES AHU replacements			Sales Engineer:		
Model: CAC012GVAM	Jan. 17, 2026	Ver/Rev:	Sheet: 1 of 1	Scale: NTS	Tolerance: +/-0.25"	Dwg Units: in

DAIKIN
13600 Industrial Park Blvd, Minneapolis, MN 55441
www.DaikinApplied.com Software Version: 13.82

All opening dimensions have a 1" mounting flange along the inner edge. The actual airflow area of the opening is 2" smaller in each dimension.

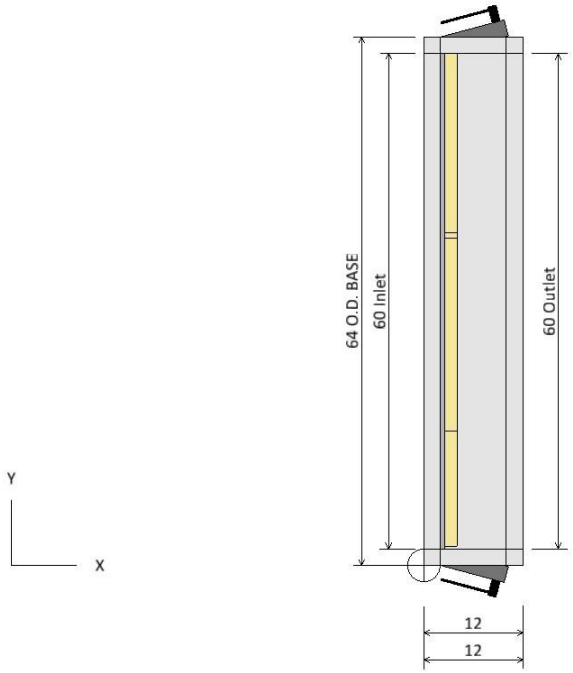

PLAN VIEW

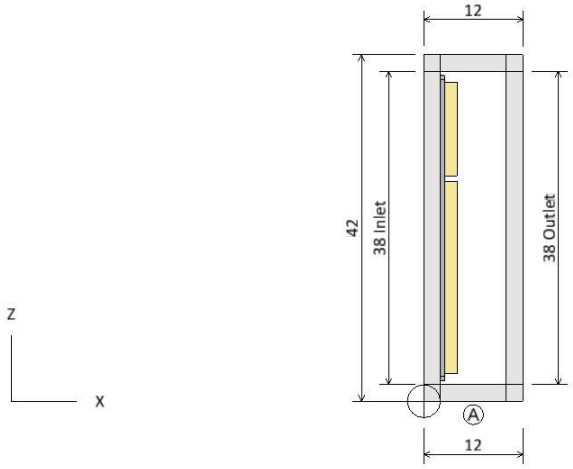

ELEVATION VIEW

Component Key	
Ⓐ	Panel Filter Filter Type: PrePleat (MERV 13) Right Door (WxH): 8 ins x 38 ins Left Door (WxH): 8 ins x 38 ins

Plan/Elevation - No Ends	Unit Tag: AHU-1 Filter			Sales Office: HTS Texas		
Product: Vision Air Handler	Project Name: Klein ISD Klenk ES AHU replacements			Sales Engineer:		
Model: CAC012GVAM	Jan. 17, 2026	Ver/Rev:	Sheet: 1 of 1	Scale: NTS	Tolerance: +/-0.25"	Dwg Units: in

DAIKIN
13600 Industrial Park Blvd, Minneapolis, MN 55441
www.DaikinApplied.com Software Version: 13.82

All opening dimensions have a 1" mounting flange along the inner edge. The actual airflow area of the opening is 2" smaller in each dimension.

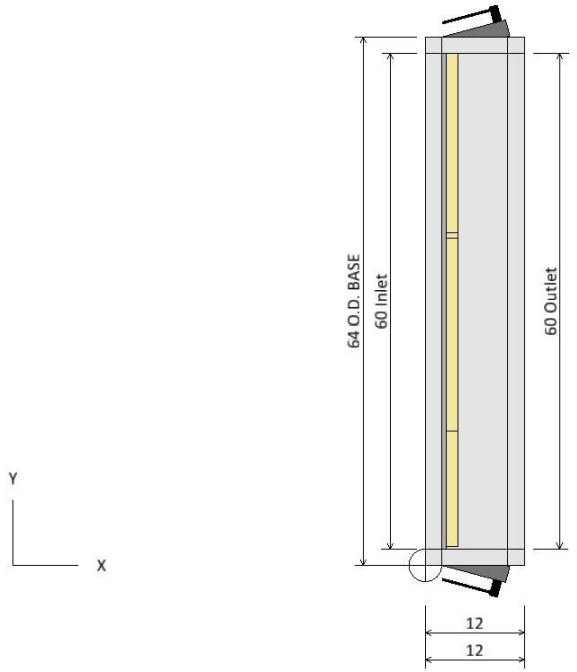

PLAN VIEW

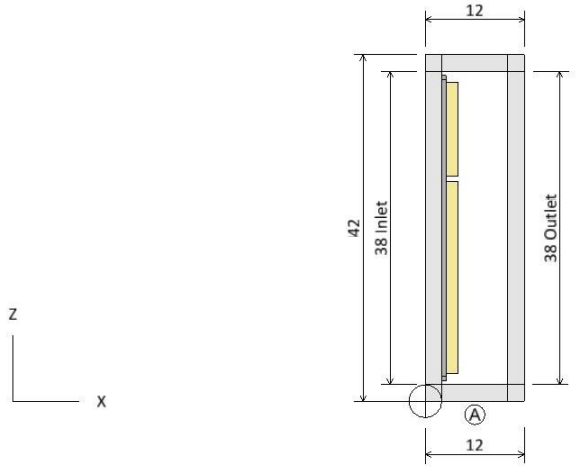

ELEVATION VIEW

Component Key

	Type	X	Y	Z	Wid	Hgt
Ⓐ	Panel Filter Opening	0.00	2.00	2.00	60.00	38.00
	Opening	12.00	2.00	2.00	60.00	38.00

Note: Dimensions are measured from the origin point.
Note: Openings with or without dampers are recessed int the unit by approximately 1.75 in.

Opening/Damper Connections	Unit Tag: AHU-1 Filter			Sales Office: HTS Texas		
Product: Vision Air Handler	Project Name: Klein ISD Klenk ES AHU replacements			Sales Engineer:		
Model: CAC012GVAM	Jan. 17, 2026	Ver/Rev:	Sheet: 1 of 1	Scale: NTS	Tolerance: +/-0.25"	Dwg Units: in

DAIKIN
13600 Industrial Park Blvd, Minneapolis, MN 55441
www.DaikinApplied.com Software Version: 13.82

All opening dimensions have a 1" mounting flange along the inner edge. The actual airflow area of the opening is 2" smaller in each dimension.

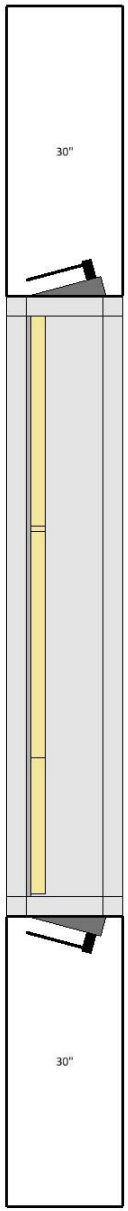

PLAN VIEW

Notes
Check local electrical component service clearance codes for specific distances. Access is only required on one side of the unit.

Service Clearance View	Unit Tag: AHU-1 Filter			Sales Office: HTS Texas		
Product: Vision Air Handler	Project Name: Klein ISD Klenk ES AHU replacements			Sales Engineer:		
Model: CAC012GVAM	Jan. 17, 2026	Ver/Rev:	Sheet: 1 of 1	Scale: NTS	Tolerance: +/-0.25"	Dwg Units: in

DAIKIN
13600 Industrial Park Blvd, Minneapolis, MN 55441
www.DaikinApplied.com Software Version: 13.82

All opening dimensions have a 1" mounting flange along the inner edge. The actual airflow area of the opening is 2" smaller in each dimension.

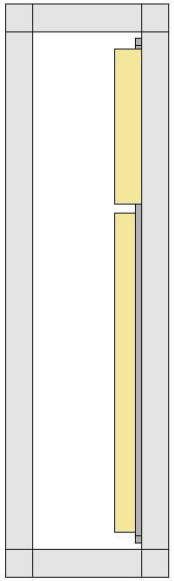

LEFT ELEVATION VIEW

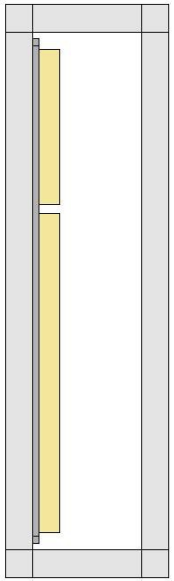

RIGHT ELEVATION VIEW

Coil and Drain Connections

Note: Dimensions are measured from the origin point.

Coil and Drain Connections	Unit Tag: AHU-1 Filter			Sales Office: HTS Texas		
Product: Vision Air Handler	Project Name: Klein ISD Klenk ES AHU replacements			Sales Engineer:		
Model: CAC012GVAM	Jan. 17, 2026	Ver/Rev:	Sheet: 1 of 1	Scale: NTS	Tolerance: +/-0.25"	Dwg Units: in

DAIKIN
13600 Industrial Park Blvd, Minneapolis, MN 55441
www.DaikinApplied.com Software Version: 13.82

All opening dimensions have a 1" mounting flange along the inner edge. The actual airflow area of the opening is 2" smaller in each dimension.

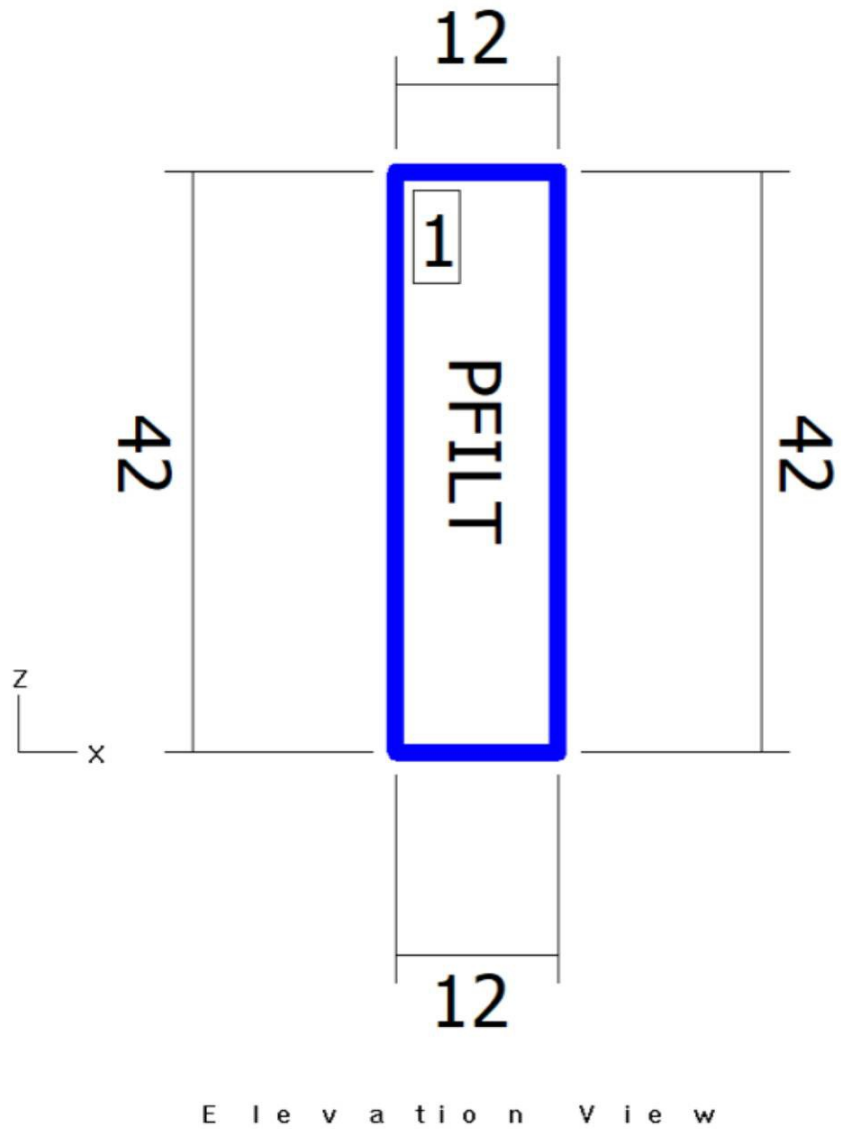

Elevation View

Shipping Sections

Section	Weight (lb)	X	Y	Z
Section 1	158.96	12	64	42
Total Unit	158.96	12	64	42

Note: Base rails, curb ready base, coil connectors, drain connectors, and control boxes not included in height X, Y, Z dimensions.
Shipping section may be 2" longer in air flow direction due to internal splice joint.

Shipping Sections	Unit Tag: AHU-1 Filter			Sales Office: HTS Texas		
Product: Vision Air Handler	Project Name: Klein ISD Klenk ES AHU replacements			Sales Engineer:		
Model: CAC012GVAM	Jan. 17, 2026	Ver/Rev:	Sheet: 1 of 1	Scale: NTS	Tolerance: +/-0.25"	Dwg Units: in

DAIKIN
13600 Industrial Park Blvd, Minneapolis, MN 55441
www.DaikinApplied.com Software Version: 13.82

All opening dimensions have a 1" mounting flange along the inner edge. The actual airflow area of the opening is 2" smaller in each dimension.

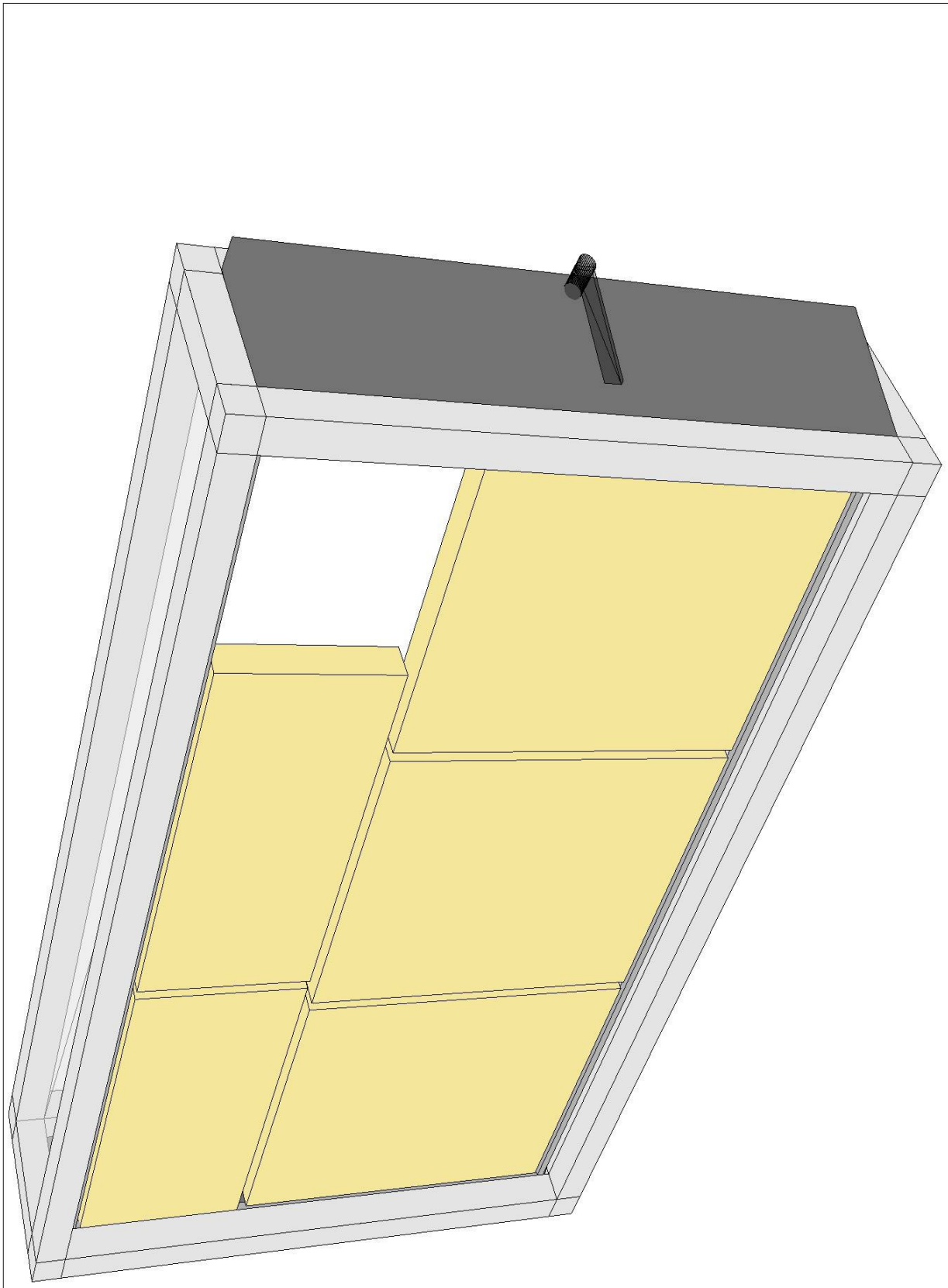

Product Drawing	Unit Tag: AHU-1 Filter	Sales Office: HTS Texas
Product: Vision Air Handler	Project Name: Klein ISD Klenk ES AHU replacement	Sales Engineer:
Model: CAC012GVAM	Jan. 17, 2026 | Ver/Rev: | Sheet: 1 of 1 | Scale: NTS | Tolerance: +/-0.25" | Dwg Units: in	

DAIKIN
13600 Industrial Park Blvd, Minneapolis, MN 55441
www.DaikinApplied.com Software Version: 13.82

All opening dimensions have a 1" mounting flange along the inner edge. The actual airflow area of the opening is 2" smaller in each dimension.

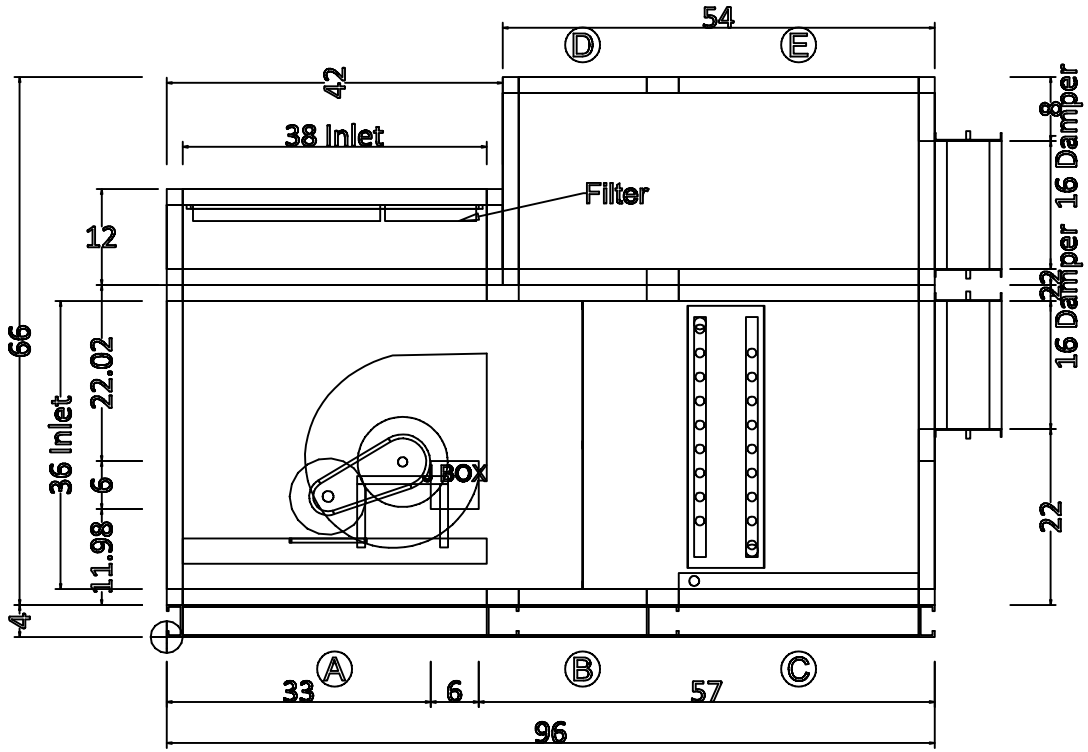

ELEVATION VIEW

Plan/Elevation - No Ends	Unit Tag: AHU-1 (Klenk) Top Filter			Sales Office: HTS Texas			DAIKIN
Product: Vision Air Handler	Project Name: Klein ISD Klenk ES AHU replacements			Sales Engineer:			13600 Industrial Park Blvd, Minneapolis, MN 55441
Model: CAH011GMAM	Dec. 3, 2025	Ver/Rev:	Sheet: 1 of 1	Scale: NTS	Tolerance: +/-0.25"	Dwg Units: in	www.DaikinApplied.com Software Version: 13.82

All opening dimensions have a 1" mounting flange along the inner edge. The actual airflow area of the opening is 2" smaller in each dimension.

Job Information	Technical Data Sheet
Job Name	Klein ISD Klenk ES AHU replacements
Date	January 17 2026
Submitted By	Salas O'Brien
Software Version	13.82
Unit Tag	AHU-2 (Klenk) Final

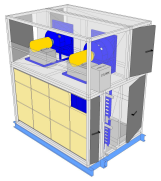

Unit Overview

Model Number	Supply					
	Air Volume cfm	Static Pressure		External Dimensions		
		External inWc	Total inWc	Height in	Width in	Length in
CAH030GDGM	12245	0.75	2.27	60*	96*	70**

**Not including base rails, coil connectors, drain connectors and control boxes.*

***Total lower deck length.*

Unit

Model Number:	CAH030GDGM		
Approval:	ETL Listed / ETL Listed to Canadian Safety Standards (ETL Label / ETLc Label)		
Outer Panel:	18 gauge G90 Galvanized Steel (unpainted)		
Liner:	24 gauge Galvanized Steel (unless noted per section)		
Insulation:	R-13 Injected Foam		
Unit Configuration:	Stacked / vertical	**Drive (Handling) Location:**	Right
Base:	6" formed channel	**Wall Thickness:**	2 in
Altitude:	0 ft	**Parts Warranty:**	Additional One Year, Two Year Total

Panel Filter

Component: 1 | Length: 16 in | Shipping Section: 1

Type	Efficiency	Nominal Face Velocity	Actual Face Velocity	Actual Face Area	Air Volume	Filter Loading
Pre Pleat	MERV 13	388 ft/min	413 ft/min	29.6 ft²	12245 cfm	Side

Air Pressure Drop				Number of Filters	Height	Width	Depth
Clean Air	Mean Air	Dirty Air	User Spec				
0.27 inWc	**0.63** inWc	1.00 inWc	N/A	6	20 in	24 in	2 in
				2	20 in	20 in	2 in
				3	12 in	24 in	2 in

Door

Location	Drive Side Door Width	Opp. Drv. Side Door Width	Opening
Both sides	8 in	8 in	Outward

Special Options

Sound Baffle

(As casing details)

Special Text

Extra filters 1 set(s)

Chilled Water Coil

Component: 2 | Length: 54 in | Shipping Section: 2

Coil Model	Total Capacity	Sensible Capacity	Number of Coils	Number of Rows	Fins per Inch	Tube Diameter	Tube Spacing (Face x Row)
5WL0806B	463527 Btu/hr	332157 Btu/hr	2	6	8	0.625 in	1.50 in x 1.299 in

Coil Operating Weight	Coil Dry Weight
684 lb	497 lb

Air Volume	Air Temperature				Coil Air Pressure Drop	Finned Height	Finned Length	Face Area	Face Velocity
	Entering		Leaving						
	Dry Bulb	Wet Bulb	Dry Bulb	Wet Bulb					
12245 cfm	79.4 °F	66.1 °F	54.6 °F	53.6 °F	0.53 inWc	24 in	83 in	27.67 ft²	443 ft/min

Water

Entering	Leaving	Flow Rate	Pressure Drop	Velocity	Fluid Volume	Fluid Weight
45.0 °F	54.2 °F	100.70 gpm	14.10 ftHd	4.50 ft/s	22.0 gal	187.00 lb

Connection [Data Per Coil]				Min. Fin Surface Temp.	Min. Tube Wall Surface Temp.	Fouling Factor
Type	Size	Location	Material			
Threaded	2.00 in	Drive side	Carbon steel	45.0 °F	45.0 °F	0.000

Material				Drain Pan	Drain Side
Fin	Tube	Header	Case		
Aluminum .0075 in	Copper .020 in	Copper	Stainless steel	Stainless steel	Drive side

AHRI 410 Certification

Certified in accordance with the AHRI Forced-Circulation Air-Cooling and Air-Heating Coils Certification Program which is based on AHRI Standard 410 within the Range of Standard Rating Conditions listed in Table 1 of the Standard. Certified units may be found in the AHRI Directory at www.ahridirectory.org

Door

Location	Drive Side Door Width	Opp. Drv. Side Door Width	Opening
Both sides	30 in	30 in	Outward

Access Section

Component: 3 | Length: 26 in | Shipping Section: 3

Air Pressure Drop
0.00 inWc

Door

Location	Drive Side Door Width	Opp. Drv. Side Door Width	Opening
Both sides	22 in	22 in	Outward

Supply Fan

Component: 4 | Length: 44 in | Shipping Section: 4

Fan Performance

Air Volume*	Static Pressure			Fan Energy Index(FEI)	Total Input Power	Fan Shaft Power*	Fan Wheel Speed		Redundancy(N-1)	Fan Circuit	
	External	Total	Cabinet				Operating	Maximum		MOP	MCA
6123 cfm	0.75 inWc	2.27 inWc	0.36 inWc	1.39	5.7 kW	3.46 BHP	1764 rpm	2674 rpm	90.8 %	40.0 A	28.6 A

Fan Data

Fan Type	Blade Type / Class	Nominal Fan Size	Quantity of Fans	Wheel Diameter	Material Type	Number of Blades	Discharge	Motor Location
Centrifugal - Plenum	Airfoil / 2	DDPL20	2	20.00 in	Aluminum	9	End, single opening	Behind Fan

Motor Data

Power*	Electrical Supply	Speed	Efficiency	Enclosure	Frame Size	Supplier	Number of Poles	Lock Rotor Current*	Full Load Current*
10.0 HP	460/60/3 V/Hz/Phase	1750 rpm	Premium	TEFC	215 T frame	Generic	4	106.62 A	12.70 A

Fan Options

Shaft Grounding Kit:	Provided	**Isolator Type:**	Spring

VFD/Starter/Disconnect Data

Selection Type:	Grouped MMP J-Box	**Vendor:**	Factory Standard
Voltage:	460 V	**Height x Width x Depth:**	15.75 in x 11.81 in x 7.90 in
Mounting:	Door Side	**Enclosure:**	NEMA 1

Door

Location	Width	Opening
Non-drive side	30 in	Outward

Notes

** after a unit label denotes the data per fan.*

Unit Sound Power (dB)

Type	63 Hz	125 Hz	250 Hz	500 Hz	1000 Hz	2000 Hz	4000 Hz	8000 Hz
Radiated:	72	74	74	65	60	54	46	51
Unit Discharge:	82	74	87	81	82	82	80	70
Unit Return:	78	81	88	82	75	73	66	56

Shipping Section Details

Section	Length in	Weight lb	Corner Weights (lb)				Center of Gravity (in)		
			P1	P2	P3	P4	XX	YY	ZZ
1	16	421	96	96	114	114	9	48	28
2	54	1813	560	539	347	368	21	47	29
3	26	327	93	93	71	71	11	48	24
4	44	1385	365	394	327	299	20	50	19
Entire Unit	**70** *Lower level only*	**3946**	**n/a**	**n/a**	**n/a**	**n/a**	**n/a**	**n/a**	**n/a**

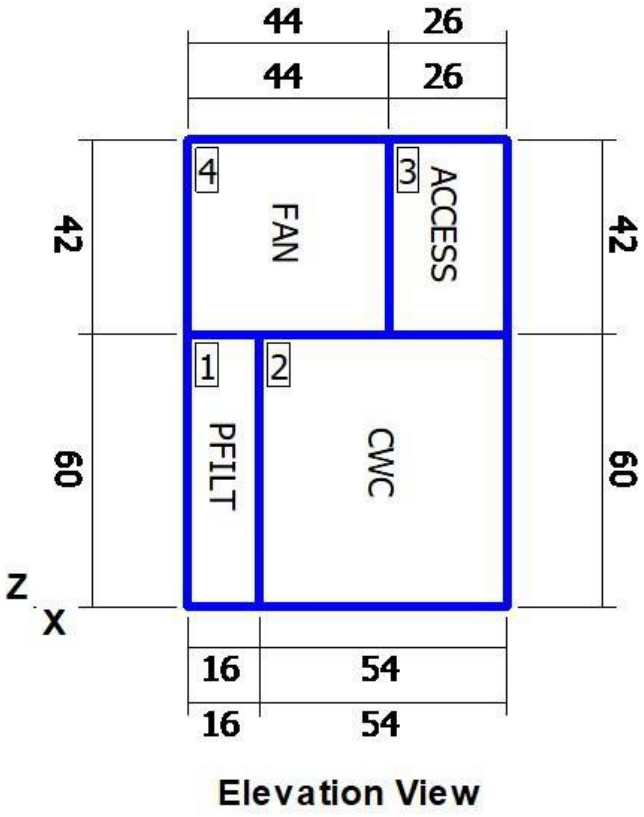

Elevation View

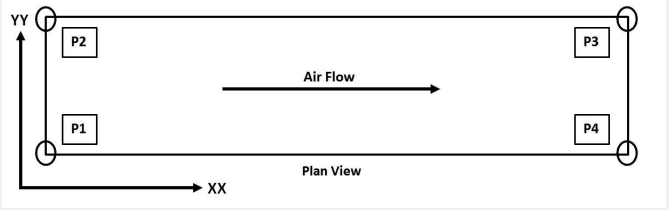

NOTE: Special components aren't included in the corner weights and center of gravity data.

NOTE: Shipping weights listed do not include weight of water (listed in coil section(s) above.

Shipping Protection	None

Supply Static Pressure Drop

Component	Option	Static Pressure Drop
Panel Filter	Panel Filter	0.63 insWg
Chilled Water coil	Chilled Water coil	0.53 insWg
Access Section	Access Section	
Supply Fan	Cabinet	0.36 insWg
External Static	External Static	0.75 insWg
Total Supply Fan Static		2.27 insWg

Minimum Recommended Drain Pan Trap Dimensions

Shipping Section	Component	H
2	Chilled Water coil	2.82

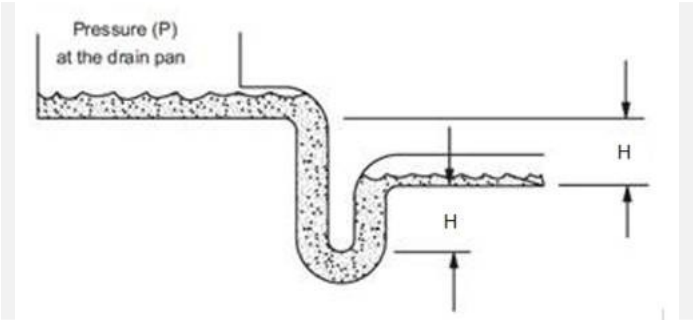

Dimensions provided as a courtesy and are recommended minimums only. Daikin is not responsible for supplying or designing drain pan traps and is not responsible for any damage caused by incorrect trap heights. The dimensions listed above should be reviewed and approved by a licensed plumbing professional.

AHRI Certification

Certified by the AHRI Central Station Air-Handling Unit (AHU) Certification Program, which is based on AHRI Standard 430/431. AHRI certified units are subject to rigorous and continuous testing, have performance ratings independently measured and are third-party verified. Certified units may be found in the AHRI Directory at www.ahridirectory.org.

Notes

Standard
1. As a standalone component, unit meets or exceeds requirements of ASHRAE 90.1 - 2007. The approving authority is responsible for compliance of multi - component building systems.

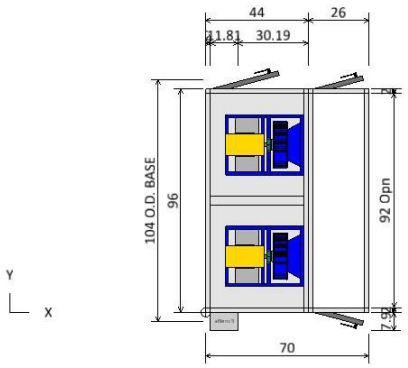

TOP DECK PLAN VIEW

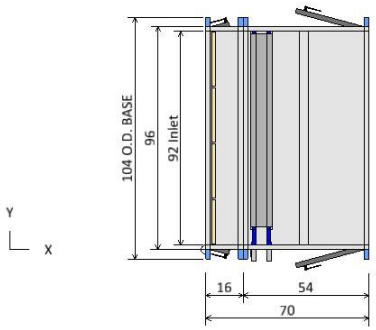

BOTTOM DECK PLAN VIEW

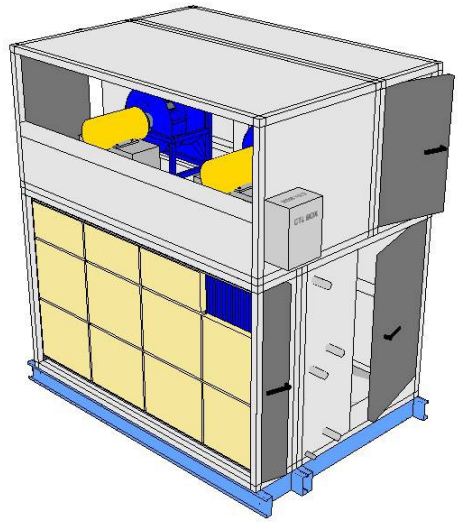

ISOMETRIC VIEW

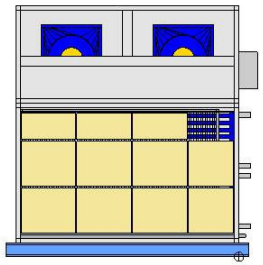

FRONT END VIEW

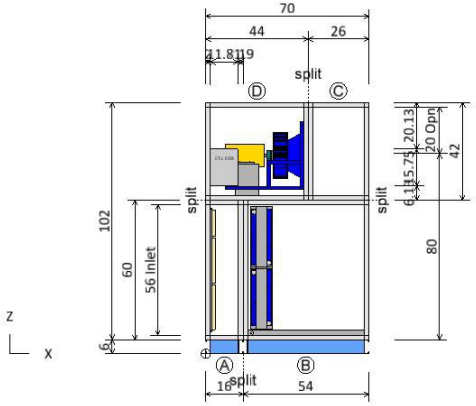

ELEVATION VIEW

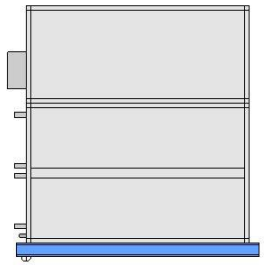

REAR END VIEW

Product Drawing	Unit Tag: AHU-2 (Klenk) Final			Sales Office: HTS Texas		
Product: Vision Air Handler	Project Name: Klein ISD Klenk ES AHU replacements			Sales Engineer:		
Model: CAH030GDGM	Jan. 17, 2026	Ver/Rev:	Sheet: 1 of 1	Scale: NTS	Tolerance: +/-0.25"	Dwg Units: in

DAIKIN
13600 Industrial Park Blvd, Minneapolis, MN 55441
www.DaikinApplied.com Software Version: 13.91

All opening dimensions have a 1" mounting flange along the inner edge. The actual airflow area of the opening is 2" smaller in each dimension.

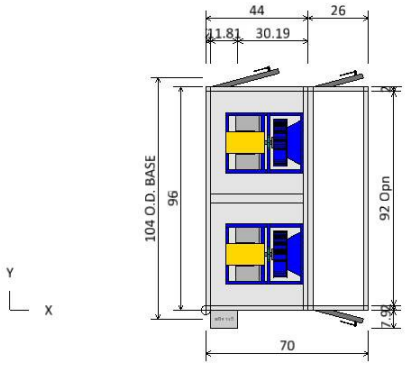

TOP DECK PLAN VIEW

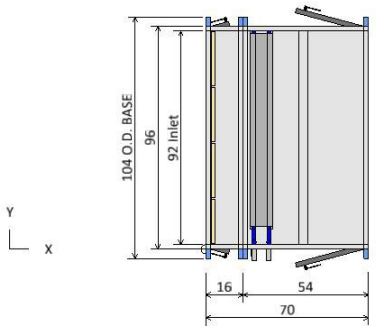

BOTTOM DECK PLAN VIEW

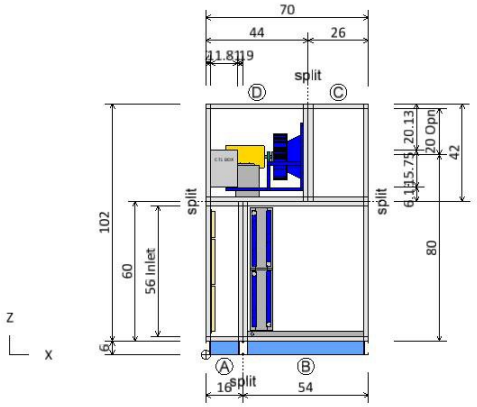

ELEVATION VIEW

Component Key		
Ⓐ	Panel Filter	
	Filter Type:	PrePleat (MERV 13)
	Right Door (WxH):	8 ins x 56 ins
	Left Door (WxH):	8 ins x 56 ins
Ⓑ	Chilled Water coil	
	Coil Model:	5WL0806B
	Total Capacity:	463527.0 Btu/hr
	Right Door (WxH):	30 ins x 50 ins
	Left Door (WxH):	30 ins x 50 ins
Ⓒ	Access Section	
	Right Door (WxH):	22 ins x 38 ins
	Left Door (WxH):	22 ins x 38 ins
Ⓓ	Supply Fan	
	Fan Type:	Centrifugal - Plenum
	Fan Size (Class):	20 (2)
	Air Flowrate:	6122.5 cfm
	T.S.P:	2.3 insWg
	Motor Power:	10.0 HP
	Left Door (WxH):	30 ins x 38 ins

Product Drawing	Unit Tag: AHU-2 (Klenk) Final			Sales Office: HTS Texas		
Product: Vision Air Handler	Project Name: Klein ISD Klenk ES AHU replacements			Sales Engineer:		
Model: CAH030GDGM	Jan. 17, 2026	Ver/Rev:	Sheet: 1 of 1	Scale: NTS	Tolerance: +/-0.25"	Dwg Units: in

DAIKIN
13600 Industrial Park Blvd, Minneapolis, MN 55441
www.DaikinApplied.com Software Version: 13.91

All opening dimensions have a 1" mounting flange along the inner edge. The actual airflow area of the opening is 2" smaller in each dimension.

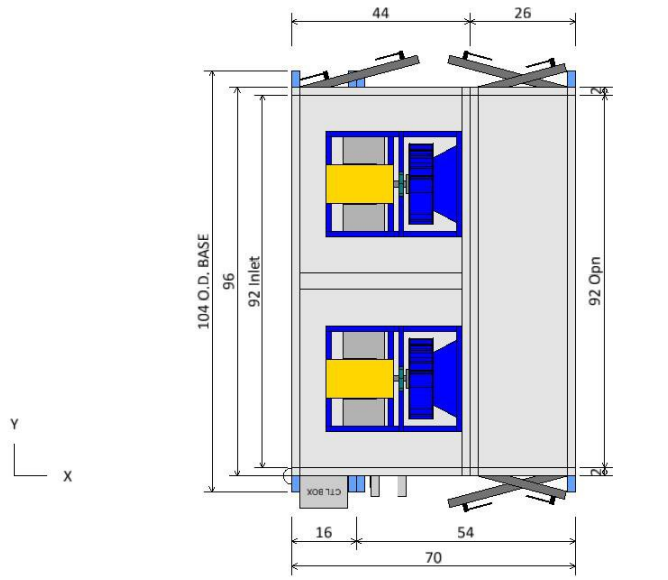

PLAN VIEW

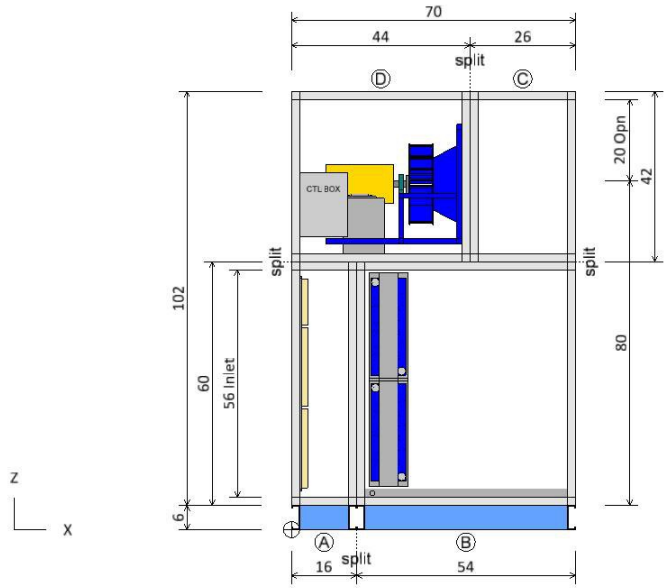

ELEVATION VIEW

Component Key

	Type	X	Y	Z	Wid	Hgt
Ⓐ	Panel Filter Opening	0.00	2.00	8.00	92.00	56.00
Ⓓ	Supply Fan Fan Discharge	0.00	2.00	86.00	92.00	20.00

Note: Dimensions are measured from the origin point.
Note: Openings with or without dampers are recessed into the unit by approximately 1.75 in.

Opening/Damper Connections	Unit Tag: AHU-2 (Klenk) Final			Sales Office: HTS Texas		
Product: Vision Air Handler	Project Name: Klein ISD Klenk ES AHU replacements			Sales Engineer:		
Model: CAH030GDGM	Jan. 17, 2026	Ver/Rev:	Sheet: 1 of 1	Scale: NTS	Tolerance: +/-0.25"	Dwg Units: in

DAIKIN
13600 Industrial Park Blvd, Minneapolis, MN 55441
www.DaikinApplied.com Software Version: 13.91

All opening dimensions have a 1" mounting flange along the inner edge. The actual airflow area of the opening is 2" smaller in each dimension.

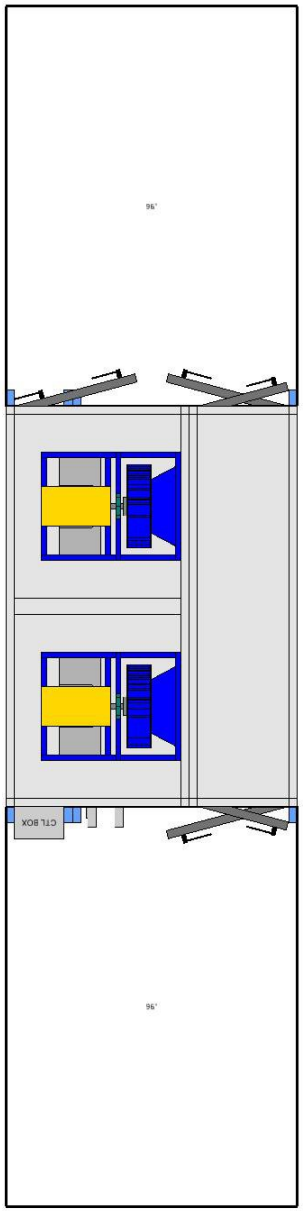

PLAN VIEW

Notes
Check local electrical component service clearance codes for specific distances. Access is only required on one side of the unit.

Service Clearance View	Unit Tag: AHU-2 (Klenk) Final			Sales Office: HTS Texas			DAIKIN
Product: Vision Air Handler	Project Name: Klein ISD Klenk ES AHU replacements			Sales Engineer:			13600 Industrial Park Blvd, Minneapolis, MN 55441
Model: CAH030GDGM	Jan. 17, 2026	Ver/Rev:	Sheet: 1 of 1	Scale: NTS	Tolerance: +/-0.25"	Dwg Units: in	www.DaikinApplied.com Software Version: 13.91

All opening dimensions have a 1" mounting flange along the inner edge. The actual airflow area of the opening is 2" smaller in each dimension.

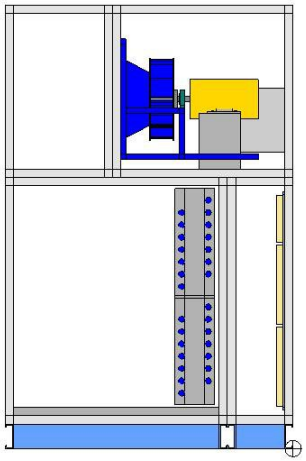

LEFT ELEVATION VIEW

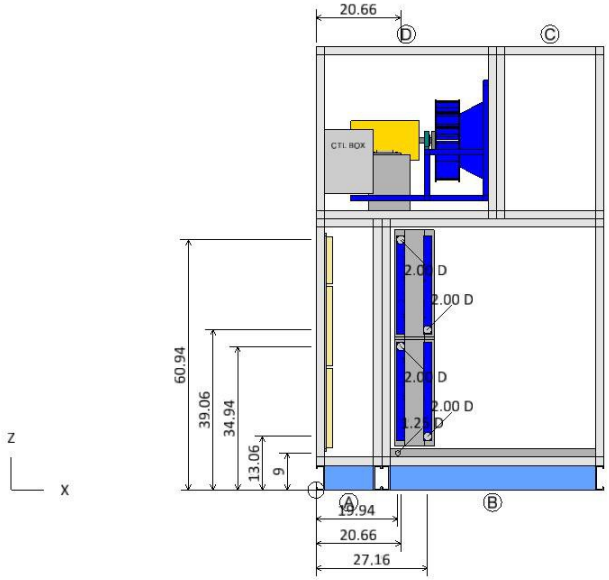

RIGHT ELEVATION VIEW

Coil and Drain Connections

	Type	X	Y	Z	Diam
	Chilled Water coil				
	Condensate drain conn:	19.94	-2.90	9.00	1.25
Ⓑ	Cold water inlet:	27.16	-7.00*	13.06	2.00
	Cold water outlet:	20.66	-7.00*	34.94	2.00
	Cold water inlet:	27.16	-7.00*	39.06	2.00
	Cold water outlet:	20.66	-7.00*	60.94	2.00

Notes:
Dimensions are measured from the origin point.
* value varies +/- 1 in.

Coil and Drain Connections	Unit Tag: AHU-2 (Klenk) Final			Sales Office: HTS Texas		
Product: Vision Air Handler	Project Name: Klein ISD Klenk ES AHU replacements			Sales Engineer:		
Model: CAH030GDGM	Jan. 17, 2026	Ver/Rev:	Sheet: 1 of 1	Scale: NTS	Tolerance: +/-0.25"	Dwg Units: in

DAIKIN
13600 Industrial Park Blvd, Minneapolis, MN 55441
www.DaikinApplied.com Software Version: 13.91

All opening dimensions have a 1" mounting flange along the inner edge. The actual airflow area of the opening is 2" smaller in each dimension.

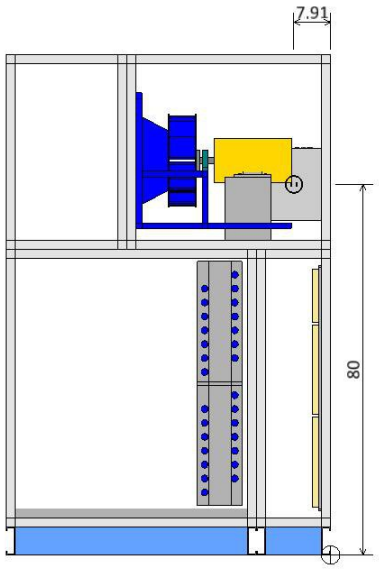

LEFT ELEVATION VIEW

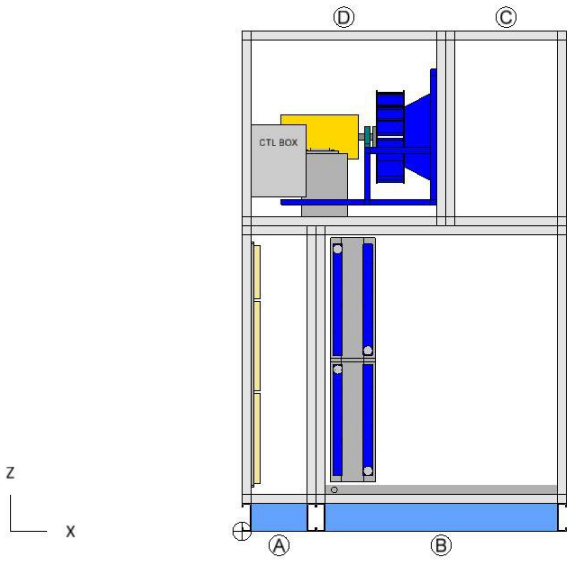

RIGHT ELEVATION VIEW

Component Key

	Type	X	Y	Z	Volts	Phase
Ⓓ	Supply Fan Fan	7.91	96.00	80.00	460	3

Note: Dimensions are measured from the origin point.

Electrical Connections	Unit Tag: AHU-2 (Klenk) Final			Sales Office: HTS Texas		
Product: Vision Air Handler	Project Name: Klein ISD Klenk ES AHU replacements			Sales Engineer:		
Model: CAH030GDGM	Jan. 17, 2026	Ver/Rev:	Sheet: 1 of 1	Scale: NTS	Tolerance: +/-0.25"	Dwg Units: in

DAIKIN
13600 Industrial Park Blvd, Minneapolis, MN 55441
www.DaikinApplied.com Software Version: 13.91

All opening dimensions have a 1" mounting flange along the inner edge. The actual airflow area of the opening is 2" smaller in each dimension.

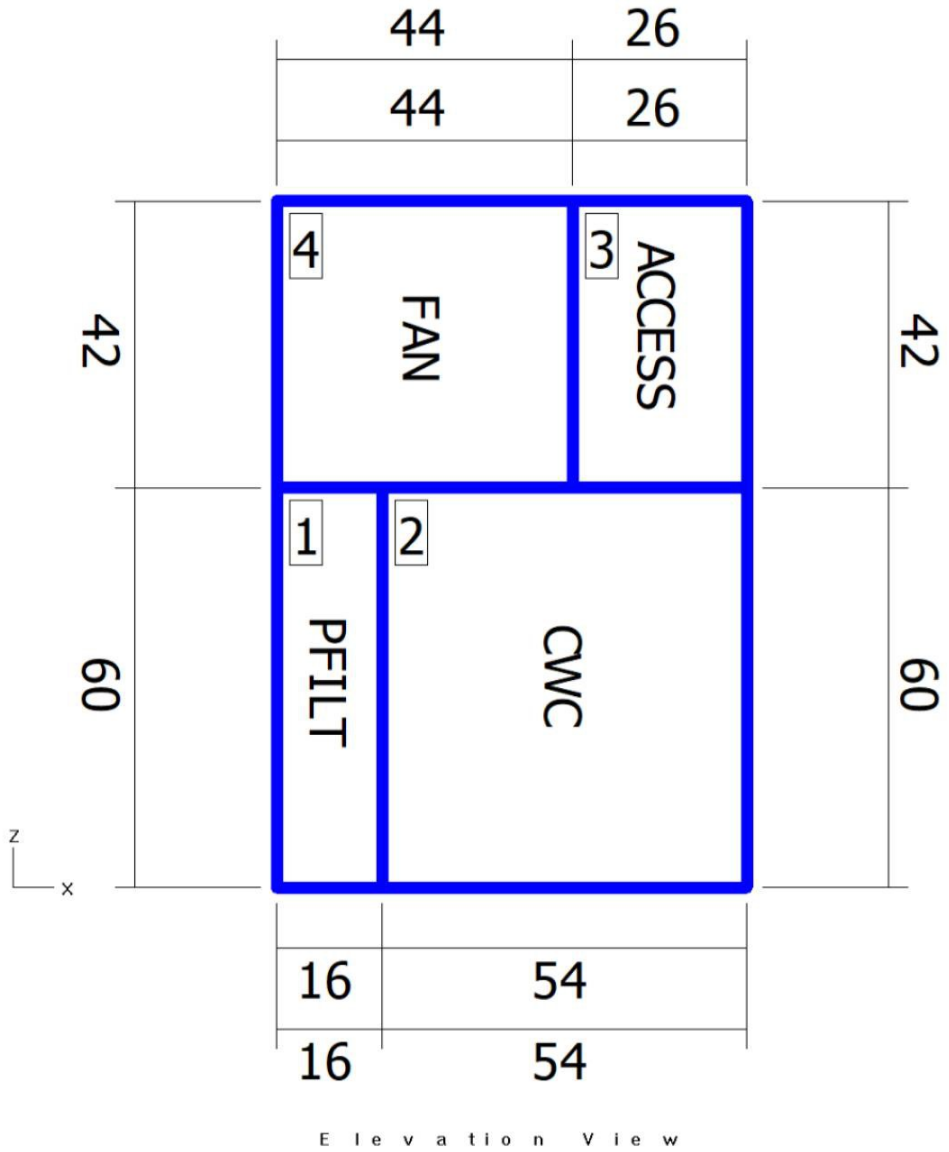

Elevation View

Shipping Sections

Section	Weight (lb)	X	Y	Z
Section 1	420.51	16	96	60
Section 2	1813.44	54	96	60
Section 3	327.38	26	96	42
Section 4	1384.76	44	96	42
Total Unit	3946.10	70	96	102

Note: Base rails, curb ready base, coil connectors, drain connectors, and control boxes not included in height X, Y, Z dimensions. Shipping section may be 2" longer in air flow direction due to internal splice joint.

Shipping Sections	Unit Tag: AHU-2 (Klenk) Final			Sales Office: HTS Texas		
Product: Vision Air Handler	Project Name: Klein ISD Klenk ES AHU replacements			Sales Engineer:		
Model: CAH030GDGM	Jan. 17, 2026	Ver/Rev:	Sheet: 1 of 1	Scale: NTS	Tolerance: +/-0.25"	Dwg Units: in

DAIKIN
13600 Industrial Park Blvd, Minneapolis, MN 55441
www.DaikinApplied.com Software Version: 13.91

All opening dimensions have a 1" mounting flange along the inner edge. The actual airflow area of the opening is 2" smaller in each dimension.

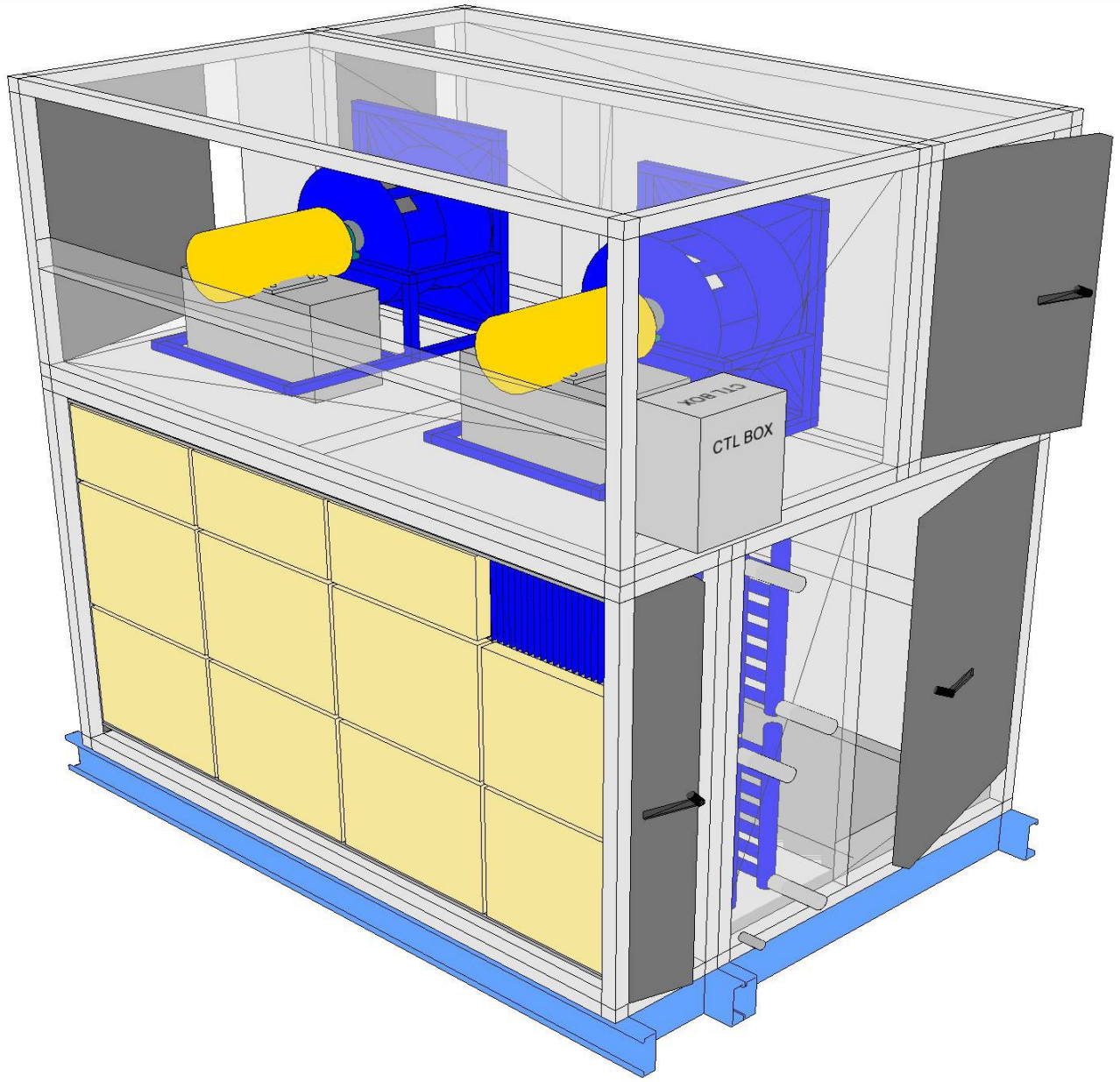

Product Drawing	Unit Tag: AHU-2 (Klenk) Final			Sales Office: HTS Texas		
Product: Vision Air Handler	Project Name: Klein ISD Klenk ES AHU replacements			Sales Engineer:		
Model: CAH030GDGM	Jan. 17, 2026	Ver/Rev:	Sheet: 1 of 1	Scale: NTS	Tolerance: +/-0.25"	Dwg Units: in

DAIKIN
13600 Industrial Park Blvd, Minneapolis, MN 55441
www.DaikinApplied.com Software Version: 13.91

All opening dimensions have a 1" mounting flange along the inner edge. The actual airflow area of the opening is 2" smaller in each dimension.

Daikin AHU Fan Curve

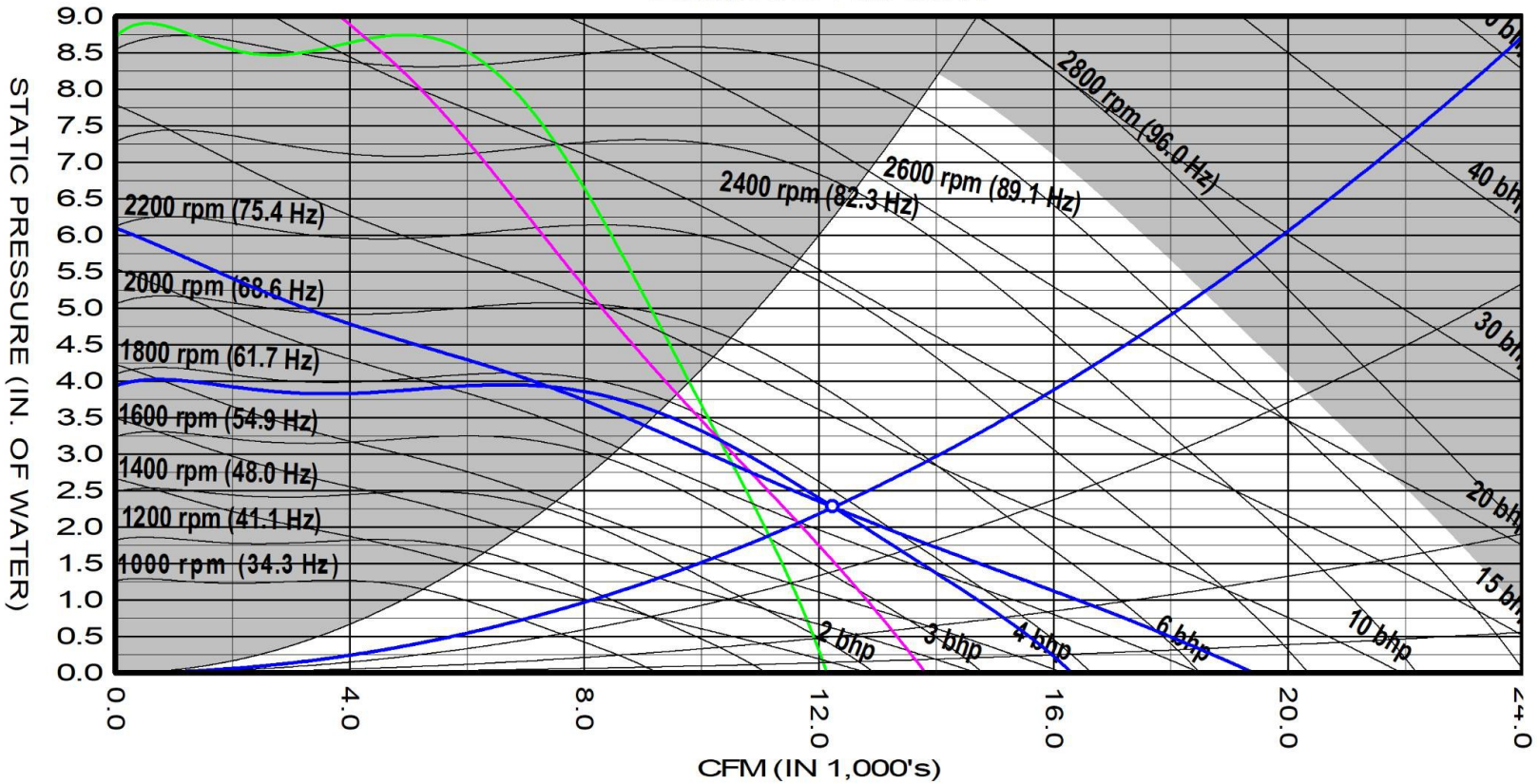

Green line = fan curve for 1 fan(s) at max speed

Red line = BHP curve for 1 fan(s) at max power of selected motor

AF 20 DD PLENUM 9BL (100% Width) 1x2 Supply Fan at Standard Conditions					
Air volume	12245	cfm	Fan speed	1764	rpm
Total static	2.27	insWg	Max speed	2674	rpm
Fan Shaft Power	6.9	bhp	Efficiency	63.1	%
Approx VFD Setting	60.5	Hz	Motor Speed	1750	rpm
Fan Energy Index(FEI)	1.39		Redundancy	90.8	%
Unit tagging	AHU-2 (Klenk) Final		Date	January-17-2026	
Job name	Klein ISD Klenk ES AHU replacements		Time	09:41	

AHRI CERTIFIED

Supply fan performance is certified in accordance with the Central Station Air-Handling Unit Certification Program, which is based on AHRI Standard 430.

Job Information	Technical Data Sheet
Job Name	Klein ISD Klenk ES AHU replacements
Date	January 17 2026
Submitted By	Salas O'Brien
Software Version	13.82
Unit Tag	AHU-3 (Klenk) Final

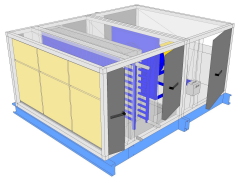

Unit Overview

Model Number	Supply					
	Air Volume cfm	Static Pressure		External Dimensions		
		External inWc	Total inWc	Height in	Width in	Length in
CAH014GDGM	6660	0.60	2.26	42*	74*	98

**Not including base rails, coil connectors, drain connectors and control boxes.*

Unit

Model Number:	CAH014GDGM		
Approval:	ETL Listed / ETL Listed to Canadian Safety Standards (ETL Label / ETLc Label)		
Outer Panel:	18 gauge G90 Galvanized Steel (unpainted)		
Liner:	24 gauge Galvanized Steel (unless noted per section)		
Insulation:	R-13 Injected Foam		
Unit Configuration:	Inline horizontal	**Drive (Handling) Location:**	Right
Base:	6" formed channel	**Wall Thickness:**	2 in
Altitude:	0 ft	**Parts Warranty:**	Additional One Year, Two Year Total

Panel Filter

Component: 1 | Length: 16 in | Shipping Section: 1

Type	Efficiency	Nominal Face Velocity	Actual Face Velocity	Actual Face Area	Air Volume	Filter Loading
Pre Pleat	MERV 13	434 ft/min	394 ft/min	16.9 ft²	6660 cfm	Side

Air Pressure Drop				Number of Filters	Height	Width	Depth
Clean Air	Mean Air	Dirty Air	User Spec				
0.25 inWc	**0.63** inWc	1.00 inWc	N/A	3	24 in	24 in	2 in
				3	12 in	24 in	2 in

Door

Location	Drive Side Door Width	Opp. Drv. Side Door Width	Opening
Both sides	8 in	8 in	Outward

Special Options

Sound Baffle

(As casing details)

Special Text

Extra filters 1 set(s)

Chilled Water Coil

Component: 2 | Length: 38 in | Shipping Section: 1

Coil Model	Total Capacity	Sensible Capacity	Number of Coils	Number of Rows	Fins per Inch	Tube Diameter	Tube Spacing (Face x Row)
5WH0808B	258746 Btu/hr	168652 Btu/hr	1	8	8	0.625 in	1.50 in x 1.299 in

Coil Operating Weight	Coil Dry Weight
441 lb	316 lb

Air Volume	Air Temperature				Coil Air Pressure Drop	Finned Height	Finned Length	Face Area	Face Velocity
	Entering		Leaving						
	Dry Bulb	Wet Bulb	Dry Bulb	Wet Bulb					
6660 cfm	78.0 °F	67.0 °F	54.8 °F	54.5 °F	0.80 inWc	33 in	61 in	13.98 ft²	476 ft/min

Water

Entering	Leaving	Flow Rate	Pressure Drop	Velocity	Fluid Volume	Fluid Weight
45.0 °F	59.6 °F	35.50 gpm	14.80 ftHd	3.50 ft/s	15.0 gal	125.00 lb

Connection [Data Per Coil]				Min. Fin Surface Temp.	Min. Tube Wall Surface Temp.	Fouling Factor
Type	Size	Location	Material			
Threaded	1.50 in	Drive side	Carbon steel	45.0 °F	45.0 °F	0.000

Material				Drain Pan	Drain Side
Fin	Tube	Header	Case		
Aluminum .0075 in	Copper .020 in	Copper	Stainless steel	Stainless steel	Drive side

AHRI 410 Certification

Certified in accordance with the AHRI Forced-Circulation Air-Cooling and Air-Heating Coils Certification Program which is based on AHRI Standard 410 within the Range of Standard Rating Conditions listed in Table 1 of the Standard. Certified units may be found in the AHRI Directory at www.ahridirectory.org

Door

Location	Drive Side Door Width	Opp. Drv. Side Door Width	Opening
Both sides	18 in	18 in	Outward

Supply Fan

Component: 3 | Length: 44 in | Shipping Section: 2

Fan Performance

Air Volume	Static Pressure			Fan Energy Index(FEI)	Total Input Power	Fan Shaft Power	Fan Wheel Speed		Outlet Velocity
	External	Total	Cabinet				Operating	Maximum	
6660 cfm	0.60 inWc	2.26 inWc	0.24 inWc	1.28	3.3 kW	3.58 BHP	1476 rpm	2403 rpm	N/A

Fan Data

Fan Type	Blade Type / Class	Nominal Fan Size	Quantity of Fans	Wheel Diameter	Material Type	Number of Blades	Discharge	Motor Location
Centrifugal - Plenum	Airfoil / 2	DDPL22	1	22.25 in	Aluminum	9	End, single opening	Behind Fan

Motor Data

Power	Electrical Supply	Speed	Efficiency	Enclosure	Frame Size	Supplier	Number of Poles	Lock Rotor Current	Full Load Current
10.0 HP	460/60/3 V/Hz/Phase	1750 rpm	Premium	TEFC	215 T frame	Generic	4	106.62 A	12.70 A

Fan Options

Shaft Grounding Kit:	Provided	Isolator Type:	Spring

VFD/Starter/Disconnect Data

Selection Type:	External J-Box	Vendor:	Factory Standard
Voltage:	460 V	Height x Width x Depth:	6.00 in x 6.00 in x 4.00 in
Mounting:	Door Side	Enclosure:	NEMA 1

Door

Location	Drive Side Door Width	Opp. Drv. Side Door Width	Opening
Both sides	28 in	30 in	Outward

Unit Sound Power (dB)

Type	63 Hz	125 Hz	250 Hz	500 Hz	1000 Hz	2000 Hz	4000 Hz	8000 Hz
Radiated:	69	72	71	62	57	51	46	51
Unit Discharge:	79	72	85	78	79	79	75	66
Unit Return:	73	76	82	76	70	68	60	51

Shipping Section Details

Section	Length in	Weight lb	Corner Weights (lb)				Center of Gravity (in)		
			P1	P2	P3	P4	XX	YY	ZZ
1	54	1174	307	289	280	298	27	36	23
2	44	986	258	250	235	243	21	36	20
Entire Unit	**98**	**2160**	**555**	**529**	**525**	**551**	**49**	**36**	**22**

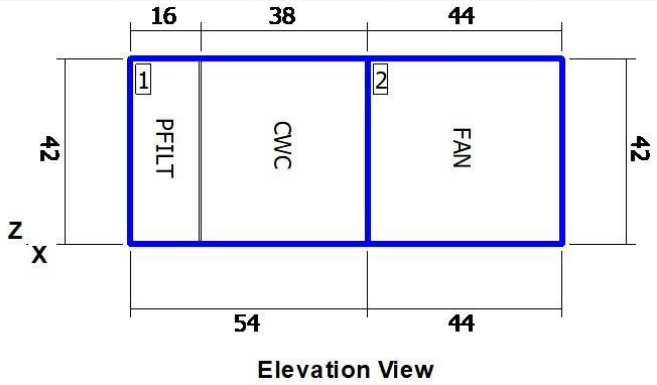

Elevation View

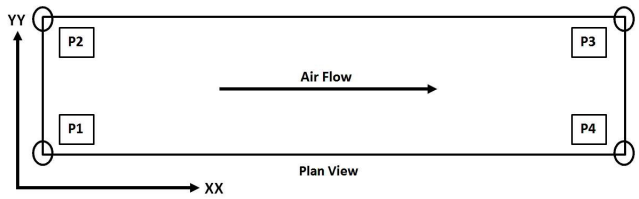

NOTE: Special components aren't included in the corner weights and center of gravity data.

NOTE: Shipping weights listed do not include weight of water (listed in coil section(s) above.

Shipping Protection

None

Supply Static Pressure Drop

Component	Option	Static Pressure Drop
Panel Filter	Panel Filter	0.63 insWg
Chilled Water coil	Chilled Water coil	0.80 insWg
Supply Fan	Cabinet	0.24 insWg
External Static	External Static	0.60 insWg
Total Supply Fan Static		2.26 insWg

Minimum Recommended Drain Pan Trap Dimensions

Shipping Section	Component	H
1	Chilled Water coil	3.36

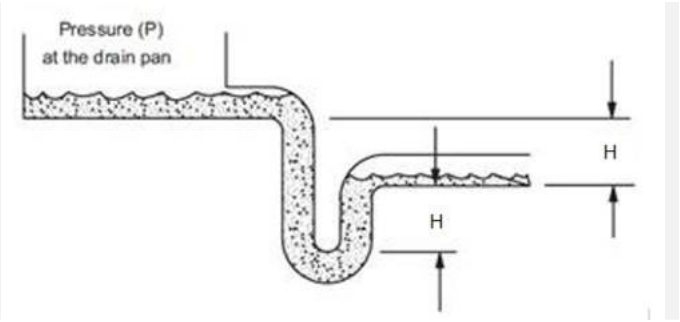

Dimensions provided as a courtesy and are recommended minimums only. Daikin is not responsible for supplying or designing drain pan traps and is not responsible for any damage caused by incorrect trap heights. The dimensions listed above should be reviewed and approved by a licensed plumbing professional.

This calculation is based on an assumption that 0.25 inches of the external static pressure is in the return duct and the remainder is in the supply duct. If actual conditions vary from this assumption then contact Applications for new trap height recommendations.

AHRI Certification

Certified by the AHRI Central Station Air-Handling Unit (AHU) Certification Program, which is based on AHRI Standard 430/431. AHRI certified units are subject to rigorous and continuous testing, have performance ratings independently measured and are third-party verified. Certified units may be found in the AHRI Directory at www.ahridirectory.org.

Notes

Standard
1. As a standalone component, unit meets or exceeds requirements of ASHRAE 90.1 - 2007. The approving authority is responsible for compliance of multi - component building systems.

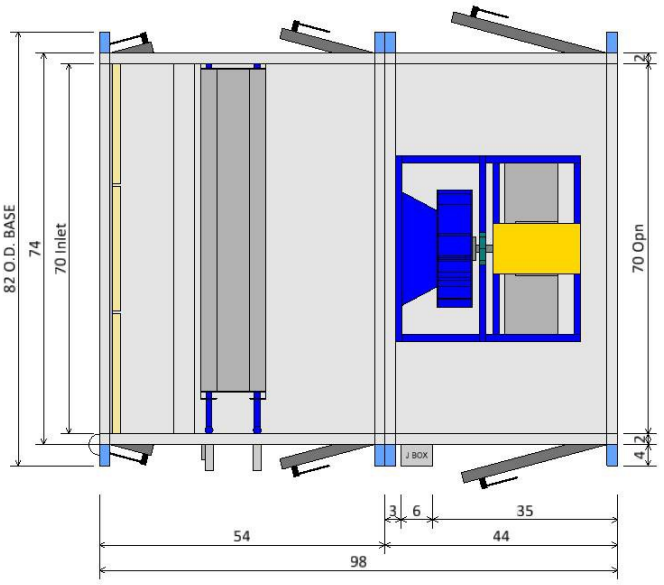

PLAN VIEW

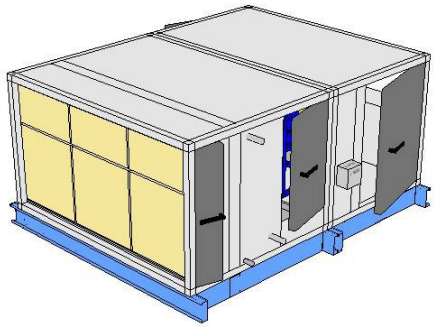

ISOMETRIC VIEW

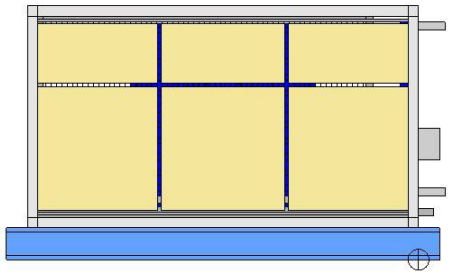

FRONT END VIEW

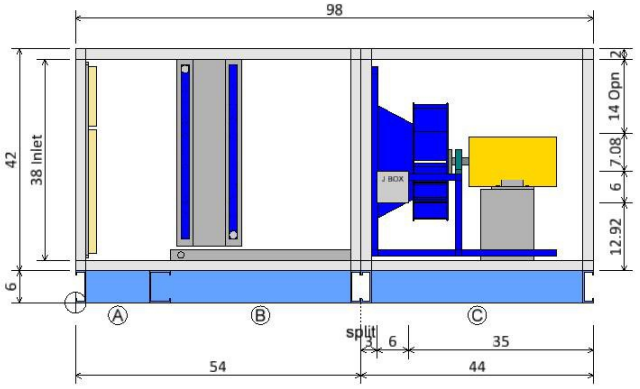

ELEVATION VIEW

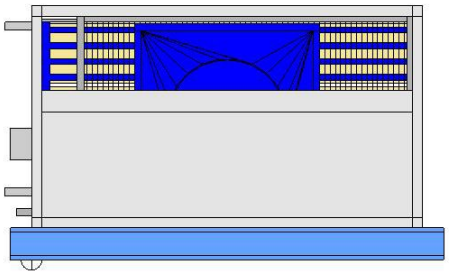

REAR END VIEW

Plan/Elevation	Unit Tag: AHU-3 (Klenk) Final			Sales Office: HTS Texas		
Product: Vision Air Handler	Project Name: Klein ISD Klenk ES AHU replacements			Sales Engineer:		
Model: CAH014GDGM	Jan. 17, 2026	Ver/Rev:	Sheet: 1 of 1	Scale: NTS	Tolerance: +/-0.25"	Dwg Units: in

DAIKIN
13600 Industrial Park Blvd, Minneapolis, MN 55441
www.DaikinApplied.com Software Version: 13.91

All opening dimensions have a 1" mounting flange along the inner edge. The actual airflow area of the opening is 2" smaller in each dimension.

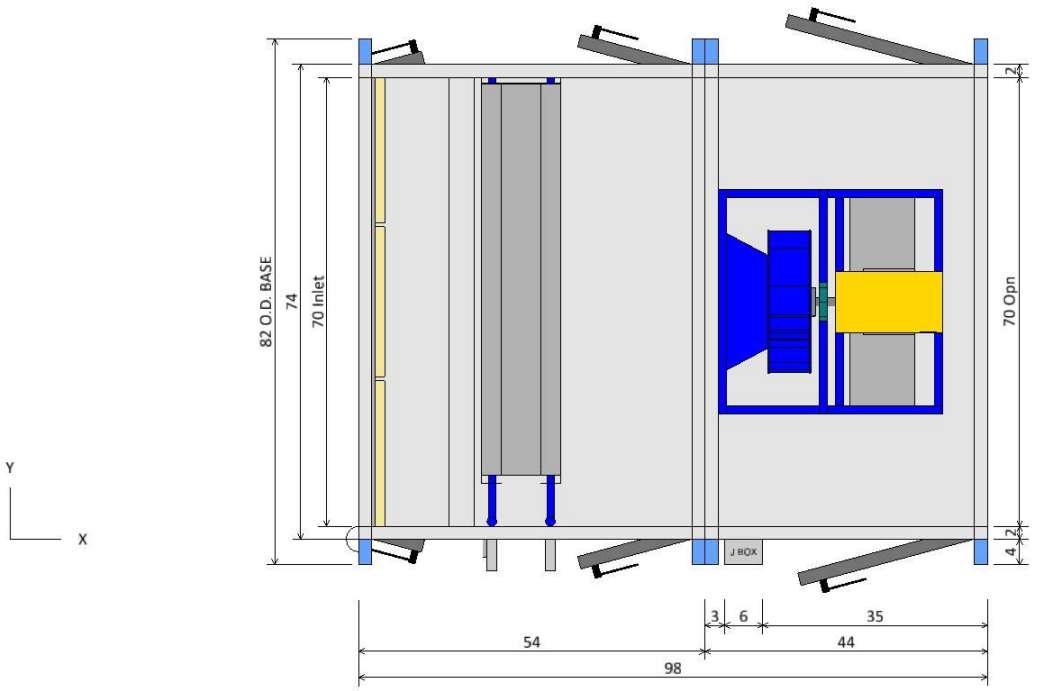

PLAN VIEW

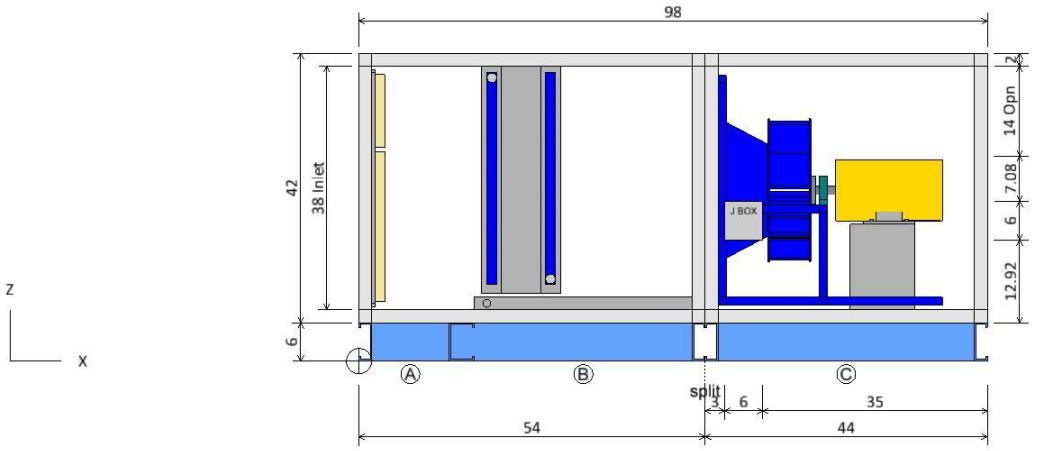

ELEVATION VIEW

Component Key		
Ⓐ	Panel Filter	
	Filter Type:	PrePleat (MERV 13)
	Right Door (WxH):	8 ins x 38 ins
	Left Door (WxH):	8 ins x 38 ins
Ⓑ	Chilled Water coil	
	Coil Model:	5WH0808B
	Total Capacity:	258746.0 Btu/hr
	Right Door (WxH):	18 ins x 32 ins
	Left Door (WxH):	18 ins x 32 ins
Ⓒ	Supply Fan	
	Fan Type:	Centrifugal - Plenum
	Fan Size (Class):	22 (2)
	Air Flowrate:	6660.0 cfm
	T.S.P:	2.3 insWg
	Motor Power:	10.0 HP
	Right Door (WxH):	28 ins x 38 ins
	Left Door (WxH):	30 ins x 38 ins

Plan/Elevation - No Ends	Unit Tag: AHU-3 (Klenk) Final			Sales Office: HTS Texas		
Product: Vision Air Handler	Project Name: Klein ISD Klenk ES AHU replacements			Sales Engineer:		
Model: CAH014GDGM	Jan. 17, 2026	Ver/Rev:	Sheet: 1 of 1	Scale: NTS	Tolerance: +/-0.25"	Dwg Units: in

DAIKIN
13600 Industrial Park Blvd, Minneapolis, MN 55441
www.DaikinApplied.com Software Version: 13.91

All opening dimensions have a 1" mounting flange along the inner edge. The actual airflow area of the opening is 2" smaller in each dimension.

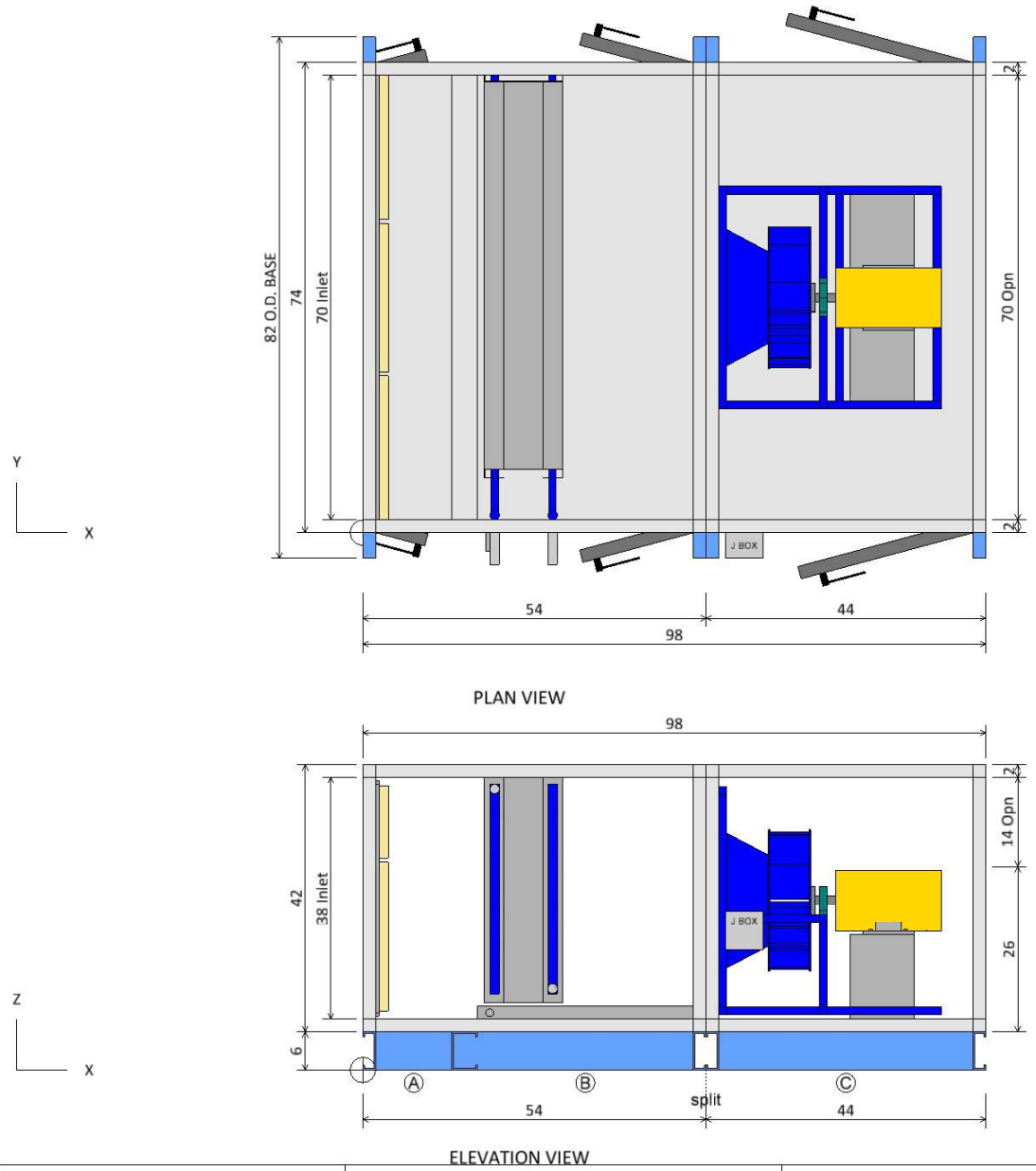

Component Key

	Type	X	Y	Z	Wid	Hgt
Ⓐ	Panel Filter Opening	0.00	2.00	8.00	70.00	38.00
Ⓒ	Supply Fan Fan Discharge	98.00	2.00	32.00	70.00	14.00

Note: Dimensions are measured from the origin point.
Note: Openings with or without dampers are recessed into the unit by approximately 1.75 in.

Opening/Damper Connections	Unit Tag: AHU-3 (Klenk) Final			Sales Office: HTS Texas		
Product: Vision Air Handler	Project Name: Klein ISD Klenk ES AHU replacements			Sales Engineer:		
Model: CAH014GDGM	Jan. 17, 2026	Ver/Rev:	Sheet: 1 of 1	Scale: NTS	Tolerance: +/-0.25"	Dwg Units: in

DAIKIN
13600 Industrial Park Blvd, Minneapolis, MN 55441
www.DaikinApplied.com Software Version: 13.91

All opening dimensions have a 1" mounting flange along the inner edge. The actual airflow area of the opening is 2" smaller in each dimension.

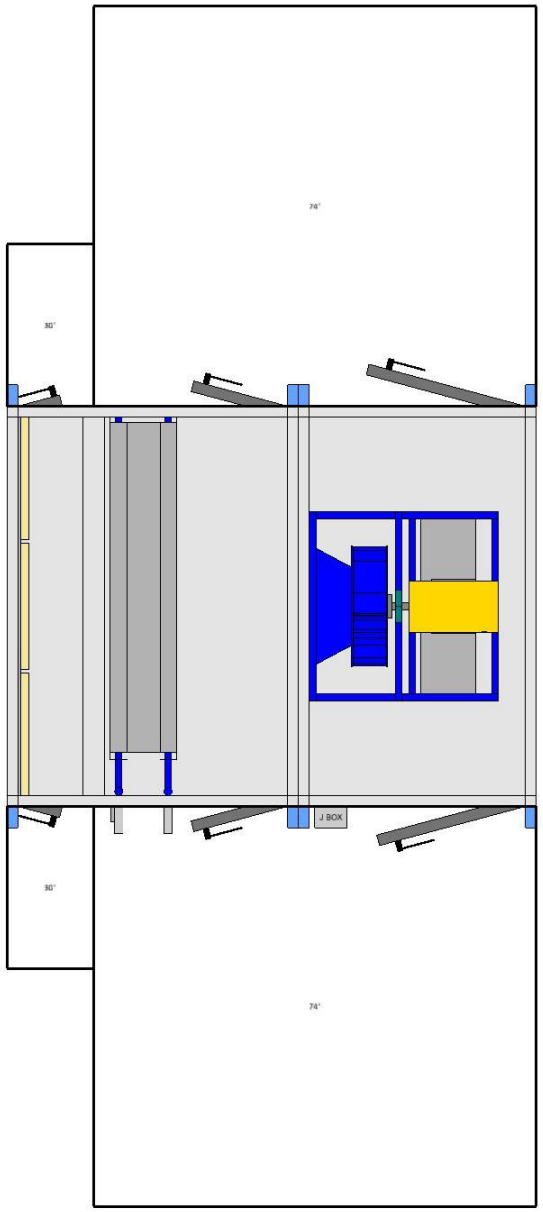

PLAN VIEW

Notes
Check local electrical component service clearance codes for specific distances. Access is only required on one side of the unit.

Service Clearance View	Unit Tag: AHU-3 (Klenk) Final			Sales Office: HTS Texas		
Product: Vision Air Handler	Project Name: Klein ISD Klenk ES AHU replacements			Sales Engineer:		
Model: CAH014GDGM	Jan. 17, 2026	Ver/Rev:	Sheet: 1 of 1	Scale: NTS	Tolerance: +/-0.25"	Dwg Units: in

DAIKIN
13600 Industrial Park Blvd, Minneapolis, MN 55441
www.DaikinApplied.com Software Version: 13.91

All opening dimensions have a 1" mounting flange along the inner edge. The actual airflow area of the opening is 2" smaller in each dimension.

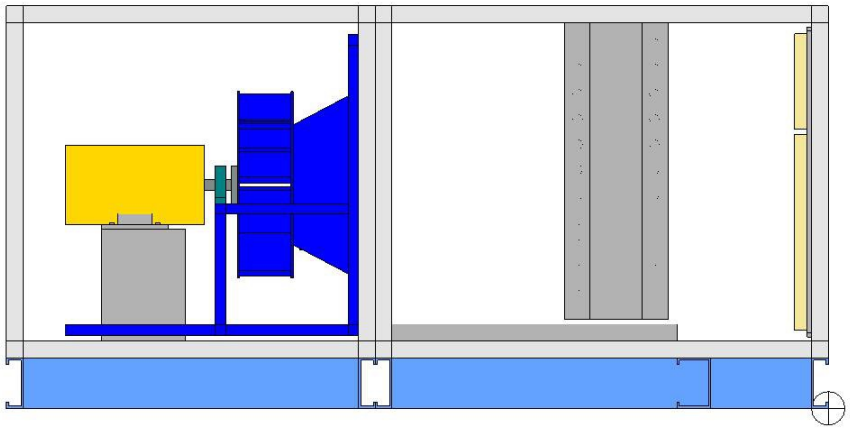

LEFT ELEVATION VIEW

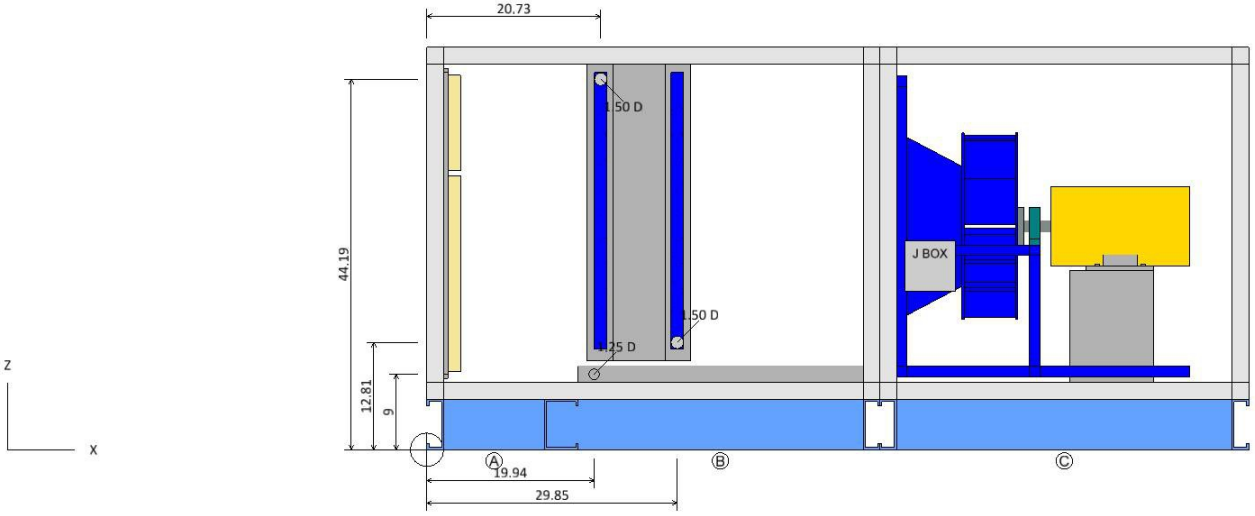

RIGHT ELEVATION VIEW

Coil and Drain Connections

	Type	X	Y	Z	Diam
Ⓑ	Chilled Water coil Condensate drain conn:	19.94	-2.90	9.00	1.25
	Cold water inlet:	29.85	-7.00*	12.81	1.50
	Cold water outlet:	20.73	-7.00*	44.19	1.50

Notes:
Dimensions are measured from the origin point.
* value varies +/- 1 in.

Coil and Drain Connections	Unit Tag: AHU-3 (Klenk) Final			Sales Office: HTS Texas		
Product: Vision Air Handler	Project Name: Klein ISD Klenk ES AHU replacements			Sales Engineer:		
Model: CAH014GDGM	Jan. 17, 2026	Ver/Rev:	Sheet: 1 of 1	Scale: NTS	Tolerance: +/-0.25"	Dwg Units: in

DAIKIN
13600 Industrial Park Blvd, Minneapolis, MN 55441
www.DaikinApplied.com Software Version: 13.91

All opening dimensions have a 1" mounting flange along the inner edge. The actual airflow area of the opening is 2" smaller in each dimension.

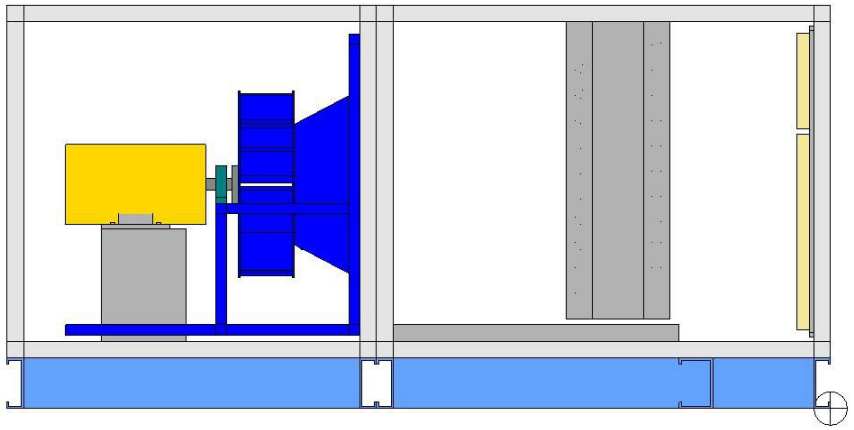

LEFT ELEVATION VIEW

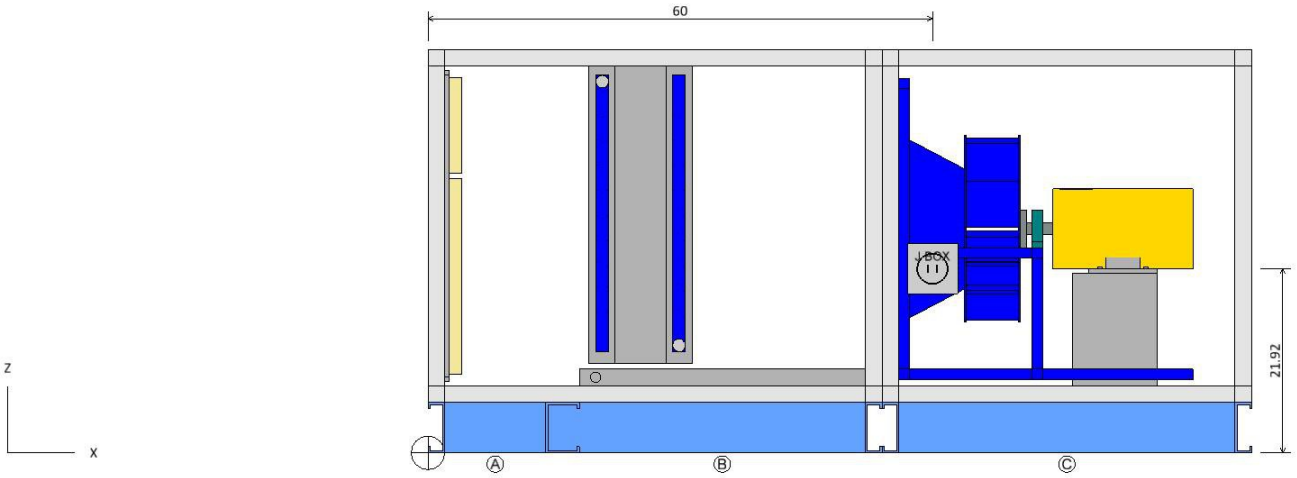

RIGHT ELEVATION VIEW

Component Key

	Type	X	Y	Z	Volts	Phase
Ⓒ	Supply Fan Fan	60.00	0.00	21.92	460	3

Note: Dimensions are measured from the origin point.

Electrical Connections	Unit Tag: AHU-3 (Klenk) Final			Sales Office: HTS Texas		
Product: Vision Air Handler	Project Name: Klein ISD Klenk ES AHU replacements			Sales Engineer:		
Model: CAH014GDGM	Jan. 17, 2026	Ver/Rev:	Sheet: 1 of 1	Scale: NTS	Tolerance: +/-0.25"	Dwg Units: in

DAIKIN
13600 Industrial Park Blvd, Minneapolis, MN 55441
www.DaikinApplied.com Software Version: 13.91

All opening dimensions have a 1" mounting flange along the inner edge. The actual airflow area of the opening is 2" smaller in each dimension.

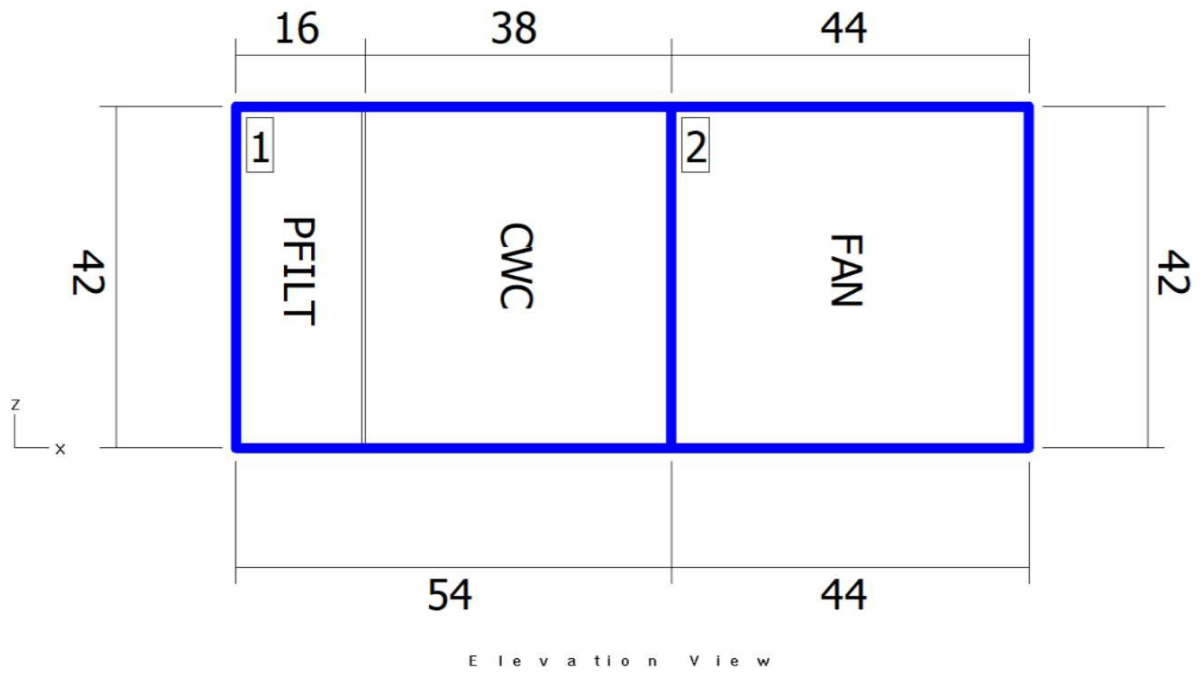

Elevation View

Shipping Sections

Section	Weight (lb)	X	Y	Z
Section 1	1173.55	54	74	42
Section 2	985.69	44	74	42
Total Unit	2159.23	98	74	42

Note: Base rails, curb ready base, coil connectors, drain connectors, and control boxes not included in height X, Y, Z dimensions. Shipping section may be 2" longer in air flow direction due to internal splice joint.

Shipping Sections	Unit Tag: AHU-3 (Klenk) Final			Sales Office: HTS Texas		
Product: Vision Air Handler	Project Name: Klein ISD Klenk ES AHU replacements			Sales Engineer:		
Model: CAH014GDGM	Jan. 17, 2026	Ver/Rev:	Sheet: 1 of 1	Scale: NTS	Tolerance: +/-0.25"	Dwg Units: in

DAIKIN
13600 Industrial Park Blvd, Minneapolis, MN 55441
www.DaikinApplied.com Software Version: 13.91

All opening dimensions have a 1" mounting flange along the inner edge. The actual airflow area of the opening is 2" smaller in each dimension.

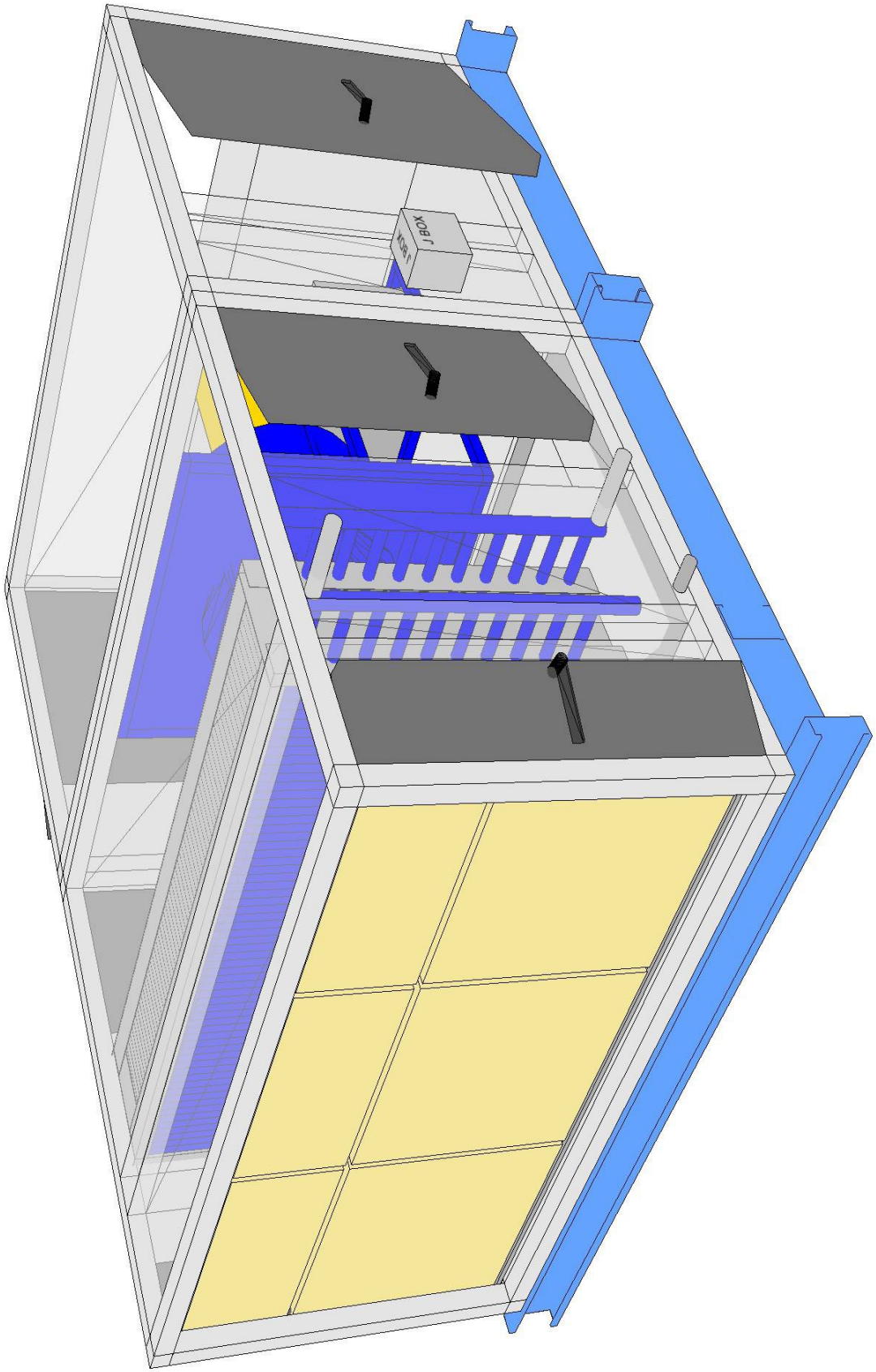

Product Drawing	Unit Tag: AHU-3 (Klenk) Final	Sales Office: HTS Texas
Product: Vision Air Handler	Project Name: Klein ISD Klenk ES AHU replacement	Sales Engineer:
Model: CAH014GDGM	Jan. 17, 2026 | Ver/Rev: | Sheet: 1 of 1 | Scale: NTS | Tolerance: +/-0.25" | Dwg Units: in	

All opening dimensions have a 1" mounting flange along the inner edge. The actual airflow area of the opening is 2" smaller in each dimension.

DAIKIN
13600 Industrial Park Blvd, Minneapolis, MN 55441
www.DaikinApplied.com Software Version: 13.91

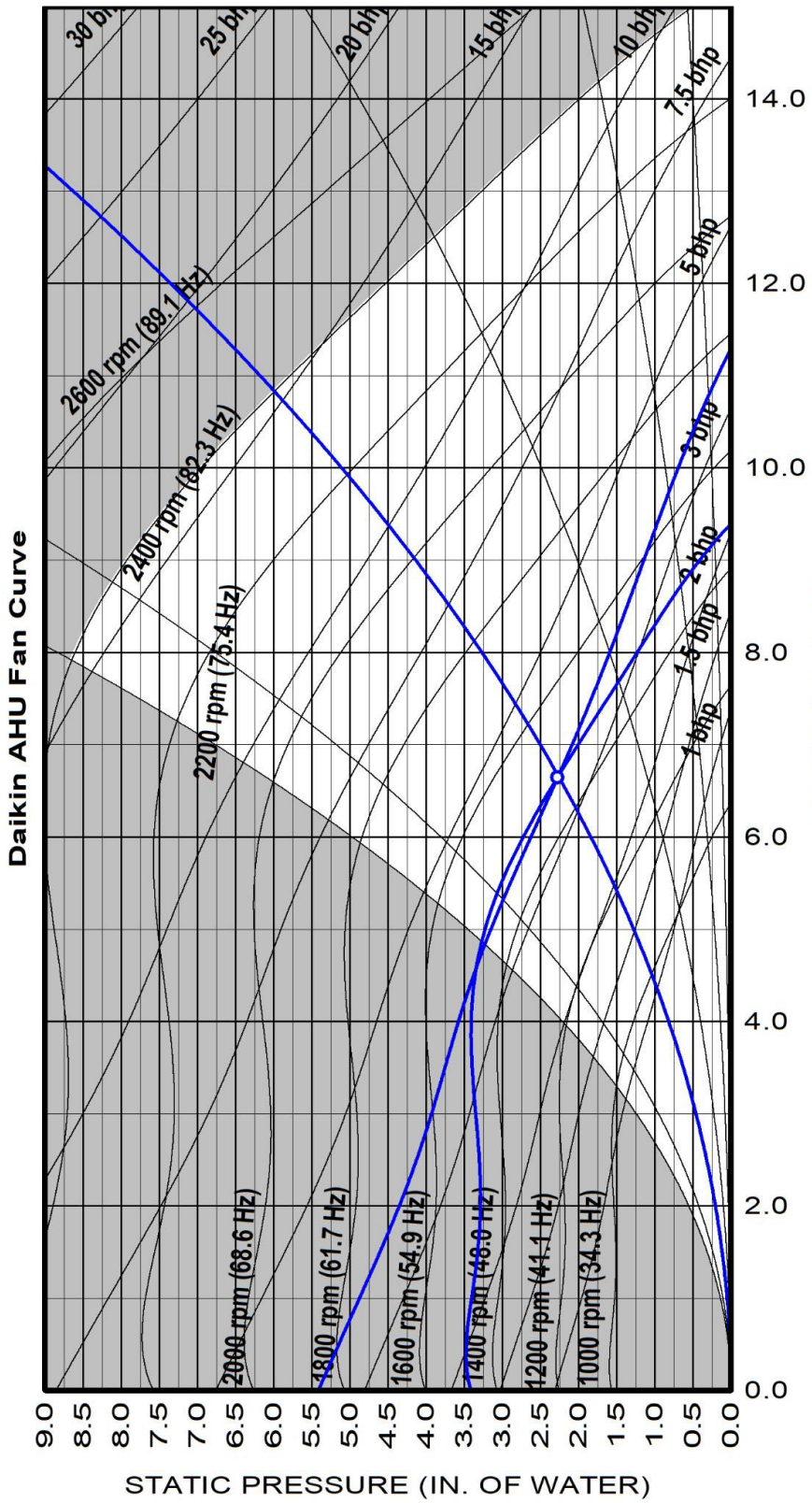

AF 22 DD PLENUM 9BL (100% Width) 1x1 Supply Fan at Standard Conditions					
Air volume	6660	cfm	Fan speed	1476	rpm
Total static	2.26	insWg	Max speed	2403	rpm
Fan Shaft Power	3.6	bhp	Efficiency	66.2	%
Approx VFD Setting	50.6	Hz	Motor Speed	1750	rpm
Fan Energy Index(FEI)	1.28				
Unit tagging	AHU-3 (Klenk) Final		Date	January-17-2026	
Job name	Klein ISD Klenk ES AHU replacements		Time	09:41	

Supply fan performance is certified in accordance with the Central Station Air-Handling Unit Certification Program, which is based on AHRI Standard 430.

Job Information	Technical Data Sheet
Job Name	Klein ISD Klenk ES AHU replacements
Date	January 17 2026
Submitted By	Salas O'Brien
Software Version	13.91
Unit Tag	AHU-5 (Klenk)

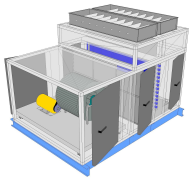

Unit Overview

Model Number	Supply					
	Air Volume cfm	Static Pressure		External Dimensions		
		External inWc	Total inWc	Height in	Width in	Length in
CAH018GMAM	8460	0.75	2.30	48*	76*	106

**Not including base rails, coil connectors, drain connectors and control boxes.*

Unit

Model Number:	CAH018GMAM		
Approval:	ETL Listed / ETL Listed to Canadian Safety Standards (ETL Label / ETLc Label)		
Outer Panel:	18 gauge G90 Galvanized Steel (unpainted)		
Liner:	24 gauge Galvanized Steel (unless noted per section)		
Insulation:	R-13 Injected Foam		
Sound Baffles:	Included in Fan, Plenum, Access and Manual section (unless noted per section)		
Unit Configuration:	Multizone	**Drive (Handling) Location:**	Left
Base:	6" formed channel	**Wall Thickness:**	2 in
Altitude:	0 ft	**Parts Warranty:**	Additional One Year, Two Year Total

Supply Fan	Component: 1	Length: 46 in	Shipping Section: 1

Fan Performance

Air Volume	Static Pressure			Fan Energy Index(FEI)	Total Input Power	Fan Shaft Power	Fan Wheel Speed		Outlet Velocity
	External	Total	Cabinet				Operating	Maximum	
8460 cfm	0.75 inWc	2.30 inWc	0.65 inWc	0.95	5.6 kW	6.04 BHP	913 rpm	1450 rpm	2927 ft/min

Fan Data

Fan Type	Blade Type / Class	Quantity of Fans	Wheel Diameter	Number of Blades	Discharge	Motor Location
Centrifugal DWDI	Forward Curved / 2	1	18.03 in	N/A	Bottom horizontal	To Side of Fan

Motor Data

Power	Electrical Supply	Speed	Efficiency	Enclosure	Frame Size	Supplier	Number of Poles	Lock Rotor Current	Full Load Current
10.0 HP	460/60/3 V/Hz/Phase	1750 rpm	Premium	TEFC	215 T frame	Generic	4	106.62 A	12.50 A

Fan Options

Shaft Grounding Kit:	Provided	Isolator Type:	Spring

Drive Package Data*

Fan Sheave	Motor Sheave	Belt	Number of Belts	Actual Drive S.F.	Bearing Type
2B5V90	2BK52H	BX51	2	1.37	Standard - L50 (200K)

**Daikin Applied reserves the right to provide a different but equivalent drive package*

VFD/Starter/Disconnect Data

Selection Type:	External J-Box	Vendor:	Factory Standard
Voltage:	460 V	Height x Width x Depth:	6.00 in x 6.00 in x 4.00 in
Mounting:	Door Side	Enclosure:	NEMA 1

Door

Location	Drive Side Door Width	Opp. Drv. Side Door Width	Opening
Both sides	30 in	30 in	Outward

Special Options

Sound Baffle	Static Pressure
Sound baffle included	0.65 inWc

Two Deck Multizone	Component: 2	Length: 60 in	Shipping Section: 1 & 2

Discharge Location	Number of Zones	Multizone APD*	Damper Type	Actuation
Vertical / Vertical	8	0.90 inWc	Low leak / Low leak	None - damper mechanically linked

Note : includes coil & balance plate & diffuser

Note : Cabinet height for multizone extends 16 inches above 'External cabinet height' referenced above.
The damper assembly will add 8.38 inches to the cabinet length for horizontal discharge and 8.38 inches to the height for vertical discharge.

Cold Deck Coil

Coil Model	Total Capacity	Sensible Capacity	Number of Coils	Number of Rows	Fins per Inch	Tube Diameter	Tube Spacing (Face x Row)
5WL0806B	270332 Btu/hr	207482 Btu/hr	1	6	8	0.625 in	1.50 in X 1.299 in

Coil Operating Weight	Coil Dry Weight
422 lb	302 lb

Air Volume	Air Temperature				Coil Air Pressure Drop	Finned Height	Finned Length	Face Area	Face Velocity
	Entering		Leaving						
	Dry Bulb	Wet Bulb	Dry Bulb	Wet Bulb					
8460 cfm	77.2 °F	64.4 °F	54.8 °F	53.7 °F	0.64 inWc	39 in	63 in	17.06 ft²	496 ft/min

Water

Entering	Leaving	Flow Rate	Pressure Drop	Velocity	Fluid Volume	Fluid Weight
45.0 °F	53.3 °F	65.10 gpm	8.50 ftHd	3.60 ft/s	14.0 gal	120.00 lb

Connection [Data Per Coil]				Min. Fin Surface Temp.	Min. Tube Wall Surface Temp.	Fouling Factor
Type	Size	Location	Material			
Threaded	2.50 in	Drive side	Carbon steel	45.0 °F	45.0 °F	0.000

Material				Drain Pan	Drain Side	Electro-Fin Coat	Moisture Eliminator
Fin	Tube	Header	Case				
Aluminum .0075 in	Copper .020 in	Copper	Stainless steel	Stainless steel	Drive side	NA	NA

AHRI 410 Certification

Certified in accordance with the AHRI Forced-Circulation Air-Cooling and Air-Heating Coils Certification Program which is based on AHRI Standard 410 within the Range of Standard Rating Conditions listed in Table 1 of the Standard. Certified units may be found in the AHRI Directory at www.ahridirectory.org

Future Hot Deck Coil(60 ins)

Number of Coils	Number of Rows
1	1

Coil Air Pressure Drop	Finned Height	Finned Width	Face Area	Face Velocity
NA inWc	21 in	60 in	8.75 ft²	967 ft/min

Connection Location	Connection Material
Drive side	Carbon steel

Coil Model	Drain Pan	Drain Pan Side
Future Coil (Not Supplied)	NA	NA

AHRI 410 Certification

Coil is NOT certified by AHRI

Door

Location	Drive Side Door Width	Opp. Drv. Side Door Width	Opening
Both sides	20 in	20 in	Outward

Unit Sound Power (dB)

Type	63 Hz	125 Hz	250 Hz	500 Hz	1000 Hz	2000 Hz	4000 Hz	8000 Hz
Radiated:	74	74	64	61	60	50	46	51
Unit Discharge:	84	84	82	82	82	78	75	70
Unit Return:	81	81	79	79	79	75	72	67

Shipping Section Details

Section	Length in	Weight lb	Corner Weights (lb)				Center of Gravity (in)		
			P1	P2	P3	P4	XX	YY	ZZ
1	106	2351	646	590	548	603	51	36	24
2	60	344	262	279	103	86	16	40	14
Entire Unit	**106**	**2695**	**791**	**752**	**768**	**807**	**54**	**37**	**33**

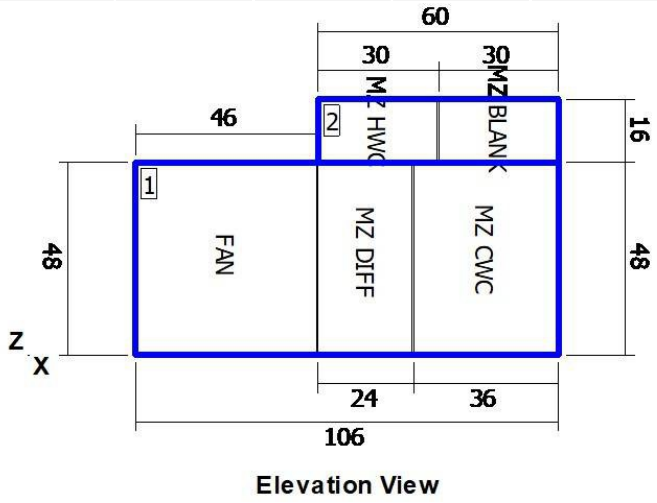

Elevation View

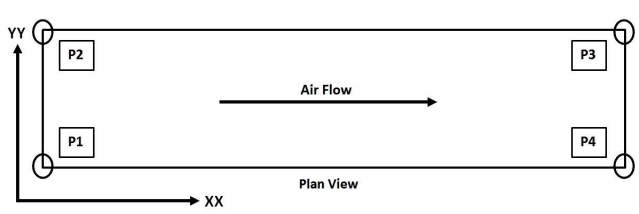

NOTE: Special components aren't included in the corner weights and center of gravity data.

Shipping Protection

None

Supply Static Pressure Drop

Component	Option	Static Pressure Drop
Supply Fan	Cabinet	
Supply Fan	Special	0.65 insWg
Multizone	Multizone	0.90 insWg
External Static	External Static	0.75 insWg
Total Supply Fan Static		2.30 insWg

Minimum Recommended Drain Pan Trap Dimensions

Shipping Section	Component	H
1	Chilled Water coil	1.22

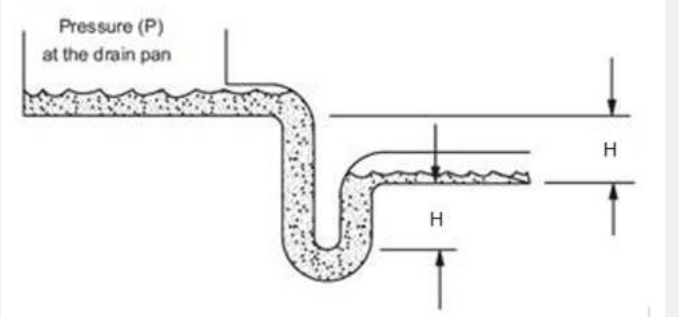

Dimensions provided as a courtesy and are recommended minimums only. Daikin is not responsible for supplying or designing drain pan traps and is not responsible for any damage caused by incorrect trap heights. The dimensions listed above should be reviewed and approved by a licensed plumbing professional.

This calculation is based on an assumption that 0.25 inches of the external static pressure is in the return duct and the remainder is in the supply duct. If actual conditions vary from this assumption then contact Applications for new trap height recommendations.

AHRI Certification



Certified by the AHRI Central Station Air-Handling Unit (AHU) Certification Program, which is based on AHRI Standard 430/431. AHRI certified units are subject to rigorous and continuous testing, have performance ratings independently measured and are third-party verified. Certified units may be found in the AHRI Directory at www.ahridirectory.org.

Notes

Standard
1. As a standalone component, unit meets or exceeds requirements of ASHRAE 90.1 - 2007. The approving authority is responsible for compliance of multi - component building systems.

51MN4W

Klein ISD Klenk ES AHU rep

60

1/17/2026

AHU-5 (Klenk)

Drawing

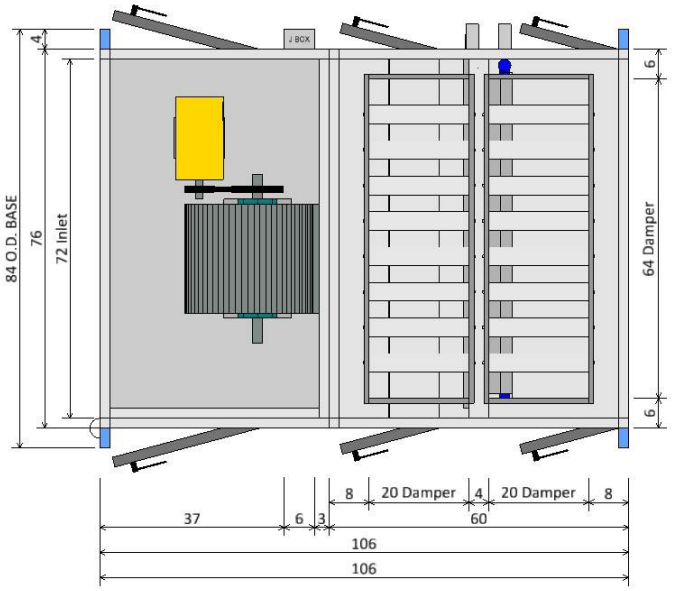

PLAN VIEW

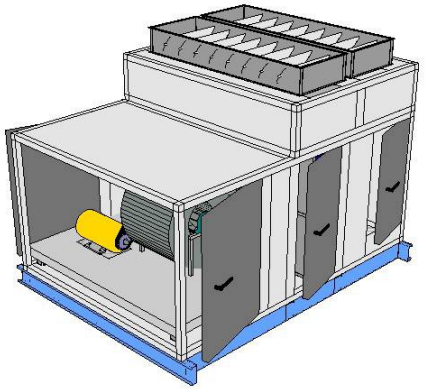

ISOMETRIC VIEW

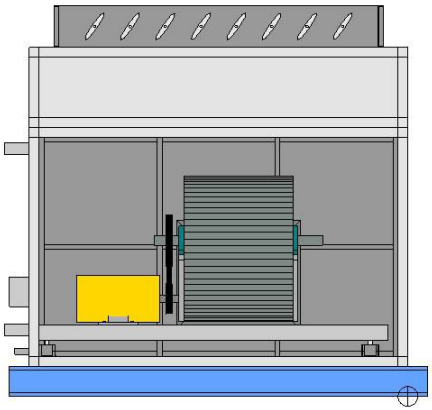

FRONT END VIEW

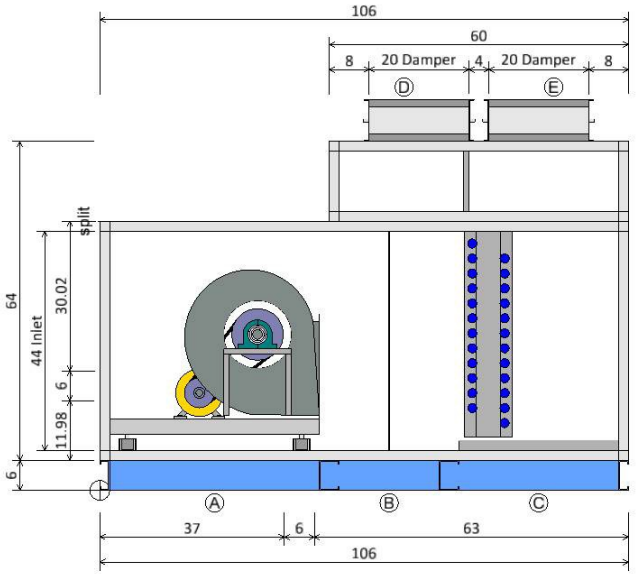

ELEVATION VIEW

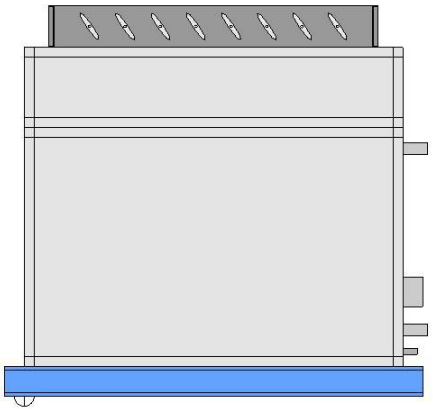

REAR END VIEW

Plan/Elevation	Unit Tag: AHU-5 (Klenk)			Sales Office: HTS Texas		
Product: Vision Air Handler	Project Name: Klein ISD Klenk ES AHU replacements			Sales Engineer:		
Model: CAH018GMAM	Jan. 17, 2026	Ver/Rev:	Sheet: 1 of 1	Scale: NTS	Tolerance: +/-0.25"	Dwg Units: in

DAIKIN

13600 Industrial Park Blvd, Minneapolis, MN 55441

www.DaikinApplied.com Software Version: 13.91

All opening dimensions have a 1" mounting flange along the inner edge. The actual airflow area of the opening is 2" smaller in each dimension.

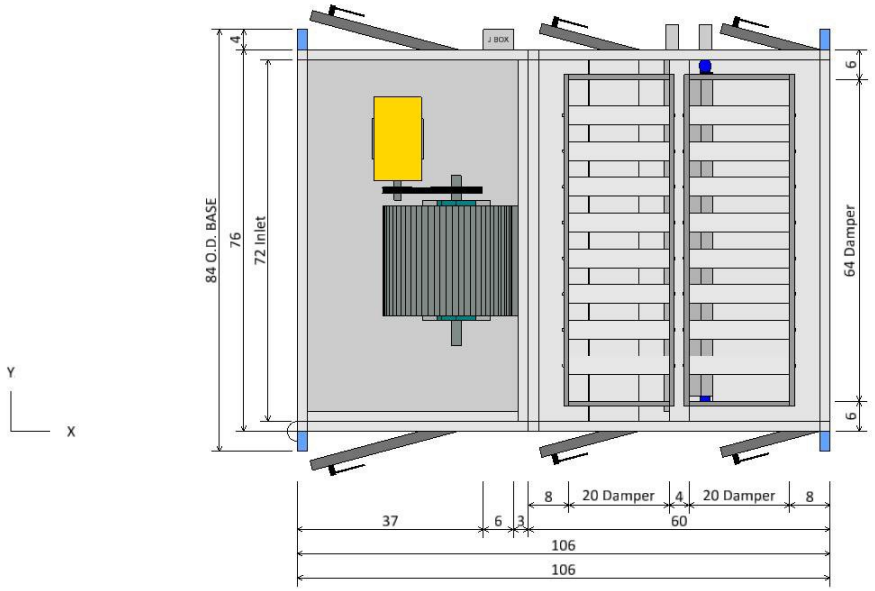

PLAN VIEW

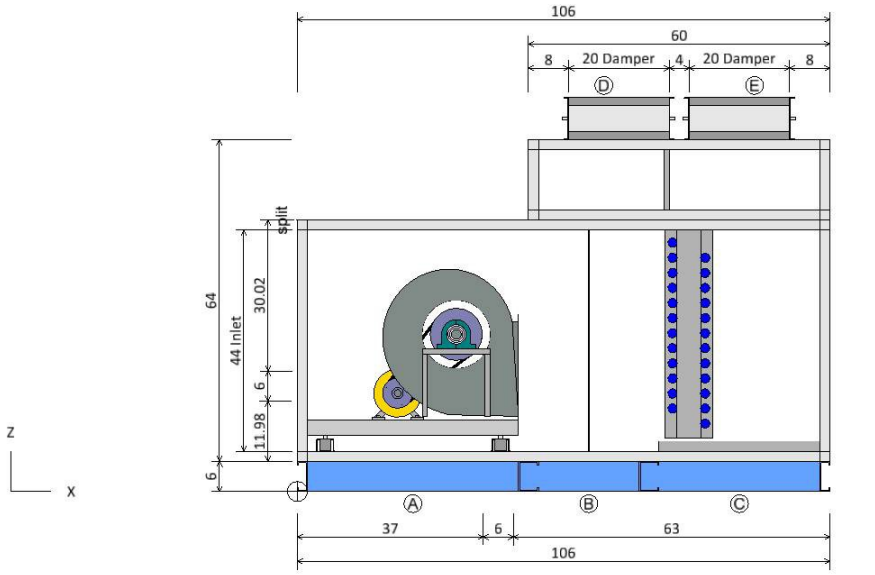

ELEVATION VIEW

Component Key		
Ⓐ	Supply Fan	
	Fan Type:	Centrifugal DWDI
	Fan Size (Class):	18 (2)
	Air Flowrate:	8460.0 cfm
	T.S.P:	2.3 insWg
	Motor Power:	10.0 HP
	Right Door (WxH):	30 ins x 44 ins
	Left Door (WxH):	30 ins x 44 ins
Ⓑ	Diffuser	
	Right Door (WxH):	20 ins x 44 ins
	Left Door (WxH):	20 ins x 44 ins
Ⓒ	Chilled Water coil	
	Coil Model:	5WL0806B
	Total Capacity:	270332.0 Btu/hr
	Right Door (WxH):	20 ins x 38 ins
	Left Door (WxH):	20 ins x 38 ins
Ⓓ	Hot Water Coil	
	Coil Model:	5WH0001C
	Total Capacity:	0.0 Btu/hr
Ⓔ	Access Section	

Plan/Elevation - No Ends	Unit Tag: AHU-5 (Klenk)			Sales Office: HTS Texas		
Product: Vision Air Handler	Project Name: Klein ISD Klenk ES AHU replacements			Sales Engineer:		
Model: CAH018GMAM	Jan. 17, 2026	Ver/Rev:	Sheet: 1 of 1	Scale: NTS	Tolerance: +/-0.25"	Dwg Units: in

DAIKIN
13600 Industrial Park Blvd, Minneapolis, MN 55441
www.DaikinApplied.com Software Version: 13.91

All opening dimensions have a 1" mounting flange along the inner edge. The actual airflow area of the opening is 2" smaller in each dimension.

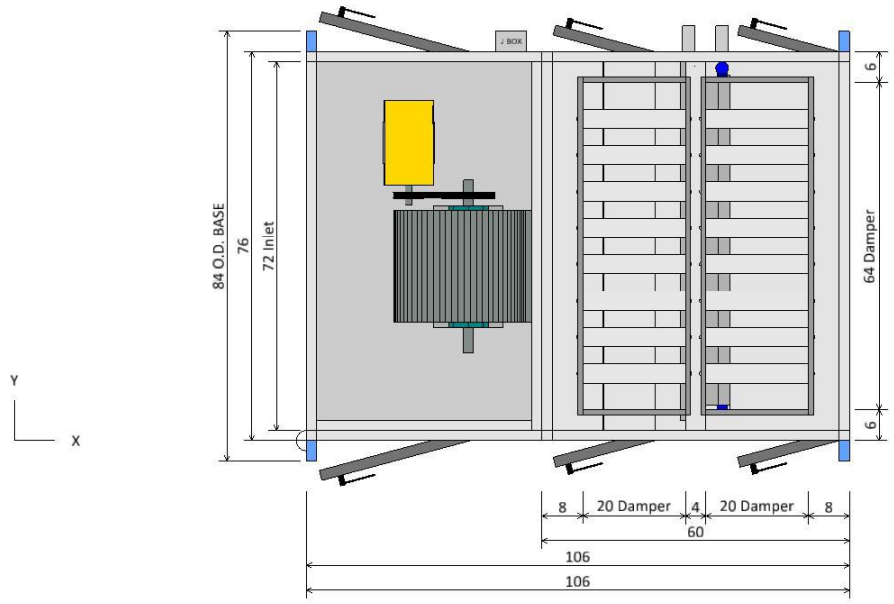

PLAN VIEW

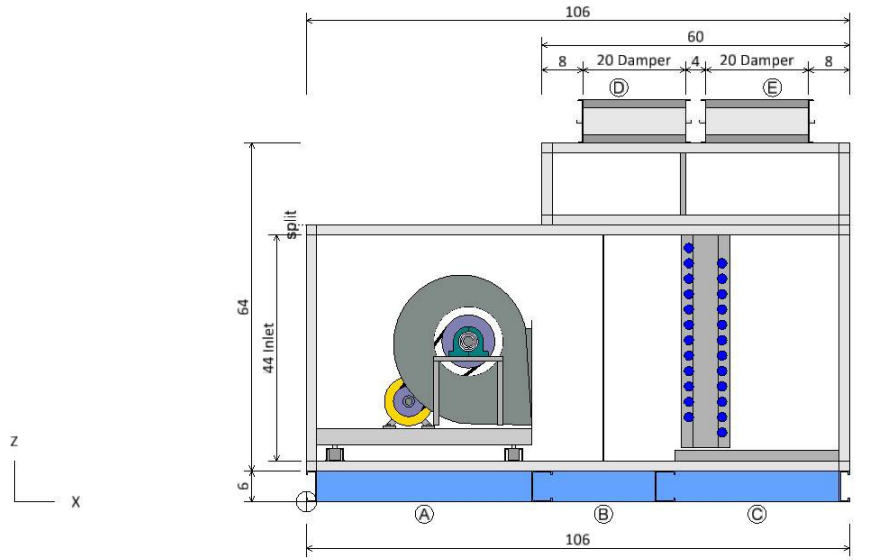

ELEVATION VIEW

Component Key

	Type	X	Y	Z	Wid	Hgt
Ⓐ	Supply Fan Opening	0.00	2.00	8.00	72.00	44.00
Ⓓ	Hot Water Coil MZ hot deck output	54.00	2.00	70.00	64.00	20.00

Note: Dimensions are measured from the origin point.
Note: Openings with or without dampers are recessed into the unit by approximately 1.75 in.

Opening/Damper Connections	Unit Tag: AHU-5 (Klenk)			Sales Office: HTS Texas		
Product: Vision Air Handler	Project Name: Klein ISD Klenk ES AHU replacements			Sales Engineer:		
Model: CAH018GMAM	Jan. 17, 2026	Ver/Rev:	Sheet: 1 of 1	Scale: NTS	Tolerance: +/-0.25"	Dwg Units: in

DAIKIN
13600 Industrial Park Blvd, Minneapolis, MN 55441
www.DaikinApplied.com Software Version: 13.91

All opening dimensions have a 1" mounting flange along the inner edge. The actual airflow area of the opening is 2" smaller in each dimension.

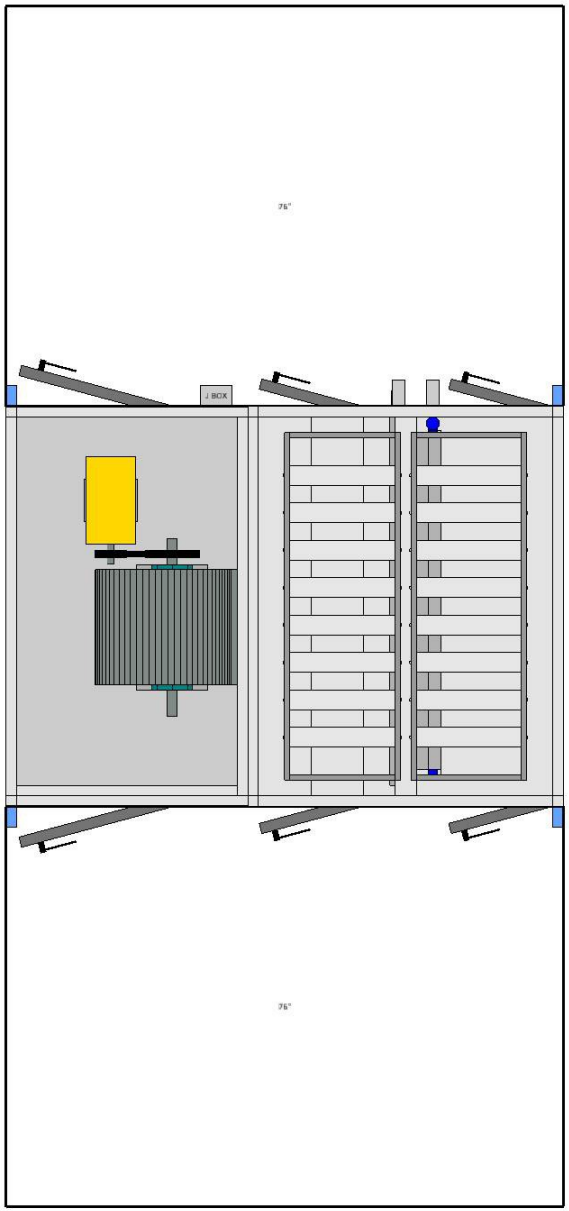

PLAN VIEW

Notes
Check local electrical component service clearance codes for specific distances. Access is only required on one side of the unit.

Service Clearance View	Unit Tag: AHU-5 (Klenk)			Sales Office: HTS Texas		
Product: Vision Air Handler	Project Name: Klein ISD Klenk ES AHU replacements			Sales Engineer:		
Model: CAH018GMAM	Jan. 17, 2026	Ver/Rev:	Sheet: 1 of 1	Scale: NTS	Tolerance: +/-0.25"	Dwg Units: in

DAIKIN
13600 Industrial Park Blvd, Minneapolis, MN 55441
www.DaikinApplied.com Software Version: 13.91

All opening dimensions have a 1" mounting flange along the inner edge. The actual airflow area of the opening is 2" smaller in each dimension.

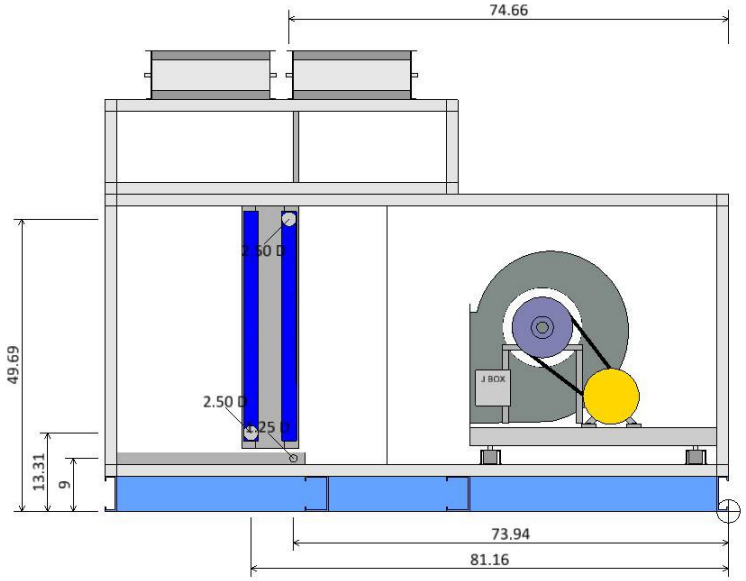

LEFT ELEVATION VIEW

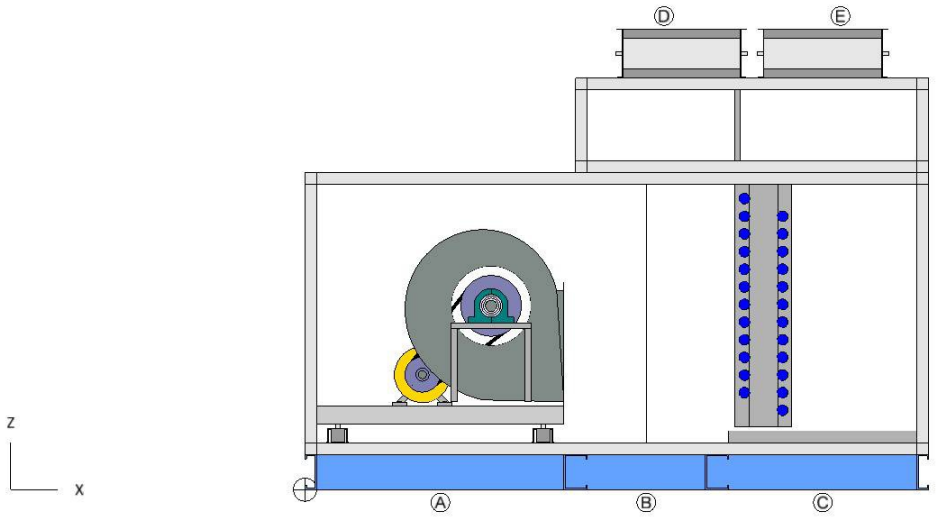

RIGHT ELEVATION VIEW

Coil and Drain Connections					
	Type	X	Y	Z	Diam
Ⓒ	Chilled Water coil Condensate drain conn:	73.94	78.90	9.00	1.25
	Cold water inlet:	81.16	83.00*	13.31	2.50
	Cold water outlet:	74.66	83.00*	49.69	2.50

Notes:
Dimensions are measured from the origin point.
* value varies +/- 1 in.

Coil and Drain Connections	Unit Tag: AHU-5 (Klenk)			Sales Office: HTS Texas		
Product: Vision Air Handler	Project Name: Klein ISD Klenk ES AHU replacements			Sales Engineer:		
Model: CAH018GMAM	Jan. 17, 2026	Ver/Rev:	Sheet: 1 of 1	Scale: NTS	Tolerance: +/-0.25"	Dwg Units: in

DAIKIN
13600 Industrial Park Blvd, Minneapolis, MN 55441
www.DaikinApplied.com Software Version: 13.91

All opening dimensions have a 1" mounting flange along the inner edge. The actual airflow area of the opening is 2" smaller in each dimension.

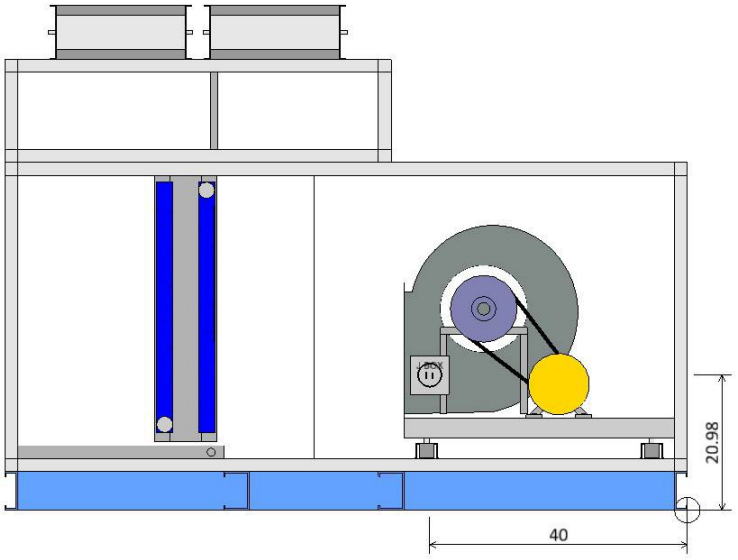

LEFT ELEVATION VIEW

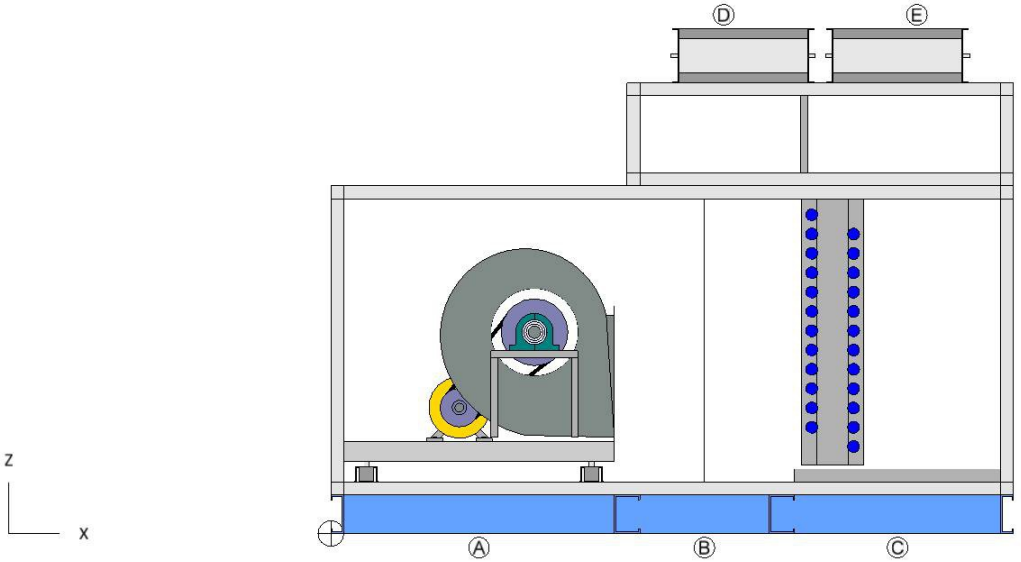

RIGHT ELEVATION VIEW

Component Key

	Type	X	Y	Z	Volts	Phase
Ⓐ	Supply Fan Fan	40.00	76.00	20.98	460	3

Note: Dimensions are measured from the origin point.

Electrical Connections	Unit Tag: AHU-5 (Klenk)			Sales Office: HTS Texas		
Product: Vision Air Handler	Project Name: Klein ISD Klenk ES AHU replacements			Sales Engineer:		
Model: CAH018GMAM	Jan. 17, 2026	Ver/Rev:	Sheet: 1 of 1	Scale: NTS	Tolerance: +/-0.25"	Dwg Units: in

DAIKIN
13600 Industrial Park Blvd, Minneapolis, MN 55441
www.DaikinApplied.com Software Version: 13.91

All opening dimensions have a 1" mounting flange along the inner edge. The actual airflow area of the opening is 2" smaller in each dimension.

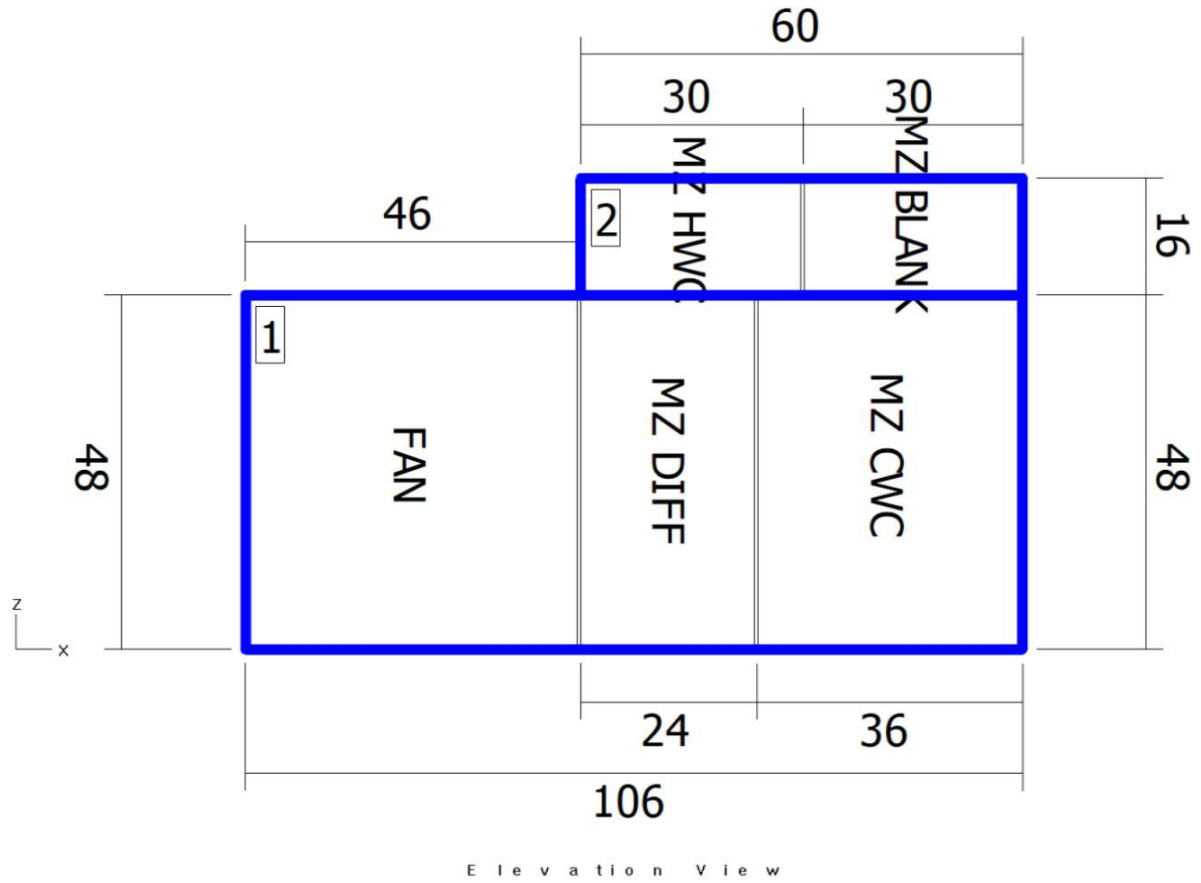

Elevation View

Shipping Sections

Section	Weight (lb)	X	Y	Z
Section 1	2350.54	106	76	48
Section 2	343.70	60	76	16
Total Unit	2694.24	106	76	64

Note: Base rails, curb ready base, coil connectors, drain connectors, and control boxes not included in height X, Y, Z dimensions.
Shipping section may be 2" longer in air flow direction due to internal splice joint.
Vertical multizone section : Add 8.38" to section height if dampers are installed.

Shipping Sections	Unit Tag: AHU-5 (Klenk)			Sales Office: HTS Texas		
Product: Vision Air Handler	Project Name: Klein ISD Klenk ES AHU replacements			Sales Engineer:		
Model: CAH018GMAM	Jan. 17, 2026	Ver/Rev:	Sheet: 1 of 1	Scale: NTS	Tolerance: +/-0.25"	Dwg Units: in

DAIKIN
13600 Industrial Park Blvd, Minneapolis, MN 55441
www.DaikinApplied.com Software Version: 13.91

All opening dimensions have a 1" mounting flange along the inner edge. The actual airflow area of the opening is 2" smaller in each dimension.

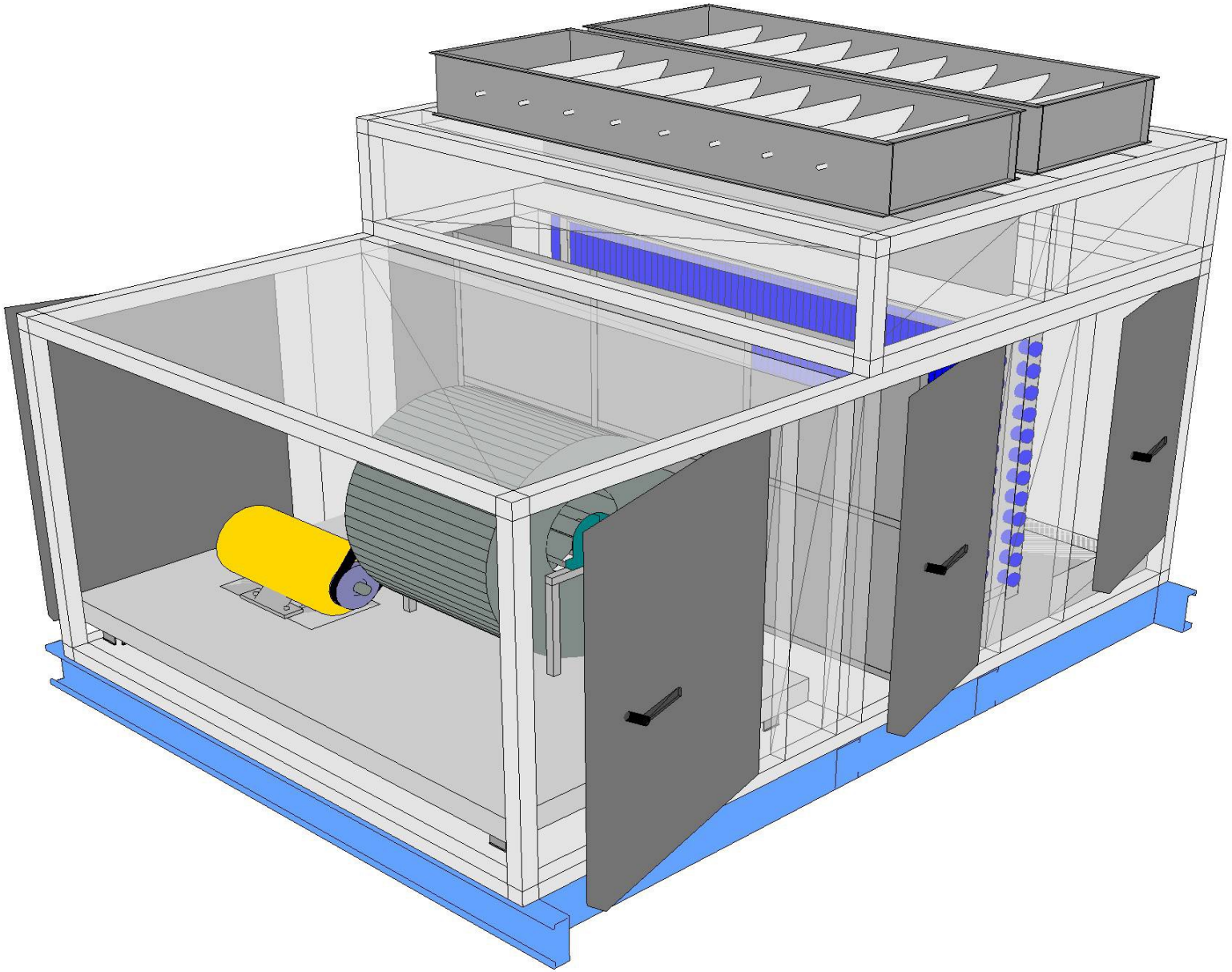

Product Drawing	Unit Tag: AHU-5 (Klenk)			Sales Office: HTS Texas			DAIKIN
Product: Vision Air Handler	Project Name: Klein ISD Klenk ES AHU replacements			Sales Engineer:			13600 Industrial Park Blvd, Minneapolis, MN 55441
Model: CAH018GMAM	Jan. 17, 2026	Ver/Rev:	Sheet: 1 of 1	Scale: NTS	Tolerance: +/-0.25"	Dwg Units: in	www.DaikinApplied.com Software Version: 13.91

All opening dimensions have a 1" mounting flange along the inner edge. The actual airflow area of the opening is 2" smaller in each dimension.

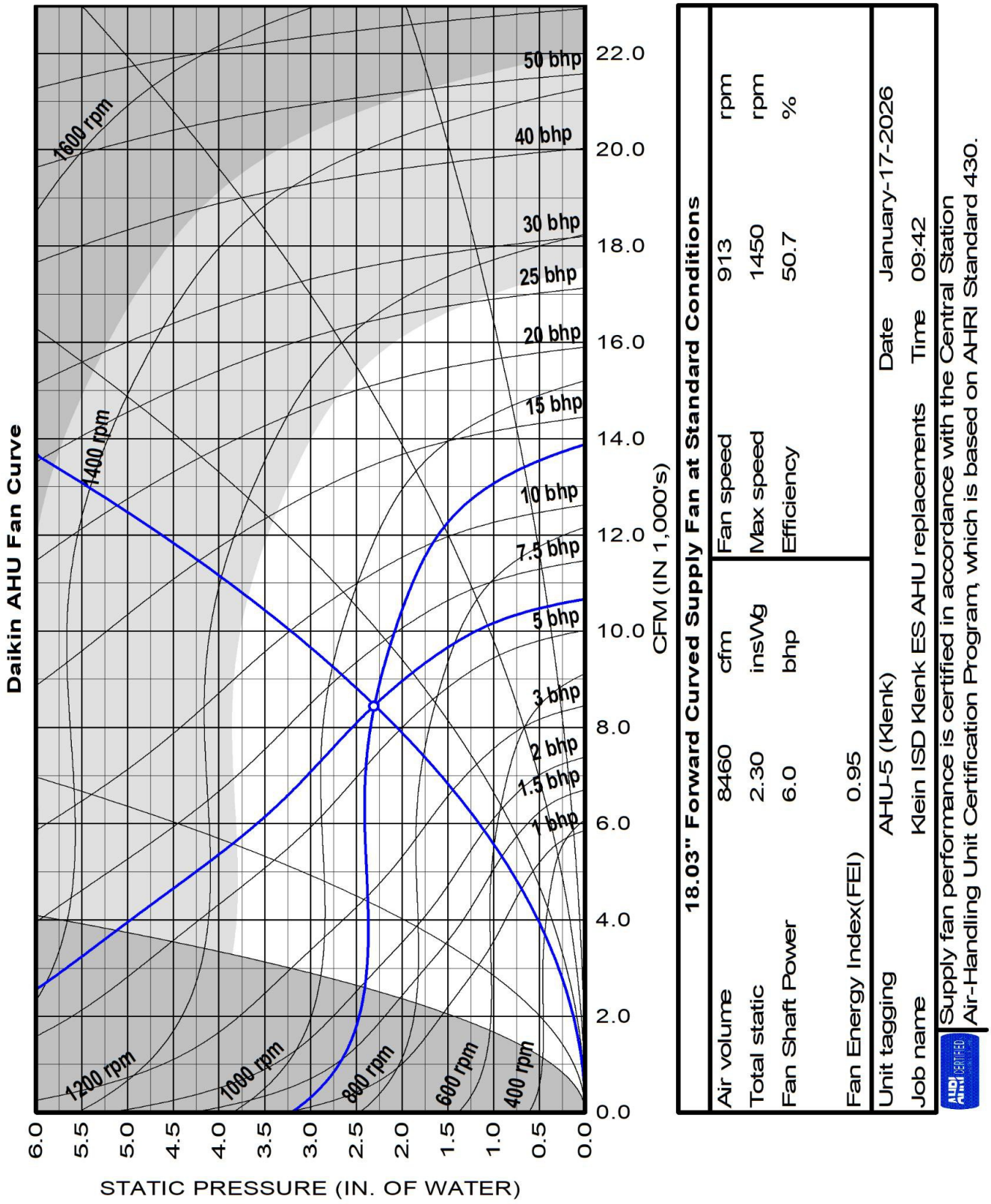

18.03" Forward Curved Supply Fan at Standard Conditions

Air volume	8460	cfm	Fan speed	913	rpm
Total static	2.30	insWg	Max speed	1450	rpm
Fan Shaft Power	6.0	bhp	Efficiency	50.7	%
Fan Energy Index(FEI)	0.95				
Unit tagging	AHU-5 (Klenk)		Date	January-17-2026	
Job name	Klein ISD Klenk ES AHU replacements		Time	09:42	

Supply fan performance is certified in accordance with the Central Station Air-Handling Unit Certification Program, which is based on AHRI Standard 430.

Job Information	Technical Data Sheet
Job Name	Klein ISD Klenk ES AHU replacements
Date	January 17 2026
Submitted By	Salas O'Brien
Software Version	13.82
Unit Tag	AHU-5 Filter

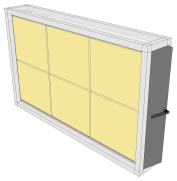

Unit Overview

Model Number	Supply					
	Air Volume cfm	Static Pressure		External Dimensions		
		External inWc	Total inWc	Height in	Width in	Length in
CAC017GVAM	8460	0.75	0.00	46*	76*	12

**Not including base rails, coil connectors, drain connectors and control boxes.*

Unit

Model Number:	CAC017GVAM		
Approval:	ETL Listed / ETL Listed to Canadian Safety Standards (ETL Label / ETLc Label)		
Outer Panel:	18 gauge G90 Galvanized Steel (unpainted)		
Liner:	24 gauge Galvanized Steel (unless noted per section)		
Insulation:	R-13 Injected Foam		
Unit Configuration:	Inline horizontal	**Drive (Handling) Location:**	Right
Base:	None	**Wall Thickness:**	2 in
Altitude:	0 ft	**Parts Warranty:**	Additional One Year, Two Year Total

Panel Filter

Component: 1 | Length: 12 in | Shipping Section: 1

Type	Efficiency	Nominal Face Velocity	Actual Face Velocity	Actual Face Area	Air Volume	Filter Loading
Pre Pleat	MERV 13	423 ft/min	448 ft/min	18.9 ft²	8460 cfm	Side

Air Pressure Drop				Number of Filters	Height	Width	Depth
Clean Air	Mean Air	Dirty Air	User Spec				
0.30 inWc	**0.65** inWc	1.00 inWc	N/A	6	20 in	24 in	2 in

Door

Location	Drive Side Door Width	Opp. Drv. Side Door Width	Opening
Both sides	8 in	8 in	Outward

Unit Sound Power (dB)

Type	63 Hz	125 Hz	250 Hz	500 Hz	1000 Hz	2000 Hz	4000 Hz	8000 Hz
Radiated:	64	54	48	41	39	41	46	51
Unit Discharge:	64	54	48	41	39	41	46	51
Unit Return:	64	54	48	41	39	41	46	51

Shipping Section Details

Section	Length in	Weight lb	Corner Weights (lb)				Center of Gravity (in)		
			P1	P2	P3	P4	XX	YY	ZZ
1	12	181	45	45	45	45	6	38	23
Entire Unit	**12**	**181**	**45**	**45**	**45**	**45**	**6**	**38**	**23**

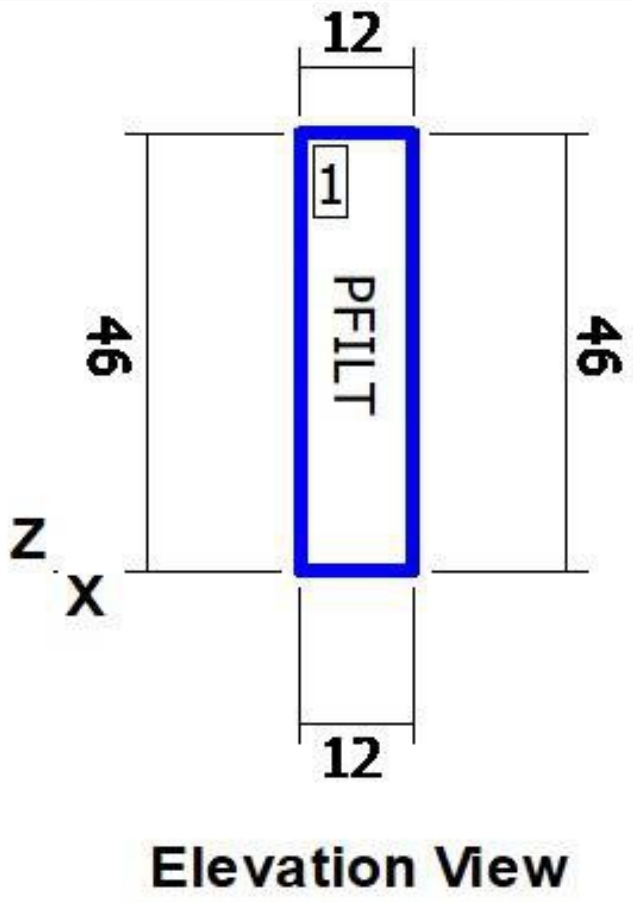

Elevation View

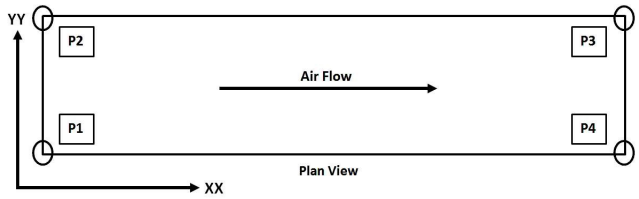

NOTE: Special components aren't included in the corner weights and center of gravity data.

Shipping Protection

None

Supply Static Pressure Drop

Component	Option	Static Pressure Drop
Panel Filter	Panel Filter	0.65 insWg
External Static	External Static	0.75 insWg
Total Supply Fan Static		

AHRI Certification

The air-handler is selected outside of the scope of AHRI Standard 430/431

Notes

Standard

1. As a standalone component, unit meets or exceeds requirements of ASHRAE 90.1 - 2007. The approving authority is responsible for compliance of multi - component building systems.

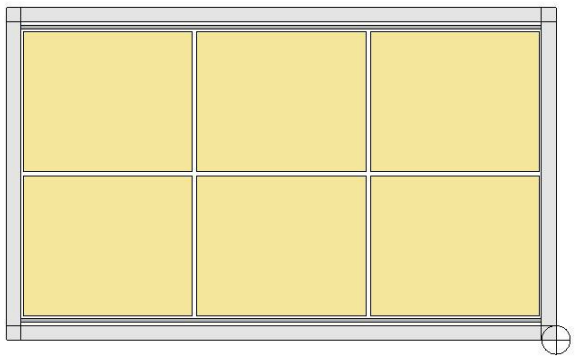

FRONT END VIEW

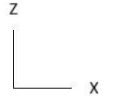

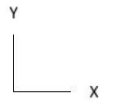

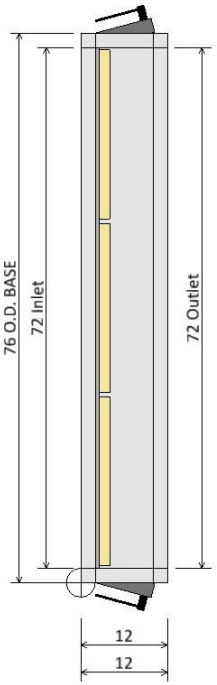

PLAN VIEW

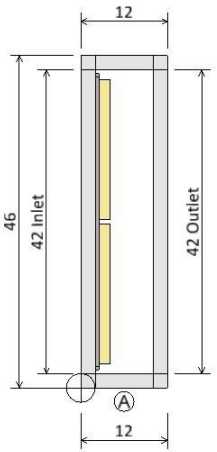

ELEVATION VIEW

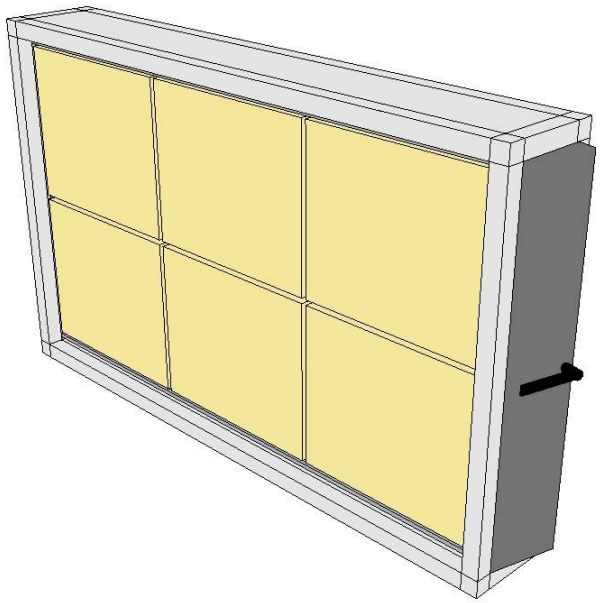

ISOMETRIC VIEW

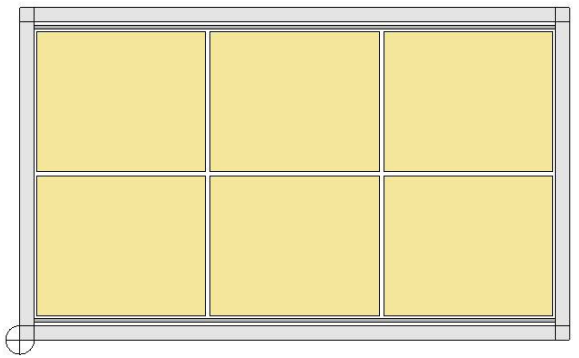

REAR END VIEW

Plan/Elevation	Unit Tag: AHU-5 Filter			Sales Office: HTS Texas		
Product: Vision Air Handler	Project Name: Klein ISD Klenk ES AHU replacements			Sales Engineer:		
Model: CAC017GVAM	Jan. 17, 2026	Ver/Rev:	Sheet: 1 of 1	Scale: NTS	Tolerance: +/-0.25"	Dwg Units: in

DAIKIN
13600 Industrial Park Blvd, Minneapolis, MN 55441
www.DaikinApplied.com Software Version: 13.82

All opening dimensions have a 1" mounting flange along the inner edge. The actual airflow area of the opening is 2" smaller in each dimension.

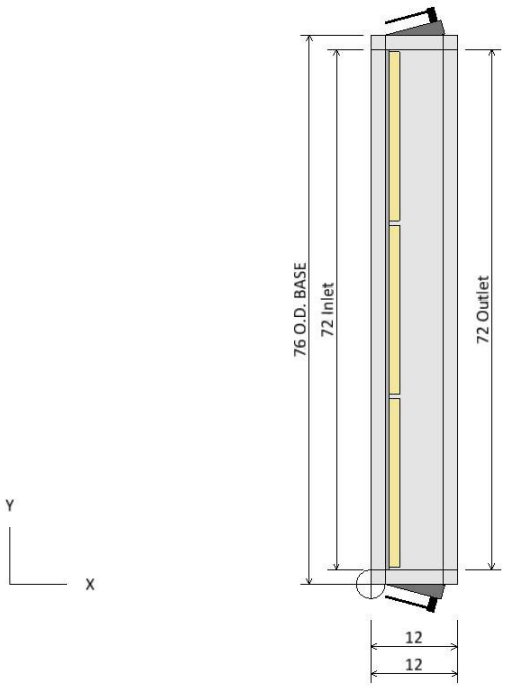

PLAN VIEW

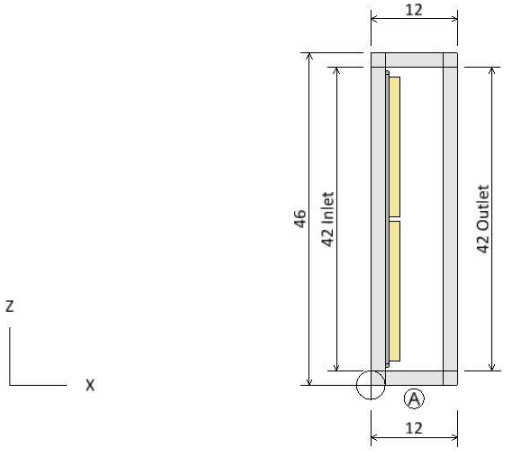

ELEVATION VIEW

Component Key	
Ⓐ	Panel Filter Filter Type: PrePleat (MERV 13) Right Door (WxH): 8 ins x 42 ins Left Door (WxH): 8 ins x 42 ins

Plan/Elevation - No Ends	Unit Tag: AHU-5 Filter			Sales Office: HTS Texas		
Product: Vision Air Handler	Project Name: Klein ISD Klenk ES AHU replacements			Sales Engineer:		
Model: CAC017GVAM	Jan. 17, 2026	Ver/Rev:	Sheet: 1 of 1	Scale: NTS	Tolerance: +/-0.25"	Dwg Units: in

DAIKIN
13600 Industrial Park Blvd, Minneapolis, MN 55441
www.DaikinApplied.com Software Version: 13.82

All opening dimensions have a 1" mounting flange along the inner edge. The actual airflow area of the opening is 2" smaller in each dimension.

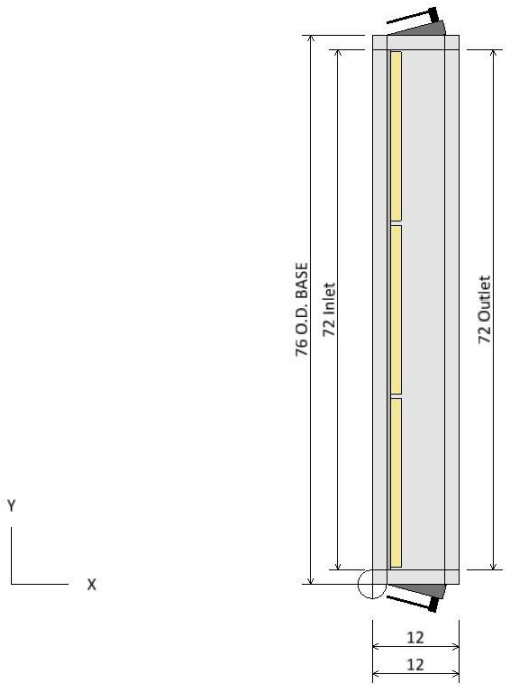

PLAN VIEW

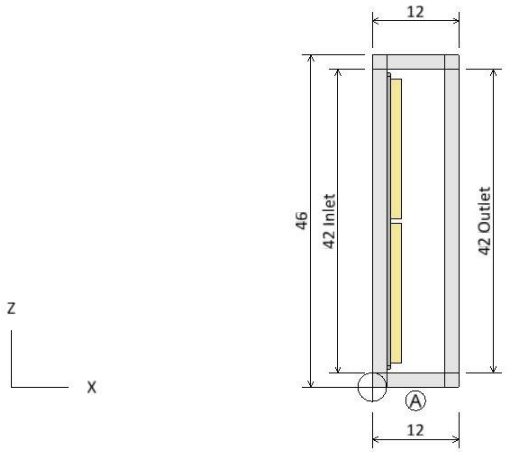

ELEVATION VIEW

Component Key

	Type	X	Y	Z	Wid	Hgt
Ⓐ	Panel Filter Opening	0.00	2.00	2.00	72.00	42.00
	Opening	12.00	2.00	2.00	72.00	42.00

Note: Dimensions are measured from the origin point.
Note: Openings with or without dampers are recessed int the unit by approximately 1.75 in.

Opening/Damper Connections	Unit Tag: AHU-5 Filter			Sales Office: HTS Texas		
Product: Vision Air Handler	Project Name: Klein ISD Klenk ES AHU replacements			Sales Engineer:		
Model: CAC017GVAM	Jan. 17, 2026	Ver/Rev:	Sheet: 1 of 1	Scale: NTS	Tolerance: +/-0.25"	Dwg Units: in

DAIKIN
13600 Industrial Park Blvd, Minneapolis, MN 55441
www.DaikinApplied.com Software Version: 13.82

All opening dimensions have a 1" mounting flange along the inner edge. The actual airflow area of the opening is 2" smaller in each dimension.

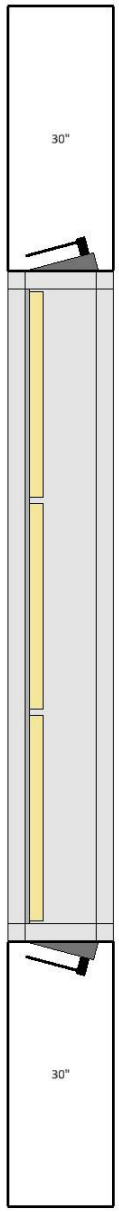

PLAN VIEW

Notes
Check local electrical component service clearance codes for specific distances. Access is only required on one side of the unit.

Service Clearance View	Unit Tag: AHU-5 Filter			Sales Office: HTS Texas			DAIKIN
Product: Vision Air Handler	Project Name: Klein ISD Klenk ES AHU replacements			Sales Engineer:			13600 Industrial Park Blvd, Minneapolis, MN 55441
Model: CAC017GVAM	Jan. 17, 2026	Ver/Rev:	Sheet: 1 of 1	Scale: NTS	Tolerance: +/-0.25"	Dwg Units: in	www.DaikinApplied.com Software Version: 13.82

All opening dimensions have a 1" mounting flange along the inner edge. The actual airflow area of the opening is 2" smaller in each dimension.

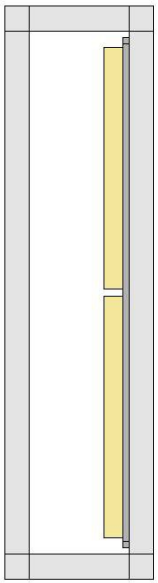

LEFT ELEVATION VIEW

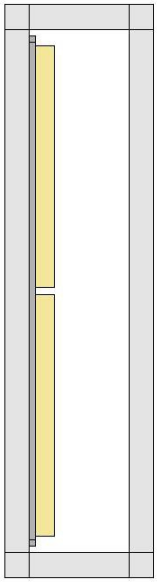

RIGHT ELEVATION VIEW

Coil and Drain Connections

Note: Dimensions are measured from the origin point.

Coil and Drain Connections	Unit Tag: AHU-5 Filter			Sales Office: HTS Texas		
Product: Vision Air Handler	Project Name: Klein ISD Klenk ES AHU replacements			Sales Engineer:		
Model: CAC017GVAM	Jan. 17, 2026	Ver/Rev:	Sheet: 1 of 1	Scale: NTS	Tolerance: +/-0.25"	Dwg Units: in

DAIKIN
13600 Industrial Park Blvd, Minneapolis, MN 55441
www.DaikinApplied.com Software Version: 13.82

All opening dimensions have a 1" mounting flange along the inner edge. The actual airflow area of the opening is 2" smaller in each dimension.

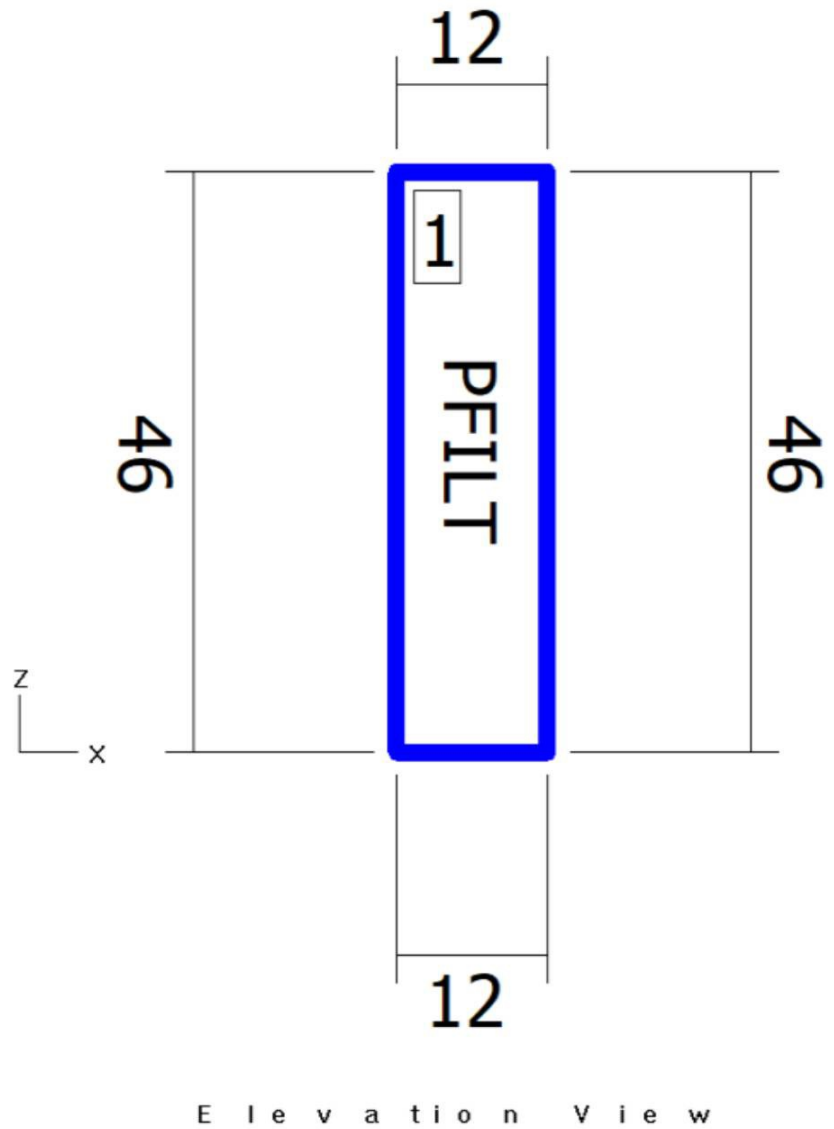

Elevation View

Shipping Sections

Section	Weight (lb)	X	Y	Z
Section 1	181.46	12	76	46
Total Unit	181.46	12	76	46

Note: Base rails, curb ready base, coil connectors, drain connectors, and control boxes not included in height X, Y, Z dimensions.
Shipping section may be 2" longer in air flow direction due to internal splice joint.

Shipping Sections	Unit Tag: AHU-5 Filter			Sales Office: HTS Texas		
Product: Vision Air Handler	Project Name: Klein ISD Klenk ES AHU replacements			Sales Engineer:		
Model: CAC017GVAM	Jan. 17, 2026	Ver/Rev:	Sheet: 1 of 1	Scale: NTS	Tolerance: +/-0.25"	Dwg Units: in

DAIKIN
13600 Industrial Park Blvd, Minneapolis, MN 55441
www.DaikinApplied.com Software Version: 13.82

All opening dimensions have a 1" mounting flange along the inner edge. The actual airflow area of the opening is 2" smaller in each dimension.

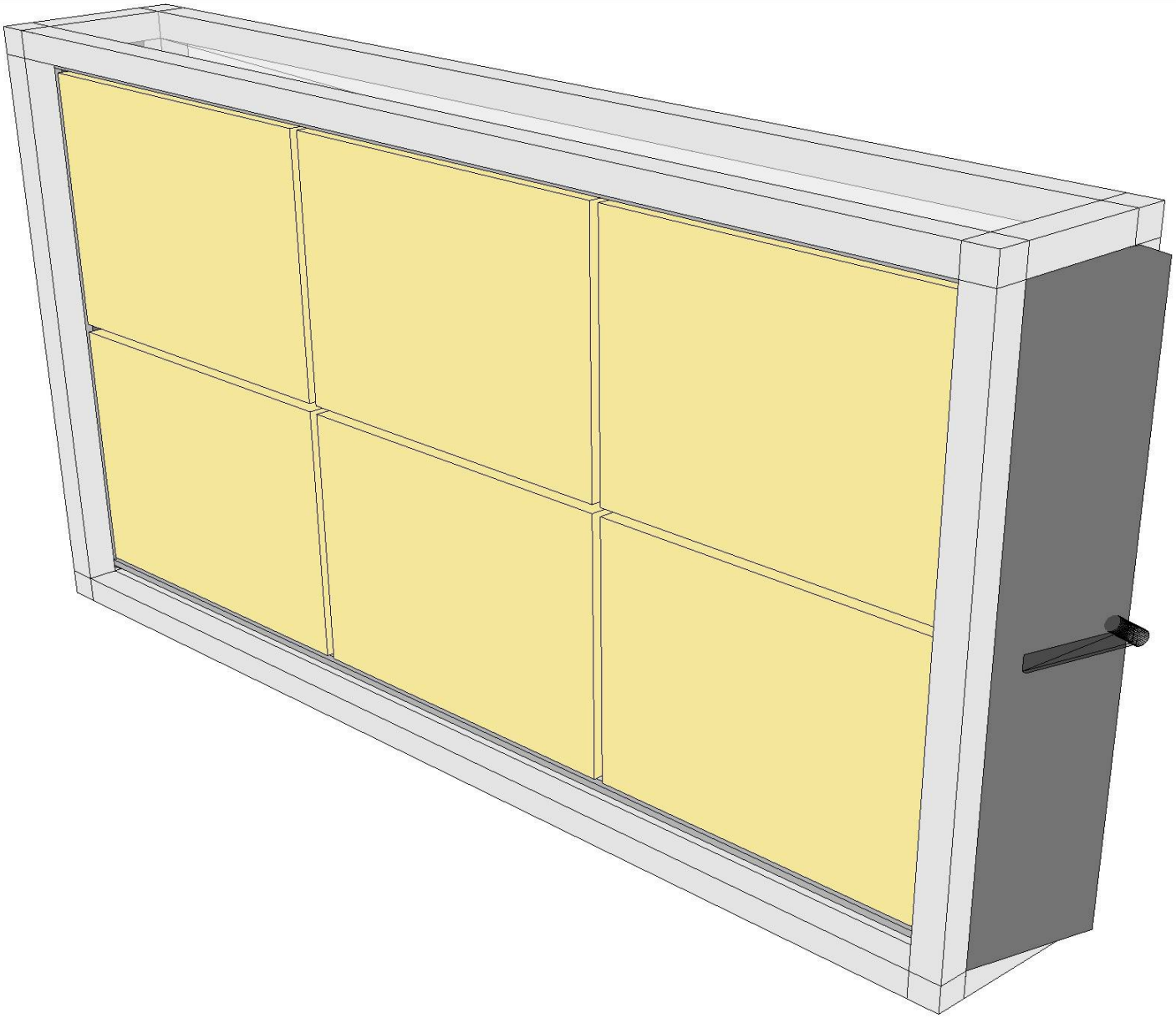

Product Drawing	Unit Tag: AHU-5 Filter			Sales Office: HTS Texas			DAIKIN
Product: Vision Air Handler	Project Name: Klein ISD Klenk ES AHU replacements			Sales Engineer:			13600 Industrial Park Blvd, Minneapolis, MN 55441
Model: CAC017GVAM	Jan. 17, 2026	Ver/Rev:	Sheet: 1 of 1	Scale: NTS	Tolerance: +/-0.25"	Dwg Units: in	www.DaikinApplied.com Software Version: 13.82

All opening dimensions have a 1" mounting flange along the inner edge. The actual airflow area of the opening is 2" smaller in each dimension.

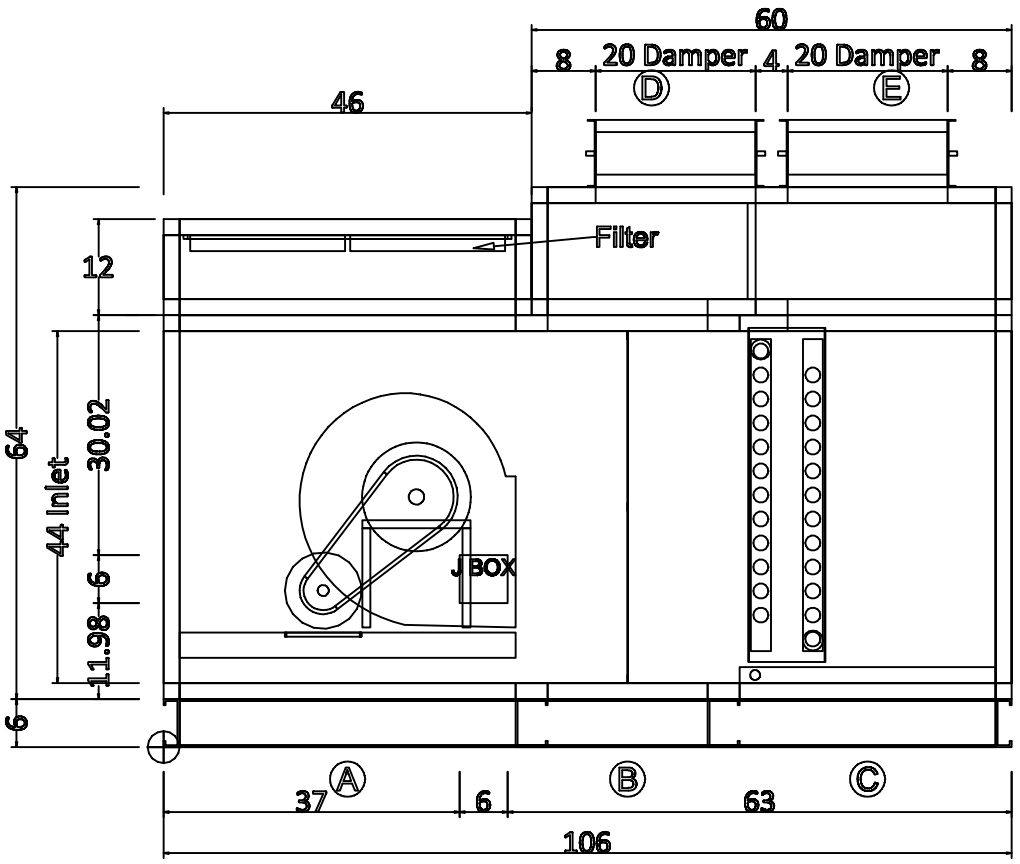

ELEVATION VIEW

Plan/Elevation - No Ends	Unit Tag: AHU-5 (Klenk) Top Filter			Sales Office: HTS Texas			DAIKIN
Product: Vision Air Handler	Project Name: Klein ISD Klenk ES AHU replacements			Sales Engineer:			13600 Industrial Park Blvd, Minneapolis, MN 55441
Model: CAH018GMAM	Dec. 3, 2025	Ver/Rev:	Sheet: 1 of 1	Scale: NTS	Tolerance: +/-0.25"	Dwg Units: in	www.DaikinApplied.com Software Version: 13.82

All opening dimensions have a 1" mounting flange along the inner edge. The actual airflow area of the opening is 2" smaller in each dimension.

Job Information	Technical Data Sheet
Job Name	Klein ISD Klenk ES AHU replacements
Date	January 17 2026
Submitted By	Salas O'Brien
Software Version	13.91
Unit Tag	AHU-6 (Klenk)

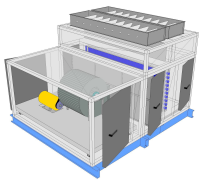

Unit Overview

Model Number	Supply					
	Air Volume cfm	Static Pressure		External Dimensions		
		External inWc	Total inWc	Height in	Width in	Length in
CAH018GMAM	8280	0.75	2.28	44*	86*	104

**Not including base rails, coil connectors, drain connectors and control boxes.*

Unit

Model Number:	CAH018GMAM		
Approval:	ETL Listed / ETL Listed to Canadian Safety Standards (ETL Label / ETLc Label)		
Outer Panel:	18 gauge G90 Galvanized Steel (unpainted)		
Liner:	24 gauge Galvanized Steel (unless noted per section)		
Insulation:	R-13 Injected Foam		
Sound Baffles:	Included in Fan, Plenum, Access and Manual section (unless noted per section)		
Unit Configuration:	Multizone	**Drive (Handling) Location:**	Left
Base:	6" formed channel	**Wall Thickness:**	2 in
Altitude:	0 ft	**Parts Warranty:**	Additional One Year, Two Year Total

Supply Fan	Component: 1	Length: 46 in	Shipping Section: 1

Fan Performance

Air Volume	Static Pressure			Fan Energy Index(FEI)	Total Input Power	Fan Shaft Power	Fan Wheel Speed		Outlet Velocity
	External	Total	Cabinet				Operating	Maximum	
8280 cfm	0.75 inWc	2.28 inWc	0.65 inWc	0.96	5.4 kW	5.81 BHP	907 rpm	1450 rpm	2865 ft/min

Fan Data

Fan Type	Blade Type / Class	Quantity of Fans	Wheel Diameter	Number of Blades	Discharge	Motor Location
Centrifugal DWDI	Forward Curved / 2	1	18.03 in	N/A	Bottom horizontal	To Side of Fan

Motor Data

Power	Electrical Supply	Speed	Efficiency	Enclosure	Frame Size	Supplier	Number of Poles	Lock Rotor Current	Full Load Current
10.0 HP	460/60/3 V/Hz/Phase	1750 rpm	Premium	TEFC	215 T frame	Generic	4	106.62 A	12.50 A

Fan Options

Shaft Grounding Kit:	Provided	Isolator Type:	Spring

Drive Package Data*

Fan Sheave	Motor Sheave	Belt	Number of Belts	Actual Drive S.F.	Bearing Type
2B5V90	2BK52H	BX51	2	1.37	Standard - L50 (200K)

**Daikin Applied reserves the right to provide a different but equivalent drive package*

VFD/Starter/Disconnect Data

Selection Type:	External J-Box	Vendor:	Factory Standard
Voltage:	460 V	Height x Width x Depth:	6.00 in x 6.00 in x 4.00 in
Mounting:	Door Side	Enclosure:	NEMA 1

Door

Location	Drive Side Door Width	Opp. Drv. Side Door Width	Opening
Both sides	30 in	30 in	Outward

Special Options

Sound Baffle	Static Pressure
Sound baffle included	0.65 inWc

Two Deck Multizone	Component: 2	Length: 58 in	Shipping Section: 2 & 3

Discharge Location	Number of Zones	Multizone APD*	Damper Type	Actuation
Vertical / Vertical	9	0.88 inWc	Low leak / Low leak	None - damper mechanically linked

Note : includes coil & balance plate & diffuser

Note : Cabinet height for multizone extends 16 inches above 'External cabinet height' referenced above.
The damper assembly will add 8.38 inches to the cabinet length for horizontal discharge and 8.38 inches to the height for vertical discharge.

Cold Deck Coil

Coil Model	Total Capacity	Sensible Capacity	Number of Coils	Number of Rows	Fins per Inch	Tube Diameter	Tube Spacing (Face x Row)
5WL0806B	265791 Btu/hr	203578 Btu/hr	1	6	8	0.625 in	1.50 in X 1.299 in

Coil Operating Weight	Coil Dry Weight
410 lb	295 lb

Air Volume	Air Temperature				Coil Air Pressure Drop	Finned Height	Finned Length	Face Area	Face Velocity
	Entering		Leaving						
	Dry Bulb	Wet Bulb	Dry Bulb	Wet Bulb					
8280 cfm	77.2 °F	64.4 °F	54.7 °F	53.6 °F	0.63 inWc	33 in	73 in	16.73 ft²	495 ft/min

Water

Entering	Leaving	Flow Rate	Pressure Drop	Velocity	Fluid Volume	Fluid Weight
45.0 °F	53.7 °F	60.80 gpm	10.50 ftHd	4.00 ft/s	13.0 gal	115.00 lb

Connection [Data Per Coil]				Min. Fin Surface Temp.	Min. Tube Wall Surface Temp.	Fouling Factor
Type	Size	Location	Material			
Threaded	2.50 in	Drive side	Carbon steel	45.0 °F	45.0 °F	0.000

Material				Drain Pan	Drain Side	Electro-Fin Coat	Moisture Eliminator
Fin	Tube	Header	Case				
Aluminum .0075 in	Copper .020 in	Copper	Stainless steel	Stainless steel	Drive side	NA	NA

AHRI 410 Certification

Certified in accordance with the AHRI Forced-Circulation Air-Cooling and Air-Heating Coils Certification Program which is based on AHRI Standard 410 within the Range of Standard Rating Conditions listed in Table 1 of the Standard. Certified units may be found in the AHRI Directory at www.ahridirectory.org

Future Hot Deck Coil(58 ins)

Number of Coils	Number of Rows
1	1

Coil Air Pressure Drop	Finned Height	Finned Width	Face Area	Face Velocity
NA inWc	18 in	70 in	8.75 ft²	946 ft/min

Connection Location	Connection Material
Drive side	Carbon steel

Coil Model	Drain Pan	Drain Pan Side
Future Coil (Not Supplied)	NA	NA

AHRI 410 Certification

Coil is NOT certified by AHRI

Door

Location	Drive Side Door Width	Opp. Drv. Side Door Width	Opening
Both sides	20 in	20 in	Outward

Unit Sound Power (dB)

Type	63 Hz	125 Hz	250 Hz	500 Hz	1000 Hz	2000 Hz	4000 Hz	8000 Hz
Radiated:	73	73	63	60	59	49	46	51
Unit Discharge:	83	83	81	81	81	77	74	69
Unit Return:	80	80	78	78	78	74	71	66

Shipping Section Details

Section	Length in	Weight lb	Corner Weights (lb)				Center of Gravity (in)		
			P1	P2	P3	P4	XX	YY	ZZ
1	46	1296	377	295	291	374	23	38	21
2	58	1246	269	283	354	340	32	44	22
3	58	379	283	300	112	96	15	45	14
Entire Unit	**104**	**2921**	**864**	**813**	**823**	**875**	**52**	**42**	**30**

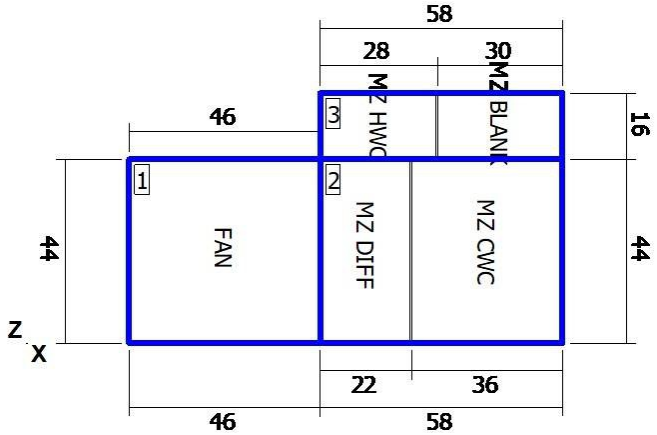

Elevation View

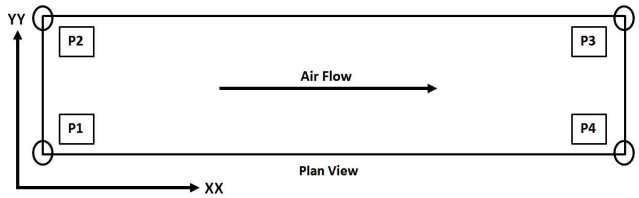

NOTE: Special components aren't included in the corner weights and center of gravity data.

Shipping Protection

None

Supply Static Pressure Drop

Component	Option	Static Pressure Drop
Supply Fan	Cabinet	
Supply Fan	Special	0.65 insWg
Multizone	Multizone	0.88 insWg
External Static	External Static	0.75 insWg
Total Supply Fan Static		2.28 insWg

Minimum Recommended Drain Pan Trap Dimensions

Shipping Section	Component	H
2	Chilled Water coil	1.20

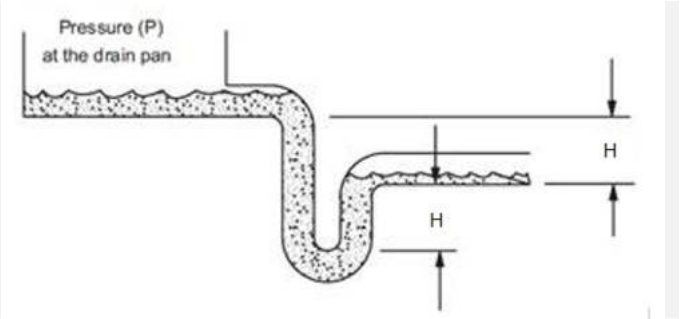

Dimensions provided as a courtesy and are recommended minimums only. Daikin is not responsible for supplying or designing drain pan traps and is not responsible for any damage caused by incorrect trap heights. The dimensions listed above should be reviewed and approved by a licensed plumbing professional.

This calculation is based on an assumption that 0.25 inches of the external static pressure is in the return duct and the remainder is in the supply duct. If actual conditions vary from this assumption then contact Applications for new trap height recommendations.

AHRI Certification



Certified by the AHRI Central Station Air-Handling Unit (AHU) Certification Program, which is based on AHRI Standard 430/431. AHRI certified units are subject to rigorous and continuous testing, have performance ratings independently measured and are third-party verified. Certified units may be found in the AHRI Directory at www.ahridirectory.org.

Notes

Standard
1. As a standalone component, unit meets or exceeds requirements of ASHRAE 90.1 - 2007. The approving authority is responsible for compliance of multi - component building systems.

51MN4W

Klein ISD Klenk ES AHU rep

83

1/17/2026

AHU-6 (Klenk)

Drawing

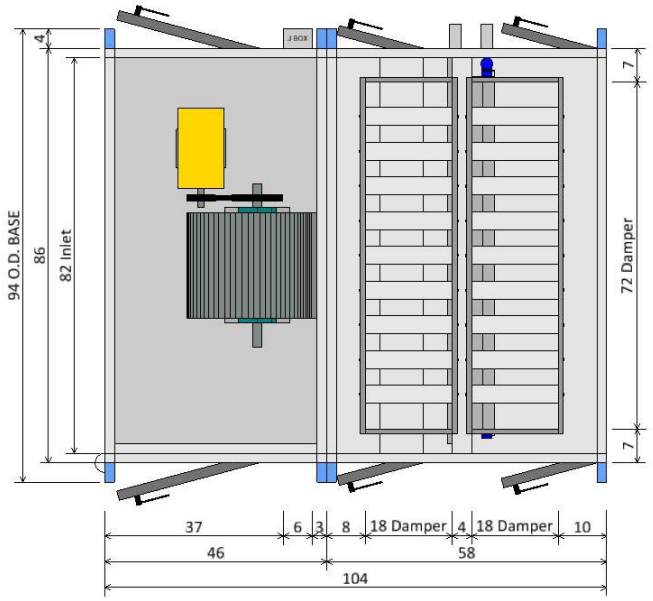

PLAN VIEW

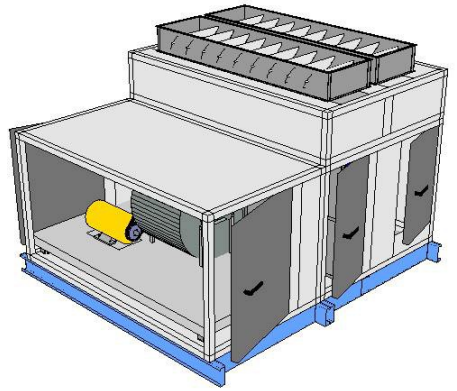

ISOMETRIC VIEW

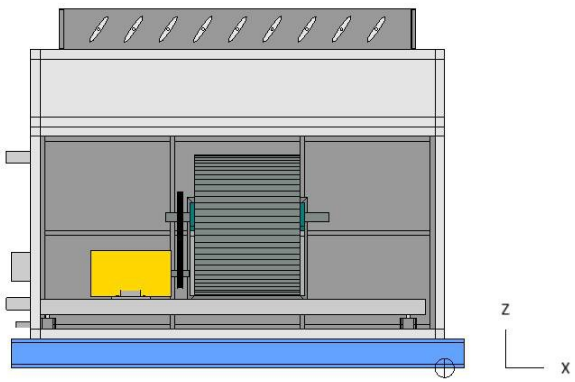

FRONT END VIEW

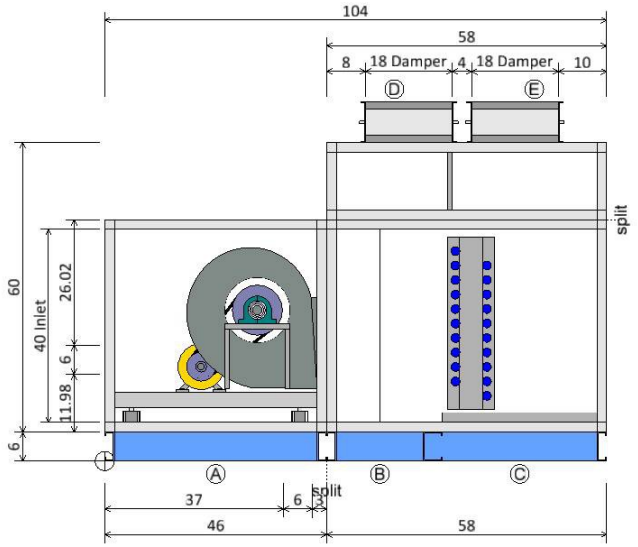

ELEVATION VIEW

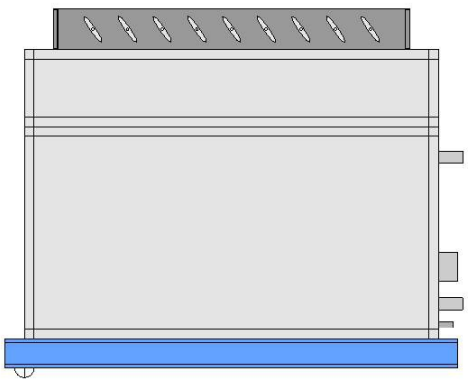

REAR END VIEW

Plan/Elevation	Unit Tag: AHU-6 (Klenk)			Sales Office: HTS Texas		
Product: Vision Air Handler	Project Name: Klein ISD Klenk ES AHU replacements			Sales Engineer:		
Model: CAH018GMAM	Jan. 17, 2026	Ver/Rev:	Sheet: 1 of 1	Scale: NTS	Tolerance: +/-0.25"	Dwg Units: in

DAIKIN

13600 Industrial Park Blvd, Minneapolis, MN 55441

www.DaikinApplied.com Software Version: 13.91

All opening dimensions have a 1" mounting flange along the inner edge. The actual airflow area of the opening is 2" smaller in each dimension.

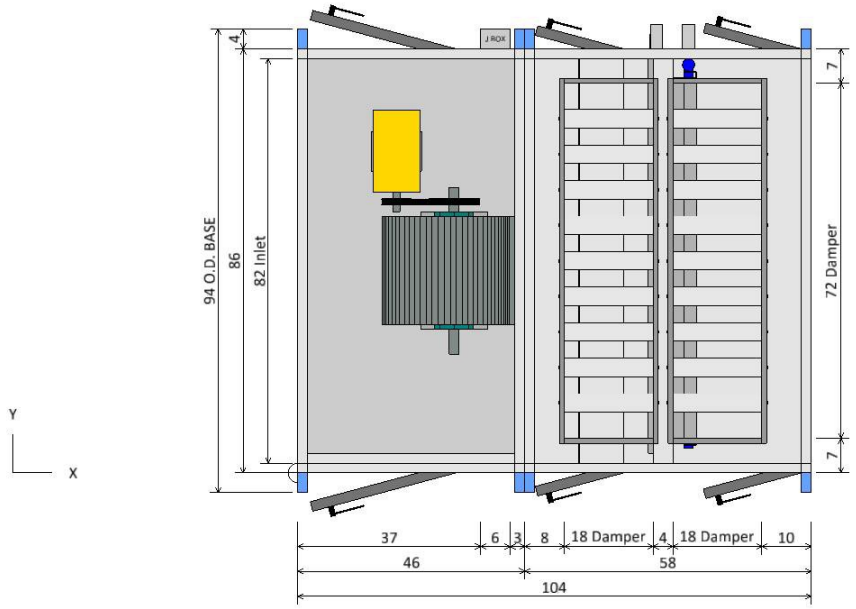

PLAN VIEW

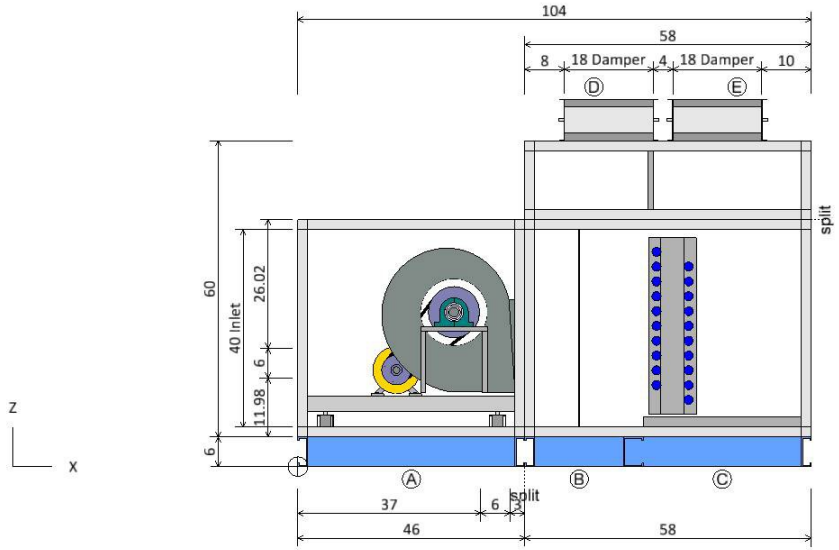

ELEVATION VIEW

Component Key		
Ⓐ	Supply Fan	
	Fan Type:	Centrifugal DWDI
	Fan Size (Class):	18 (2)
	Air Flowrate:	8280.0 cfm
	T.S.P:	2.3 insWg
	Motor Power:	10.0 HP
	Right Door (WxH):	30 ins x 40 ins
	Left Door (WxH):	30 ins x 40 ins
Ⓑ	Diffuser	
	Right Door (WxH):	18 ins x 40 ins
	Left Door (WxH):	18 ins x 40 ins
Ⓒ	Chilled Water coil	
	Coil Model:	5WL0806B
	Total Capacity:	265791.0 Btu/hr
	Right Door (WxH):	20 ins x 34 ins
	Left Door (WxH):	20 ins x 34 ins
Ⓓ	Hot Water Coil	
	Coil Model:	5WH0001C
	Total Capacity:	0.0 Btu/hr
Ⓔ	Access Section	

Plan/Elevation - No Ends	Unit Tag: AHU-6 (Klenk)			Sales Office: HTS Texas		
Product: Vision Air Handler	Project Name: Klein ISD Klenk ES AHU replacements			Sales Engineer:		
Model: CAH018GMAM	Jan. 17, 2026	Ver/Rev:	Sheet: 1 of 1	Scale: NTS	Tolerance: +/-0.25"	Dwg Units: in

DAIKIN
13600 Industrial Park Blvd, Minneapolis, MN 55441
www.DaikinApplied.com Software Version: 13.91

All opening dimensions have a 1" mounting flange along the inner edge. The actual airflow area of the opening is 2" smaller in each dimension.

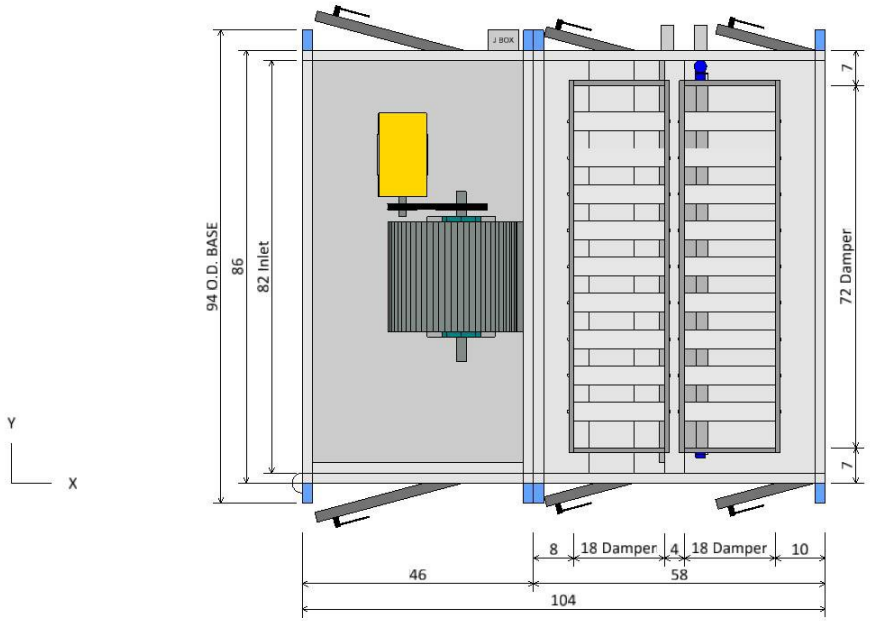

PLAN VIEW

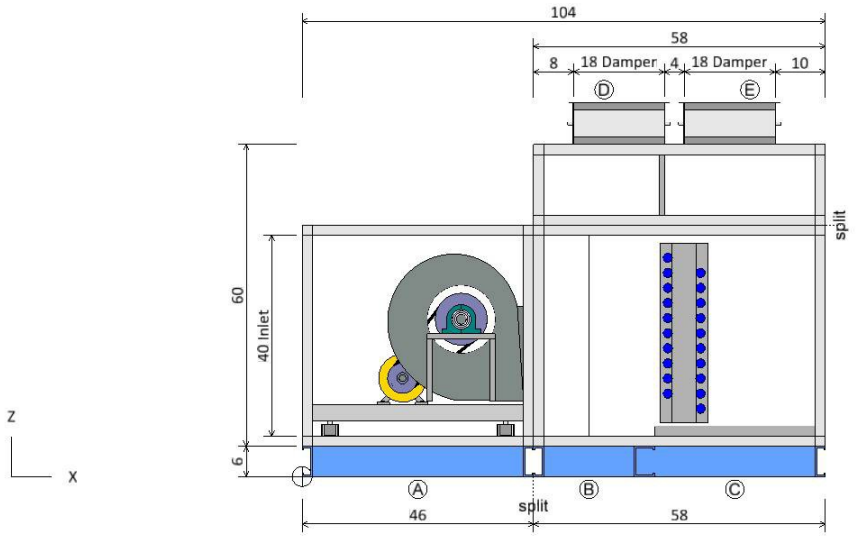

ELEVATION VIEW

Component Key

	Type	X	Y	Z	Wid	Hgt
Ⓐ	Supply Fan Opening	0.00	2.00	8.00	82.00	40.00
Ⓓ	Hot Water Coil MZ hot deck output	54.00	2.00	66.00	72.00	18.00

Note: Dimensions are measured from the origin point.
Note: Openings with or without dampers are recessed into the unit by approximately 1.75 in.

Opening/Damper Connections	Unit Tag: AHU-6 (Klenk)			Sales Office: HTS Texas		
Product: Vision Air Handler	Project Name: Klein ISD Klenk ES AHU replacements			Sales Engineer:		
Model: CAH018GMAM	Jan. 17, 2026	Ver/Rev:	Sheet: 1 of 1	Scale: NTS	Tolerance: +/-0.25"	Dwg Units: in

DAIKIN
13600 Industrial Park Blvd, Minneapolis, MN 55441
www.DaikinApplied.com Software Version: 13.91

All opening dimensions have a 1" mounting flange along the inner edge. The actual airflow area of the opening is 2" smaller in each dimension.

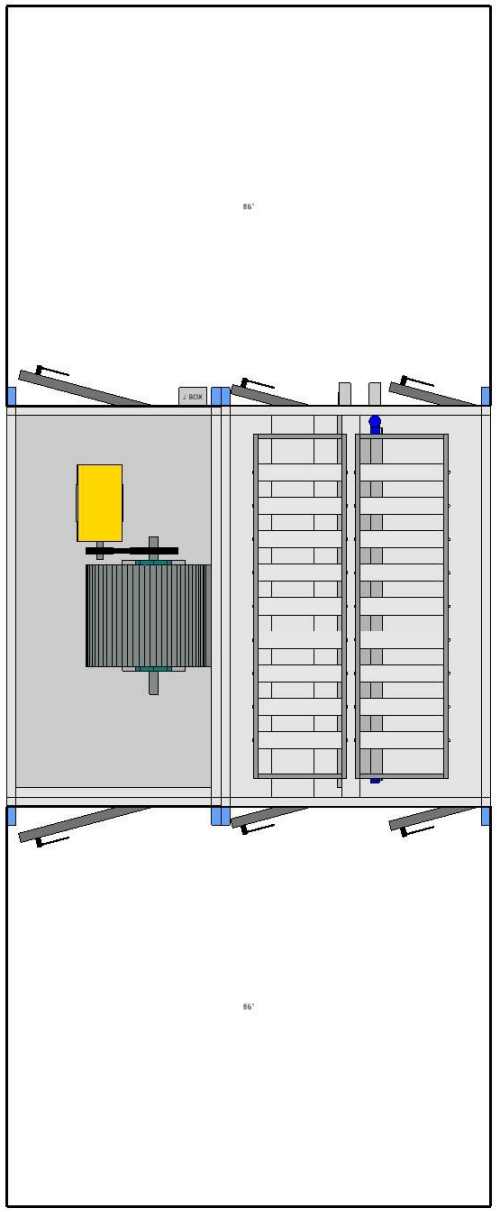

PLAN VIEW

Notes
Check local electrical component service clearance codes for specific distances. Access is only required on one side of the unit.

Service Clearance View	Unit Tag: AHU-6 (Klenk)			Sales Office: HTS Texas		
Product: Vision Air Handler	Project Name: Klein ISD Klenk ES AHU replacements			Sales Engineer:		
Model: CAH018GMAM	Jan. 17, 2026	Ver/Rev:	Sheet: 1 of 1	Scale: NTS	Tolerance: +/-0.25"	Dwg Units: in

DAIKIN
13600 Industrial Park Blvd, Minneapolis, MN 55441
www.DaikinApplied.com Software Version: 13.91

All opening dimensions have a 1" mounting flange along the inner edge. The actual airflow area of the opening is 2" smaller in each dimension.

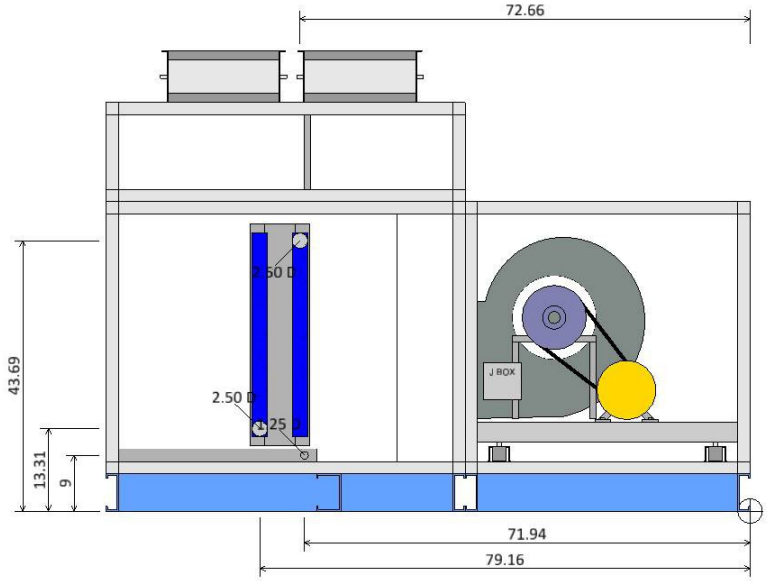

LEFT ELEVATION VIEW

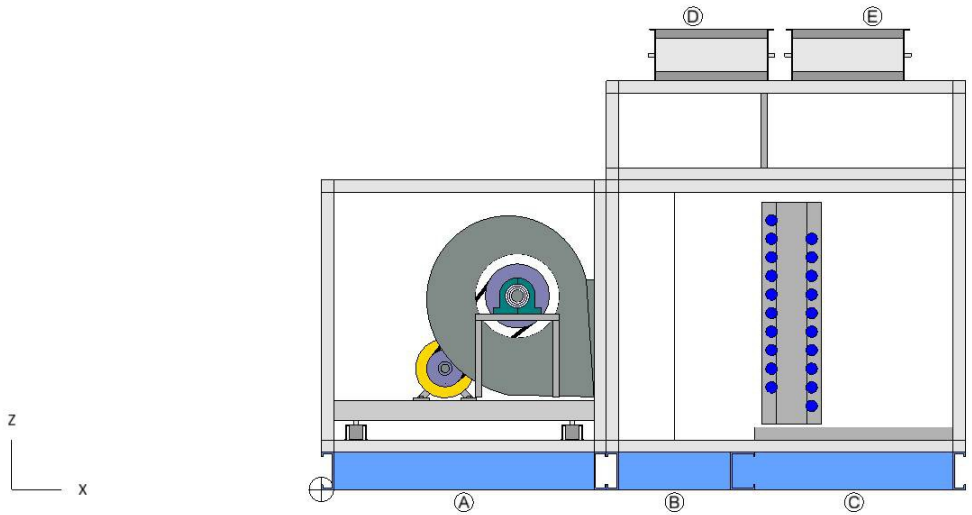

RIGHT ELEVATION VIEW

Coil and Drain Connections					
	Type	X	Y	Z	Diam
Ⓒ	Chilled Water coil Condensate drain conn:	71.94	88.90	9.00	1.25
	Cold water inlet:	79.16	93.00*	13.31	2.50
	Cold water outlet:	72.66	93.00*	43.69	2.50

Notes:
Dimensions are measured from the origin point.
* value varies +/- 1 in.

Coil and Drain Connections	Unit Tag: AHU-6 (Klenk)			Sales Office: HTS Texas		
Product: Vision Air Handler	Project Name: Klein ISD Klenk ES AHU replacements			Sales Engineer:		
Model: CAH018GMAM	Jan. 17, 2026	Ver/Rev:	Sheet: 1 of 1	Scale: NTS	Tolerance: +/-0.25"	Dwg Units: in

DAIKIN
13600 Industrial Park Blvd, Minneapolis, MN 55441
www.DaikinApplied.com Software Version: 13.91

All opening dimensions have a 1" mounting flange along the inner edge. The actual airflow area of the opening is 2" smaller in each dimension.

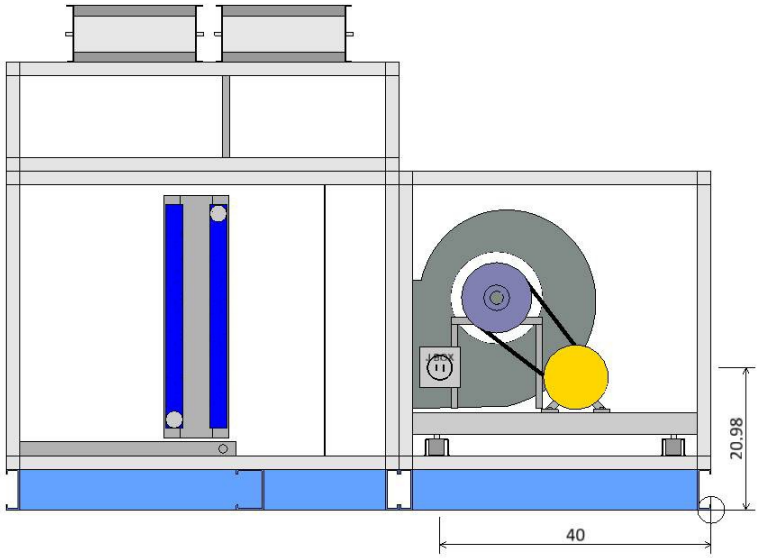

LEFT ELEVATION VIEW

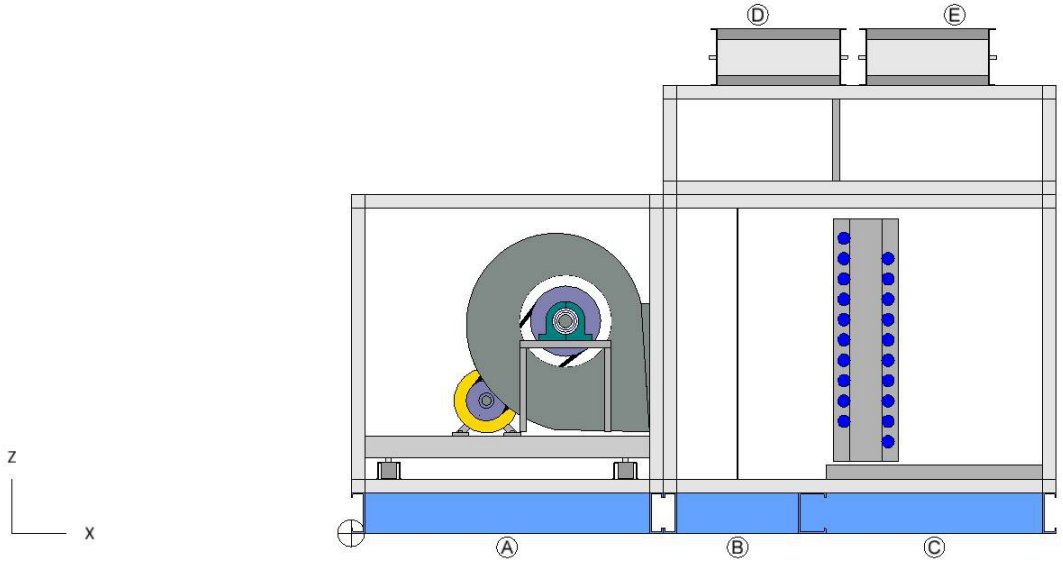

RIGHT ELEVATION VIEW

Component Key

	Type	X	Y	Z	Volts	Phase
Ⓐ	Supply Fan Fan	40.00	86.00	20.98	460	3

Note: Dimensions are measured from the origin point.

Electrical Connections	Unit Tag: AHU-6 (Klenk)			Sales Office: HTS Texas		
Product: Vision Air Handler	Project Name: Klein ISD Klenk ES AHU replacements			Sales Engineer:		
Model: CAH018GMAM	Jan. 17, 2026	Ver/Rev:	Sheet: 1 of 1	Scale: NTS	Tolerance: +/-0.25"	Dwg Units: in

DAIKIN
13600 Industrial Park Blvd, Minneapolis, MN 55441
www.DaikinApplied.com Software Version: 13.91

All opening dimensions have a 1" mounting flange along the inner edge. The actual airflow area of the opening is 2" smaller in each dimension.

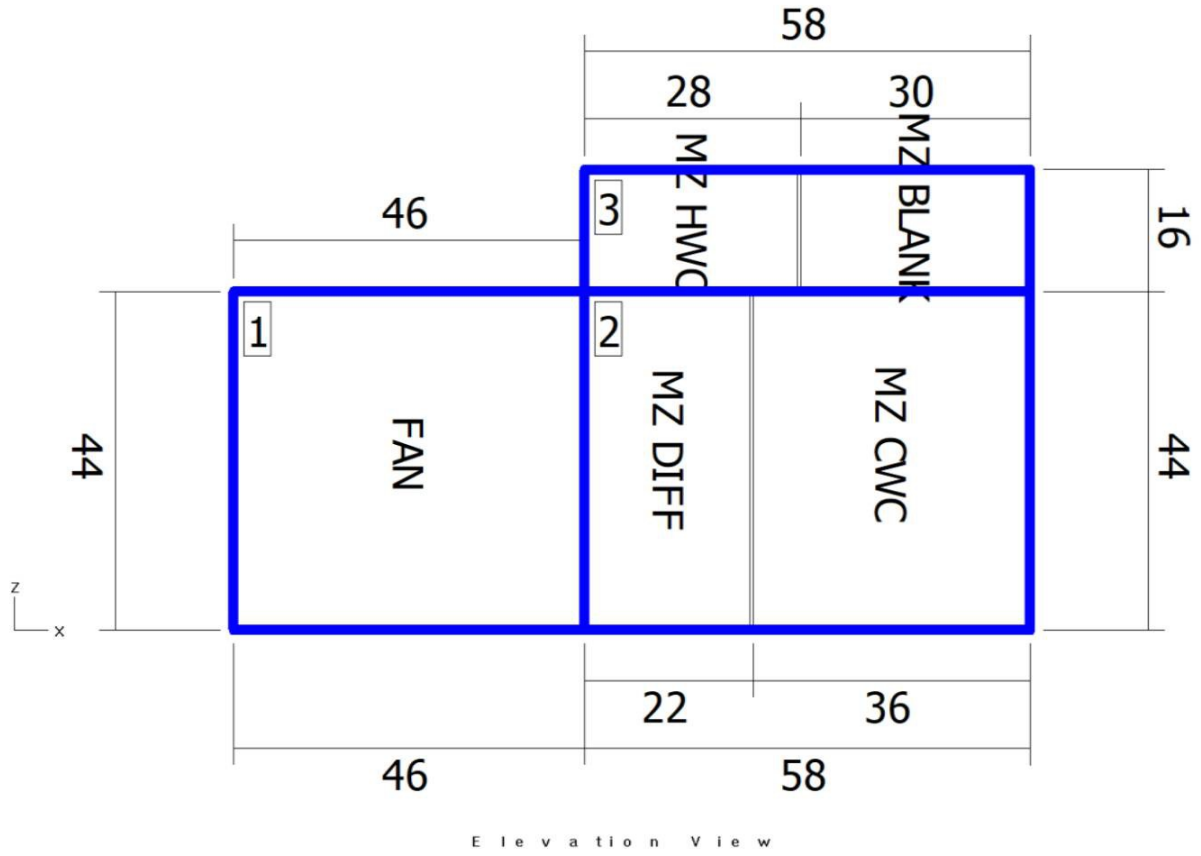

Elevation View

Shipping Sections

Section	Weight (lb)	X	Y	Z
Section 1	1296.18	46	86	44
Section 2	1246.29	58	86	44
Section 3	379.18	58	86	16
Total Unit	2921.66	104	86	60

Note: Base rails, curb ready base, coil connectors, drain connectors, and control boxes not included in height X, Y, Z dimensions.
Shipping section may be 2" longer in air flow direction due to internal splice joint.
Vertical multizone section : Add 8.38" to section height if dampers are installed.

Shipping Sections	Unit Tag: AHU-6 (Klenk)			Sales Office: HTS Texas		
Product: Vision Air Handler	Project Name: Klein ISD Klenk ES AHU replacements			Sales Engineer:		
Model: CAH018GMAM	Jan. 17, 2026	Ver/Rev:	Sheet: 1 of 1	Scale: NTS	Tolerance: +/-0.25"	Dwg Units: in

DAIKIN
13600 Industrial Park Blvd, Minneapolis, MN 55441
www.DaikinApplied.com Software Version: 13.91

All opening dimensions have a 1" mounting flange along the inner edge. The actual airflow area of the opening is 2" smaller in each dimension.

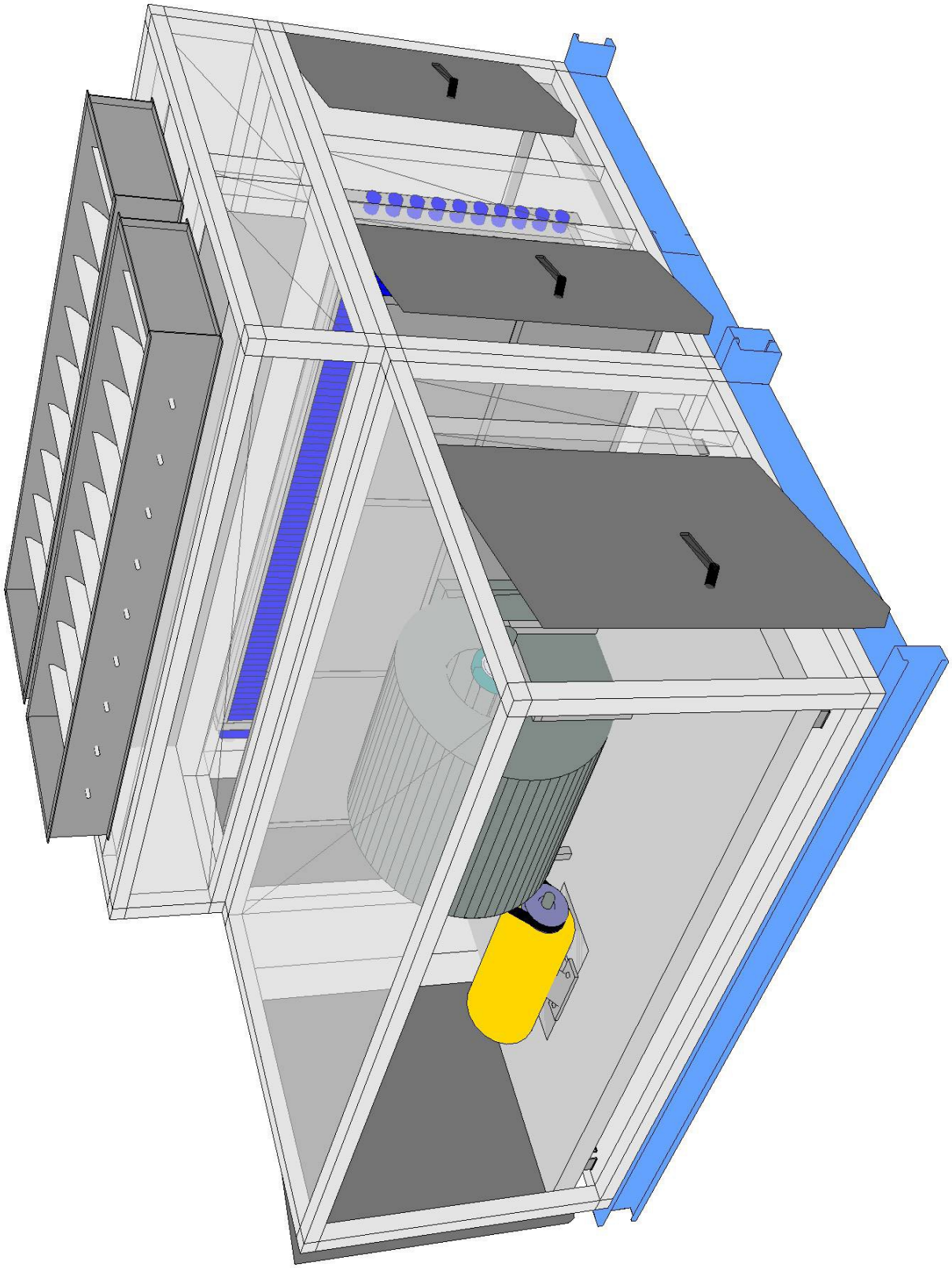

Product Drawing	Unit Tag: AHU-6 (Klenk)	Sales Office: HTS Texas	DAIKIN
Product: Vision Air Handler	Project Name: Klein ISD Klenk ES AHU replacement	Sales Engineer:	13600 Industrial Park Blvd, Minneapolis, MN 55441
Model: CAH018GMAM	Jan. 17, 2026 | Ver/Rev: | Sheet: 1 of 1 | Scale: NTS | Tolerance: +/-0.25" | Dwg Units: in		www.DaikinApplied.com Software Version: 13.91

All opening dimensions have a 1" mounting flange along the inner edge. The actual airflow area of the opening is 2" smaller in each dimension.

Daikin AHU Fan Curve

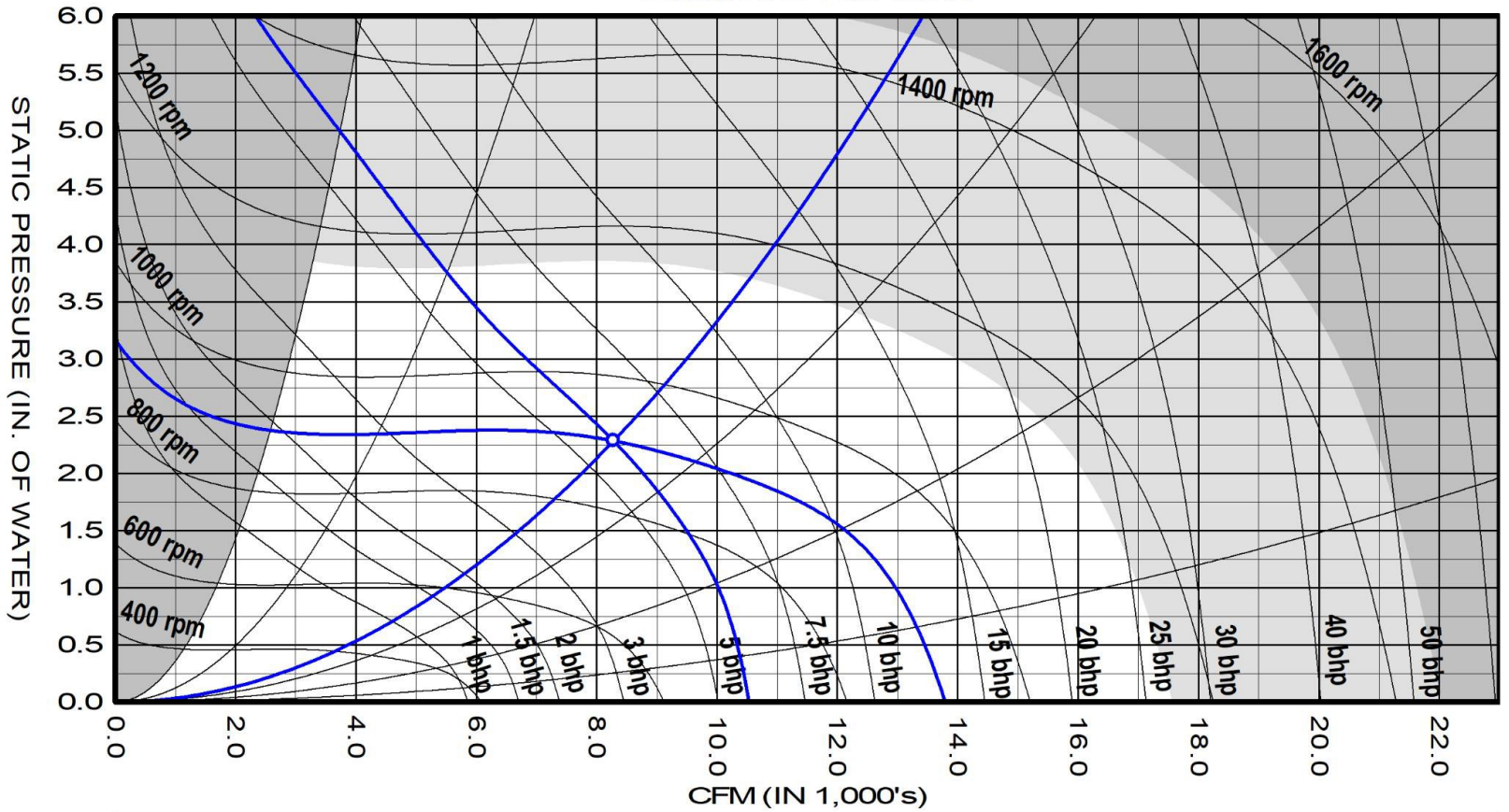

18.03" Forward Curved Supply Fan at Standard Conditions					
Air volume	8280	cfm	Fan speed	907	rpm
Total static	2.28	insWg	Max speed	1450	rpm
Fan Shaft Power	5.8	bhp	Efficiency	51.2	%
Fan Energy Index(FEI)	0.96				

Unit tagging	AHU-6 (Klenk)	Date	January-17-2026
Job name	Klein ISD Klenk ES AHU replacements	Time	09:42

AHRI CERTIFIED

Supply fan performance is certified in accordance with the Central Station Air-Handling Unit Certification Program, which is based on AHRI Standard 430.

Job Information	Technical Data Sheet
Job Name	Klein ISD Klenk ES AHU replacements
Date	January 17 2026
Submitted By	Salas O'Brien
Software Version	13.91
Unit Tag	AHU-6 Filter

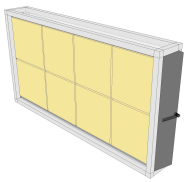

Unit Overview

Model Number	Supply					
	Air Volume cfm	Static Pressure		External Dimensions		
		External inWc	Total inWc	Height in	Width in	Length in
CAC019GVAM	8190	0.75	0.00	46*	86*	12

**Not including base rails, coil connectors, drain connectors and control boxes.*

Unit

Model Number:	CAC019GVAM		
Approval:	ETL Listed / ETL Listed to Canadian Safety Standards (ETL Label / ETLc Label)		
Outer Panel:	18 gauge G90 Galvanized Steel (unpainted)		
Liner:	24 gauge Galvanized Steel (unless noted per section)		
Insulation:	R-13 Injected Foam		
Unit Configuration:	Inline horizontal	**Drive (Handling) Location:**	Right
Base:	None	**Wall Thickness:**	2 in
Altitude:	0 ft	**Parts Warranty:**	Additional One Year, Two Year Total

Panel Filter

Component: 1 | Length: 12 in | Shipping Section: 1

Type	Efficiency	Nominal Face Velocity	Actual Face Velocity	Actual Face Area	Air Volume	Filter Loading
Pre Pleat	MERV 13	351 ft/min	373 ft/min	21.9 ft²	8190 cfm	Side

Air Pressure Drop				Number of Filters	Height	Width	Depth
Clean Air	Mean Air	Dirty Air	User Spec				
0.23 inWc	**0.62** inWc	1.00 inWc	N/A	2	20 in	24 in	2 in
				6	20 in	20 in	2 in

Door

Location	Drive Side Door Width	Opp. Drv. Side Door Width	Opening
Both sides	8 in	8 in	Outward

Unit Sound Power (dB)

Type	63 Hz	125 Hz	250 Hz	500 Hz	1000 Hz	2000 Hz	4000 Hz	8000 Hz
Radiated:	64	54	48	41	39	41	46	51
Unit Discharge:	64	54	48	41	39	41	46	51
Unit Return:	64	54	48	41	39	41	46	51

Shipping Section Details

Section	Length in	Weight lb	Corner Weights (lb)				Center of Gravity (in)		
			P1	P2	P3	P4	XX	YY	ZZ
1	12	194	48	48	48	48	6	43	23
Entire Unit	**12**	**194**	**48**	**48**	**48**	**48**	**6**	**43**	**23**

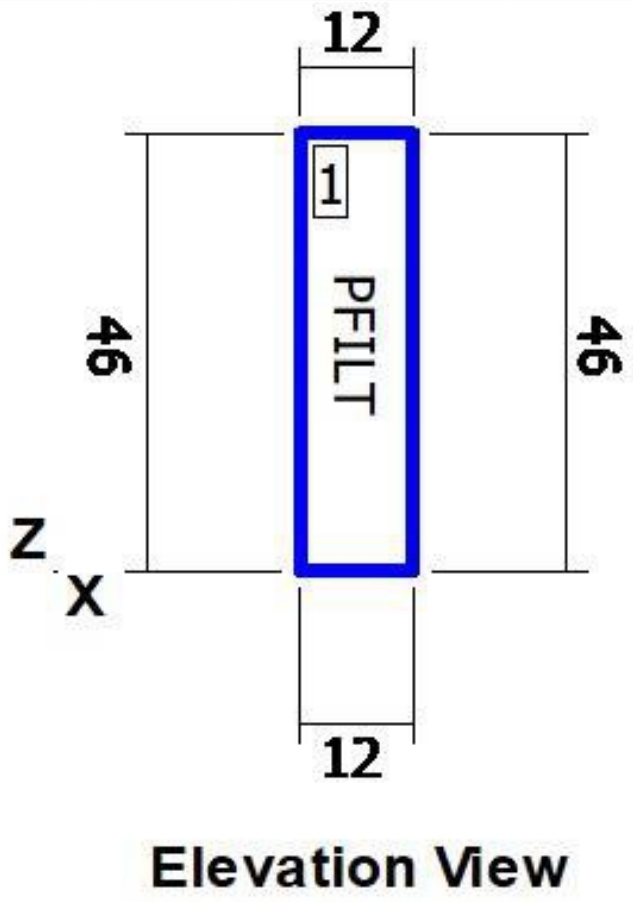

Elevation View

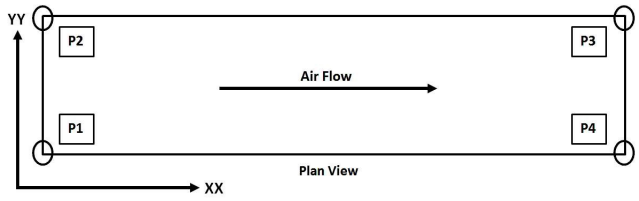

NOTE: Special components aren't included in the corner weights and center of gravity data.

Shipping Protection

None

Supply Static Pressure Drop

Component	Option	Static Pressure Drop
Panel Filter	Panel Filter	0.62 insWg
External Static	External Static	0.75 insWg
Total Supply Fan Static		

AHRI Certification

The air-handler is selected outside of the scope of AHRI Standard 430/431

Notes

Standard
1. As a standalone component, unit meets or exceeds requirements of ASHRAE 90.1 - 2007. The approving authority is responsible for compliance of multi - component building systems.

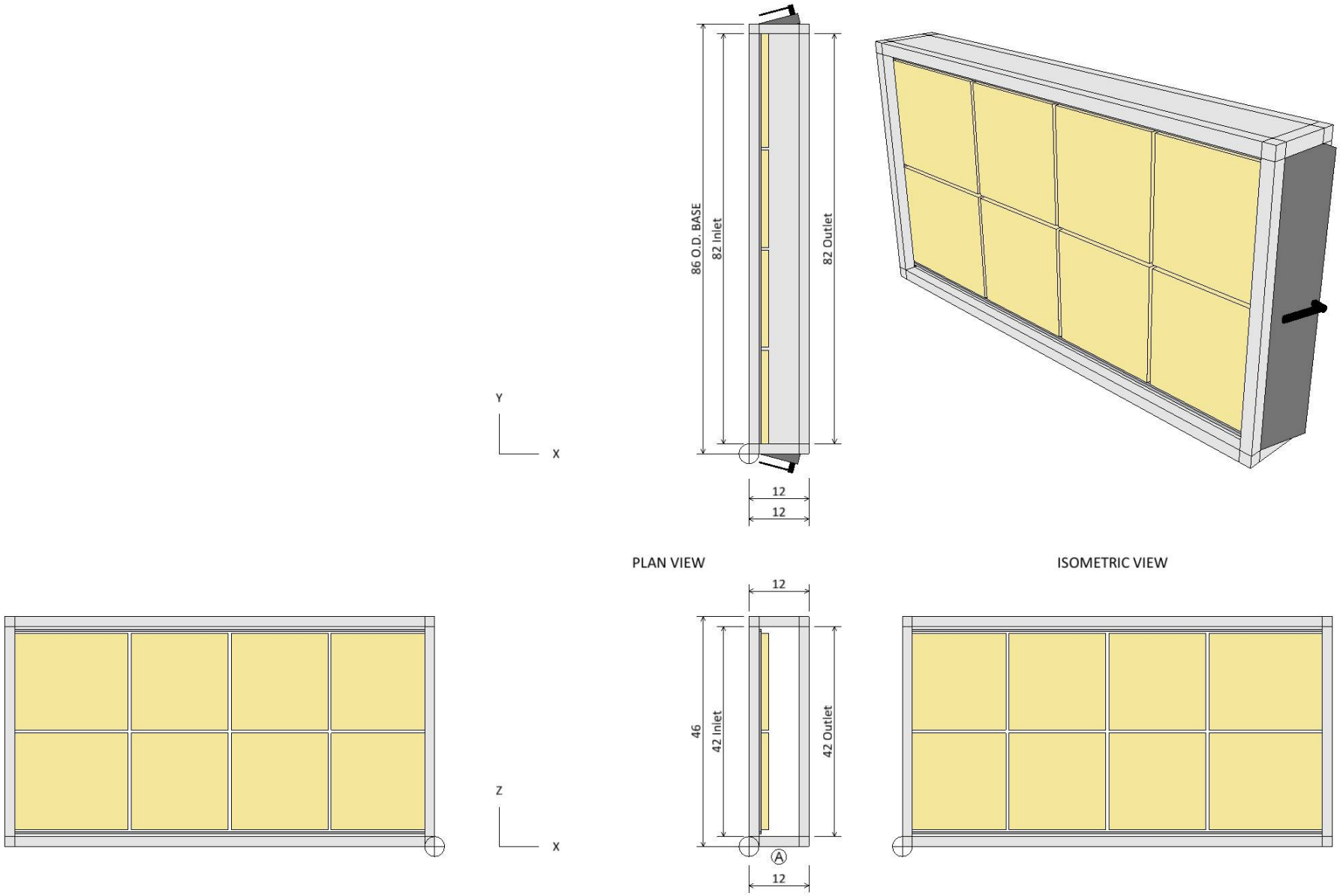

Plan/Elevation	Unit Tag: AHU-6 Filter			Sales Office: HTS Texas		
Product: Vision Air Handler	Project Name: Klein ISD Klenk ES AHU replacements			Sales Engineer:		
Model: CAC019GVAM	Jan. 17, 2026	Ver/Rev:	Sheet: 1 of 1	Scale: NTS	Tolerance: +/-0.25"	Dwg Units: in

DAIKIN
13600 Industrial Park Blvd, Minneapolis, MN 55441
www.DaikinApplied.com Software Version: 13.91

All opening dimensions have a 1" mounting flange along the inner edge. The actual airflow area of the opening is 2" smaller in each dimension.

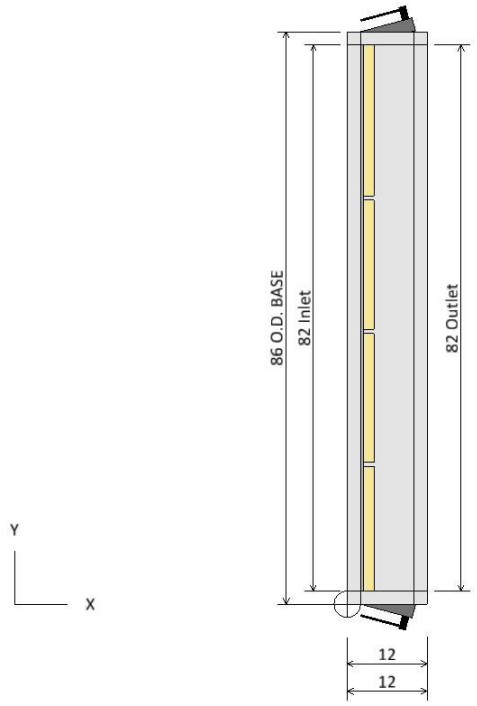

PLAN VIEW

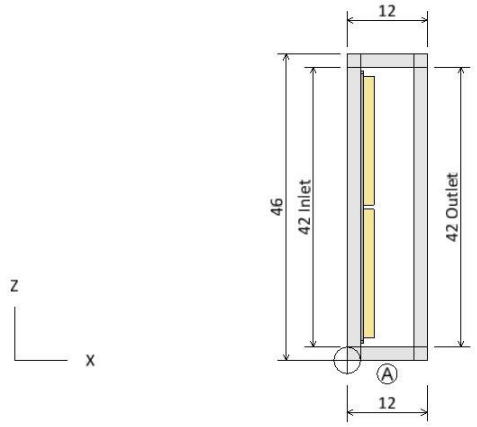

ELEVATION VIEW

Component Key	
Ⓐ	Panel Filter Filter Type: PrePleat (MERV 13) Right Door (WxH): 8 ins x 42 ins Left Door (WxH): 8 ins x 42 ins

Plan/Elevation - No Ends	Unit Tag: AHU-6 Filter			Sales Office: HTS Texas		
Product: Vision Air Handler	Project Name: Klein ISD Klenk ES AHU replacements			Sales Engineer:		
Model: CAC019GVAM	Jan. 17, 2026	Ver/Rev:	Sheet: 1 of 1	Scale: NTS	Tolerance: +/-0.25"	Dwg Units: in

DAIKIN
13600 Industrial Park Blvd, Minneapolis, MN 55441
www.DaikinApplied.com Software Version: 13.91

All opening dimensions have a 1" mounting flange along the inner edge. The actual airflow area of the opening is 2" smaller in each dimension.

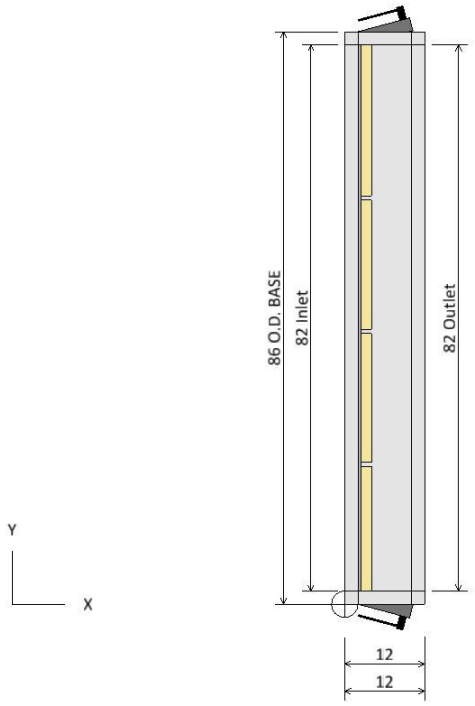

PLAN VIEW

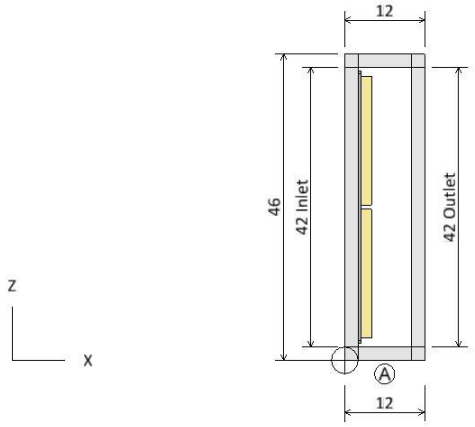

ELEVATION VIEW

Component Key

	Type	X	Y	Z	Wid	Hgt
Ⓐ	Panel Filter Opening	0.00	2.00	2.00	82.00	42.00
	Opening	12.00	2.00	2.00	82.00	42.00

Note: Dimensions are measured from the origin point.
Note: Openings with or without dampers are recessed int the unit by approximately 1.75 in.

Opening/Damper Connections	Unit Tag: AHU-6 Filter			Sales Office: HTS Texas		
Product: Vision Air Handler	Project Name: Klein ISD Klenk ES AHU replacements			Sales Engineer:		
Model: CAC019GVAM	Jan. 17, 2026	Ver/Rev:	Sheet: 1 of 1	Scale: NTS	Tolerance: +/-0.25"	Dwg Units: in

DAIKIN
13600 Industrial Park Blvd, Minneapolis, MN 55441
www.DaikinApplied.com Software Version: 13.91

All opening dimensions have a 1" mounting flange along the inner edge. The actual airflow area of the opening is 2" smaller in each dimension.

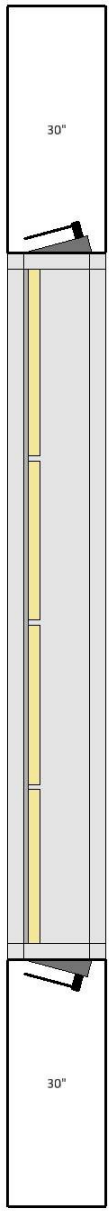

PLAN VIEW

Notes
Check local electrical component service clearance codes for specific distances. Access is only required on one side of the unit.

Service Clearance View	Unit Tag: AHU-6 Filter			Sales Office: HTS Texas		
Product: Vision Air Handler	Project Name: Klein ISD Klenk ES AHU replacements			Sales Engineer:		
Model: CAC019GVAM	Jan. 17, 2026	Ver/Rev:	Sheet: 1 of 1	Scale: NTS	Tolerance: +/-0.25"	Dwg Units: in

DAIKIN
13600 Industrial Park Blvd, Minneapolis, MN 55441
www.DaikinApplied.com Software Version: 13.91

All opening dimensions have a 1" mounting flange along the inner edge. The actual airflow area of the opening is 2" smaller in each dimension.

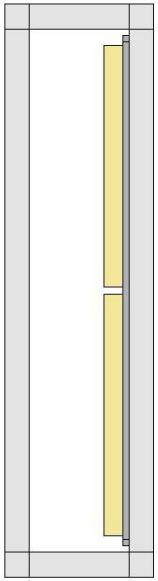

LEFT ELEVATION VIEW

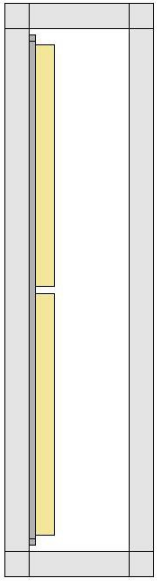

RIGHT ELEVATION VIEW

Coil and Drain Connections

Note: Dimensions are measured from the origin point.

Coil and Drain Connections	Unit Tag: AHU-6 Filter			Sales Office: HTS Texas		
Product: Vision Air Handler	Project Name: Klein ISD Klenk ES AHU replacements			Sales Engineer:		
Model: CAC019GVAM	Jan. 17, 2026	Ver/Rev:	Sheet: 1 of 1	Scale: NTS	Tolerance: +/-0.25"	Dwg Units: in

DAIKIN
13600 Industrial Park Blvd, Minneapolis, MN 55441
www.DaikinApplied.com Software Version: 13.91

All opening dimensions have a 1" mounting flange along the inner edge. The actual airflow area of the opening is 2" smaller in each dimension.

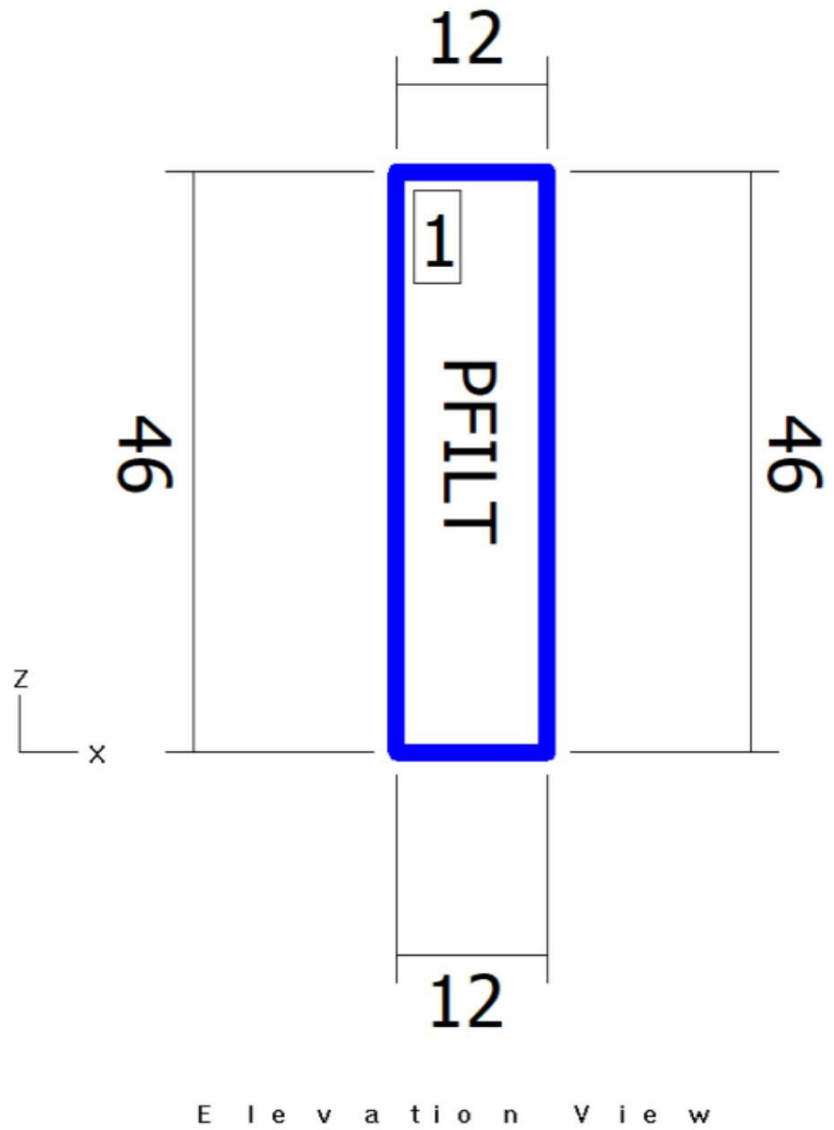

E l e v a t i o n V i e w

Shipping Sections

Section	Weight (lb)	X	Y	Z
Section 1	193.98	12	86	46
Total Unit	193.98	12	86	46

Note: Base rails, curb ready base, coil connectors, drain connectors, and control boxes not included in height X, Y, Z dimensions.
Shipping section may be 2" longer in air flow direction due to internal splice joint.

Shipping Sections	Unit Tag: AHU-6 Filter			Sales Office: HTS Texas		
Product: Vision Air Handler	Project Name: Klein ISD Klenk ES AHU replacements			Sales Engineer:		
Model: CAC019GVAM	Jan. 17, 2026	Ver/Rev:	Sheet: 1 of 1	Scale: NTS	Tolerance: +/-0.25"	Dwg Units: in

DAIKIN
13600 Industrial Park Blvd, Minneapolis, MN 55441
www.DaikinApplied.com Software Version: 13.91

All opening dimensions have a 1" mounting flange along the inner edge. The actual airflow area of the opening is 2" smaller in each dimension.

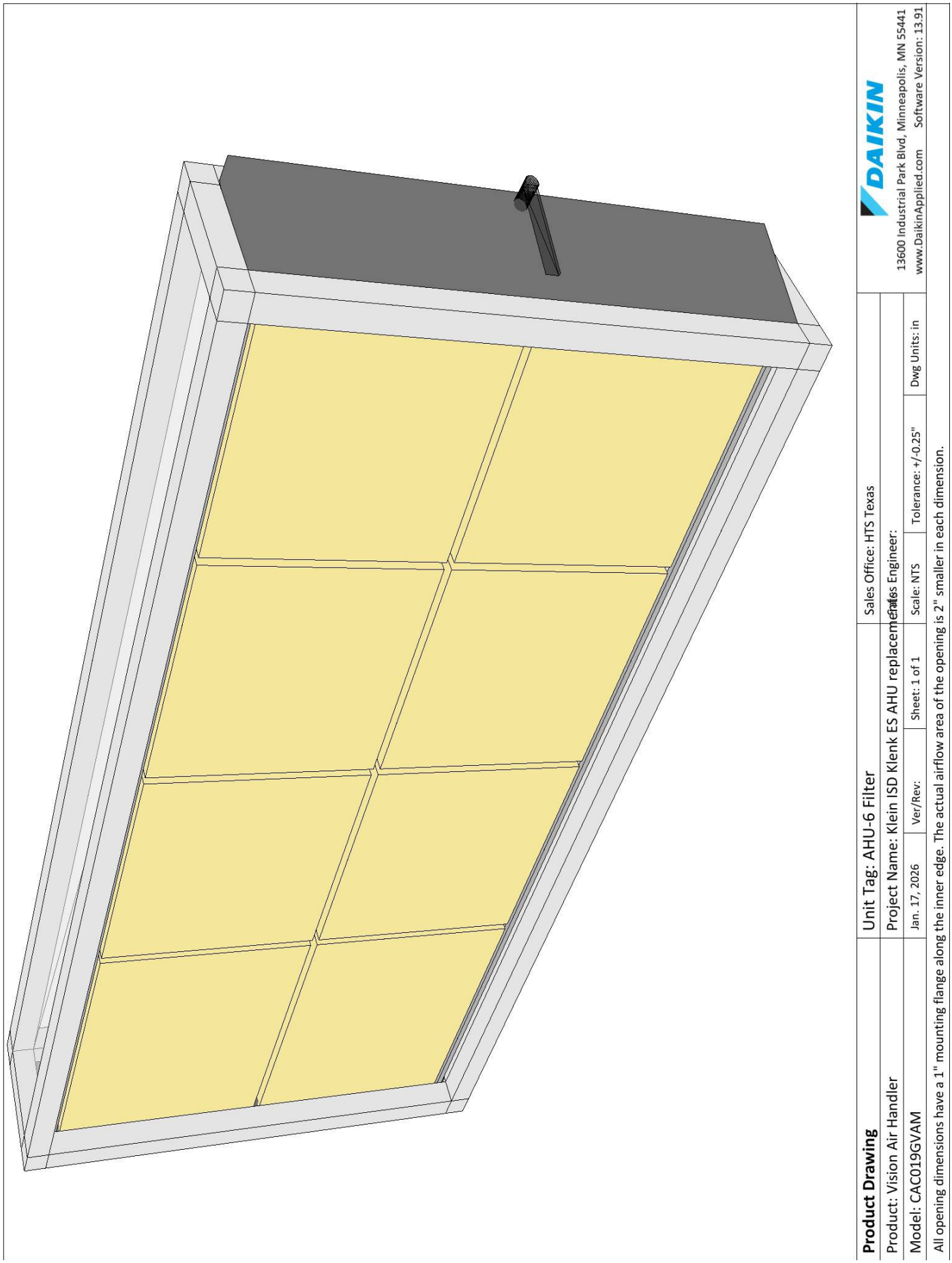

Product Drawing	Unit Tag: AHU-6 Filter	Sales Office: HTS Texas
Product: Vision Air Handler	Project Name: Klein ISD Klenk ES AHU replacements	Sales Engineer:
Model: CAC019GVAM	Jan. 17, 2026 | Ver/Rev: | Sheet: 1 of 1 | Scale: NTS | Tolerance: +/-0.25" | Dwg Units: in	

All opening dimensions have a 1" mounting flange along the inner edge. The actual airflow area of the opening is 2" smaller in each dimension.

DAIKIN
13600 Industrial Park Blvd, Minneapolis, MN 55441
www.DaikinApplied.com Software Version: 13.91

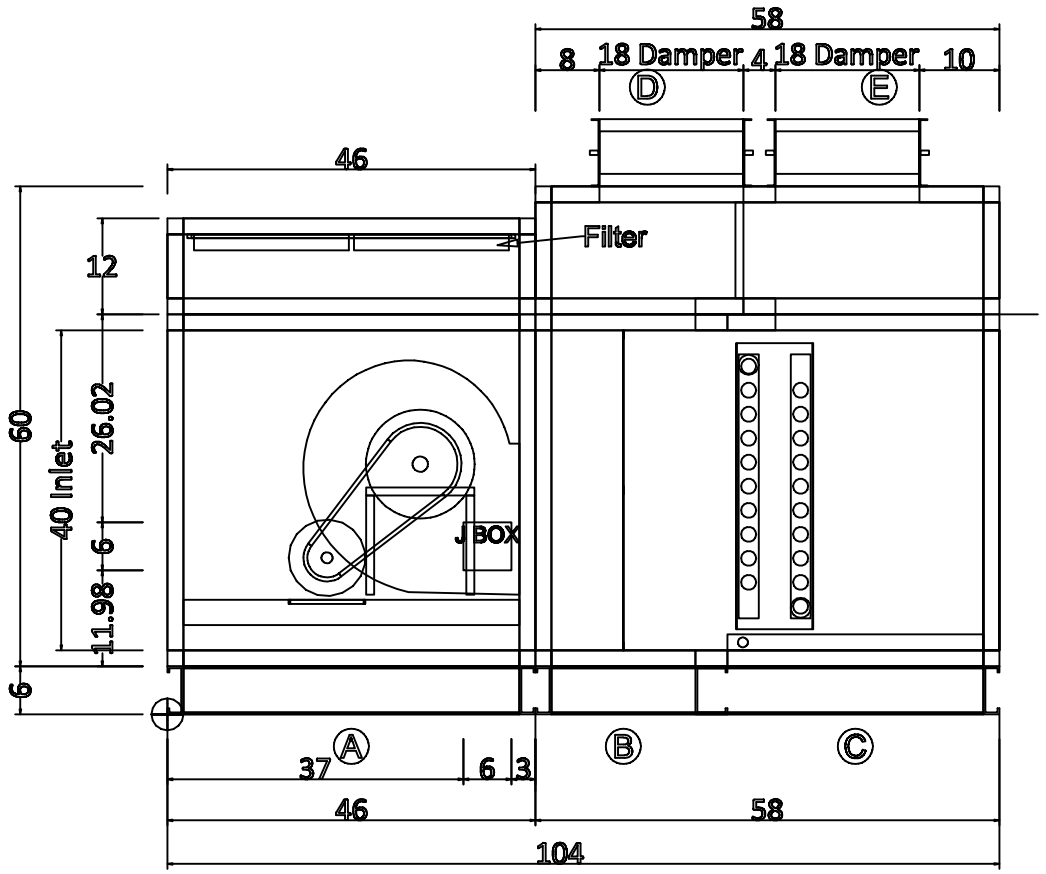

ELEVATION VIEW

Plan/Elevation - No Ends	Unit Tag: AHU-6 (Klenk) Top Filter			Sales Office: HTS Texas			
Product: Vision Air Handler	Project Name: Klein ISD Klenk ES AHU replacements			Sales Engineer:			
Model: CAH019GMAM	Dec. 3, 2025	Ver/Rev:	Sheet: 1 of 1	Scale: NTS	Tolerance: +/-0.25"	Dwg Units: in	

DAIKIN
13600 Industrial Park Blvd, Minneapolis, MN 55441
www.DaikinApplied.com Software Version: 13.82

All opening dimensions have a 1" mounting flange along the inner edge. The actual airflow area of the opening is 2" smaller in each dimension.

Job Information	Technical Data Sheet
Job Name	Klein ISD Klenk ES AHU replacements
Date	January 17 2026
Submitted By	Salas O'Brien
Software Version	13.91
Unit Tag	AHU-7 (Klenk)

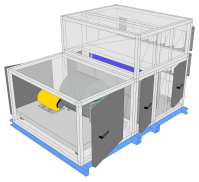

Unit Overview

Model Number	Supply					
	Air Volume cfm	Static Pressure		External Dimensions		
		External inWc	Total inWc	Height in	Width in	Length in
CAH010GMAM	4415	0.70	2.28	36*	64*	94

**Not including base rails, coil connectors, drain connectors and control boxes.*

Unit

Model Number:	CAH010GMAM		
Approval:	ETL Listed / ETL Listed to Canadian Safety Standards (ETL Label / ETLc Label)		
Outer Panel:	18 gauge G90 Galvanized Steel (unpainted)		
Liner:	24 gauge Galvanized Steel (unless noted per section)		
Insulation:	R-13 Injected Foam		
Unit Configuration:	Multizone	**Drive (Handling) Location:**	Left
Base:	4" formed channel	**Wall Thickness:**	2 in
Altitude:	0 ft	**Parts Warranty:**	Additional One Year, Two Year Total

Supply Fan	Component: 1	Length: 42 in	Shipping Section: 1

Fan Performance

Air Volume	Static Pressure			Fan Energy Index(FEI)	Total Input Power	Fan Shaft Power	Fan Wheel Speed		Outlet Velocity
	External	Total	Cabinet				Operating	Maximum	
4415 cfm	0.70 inWc	2.28 inWc	0.60 inWc	1.17	2.5 kW	2.88 BHP	1068 rpm	1725 rpm	2133 ft/min

Fan Data

Fan Type	Blade Type / Class	Quantity of Fans	Wheel Diameter	Number of Blades	Discharge	Motor Location
Centrifugal DWDI	Forward Curved / 2	1	15.00 in	N/A	Bottom horizontal	To Side of Fan

Motor Data

Power	Electrical Supply	Speed	Efficiency	Enclosure	Frame Size	Supplier	Number of Poles	Lock Rotor Current	Full Load Current
7.5 HP	460/60/3 V/Hz/Phase	1750 rpm	Premium	TEFC	213 T frame	Generic	4	70.56 A	9.50 A

Fan Options

Shaft Grounding Kit:	Provided	Isolator Type:	Spring

Drive Package Data*

Fan Sheave	Motor Sheave	Belt	Number of Belts	Actual Drive S.F.	Bearing Type
2BK62H	2BK36H	BX37	2	1.16	Standard - L50 (200K)

**Daikin Applied reserves the right to provide a different but equivalent drive package*

Door

Location	Drive Side Door Width	Opp. Drv. Side Door Width	Opening
Both sides	30 in	30 in	Outward

Special Options

Sound Baffle	Static Pressure
(As casing details)	0.60 inWc

Two Deck Multizone	Component: 2	Length: 52 in	Shipping Section: 2 & 3 & 4

Discharge Location	Number of Zones	Multizone APD*	Damper Type	Actuation
Horizontal / Horizontal	7	0.98 inWc	Low leak / Low leak	None - damper mechanically linked

Note : includes coil & balance plate & diffuser

Note : Cabinet height for multizone extends 24 inches above 'External cabinet height' referenced above.
The damper assembly will add 8.38 inches to the cabinet length for horizontal discharge and 8.38 inches to the height for vertical discharge.

Cold Deck Coil

Coil Model	Total Capacity	Sensible Capacity	Number of Coils	Number of Rows	Fins per Inch	Tube Diameter	Tube Spacing (Face x Row)
5WH0606C	148067 Btu/hr	110913 Btu/hr	1	6	6	0.625 in	1.50 in X 1.299 in

Coil Operating Weight	Coil Dry Weight
231 lb	162 lb

Air Volume	Air Temperature				Coil Air Pressure Drop	Finned Height	Finned Length	Face Area	Face Velocity
	Entering		Leaving						
	Dry Bulb	Wet Bulb	Dry Bulb	Wet Bulb					
4415 cfm	77.8 °F	64.9 °F	54.8 °F	53.7 °F	0.76 inWc	27 in	51 in	9.56 ft²	462 ft/min

Water

Entering	Leaving	Flow Rate	Pressure Drop	Velocity	Fluid Volume	Fluid Weight
45.0 °F	53.2 °F	36.20 gpm	15.00 ftHd	4.30 ft/s	8.0 gal	69.00 lb

Connection [Data Per Coil]				Min. Fin Surface Temp.	Min. Tube Wall Surface Temp.	Fouling Factor
Type	Size	Location	Material			
Threaded	1.50 in	Drive side	Carbon steel	45.0 °F	45.0 °F	0.000

Material				Drain Pan	Drain Side	Electro-Fin Coat	Moisture Eliminator
Fin	Tube	Header	Case				
Aluminum .0075 in	Copper .020 in	Copper	Stainless steel	Stainless steel	Drive side	NA	NA

AHRI 410 Certification

Certified in accordance with the AHRI Forced-Circulation Air-Cooling and Air-Heating Coils Certification Program which is based on AHRI Standard 410 within the Range of Standard Rating Conditions listed in Table 1 of the Standard. Certified units may be found in the AHRI Directory at www.ahridirectory.org

Future Hot Deck Coil(52 ins)

Number of Coils	Number of Rows
1	1

Coil Air Pressure Drop	Finned Height	Finned Width	Face Area	Face Velocity
NA inWc	15 in	48 in	5.00 ft²	883 ft/min

Connection Location	Connection Material
Drive side	Carbon steel

Coil Model	Drain Pan	Drain Pan Side
Future Coil (Not Supplied)	NA	NA

AHRI 410 Certification

Coil is NOT certified by AHRI

Door

Location	Drive Side Door Width	Opp. Drv. Side Door Width	Opening
Both sides	18 in	18 in	Outward

Unit Sound Power (dB)

Type	63 Hz	125 Hz	250 Hz	500 Hz	1000 Hz	2000 Hz	4000 Hz	8000 Hz
Radiated:	72	74	66	61	58	48	46	51
Unit Discharge:	82	84	84	82	80	76	76	71
Unit Return:	79	81	81	79	77	73	73	68

Shipping Section Details

Section	Length in	Weight lb	Corner Weights (lb)				Center of Gravity (in)		
			P1	P2	P3	P4	XX	YY	ZZ
1	42	862	261	186	170	244	20	26	17
2	18	208	47	47	57	57	10	32	16
3	34	698	187	197	162	152	15	33	18
4	52	412	176	192	171	155	24	33	17
Entire Unit	**94**	**2180**	**580**	**532**	**651**	**699**	**52**	**31**	**27**

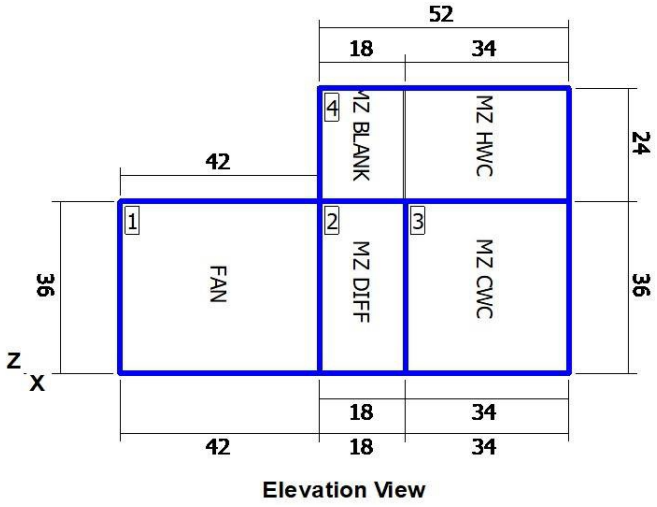

Elevation View

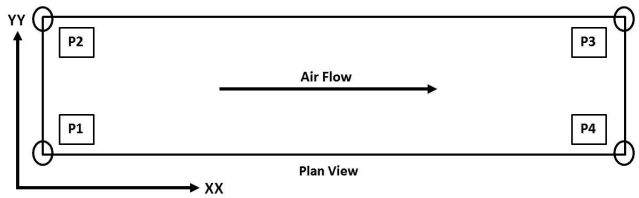

NOTE: Special components aren't included in the corner weights and center of gravity data.

Shipping Protection	None

Supply Static Pressure Drop

Component	Option	Static Pressure Drop
Supply Fan	Cabinet	
Supply Fan	Special	0.60 insWg
Multizone	Multizone	0.98 insWg
External Static	External Static	0.70 insWg
Total Supply Fan Static		2.28 insWg

Minimum Recommended Drain Pan Trap Dimensions

Shipping Section	Component	H
3	Chilled Water coil	1.04

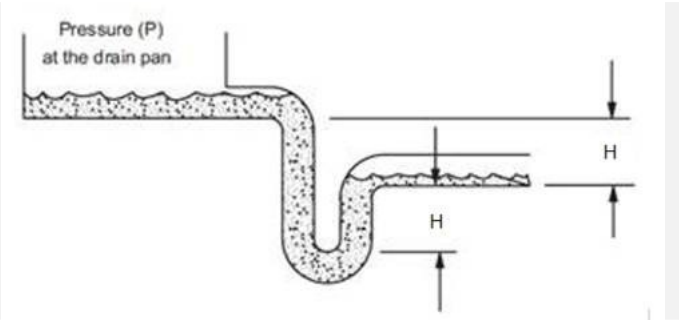

Dimensions provided as a courtesy and are recommended minimums only. Daikin is not responsible for supplying or designing drain pan traps and is not responsible for any damage caused by incorrect trap heights. The dimensions listed above should be reviewed and approved by a licensed plumbing professional.

This calculation is based on an assumption that 0.25 inches of the external static pressure is in the return duct and the remainder is in the supply duct. If actual conditions vary from this assumption then contact Applications for new trap height recommendations.

AHRI Certification

Certified by the AHRI Central Station Air-Handling Unit (AHU) Certification Program, which is based on AHRI Standard 430/431. AHRI certified units are subject to rigorous and continuous testing, have performance ratings independently measured and are third-party verified. Certified units may be found in the AHRI Directory at www.ahridirectory.org.

Notes

Standard
1. As a standalone component, unit meets or exceeds requirements of ASHRAE 90.1 - 2007. The approving authority is responsible for compliance of multi - component building systems.

51MN4W

Klein ISD Klenk ES AHU rep

106

1/17/2026

AHU-7 (Klenk)

Drawing

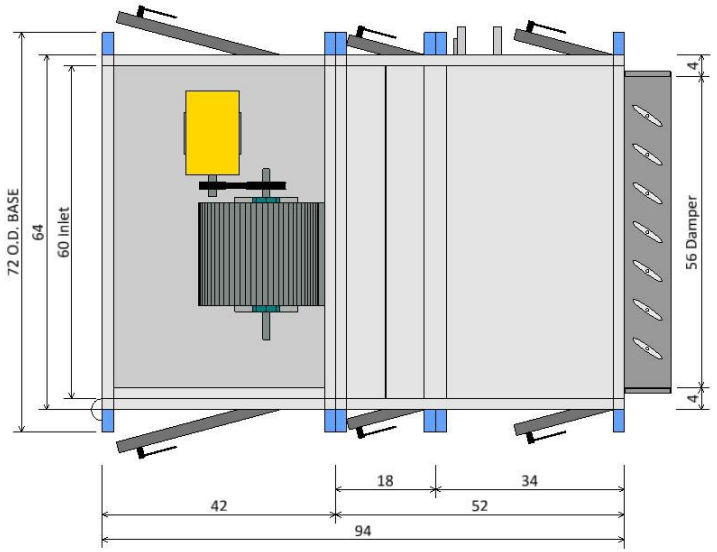

PLAN VIEW

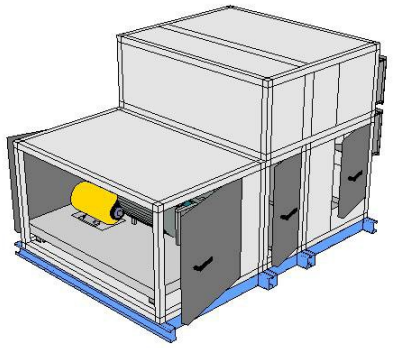

ISOMETRIC VIEW

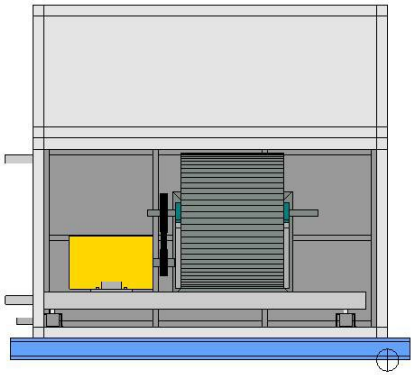

FRONT END VIEW

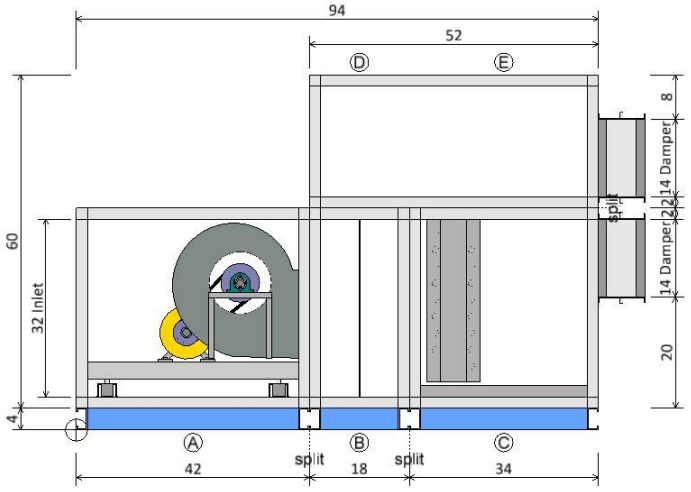

ELEVATION VIEW

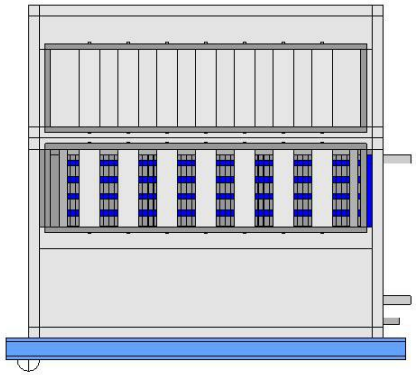

REAR END VIEW

Plan/Elevation	Unit Tag: AHU-7 (Klenk)			Sales Office: HTS Texas		
Product: Vision Air Handler	Project Name: Klein ISD Klenk ES AHU replacements			Sales Engineer:		
Model: CAH010GMAM	Jan. 17, 2026	Ver/Rev:	Sheet: 1 of 1	Scale: NTS	Tolerance: +/-0.25"	Dwg Units: in

DAIKIN

13600 Industrial Park Blvd, Minneapolis, MN 55441

www.DaikinApplied.com Software Version: 13.91

All opening dimensions have a 1" mounting flange along the inner edge. The actual airflow area of the opening is 2" smaller in each dimension.

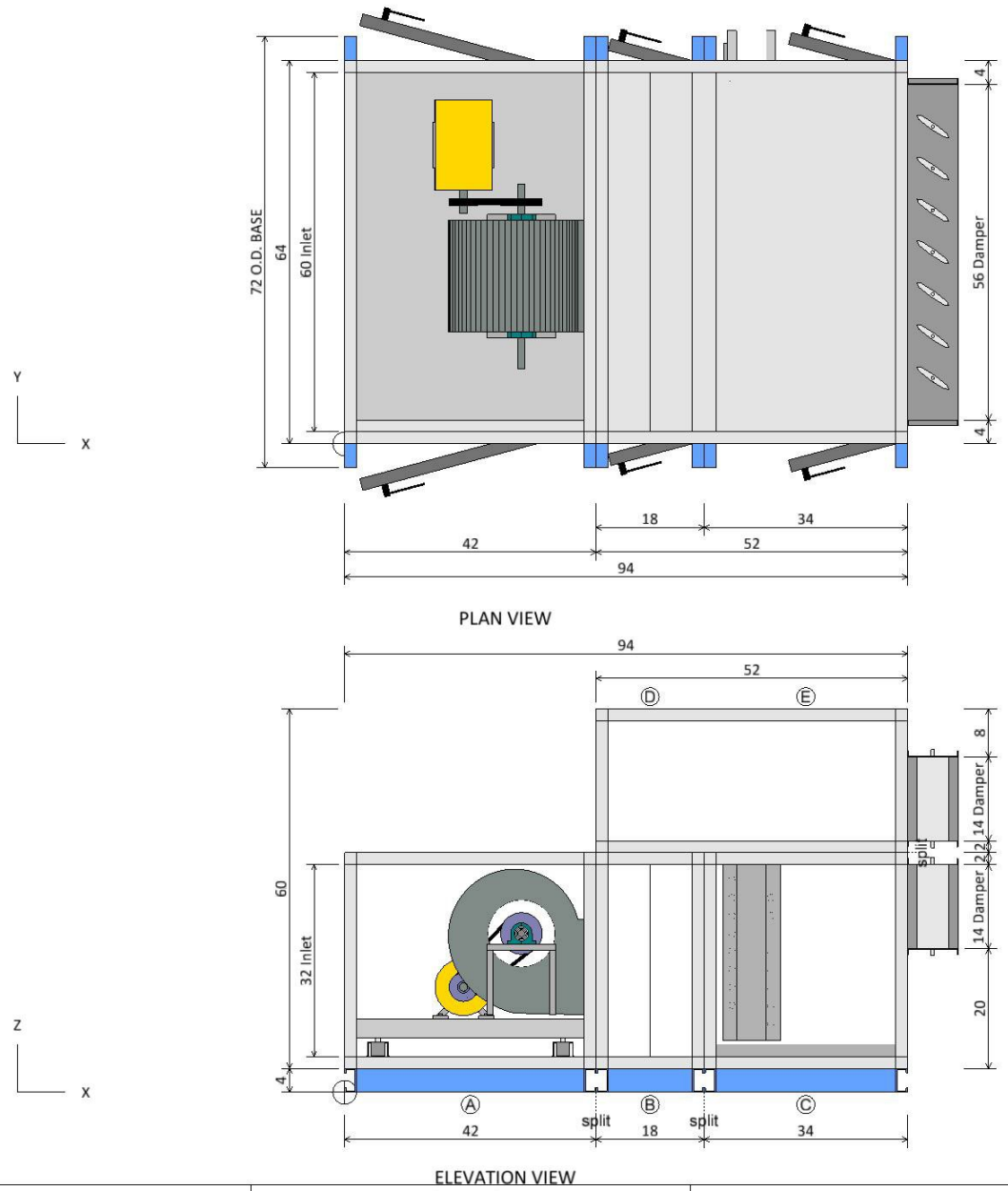

Component Key		
Ⓐ	Supply Fan	
	Fan Type:	Centrifugal DWDI
	Fan Size (Class):	15 (2)
	Air Flowrate:	4415.0 cfm
	T.S.P:	2.3 insWg
	Motor Power:	7.5 HP
	Right Door (WxH):	30 ins x 32 ins
	Left Door (WxH):	30 ins x 32 ins
Ⓑ	Diffuser	
	Right Door (WxH):	14 ins x 32 ins
	Left Door (WxH):	14 ins x 32 ins
Ⓒ	Chilled Water coil	
	Coil Model:	5WH0606C
	Total Capacity:	148067.0 Btu/hr
	Right Door (WxH):	18 ins x 26 ins
	Left Door (WxH):	18 ins x 26 ins
Ⓓ	Access Section	
Ⓔ	Hot Water Coil	
	Coil Model:	5WH0001C
	Total Capacity:	0.0 Btu/hr

Plan/Elevation - No Ends	Unit Tag: AHU-7 (Klenk)			Sales Office: HTS Texas		
Product: Vision Air Handler	Project Name: Klein ISD Klenk ES AHU replacements			Sales Engineer:		
Model: CAH010GMAM	Jan. 17, 2026	Ver/Rev:	Sheet: 1 of 1	Scale: NTS	Tolerance: +/-0.25"	Dwg Units: in

DAIKIN
13600 Industrial Park Blvd, Minneapolis, MN 55441
www.DaikinApplied.com Software Version: 13.91

All opening dimensions have a 1" mounting flange along the inner edge. The actual airflow area of the opening is 2" smaller in each dimension.

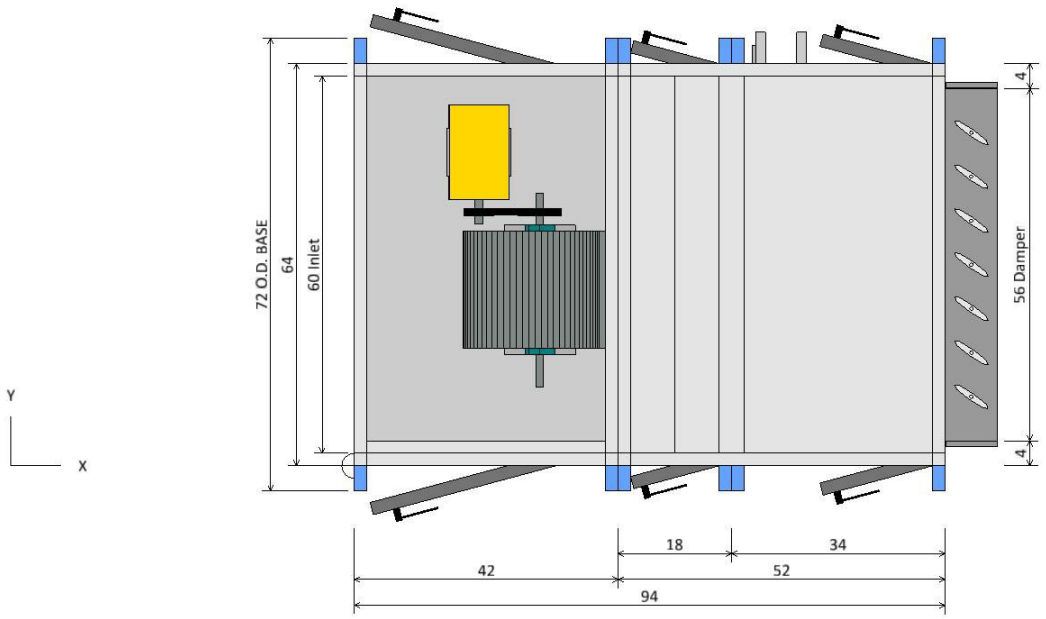

PLAN VIEW

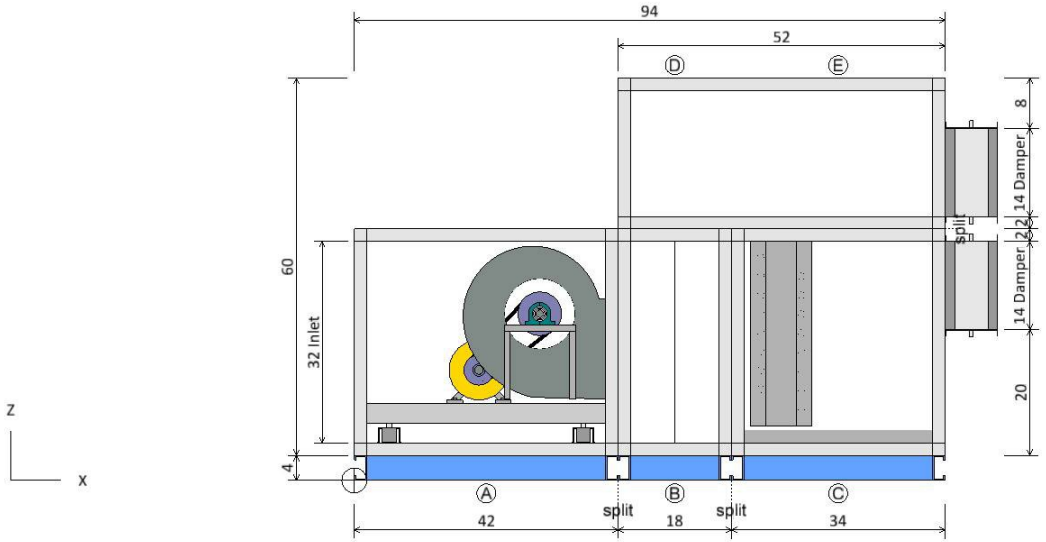

ELEVATION VIEW

Component Key

	Type	X	Y	Z	Wid	Hgt
Ⓐ	Supply Fan Opening	0.00	2.00	6.00	60.00	32.00
Ⓒ	Chilled Water coil MZ cold deck output	102.38	4.00	24.00	56.00	14.00
Ⓔ	Hot Water Coil MZ hot deck output	102.38	4.00	42.00	56.00	14.00

Note: Dimensions are measured from the origin point.
Note: Openings with or without dampers are recessed into the unit by approximately 1.75 in.

Opening/Damper Connections	Unit Tag: AHU-7 (Klenk)			Sales Office: HTS Texas		
Product: Vision Air Handler	Project Name: Klein ISD Klenk ES AHU replacements			Sales Engineer:		
Model: CAH010GMAM	Jan. 17, 2026	Ver/Rev:	Sheet: 1 of 1	Scale: NTS	Tolerance: +/-0.25"	Dwg Units: in

DAIKIN
13600 Industrial Park Blvd, Minneapolis, MN 55441
www.DaikinApplied.com Software Version: 13.91

All opening dimensions have a 1" mounting flange along the inner edge. The actual airflow area of the opening is 2" smaller in each dimension.

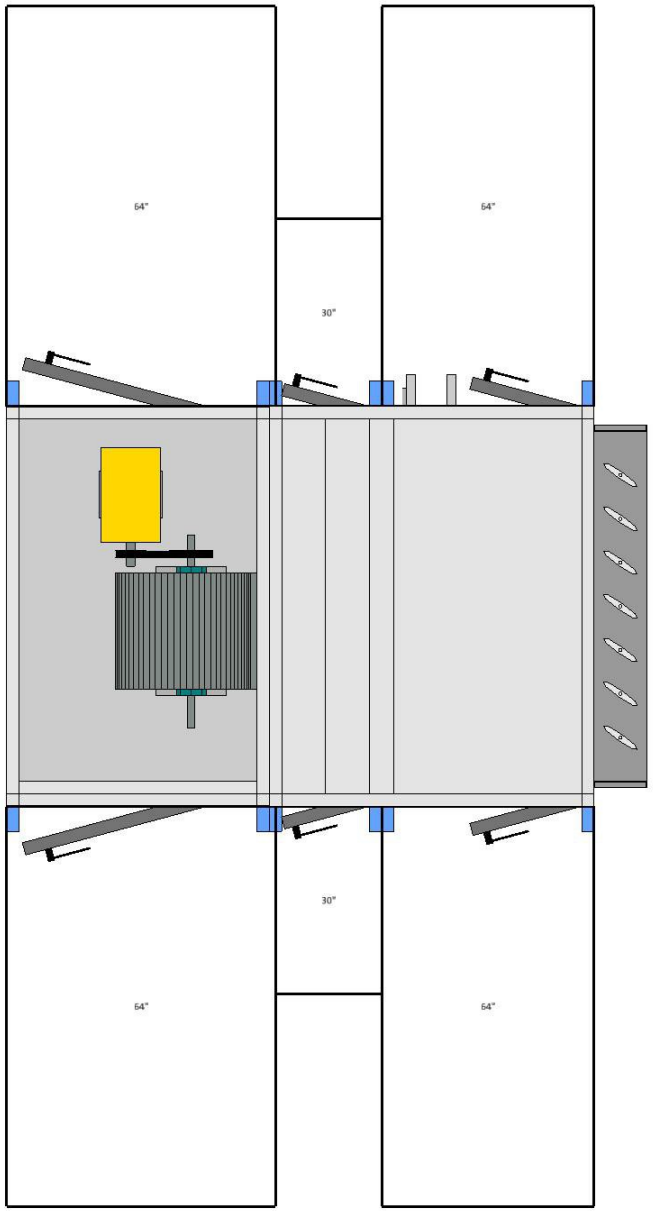

PLAN VIEW

Notes

Check local electrical component service clearance codes for specific distances.

Access is only required on one side of the unit.

Service Clearance View	Unit Tag: AHU-7 (Klenk)			Sales Office: HTS Texas		
Product: Vision Air Handler	Project Name: Klein ISD Klenk ES AHU replacements			Sales Engineer:		
Model: CAH010GMAM	Jan. 17, 2026	Ver/Rev:	Sheet: 1 of 1	Scale: NTS	Tolerance: +/-0.25"	Dwg Units: in

DAIKIN
13600 Industrial Park Blvd, Minneapolis, MN 55441
www.DaikinApplied.com Software Version: 13.91

All opening dimensions have a 1" mounting flange along the inner edge. The actual airflow area of the opening is 2" smaller in each dimension.

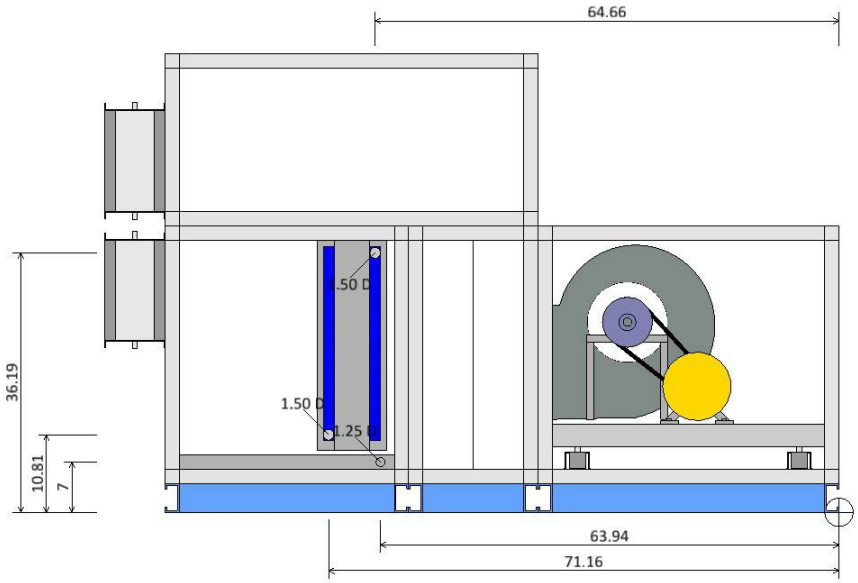

LEFT ELEVATION VIEW

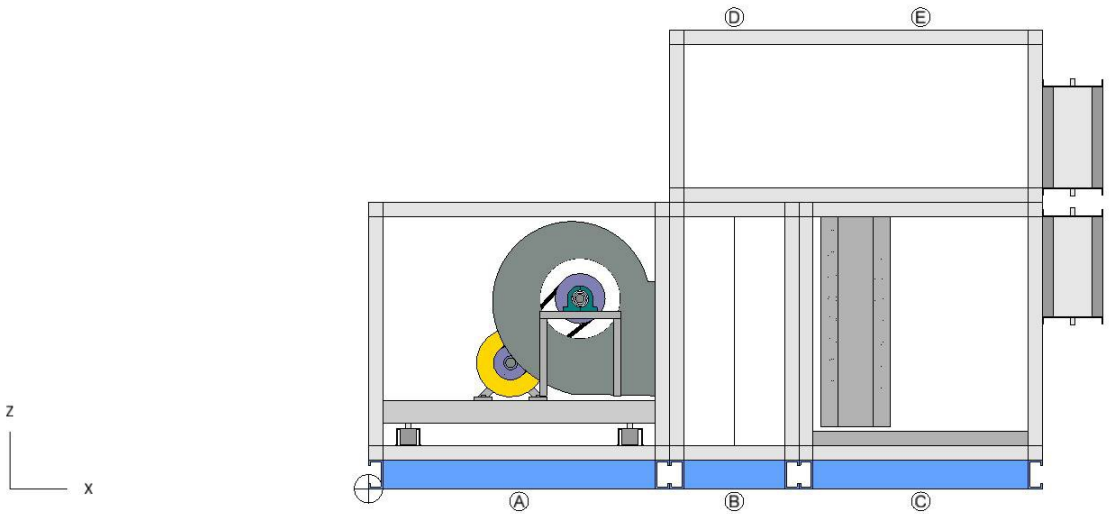

RIGHT ELEVATION VIEW

Coil and Drain Connections					
	Type	X	Y	Z	Diam
Ⓒ	Chilled Water coil Condensate drain conn: Cold water inlet: Cold water outlet:	 63.94 71.16 64.66	 66.90 71.00* 71.00*	 7.00 10.81 36.19	 1.25 1.50 1.50

Notes:
Dimensions are measured from the origin point.
* value varies +/- 1 in.

Coil and Drain Connections	Unit Tag: AHU-7 (Klenk)			Sales Office: HTS Texas		
Product: Vision Air Handler	Project Name: Klein ISD Klenk ES AHU replacements			Sales Engineer:		
Model: CAH010GMAM	Jan. 17, 2026	Ver/Rev:	Sheet: 1 of 1	Scale: NTS	Tolerance: +/-0.25"	Dwg Units: in

DAIKIN
13600 Industrial Park Blvd, Minneapolis, MN 55441
www.DaikinApplied.com Software Version: 13.91

All opening dimensions have a 1" mounting flange along the inner edge. The actual airflow area of the opening is 2" smaller in each dimension.

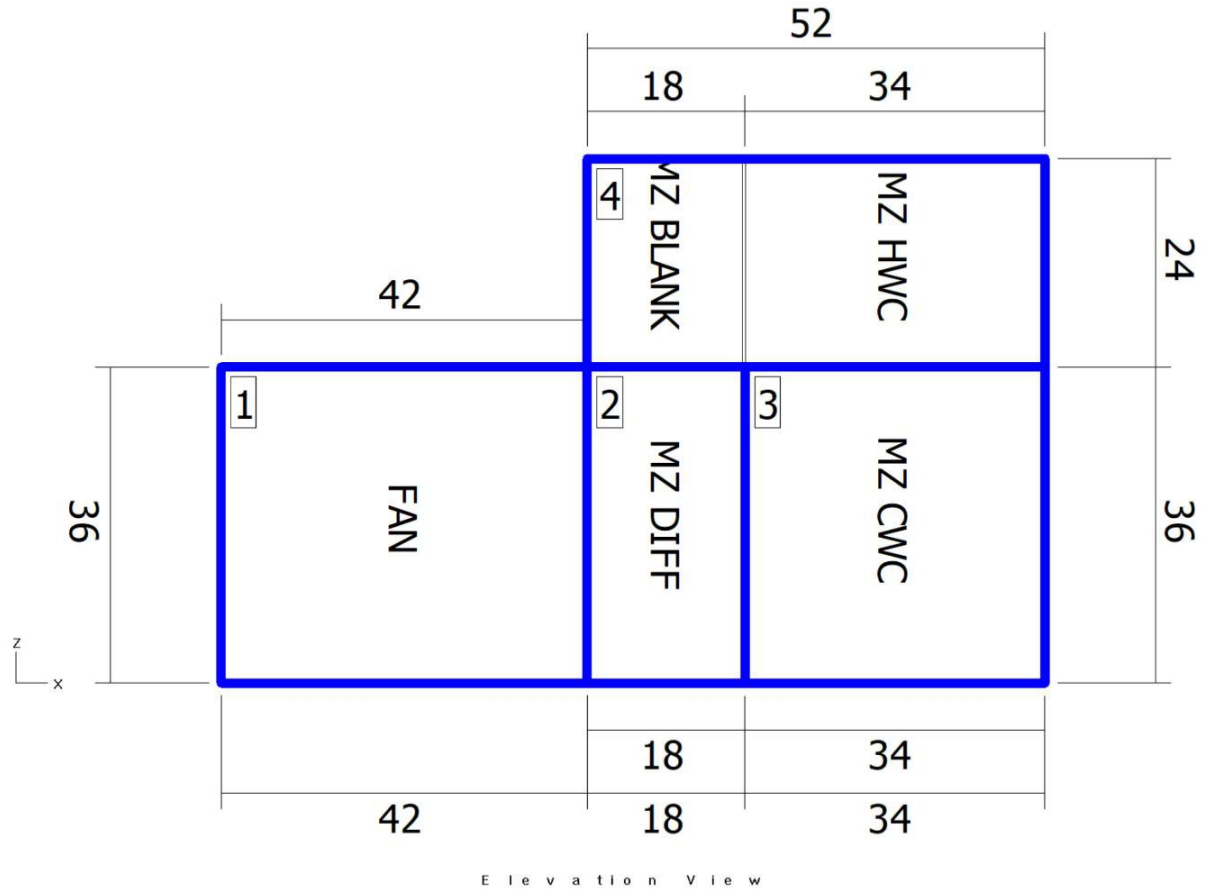

Elevation View

Shipping Sections				
Section	Weight (lb)	X	Y	Z
Section 1	861.70	42	64	36
Section 2	207.67	18	64	36
Section 3	698.21	34	64	36
Section 4	412.05	52	64	24
Total Unit	2179.63	94	64	60

Note: Base rails, curb ready base, coil connectors, drain connectors, and control boxes not included in height X, Y, Z dimensions.
Shipping section may be 2" longer in air flow direction due to internal splice joint.
Horizontal multizone section : Add 8.38" to section length if dampers are installed.

Shipping Sections	Unit Tag: AHU-7 (Klenk)			Sales Office: HTS Texas		
Product: Vision Air Handler	Project Name: Klein ISD Klenk ES AHU replacements			Sales Engineer:		
Model: CAH010GMAM	Jan. 17, 2026	Ver/Rev:	Sheet: 1 of 1	Scale: NTS	Tolerance: +/-0.25"	Dwg Units: in

DAIKIN
13600 Industrial Park Blvd, Minneapolis, MN 55441
www.DaikinApplied.com Software Version: 13.91

All opening dimensions have a 1" mounting flange along the inner edge. The actual airflow area of the opening is 2" smaller in each dimension.

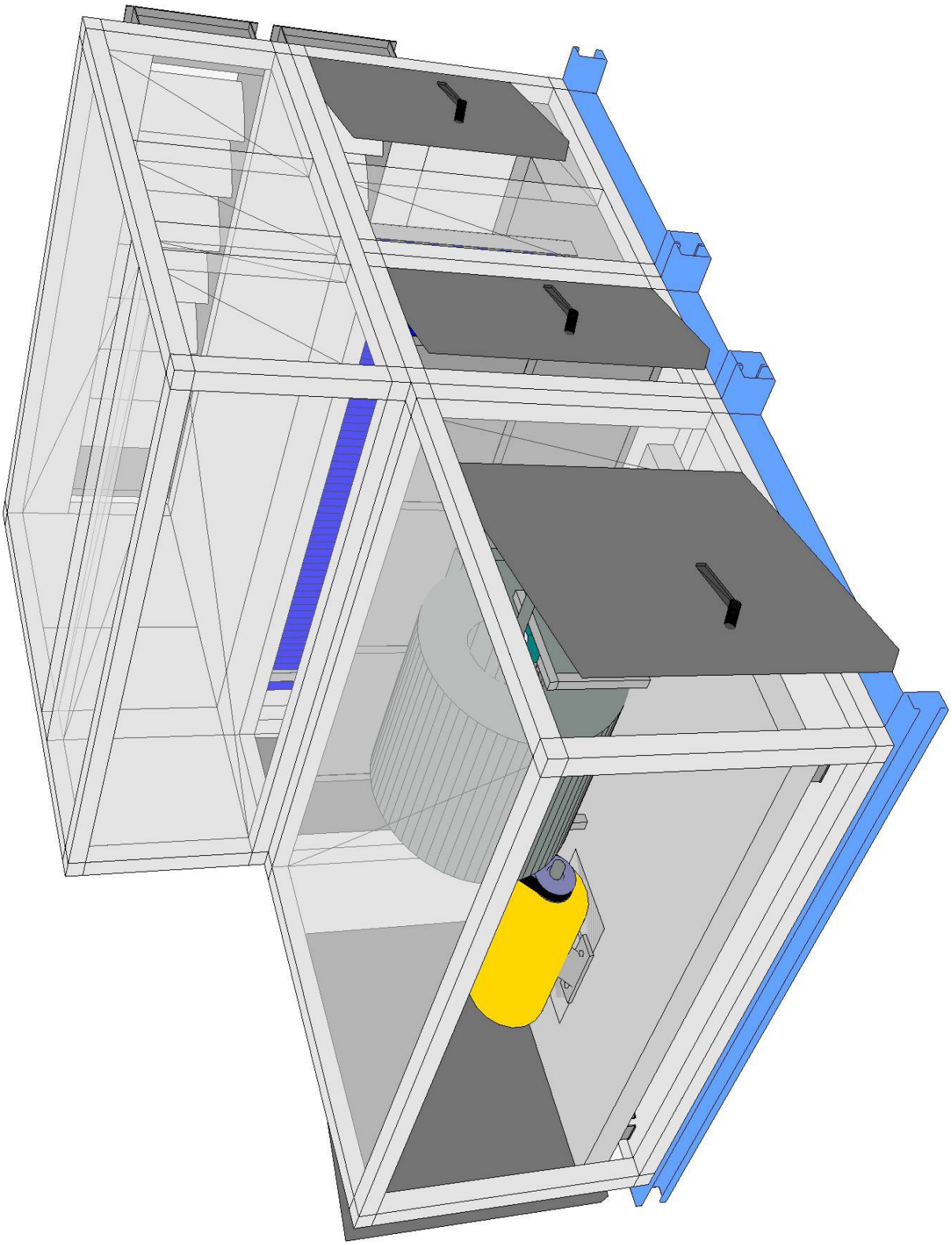

Product Drawing

Unit Tag: AHU-7 (Klenk)		Sales Office: HTS Texas	
Project Name: Klein ISD Klenk ES AHU replacement		Sales Engineer:	
Jan. 17, 2026	Ver/Rev:	Sheet: 1 of 1	Scale: NTS	Tolerance: +/-0.25"	Dwg Units: in

Product: Vision Air Handler
Model: CAH010GMAM

All opening dimensions have a 1" mounting flange along the inner edge. The actual airflow area of the opening is 2" smaller in each dimension.

DAIKIN
13600 Industrial Park Blvd, Minneapolis, MN 55441
www.DaikinApplied.com Software Version: 13.91

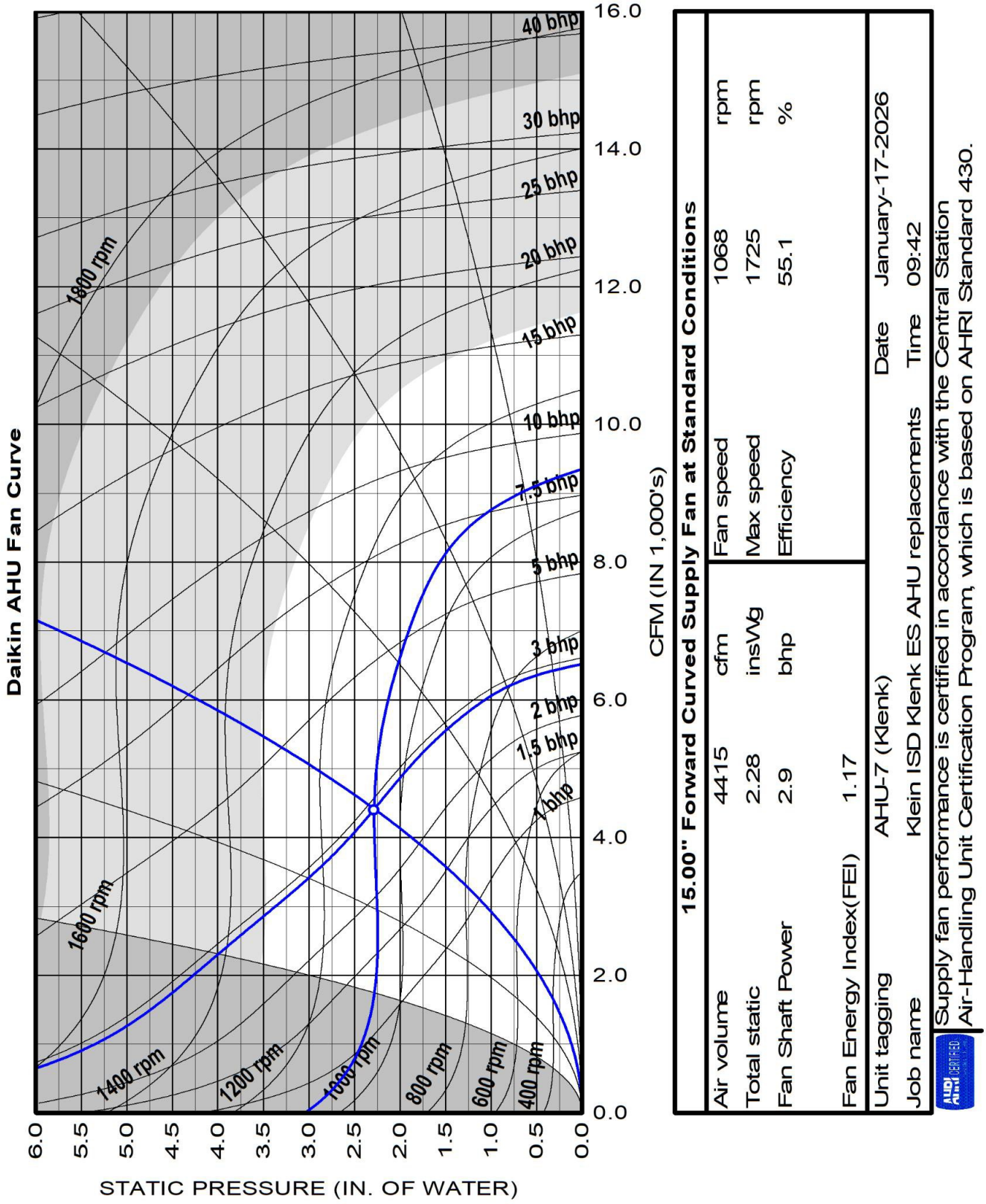
Daikin AHU Fan Curve
STATIC PRESSURE (IN. OF WATER)
CFM (IN 1,000's)
1800 rpm
1600 rpm
1400 rpm
1200 rpm
1000 rpm
800 rpm
600 rpm
400 rpm
40 bhp
30 bhp
25 bhp
20 bhp
15 bhp
10 bhp
7.5 bhp
5 bhp
3 bhp
2 bhp
1.5 bhp
1 bhp
15.00" Forward Curved Supply Fan at Standard Conditions
Air volume 4415 cfm
Total static 2.28 insWg
Fan Shaft Power 2.9 bhp
Fan Energy Index(FEI) 1.17
Fan speed 1068 rpm
Max speed 1725 rpm
Efficiency 55.1 %
Unit tagging AHU-7 (Klenk)
Date January-17-2026
Job name Klein ISD Klenk ES AHU replacements
Time 09:42
Supply fan performance is certified in accordance with the Central Station Air-Handling Unit Certification Program, which is based on AHRI Standard 430.

Job Information	Technical Data Sheet
Job Name	Klein ISD Klenk ES AHU replacements
Date	January 17 2026
Submitted By	Salas O'Brien
Software Version	13.82
Unit Tag	AHU-7 Filter

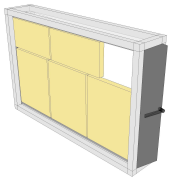

Unit Overview

Model Number	Supply					
	Air Volume cfm	Static Pressure		External Dimensions		
		External inWc	Total inWc	Height in	Width in	Length in
CAC012GVAM	4415	0.70	0.00	42*	64*	12

**Not including base rails, coil connectors, drain connectors and control boxes.*

Unit

Model Number:	CAC012GVAM		
Approval:	ETL Listed / ETL Listed to Canadian Safety Standards (ETL Label / ETLc Label)		
Outer Panel:	18 gauge G90 Galvanized Steel (unpainted)		
Liner:	24 gauge Galvanized Steel (unless noted per section)		
Insulation:	R-13 Injected Foam		
Unit Configuration:	Inline horizontal	**Drive (Handling) Location:**	Right
Base:	None	**Wall Thickness:**	2 in
Altitude:	0 ft	**Parts Warranty:**	Additional One Year, Two Year Total

Panel Filter

Component: 1 | Length: 12 in | Shipping Section: 1

Type	Efficiency	Nominal Face Velocity	Actual Face Velocity	Actual Face Area	Air Volume	Filter Loading
Pre Pleat	MERV 13	315 ft/min	336 ft/min	13.1 ft²	4415 cfm	Side

Air Pressure Drop				Number of Filters	Height	Width	Depth
Clean Air	Mean Air	Dirty Air	User Spec				
0.20 inWc	**0.60** inWc	1.00 inWc	N/A	3	24 in	20 in	2 in
				2	12 in	24 in	2 in

Door

Location	Drive Side Door Width	Opp. Drv. Side Door Width	Opening
Both sides	8 in	8 in	Outward

Unit Sound Power (dB)

Type	63 Hz	125 Hz	250 Hz	500 Hz	1000 Hz	2000 Hz	4000 Hz	8000 Hz
Radiated:	64	54	48	41	39	41	46	51
Unit Discharge:	64	54	48	41	39	41	46	51
Unit Return:	64	54	48	41	39	41	46	51

Shipping Section Details

Section	Length in	Weight lb	Corner Weights (lb)				Center of Gravity (in)		
			P1	P2	P3	P4	XX	YY	ZZ
1	12	159	40	40	40	40	6	32	21
Entire Unit	**12**	**159**	**40**	**40**	**40**	**40**	**6**	**32**	**21**

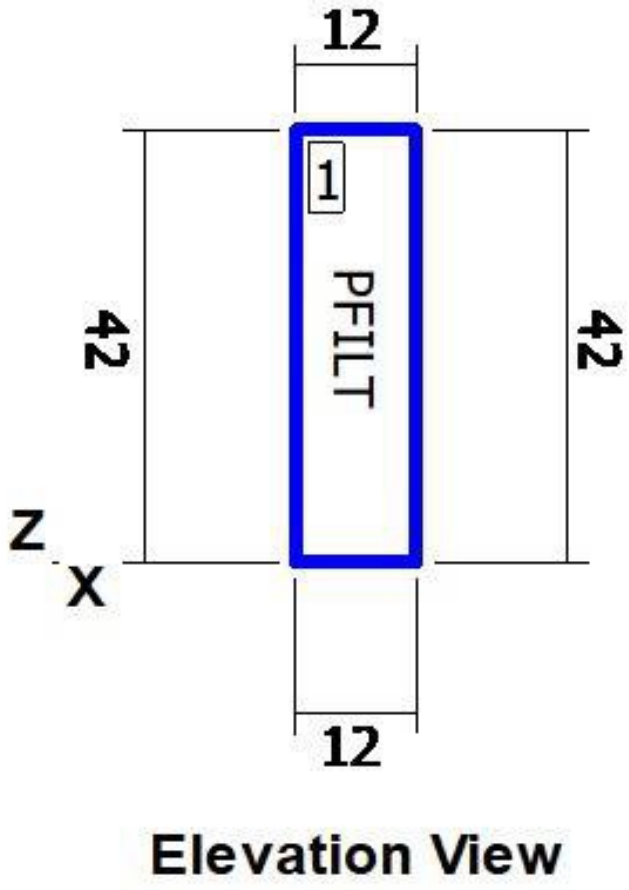

Elevation View

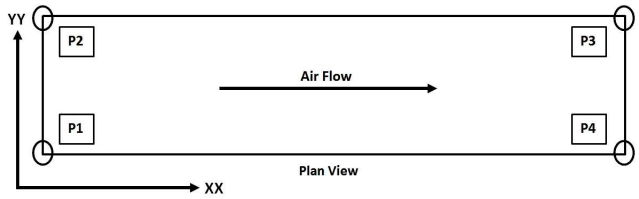

NOTE: Special components aren't included in the corner weights and center of gravity data.

Shipping Protection

None

Supply Static Pressure Drop

Component	Option	Static Pressure Drop
Panel Filter	Panel Filter	0.60 insWg
External Static	External Static	0.70 insWg
Total Supply Fan Static		

AHRI Certification

The air-handler is selected outside of the scope of AHRI Standard 430/431

Notes

Standard

1. As a standalone component, unit meets or exceeds requirements of ASHRAE 90.1 - 2007. The approving authority is responsible for compliance of multi - component building systems.

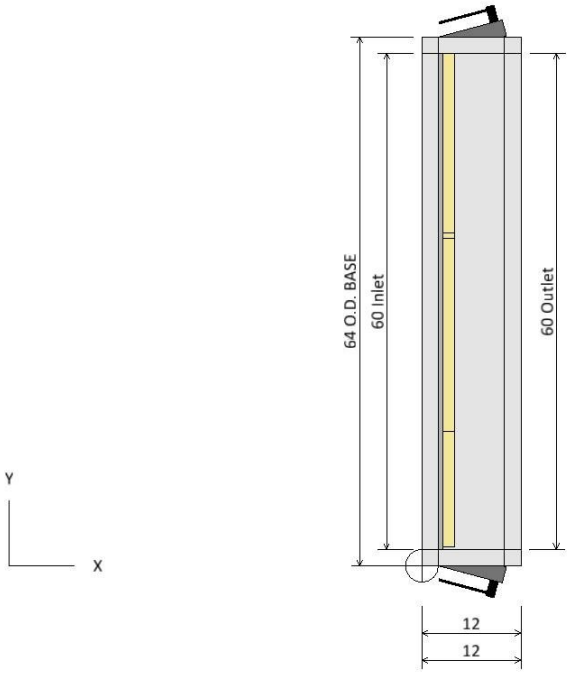

PLAN VIEW

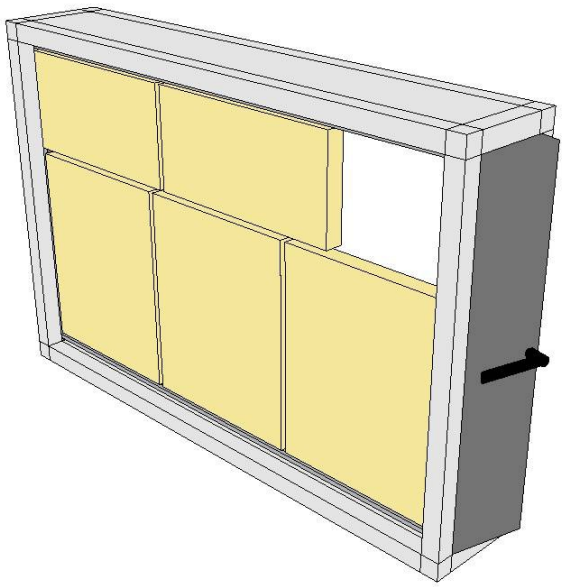

ISOMETRIC VIEW

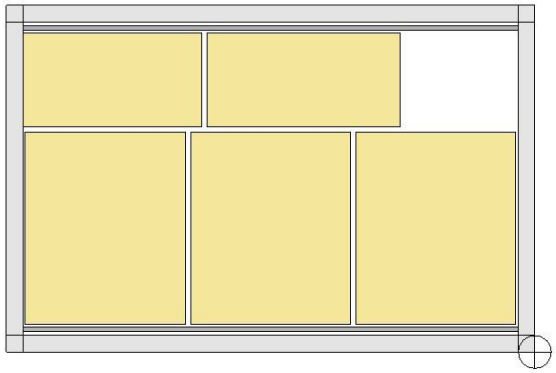

FRONT END VIEW

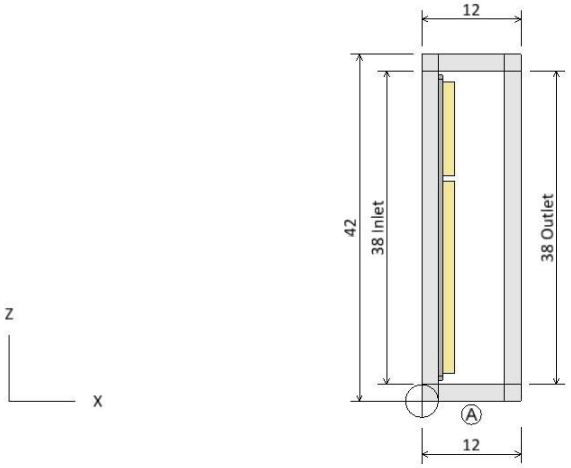

ELEVATION VIEW

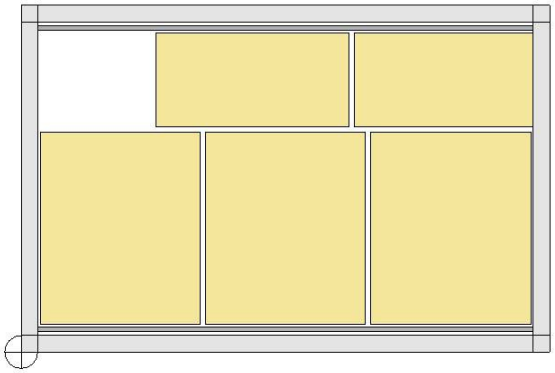

REAR END VIEW

Plan/Elevation	Unit Tag: AHU-7 Filter			Sales Office: HTS Texas		
Product: Vision Air Handler	Project Name: Klein ISD Klenk ES AHU replacements			Sales Engineer:		
Model: CAC012GVAM	Jan. 17, 2026	Ver/Rev:	Sheet: 1 of 1	Scale: NTS	Tolerance: +/-0.25"	Dwg Units: in

DAIKIN
13600 Industrial Park Blvd, Minneapolis, MN 55441
www.DaikinApplied.com Software Version: 13.82

All opening dimensions have a 1" mounting flange along the inner edge. The actual airflow area of the opening is 2" smaller in each dimension.

Component Key		
Ⓐ	Panel Filter	
	Filter Type:	PrePleat (MERV 13)
	Right Door (WxH):	8 ins x 38 ins
	Left Door (WxH):	8 ins x 38 ins

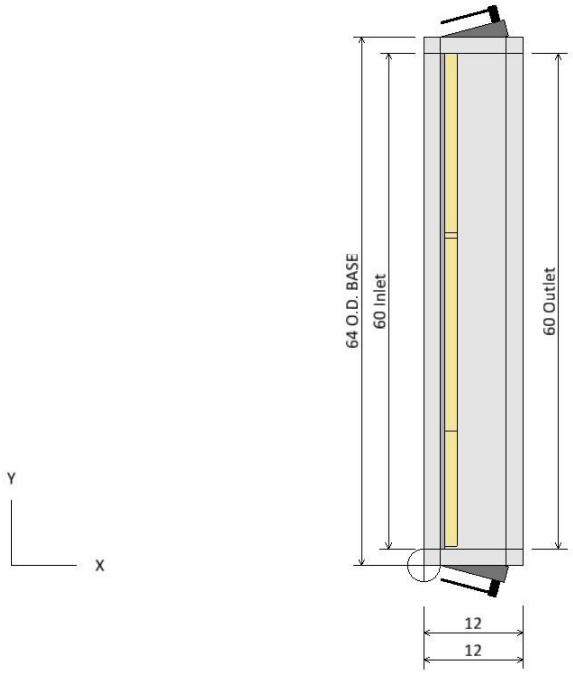

PLAN VIEW

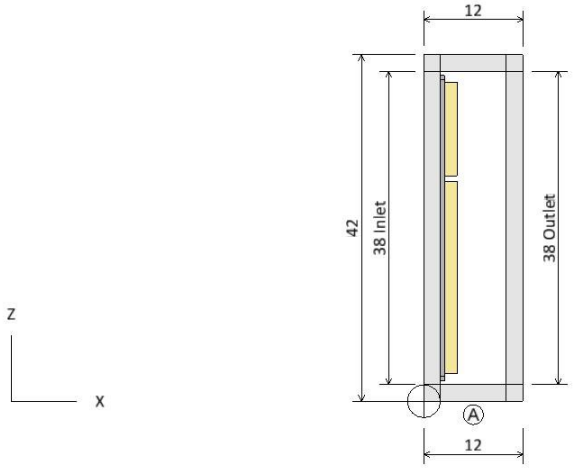

ELEVATION VIEW

Plan/Elevation - No Ends	Unit Tag: AHU-7 Filter			Sales Office: HTS Texas		
Product: Vision Air Handler	Project Name: Klein ISD Klenk ES AHU replacements			Sales Engineer:		
Model: CAC012GVAM	Jan. 17, 2026	Ver/Rev:	Sheet: 1 of 1	Scale: NTS	Tolerance: +/-0.25"	Dwg Units: in

DAIKIN
13600 Industrial Park Blvd, Minneapolis, MN 55441
www.DaikinApplied.com Software Version: 13.82

All opening dimensions have a 1" mounting flange along the inner edge. The actual airflow area of the opening is 2" smaller in each dimension.

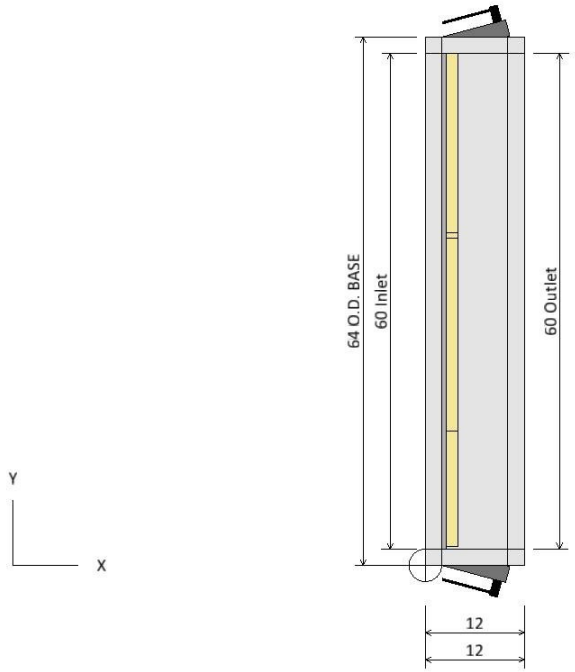

PLAN VIEW

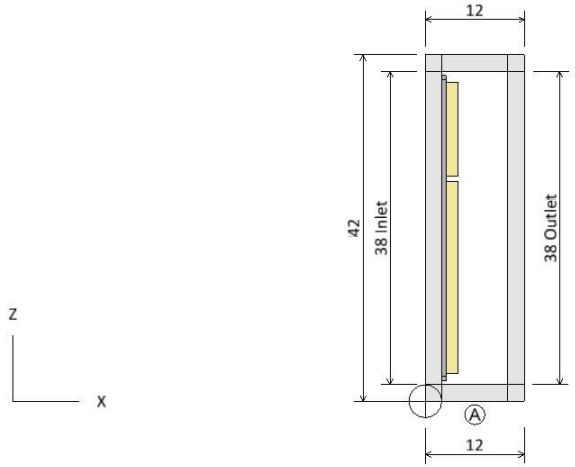

ELEVATION VIEW

Component Key

	Type	X	Y	Z	Wid	Hgt
Ⓐ	Panel Filter Opening	0.00	2.00	2.00	60.00	38.00
	Opening	12.00	2.00	2.00	60.00	38.00

Note: Dimensions are measured from the origin point.
Note: Openings with or without dampers are recessed int the unit by approximately 1.75 in.

Opening/Damper Connections	Unit Tag: AHU-7 Filter			Sales Office: HTS Texas		
Product: Vision Air Handler	Project Name: Klein ISD Klenk ES AHU replacements			Sales Engineer:		
Model: CAC012GVAM	Jan. 17, 2026	Ver/Rev:	Sheet: 1 of 1	Scale: NTS	Tolerance: +/-0.25"	Dwg Units: in

DAIKIN
13600 Industrial Park Blvd, Minneapolis, MN 55441
www.DaikinApplied.com Software Version: 13.82

All opening dimensions have a 1" mounting flange along the inner edge. The actual airflow area of the opening is 2" smaller in each dimension.

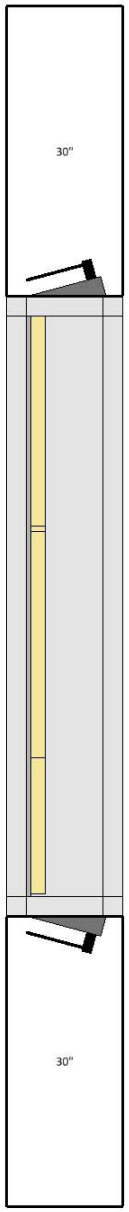

PLAN VIEW

Notes

Check local electrical component service clearance codes for specific distances.

Access is only required on one side of the unit.

Service Clearance View	Unit Tag: AHU-7 Filter			Sales Office: HTS Texas		
Product: Vision Air Handler	Project Name: Klein ISD Klenk ES AHU replacements			Sales Engineer:		
Model: CAC012GVAM	Jan. 17, 2026	Ver/Rev:	Sheet: 1 of 1	Scale: NTS	Tolerance: +/-0.25"	Dwg Units: in

DAIKIN
13600 Industrial Park Blvd, Minneapolis, MN 55441
www.DaikinApplied.com Software Version: 13.82

All opening dimensions have a 1" mounting flange along the inner edge. The actual airflow area of the opening is 2" smaller in each dimension.

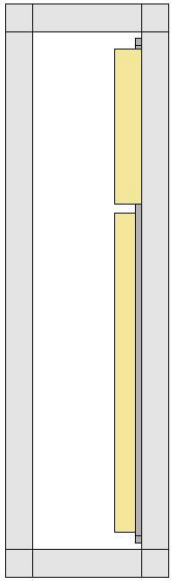

LEFT ELEVATION VIEW

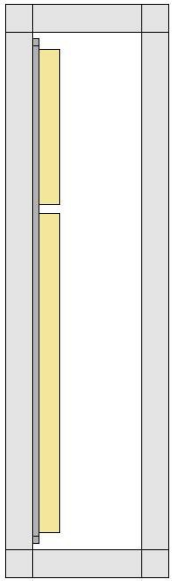

RIGHT ELEVATION VIEW

Coil and Drain Connections

Note: Dimensions are measured from the origin point.

Coil and Drain Connections	Unit Tag: AHU-7 Filter			Sales Office: HTS Texas		
Product: Vision Air Handler	Project Name: Klein ISD Klenk ES AHU replacements			Sales Engineer:		
Model: CAC012GVAM	Jan. 17, 2026	Ver/Rev:	Sheet: 1 of 1	Scale: NTS	Tolerance: +/-0.25"	Dwg Units: in

DAIKIN
13600 Industrial Park Blvd, Minneapolis, MN 55441
www.DaikinApplied.com Software Version: 13.82

All opening dimensions have a 1" mounting flange along the inner edge. The actual airflow area of the opening is 2" smaller in each dimension.

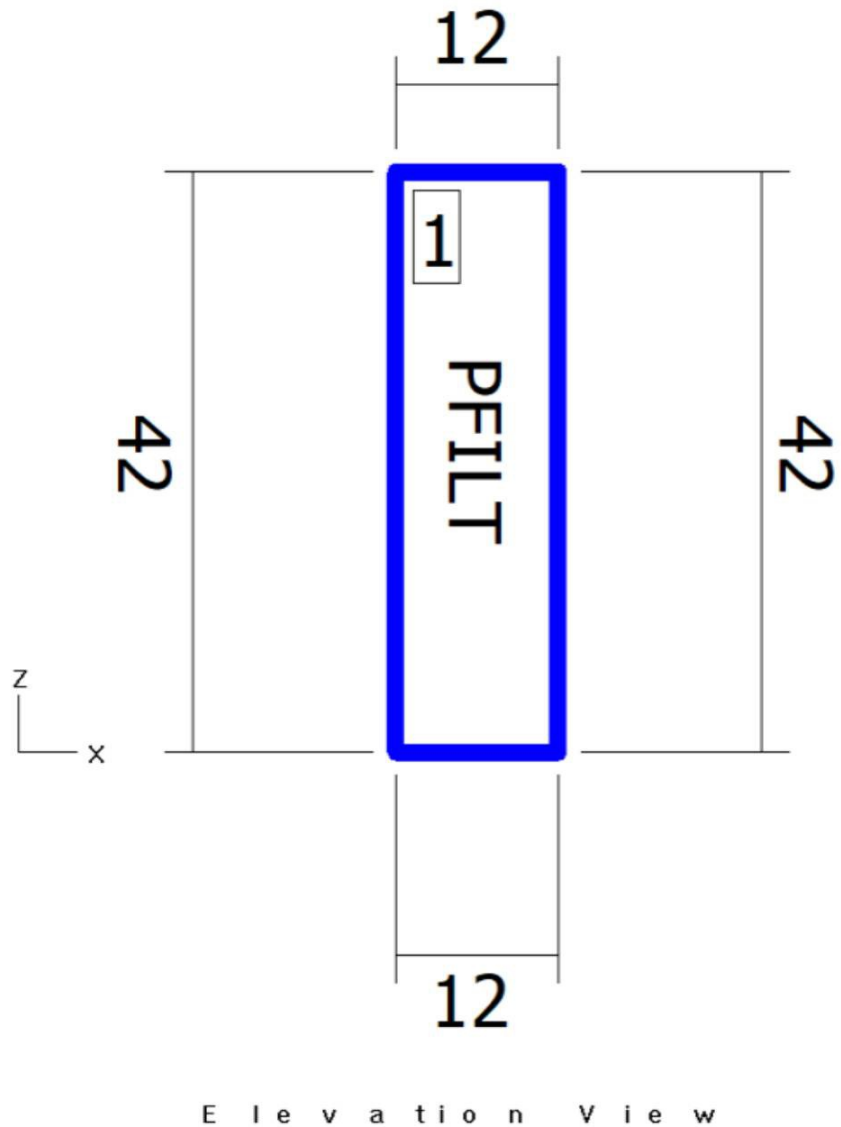

Elevation View

Shipping Sections

Section	Weight (lb)	X	Y	Z
Section 1	158.96	12	64	42
Total Unit	158.96	12	64	42

Note: Base rails, curb ready base, coil connectors, drain connectors, and control boxes not included in height X, Y, Z dimensions.
Shipping section may be 2" longer in air flow direction due to internal splice joint.

Shipping Sections	Unit Tag: AHU-7 Filter			Sales Office: HTS Texas		
Product: Vision Air Handler	Project Name: Klein ISD Klenk ES AHU replacements			Sales Engineer:		
Model: CAC012GVAM	Jan. 17, 2026	Ver/Rev:	Sheet: 1 of 1	Scale: NTS	Tolerance: +/-0.25"	Dwg Units: in

DAIKIN
13600 Industrial Park Blvd, Minneapolis, MN 55441
www.DaikinApplied.com Software Version: 13.82

All opening dimensions have a 1" mounting flange along the inner edge. The actual airflow area of the opening is 2" smaller in each dimension.

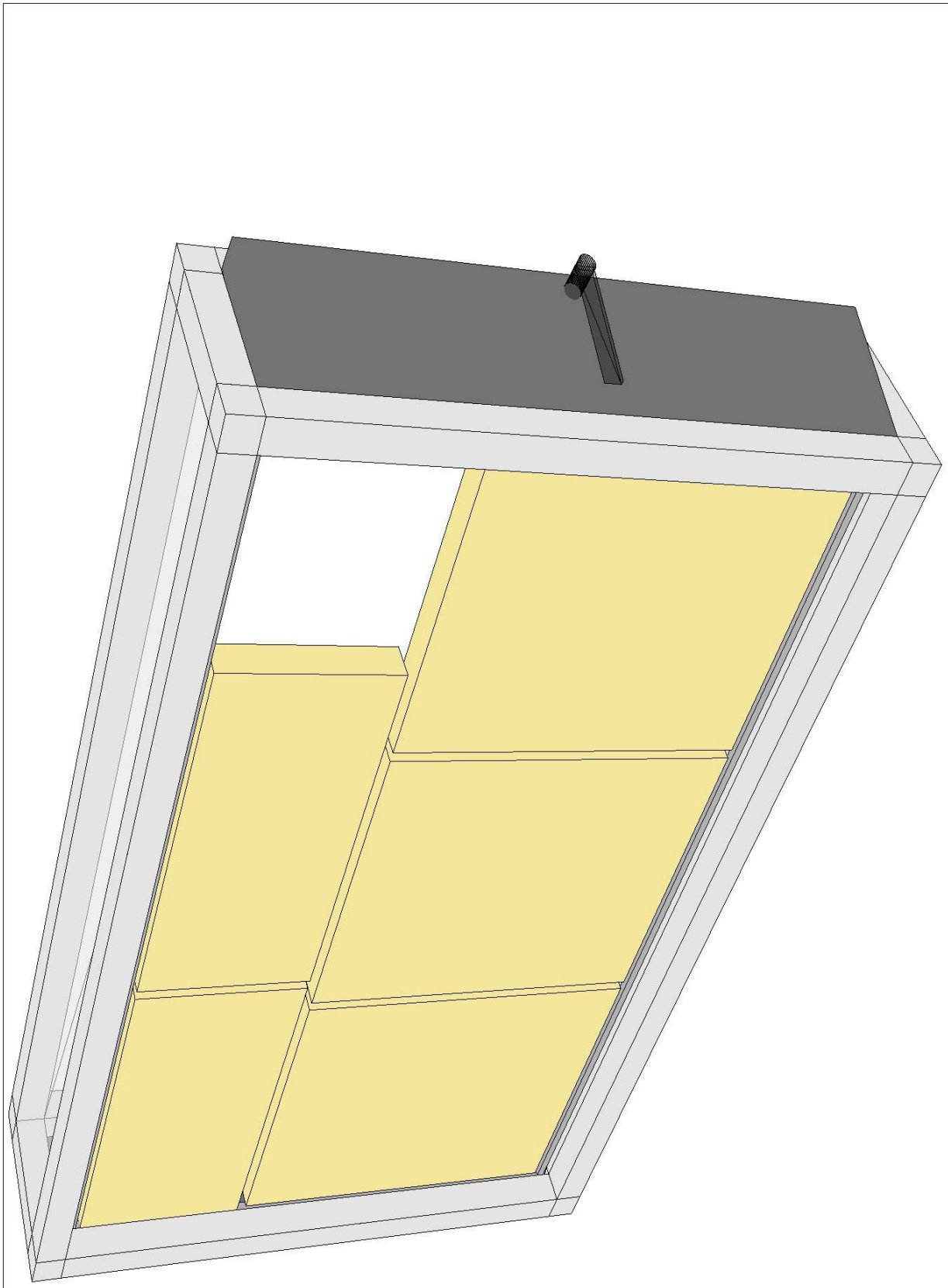

Product Drawing

Product: Vision Air Handler	Unit Tag: AHU-7 Filter	Sales Office: HTS Texas	
Model: CAC012GVAM	Project Name: Klein ISD Klenk ES AHU replacement	Sales Engineer: Chris Gates	
	Jan. 17, 2026 | Ver/Rev: | Sheet: 1 of 1 | Scale: NTS | Tolerance: +/-0.25" | Dwg Units: in		

All opening dimensions have a 1" mounting flange along the inner edge. The actual airflow area of the opening is 2" smaller in each dimension.

DAIKIN

13600 Industrial Park Blvd, Minneapolis, MN 55441
www.DaikinApplied.com Software Version: 13.82

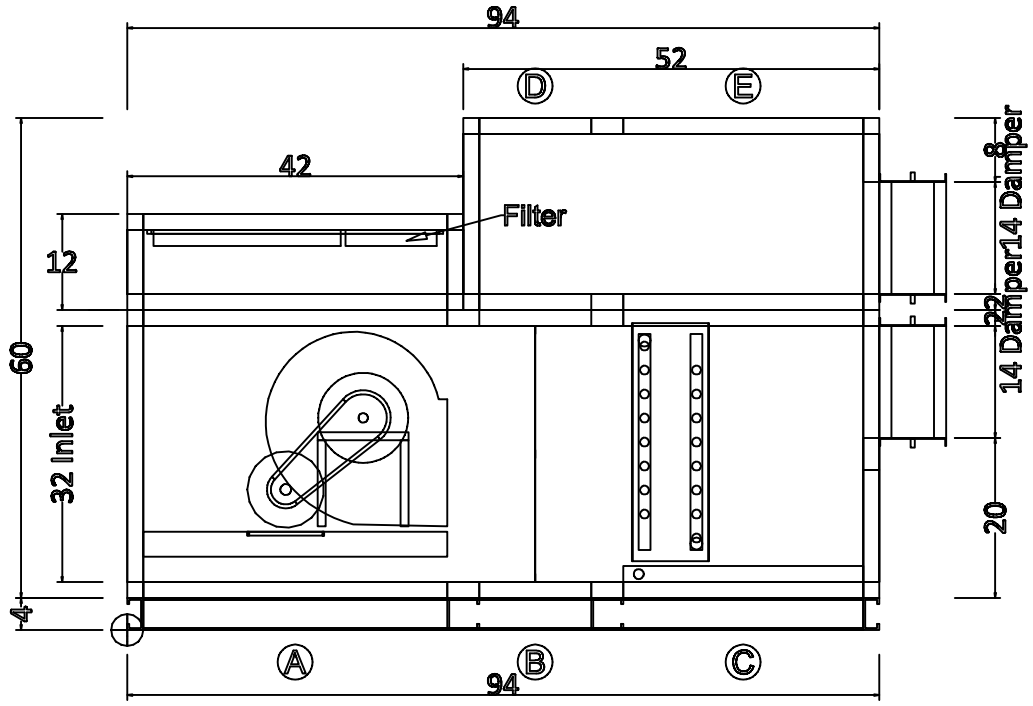

ELEVATION VIEW

Plan/Elevation - No Ends	Unit Tag: AHU-7 (Klenk) Top Filter			Sales Office: HTS Texas			DAIKIN 13600 Industrial Park Blvd, Minneapolis, MN 55441 www.DaikinApplied.com Software Version: 13.82
Product: Vision Air Handler	Project Name: Klein ISD Klenk ES AHU replacements			Sales Engineer:			
Model: CAH010GMAM	Dec. 3, 2025	Ver/Rev:	Sheet: 1 of 1	Scale: NTS	Tolerance: +/-0.25"	Dwg Units: in	

All opening dimensions have a 1" mounting flange along the inner edge. The actual airflow area of the opening is 2" smaller in each dimension.

Job Information	Technical Data Sheet
Job Name	Klein ISD Klenk ES AHU replacements
Date	January 17 2026
Submitted By	Salas O'Brien
Software Version	13.91
Unit Tag	AHU-8 (Klenk) Final

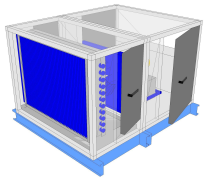

Unit Overview

Model Number	Supply					
	Air Volume cfm	Static Pressure		External Dimensions		
		External inWc	Total inWc	Height in	Width in	Length in
CAH013GDGM	5450	0.60	1.91	46*	60*	76

**Not including base rails, coil connectors, drain connectors and control boxes.*

Unit

Model Number:	CAH013GDGM		
Approval:	ETL Listed / ETL Listed to Canadian Safety Standards (ETL Label / ETLc Label)		
Outer Panel:	18 gauge G90 Galvanized Steel (unpainted)		
Liner:	24 gauge Galvanized Steel (unless noted per section)		
Insulation:	R-13 Injected Foam		
Unit Configuration:	Inline horizontal	**Drive (Handling) Location:**	Left
Base:	6" formed channel	**Wall Thickness:**	2 in
Altitude:	0 ft	**Parts Warranty:**	Additional One Year, Two Year Total

Chilled Water Coil

Component: 1 | Length: 32 in | Shipping Section: 1

Coil Model	Total Capacity	Sensible Capacity	Number of Coils	Number of Rows	Fins per Inch	Tube Diameter	Tube Spacing (Face x Row)
5WL0906B	208427 Btu/hr	148953 Btu/hr	1	6	9	0.625 in	1.50 in x 1.299 in

Coil Operating Weight	Coil Dry Weight
320 lb	233 lb

Air Volume	Air Temperature				Coil Air Pressure Drop	Finned Height	Finned Length	Face Area	Face Velocity
	Entering		Leaving						
	Dry Bulb	Wet Bulb	Dry Bulb	Wet Bulb					
5450 cfm	79.9 °F	66.6 °F	54.9 °F	54.1 °F	0.62 inWc	36 in	47 in	11.75 ft²	464 ft/min

Water						
Entering	Leaving	Flow Rate	Pressure Drop	Velocity	Fluid Volume	Fluid Weight
45.0 °F	53.5 °F	49.00 gpm	4.80 ftHd	2.90 ft/s	10.0 gal	87.00 lb

Connection [Data Per Coil]				Min. Fin Surface Temp.	Min. Tube Wall Surface Temp.	Fouling Factor
Type	Size	Location	Material			
Threaded	2.50 in	Drive side	Carbon steel	45.0 °F	45.0 °F	0.000

Material				Drain Pan	Drain Side
Fin	Tube	Header	Case		
Aluminum .0075 in	Copper .020 in	Copper	Stainless steel	Stainless steel	Drive side

AHRI 410 Certification

Certified in accordance with the AHRI Forced-Circulation Air-Cooling and Air-Heating Coils Certification Program which is based on AHRI Standard 410 within the Range of Standard Rating Conditions listed in Table 1 of the Standard. Certified units may be found in the AHRI Directory at www.ahridirectory.org

Door

Location	Drive Side Door Width	Opp. Drv. Side Door Width	Opening
Both sides	16 in	16 in	Outward

Supply Fan

Component: 2 | Length: 44 in | Shipping Section: 2

Fan Performance

Air Volume	Static Pressure			Fan Energy Index(FEI)	Total Input Power	Fan Shaft Power	Fan Wheel Speed		Outlet Velocity
	External	Total	Cabinet				Operating	Maximum	
5450 cfm	0.60 inWc	1.91 inWc	1.19 inWc	1.25	2.5 kW	2.56 BHP	1591 rpm	2674 rpm	N/A

Fan Data

Fan Type	Blade Type / Class	Nominal Fan Size	Quantity of Fans	Wheel Diameter	Material Type	Number of Blades	Discharge	Motor Location
Centrifugal - Plenum	Airfoil / 2	DDPL20	1	20.00 in	Aluminum	9	End, single opening	Behind Fan

Motor Data

Power	Electrical Supply	Speed	Efficiency	Enclosure	Frame Size	Supplier	Number of Poles	Lock Rotor Current	Full Load Current
10.0 HP	460/60/3 V/Hz/Phase	1750 rpm	Premium	TEFC	215 T frame	Generic	4	106.62 A	12.70 A

Fan Options

Shaft Grounding Kit:	Provided	**Isolator Type:**	Spring

VFD/Starter/Disconnect Data

Selection Type:	External J-Box	**Vendor:**	Factory Standard
Voltage:	460 V	**Height x Width x Depth:**	6.00 in x 6.00 in x 4.00 in
Mounting:	Door Side	**Enclosure:**	NEMA 1

Door

Location	Drive Side Door Width	Opp. Drv. Side Door Width	Opening
Both sides	28 in	30 in	Outward

Special Options

Sound Baffle	Static Pressure
(As casing details)	0.50 inWc

Unit Sound Power (dB)

Type	63 Hz	125 Hz	250 Hz	500 Hz	1000 Hz	2000 Hz	4000 Hz	8000 Hz
Radiated:	67	70	69	60	54	49	46	51
Unit Discharge:	77	70	82	76	76	77	75	64
Unit Return:	74	78	84	78	71	69	61	51

Shipping Section Details

Section	Length in	Weight lb	Corner Weights (lb)				Center of Gravity (in)		
			P1	P2	P3	P4	XX	YY	ZZ
1	32	757	219	235	159	143	13	31	24
2	44	898	234	242	215	207	21	31	22
Entire Unit	**76**	**1655**	**440**	**465**	**387**	**363**	**34**	**31**	**23**

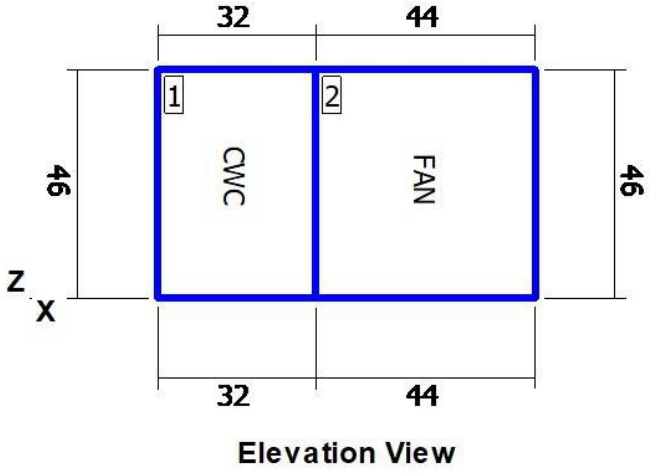

Elevation View

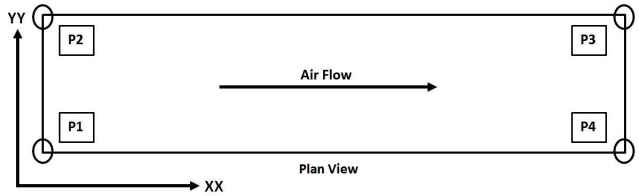

NOTE: Special components aren't included in the corner weights and center of gravity data.

NOTE: Shipping weights listed do not include weight of water (listed in coil section(s) above.

Shipping Protection

None

Supply Static Pressure Drop

Component	Option	Static Pressure Drop
Chilled Water coil	Chilled Water coil	0.62 insWg
Supply Fan	Cabinet	0.19 insWg
Supply Fan	Special	0.50 insWg
External Static	External Static	0.60 insWg
Total Supply Fan Static		1.91 insWg

Minimum Recommended Drain Pan Trap Dimensions

Shipping Section	Component	H
1	Chilled Water coil	1.74

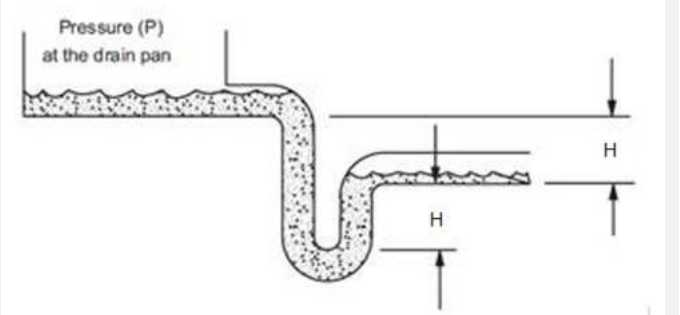

Dimensions provided as a courtesy and are recommended minimums only. Daikin is not responsible for supplying or designing drain pan traps and is not responsible for any damage caused by incorrect trap heights. The dimensions listed above should be reviewed and approved by a licensed plumbing professional.

This calculation is based on an assumption that 0.25 inches of the external static pressure is in the return duct and the remainder is in the supply duct. If actual conditions vary from this assumption then contact Applications for new trap height recommendations.

AHRI Certification



Certified by the AHRI Central Station Air-Handling Unit (AHU) Certification Program, which is based on AHRI Standard 430/431. AHRI certified units are subject to rigorous and continuous testing, have performance ratings independently measured and are third-party verified. Certified units may be found in the AHRI Directory at www.ahridirectory.org.

Notes

Standard
1. As a standalone component, unit meets or exceeds requirements of ASHRAE 90.1 - 2007. The approving authority is responsible for compliance of multi - component building systems.

51MN4W

Klein ISD Klenk ES AHU rep

127

1/17/2026

AHU-8 (Klenk) Final

Drawing

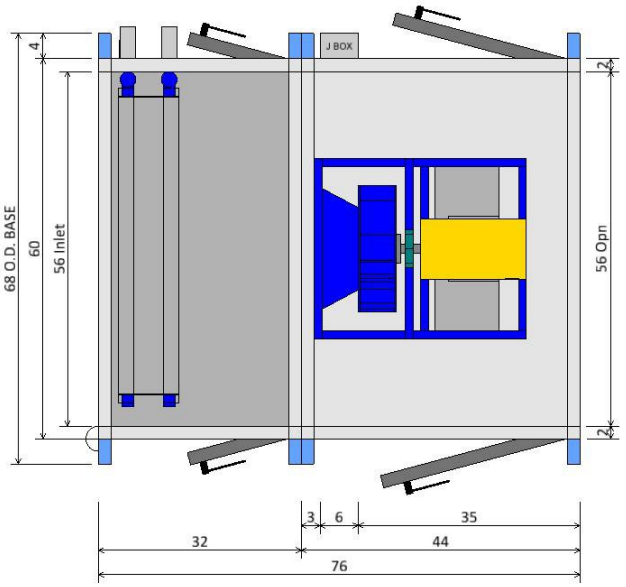

PLAN VIEW

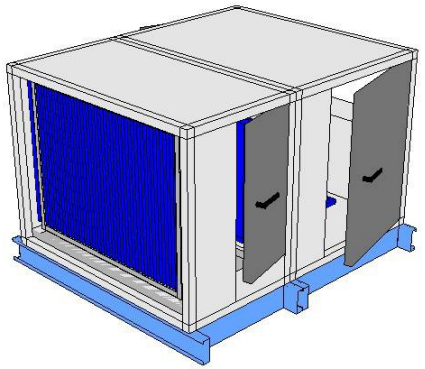

ISOMETRIC VIEW

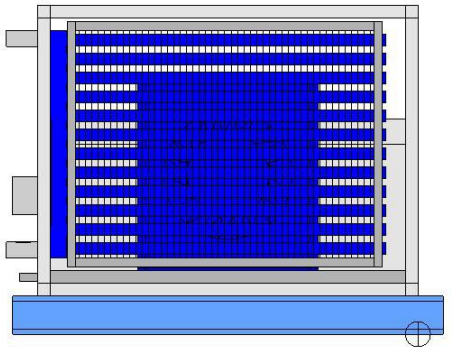

FRONT END VIEW

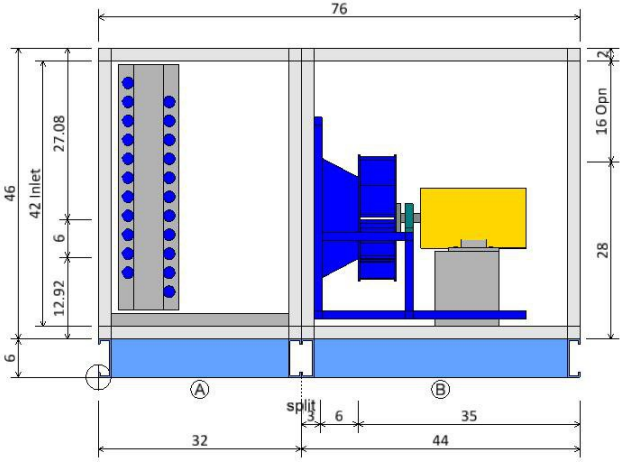

ELEVATION VIEW

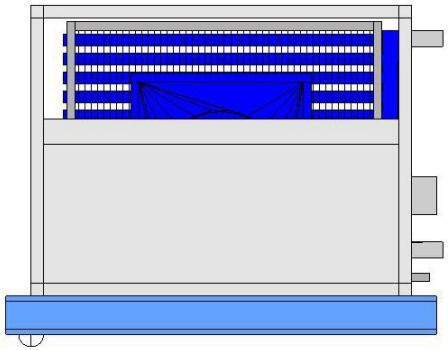

REAR END VIEW

Plan/Elevation	Unit Tag: AHU-8 (Klenk) Final			Sales Office: HTS Texas		
Product: Vision Air Handler	Project Name: Klein ISD Klenk ES AHU replacements			Sales Engineer:		
Model: CAH013GDGM	Jan. 17, 2026	Ver/Rev:	Sheet: 1 of 1	Scale: NTS	Tolerance: +/-0.25"	Dwg Units: in

DAIKIN

13600 Industrial Park Blvd, Minneapolis, MN 55441

www.DaikinApplied.com Software Version: 13.91

All opening dimensions have a 1" mounting flange along the inner edge. The actual airflow area of the opening is 2" smaller in each dimension.

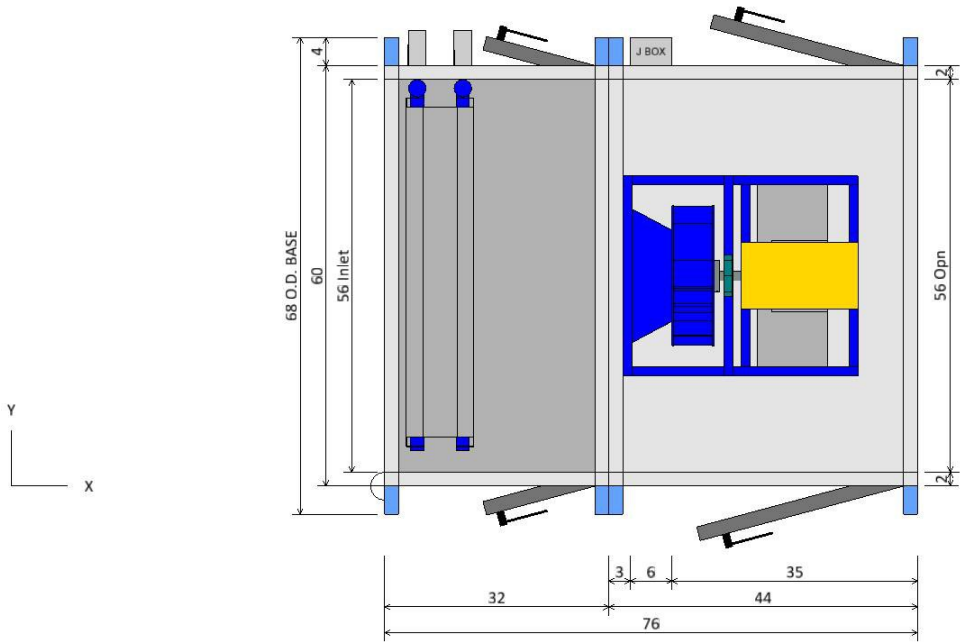

PLAN VIEW

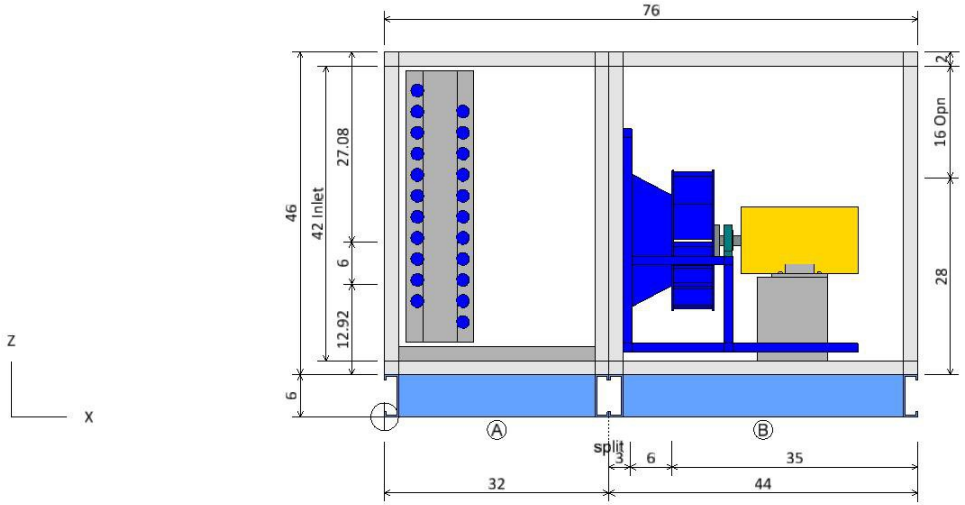

ELEVATION VIEW

Component Key		
Ⓐ	Chilled Water coil	
	Coil Model:	5WL0906B
	Total Capacity:	208427.0 Btu/hr
	Right Door (WxH):	16 ins x 36 ins
	Left Door (WxH):	16 ins x 36 ins
Ⓑ	Supply Fan	
	Fan Type:	Centrifugal - Plenum
	Fan Size (Class):	20 (2)
	Air Flowrate:	5450.0 cfm
	T.S.P:	1.9 insWg
	Motor Power:	10.0 HP
	Right Door (WxH):	30 ins x 42 ins
	Left Door (WxH):	28 ins x 42 ins

Plan/Elevation - No Ends	Unit Tag: AHU-8 (Klenk) Final			Sales Office: HTS Texas		
Product: Vision Air Handler	Project Name: Klein ISD Klenk ES AHU replacements			Sales Engineer:		
Model: CAH013GDGM	Jan. 17, 2026	Ver/Rev:	Sheet: 1 of 1	Scale: NTS	Tolerance: +/-0.25"	Dwg Units: in

DAIKIN
13600 Industrial Park Blvd, Minneapolis, MN 55441
www.DaikinApplied.com Software Version: 13.91

All opening dimensions have a 1" mounting flange along the inner edge. The actual airflow area of the opening is 2" smaller in each dimension.

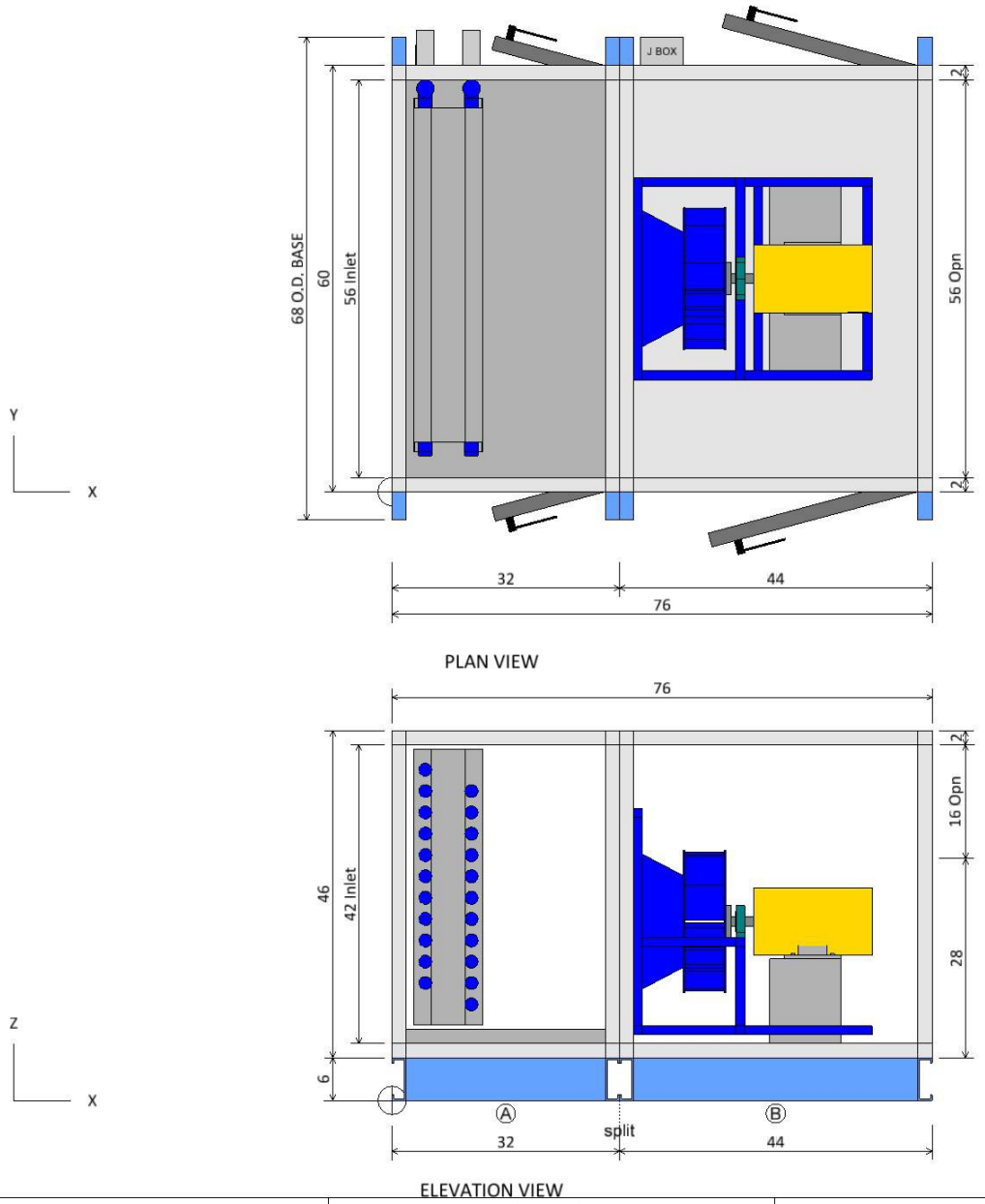

Component Key

	Type	X	Y	Z	Wid	Hgt
Ⓐ	Chilled Water coil Opening	0.00	2.00	8.00	56.00	42.00
Ⓑ	Supply Fan Fan Discharge	76.00	2.00	34.00	56.00	16.00

Note: Dimensions are measured from the origin point.
Note: Openings with or without dampers are recessed into the unit by approximately 1.75 in.

Opening/Damper Connections	Unit Tag: AHU-8 (Klenk) Final			Sales Office: HTS Texas		
Product: Vision Air Handler	Project Name: Klein ISD Klenk ES AHU replacements			Sales Engineer:		
Model: CAH013GDGM	Jan. 17, 2026	Ver/Rev:	Sheet: 1 of 1	Scale: NTS	Tolerance: +/-0.25"	Dwg Units: in

DAIKIN
13600 Industrial Park Blvd, Minneapolis, MN 55441
www.DaikinApplied.com Software Version: 13.91

All opening dimensions have a 1" mounting flange along the inner edge. The actual airflow area of the opening is 2" smaller in each dimension.

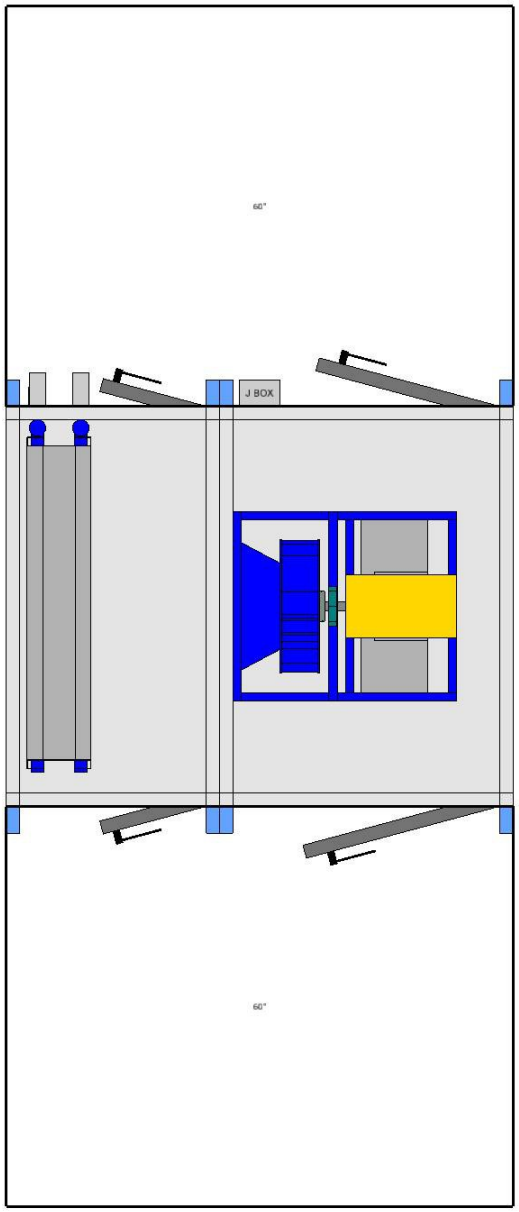

PLAN VIEW

Notes
Check local electrical component service clearance codes for specific distances. Access is only required on one side of the unit.

Service Clearance View	Unit Tag: AHU-8 (Klenk) Final			Sales Office: HTS Texas			DAIKIN
Product: Vision Air Handler	Project Name: Klein ISD Klenk ES AHU replacements			Sales Engineer:			13600 Industrial Park Blvd, Minneapolis, MN 55441
Model: CAH013GDGM	Jan. 17, 2026	Ver/Rev:	Sheet: 1 of 1	Scale: NTS	Tolerance: +/-0.25"	Dwg Units: in	www.DaikinApplied.com Software Version: 13.91

All opening dimensions have a 1" mounting flange along the inner edge. The actual airflow area of the opening is 2" smaller in each dimension.

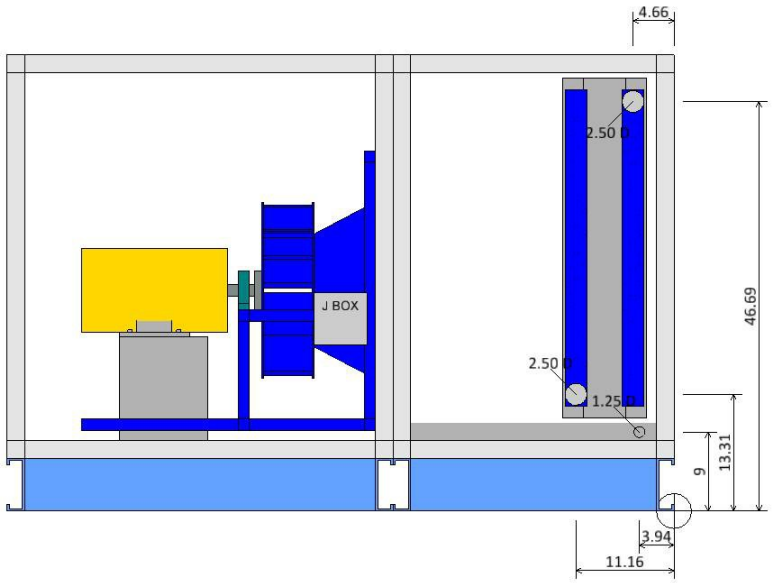

LEFT ELEVATION VIEW

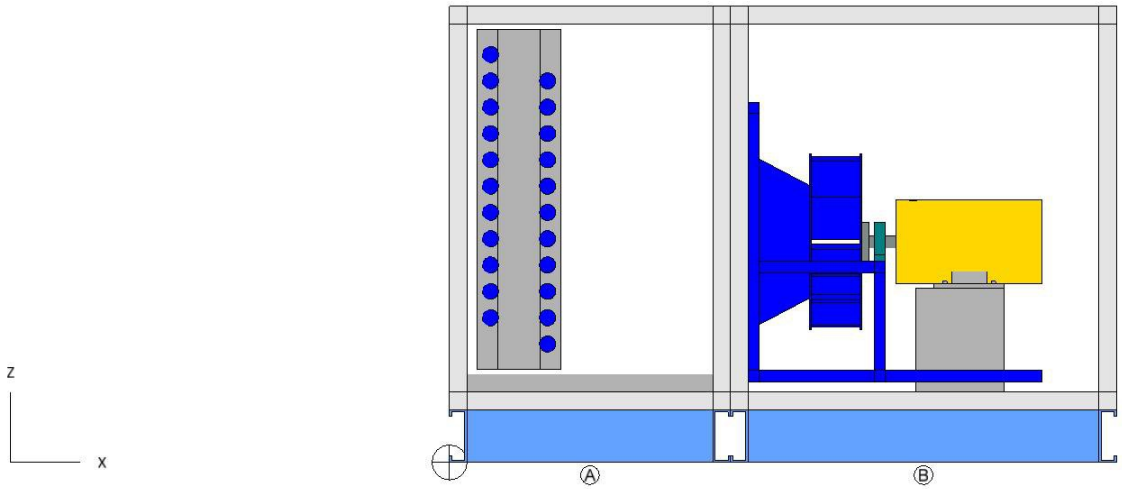

RIGHT ELEVATION VIEW

Coil and Drain Connections

	Type	X	Y	Z	Diam
Ⓐ	Chilled Water coil Condensate drain conn:	3.94	62.90	9.00	1.25
	Cold water inlet:	11.16	67.00*	13.31	2.50
	Cold water outlet:	4.66	67.00*	46.69	2.50

Notes:
Dimensions are measured from the origin point.
* value varies +/- 1 in.

Coil and Drain Connections	Unit Tag: AHU-8 (Klenk) Final			Sales Office: HTS Texas		
Product: Vision Air Handler	Project Name: Klein ISD Klenk ES AHU replacements			Sales Engineer:		
Model: CAH013GDGM	Jan. 17, 2026	Ver/Rev:	Sheet: 1 of 1	Scale: NTS	Tolerance: +/-0.25"	Dwg Units: in

DAIKIN
13600 Industrial Park Blvd, Minneapolis, MN 55441
www.DaikinApplied.com Software Version: 13.91

All opening dimensions have a 1" mounting flange along the inner edge. The actual airflow area of the opening is 2" smaller in each dimension.

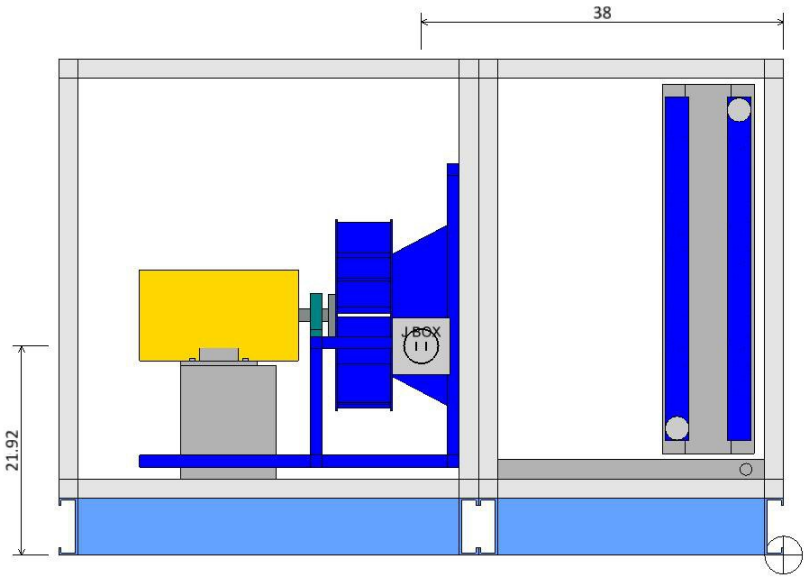

LEFT ELEVATION VIEW

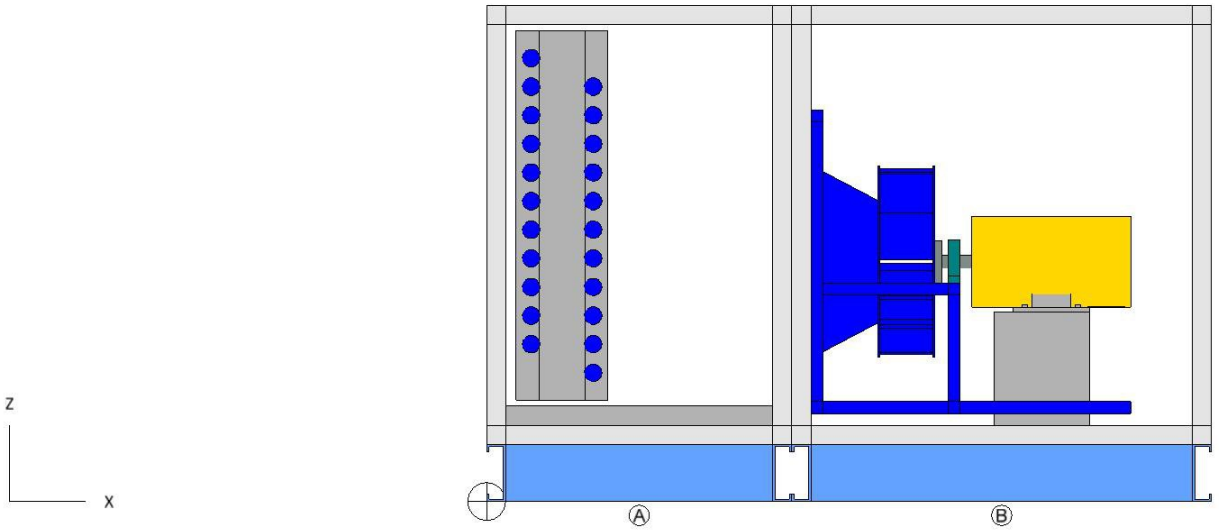

RIGHT ELEVATION VIEW

Component Key

	Type	X	Y	Z	Volts	Phase
Ⓑ	Supply Fan Fan	38.00	60.00	21.92	460	3

Note: Dimensions are measured from the origin point.

Electrical Connections	Unit Tag: AHU-8 (Klenk) Final			Sales Office: HTS Texas		
Product: Vision Air Handler	Project Name: Klein ISD Klenk ES AHU replacements			Sales Engineer:		
Model: CAH013GDGM	Jan. 17, 2026	Ver/Rev:	Sheet: 1 of 1	Scale: NTS	Tolerance: +/-0.25"	Dwg Units: in

DAIKIN
13600 Industrial Park Blvd, Minneapolis, MN 55441
www.DaikinApplied.com Software Version: 13.91

All opening dimensions have a 1" mounting flange along the inner edge. The actual airflow area of the opening is 2" smaller in each dimension.

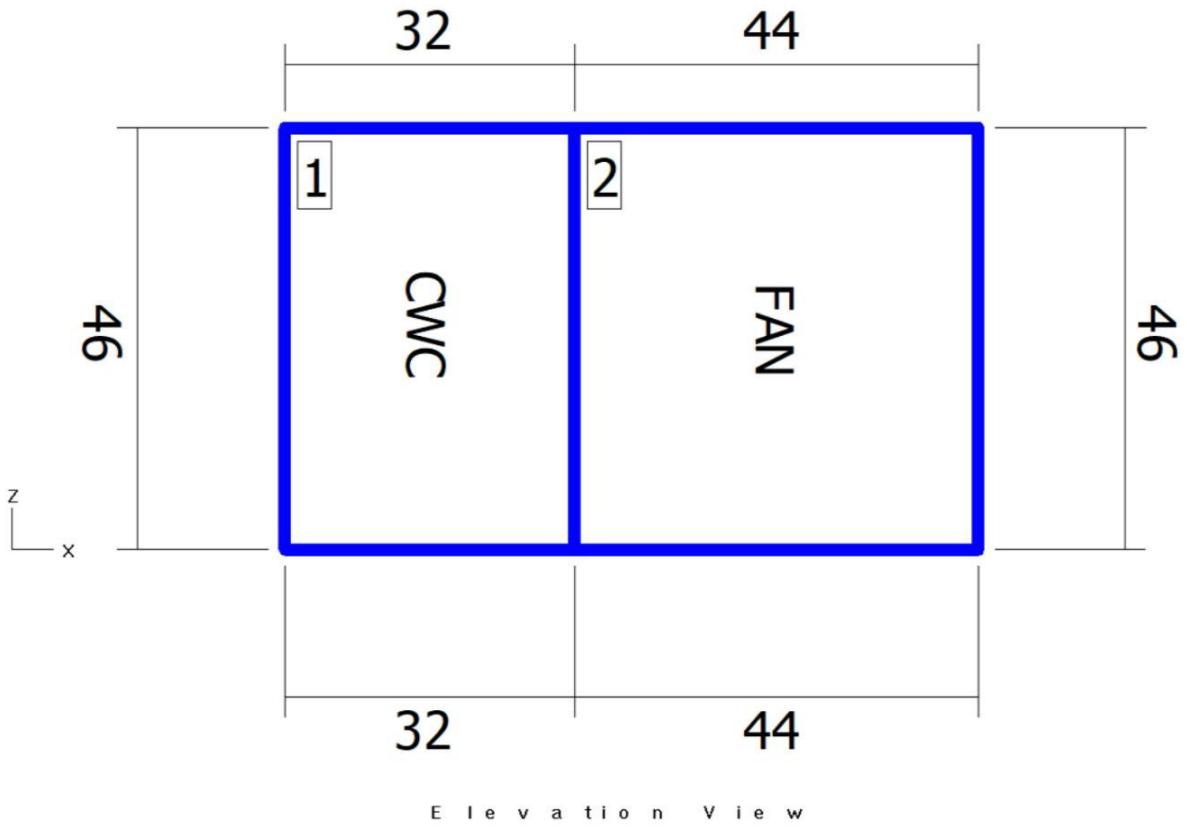

Elevation View

Shipping Sections

Section	Weight (lb)	X	Y	Z
Section 1	756.60	32	60	46
Section 2	898.29	44	60	46
Total Unit	1654.89	76	60	46

Note: Base rails, curb ready base, coil connectors, drain connectors, and control boxes not included in height X, Y, Z dimensions. Shipping section may be 2" longer in air flow direction due to internal splice joint.

Shipping Sections	Unit Tag: AHU-8 (Klenk) Final			Sales Office: HTS Texas		
Product: Vision Air Handler	Project Name: Klein ISD Klenk ES AHU replacements			Sales Engineer:		
Model: CAH013GDGM	Jan. 17, 2026	Ver/Rev:	Sheet: 1 of 1	Scale: NTS	Tolerance: +/-0.25"	Dwg Units: in

DAIKIN
13600 Industrial Park Blvd, Minneapolis, MN 55441
www.DaikinApplied.com Software Version: 13.91

All opening dimensions have a 1" mounting flange along the inner edge. The actual airflow area of the opening is 2" smaller in each dimension.

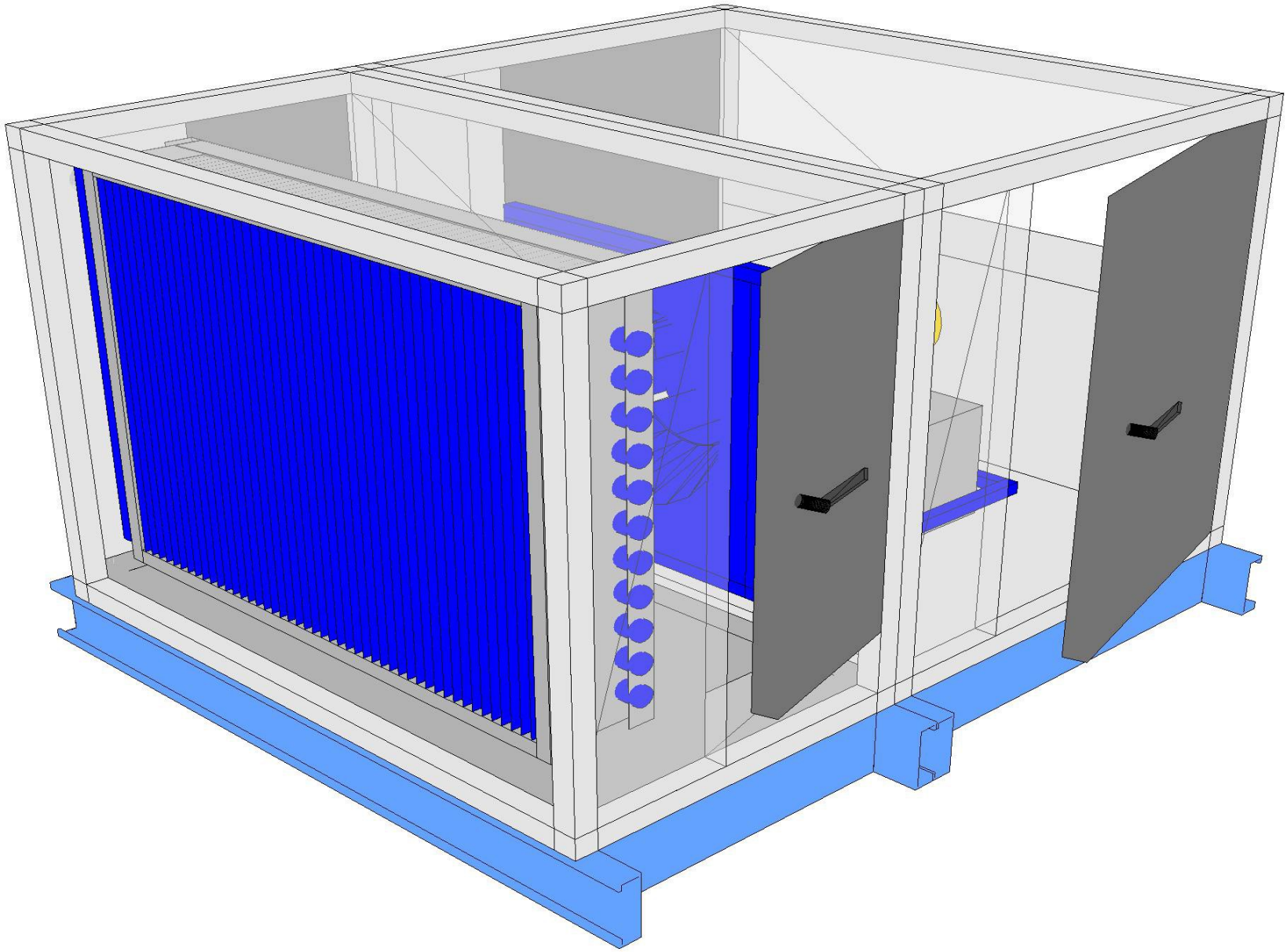

Product Drawing	Unit Tag: AHU-8 (Klenk) Final			Sales Office: HTS Texas			DAIKIN
Product: Vision Air Handler	Project Name: Klein ISD Klenk ES AHU replacements			Sales Engineer:			13600 Industrial Park Blvd, Minneapolis, MN 55441
Model: CAH013GDGM	Jan. 17, 2026	Ver/Rev:	Sheet: 1 of 1	Scale: NTS	Tolerance: +/-0.25"	Dwg Units: in	www.DaikinApplied.com Software Version: 13.91

All opening dimensions have a 1" mounting flange along the inner edge. The actual airflow area of the opening is 2" smaller in each dimension.

Daikin AHU Fan Curve

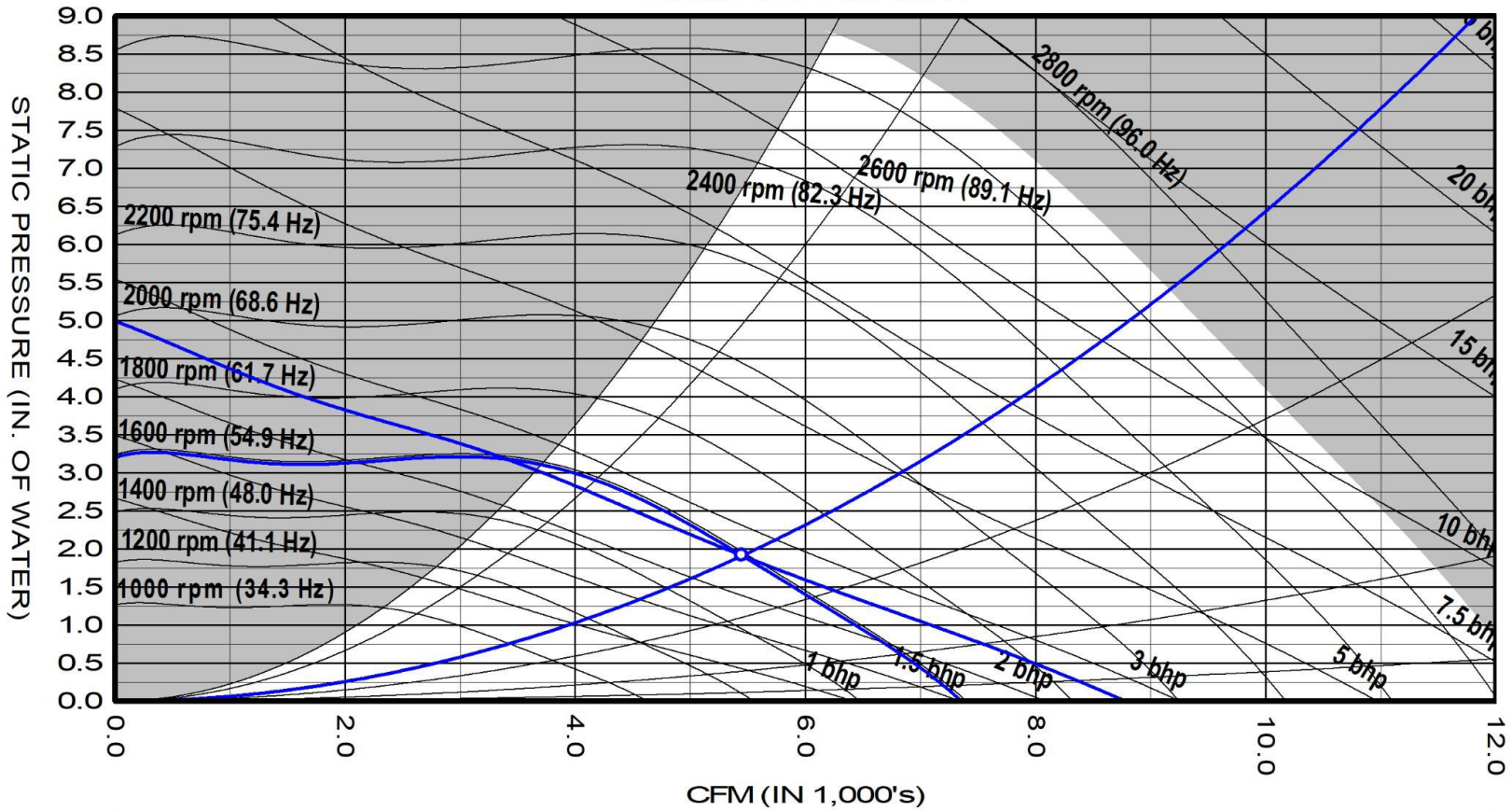

AF 20 DD PLENUM 9BL (100% Width) 1x1 Supply Fan at Standard Conditions					
Air volume	5450	cfm	Fan speed	1591	rpm
Total static	1.91	insWg	Max speed	2674	rpm
Fan Shaft Power	2.6	bhp	Efficiency	63.9	%
Approx VFD Setting	54.5	Hz	Motor Speed	1750	rpm
Fan Energy Index(FEI)	1.25				
Unit tagging	AHU-8 (Klenk) Final		Date	January-17-2026	
Job name	Klein ISD Klenk ES AHU replacements		Time	09:42	

AHRI CERTIFIED

Supply fan performance is certified in accordance with the Central Station Air-Handling Unit Certification Program, which is based on AHRI Standard 430.

Job Information	Technical Data Sheet
Job Name	Klein ISD Klenk ES AHU replacements
Date	January 17 2026
Submitted By	Salas O'Brien
Software Version	13.82
Unit Tag	AHU-9 (Klenk)

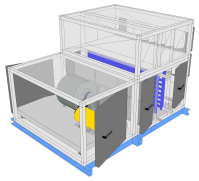

Unit Overview

Model Number	Supply					
	Air Volume cfm	Static Pressure		External Dimensions		
		External inWc	Total inWc	Height in	Width in	Length in
CAH010GMAM	4470	0.70	2.09	36*	66*	92

**Not including base rails, coil connectors, drain connectors and control boxes.*

Unit

Model Number:	CAH010GMAM		
Approval:	ETL Listed / ETL Listed to Canadian Safety Standards (ETL Label / ETLc Label)		
Outer Panel:	18 gauge G90 Galvanized Steel (unpainted)		
Liner:	24 gauge Galvanized Steel (unless noted per section)		
Insulation:	R-13 Injected Foam		
Sound Baffles:	Included in Fan, Plenum, Access and Manual section (unless noted per section)		
Unit Configuration:	Multizone	**Drive (Handling) Location:**	Right
Base:	4" formed channel	**Wall Thickness:**	2 in
Altitude:	0 ft	**Parts Warranty:**	Additional One Year, Two Year Total

Supply Fan	Component: 1	Length: 40 in	Shipping Section: 1

Fan Performance

Air Volume	Static Pressure			Fan Energy Index(FEI)	Total Input Power	Fan Shaft Power	Fan Wheel Speed		Outlet Velocity
	External	Total	Cabinet				Operating	Maximum	
4470 cfm	0.70 inWc	2.09 inWc	0.62 inWc	0.92	3.0 kW	3.48 BHP	1329 rpm	2091 rpm	3041 ft/min

Fan Data

Fan Type	Blade Type / Class	Quantity of Fans	Wheel Diameter	Number of Blades	Discharge	Motor Location
Centrifugal DWDI	Forward Curved / 2	1	12.62 in	N/A	Bottom horizontal	To Side of Fan

Motor Data

Power	Electrical Supply	Speed	Efficiency	Enclosure	Frame Size	Supplier	Number of Poles	Lock Rotor Current	Full Load Current
7.5 HP	460/60/3 V/Hz/Phase	1750 rpm	Premium	TEFC	213 T frame	Generic	4	70.56 A	9.50 A

Fan Options

Shaft Grounding Kit:	Provided	Isolator Type:	Spring

Drive Package Data*

Fan Sheave	Motor Sheave	Belt	Number of Belts	Actual Drive S.F.	Bearing Type
2BK52H	2BK36H	BX32	2	1.11	Standard - L50 (200K)

**Daikin Applied reserves the right to provide a different but equivalent drive package*

Door

Location	Drive Side Door Width	Opp. Drv. Side Door Width	Opening
Both sides	30 in	30 in	Outward

Special Options

Sound Baffle	Static Pressure
Sound baffle included	0.62 inWc

Two Deck Multizone	Component: 2	Length: 52 in	Shipping Section: 2 & 3

Discharge Location	Number of Zones	Multizone APD*	Damper Type	Actuation
Horizontal / Horizontal	7	0.77 inWc	Low leak / Low leak	None - damper mechanically linked

Note : includes coil & balance plate & diffuser

Note : Cabinet height for multizone extends 24 inches above 'External cabinet height' referenced above.
The damper assembly will add 8.38 inches to the cabinet length for horizontal discharge and 8.38 inches to the height for vertical discharge.

Cold Deck Coil

Coil Model	Total Capacity	Sensible Capacity	Number of Coils	Number of Rows	Fins per Inch	Tube Diameter	Tube Spacing (Face x Row)
5WL0806B	147987 Btu/hr	112218 Btu/hr	1	6	8	0.625 in	1.50 in X 1.299 in

Coil Operating Weight	Coil Dry Weight
260 lb	188 lb

Air Volume	Air Temperature				Coil Air Pressure Drop	Finned Height	Finned Length	Face Area	Face Velocity
	Entering		Leaving						
	Dry Bulb	Wet Bulb	Dry Bulb	Wet Bulb					
4470 cfm	77.7 °F	64.8 °F	54.7 °F	53.7 °F	0.55 inWc	27 in	53 in	9.94 ft²	450 ft/min

Water

Entering	Leaving	Flow Rate	Pressure Drop	Velocity	Fluid Volume	Fluid Weight
45.0 °F	53.2 °F	35.90 gpm	4.80 ftHd	2.90 ft/s	8.0 gal	72.00 lb

Connection [Data Per Coil]				Min. Fin Surface Temp.	Min. Tube Wall Surface Temp.	Fouling Factor
Type	Size	Location	Material			
Threaded	2.00 in	Drive side	Carbon steel	45.0 °F	45.0 °F	0.000

Material				Drain Pan	Drain Side	Electro-Fin Coat	Moisture Eliminator
Fin	Tube	Header	Case				
Aluminum .0075 in	Copper .020 in	Copper	Stainless steel	Stainless steel	Drive side	NA	NA

AHRI 410 Certification

Certified in accordance with the AHRI Forced-Circulation Air-Cooling and Air-Heating Coils Certification Program which is based on AHRI Standard 410 within the Range of Standard Rating Conditions listed in Table 1 of the Standard. Certified units may be found in the AHRI Directory at www.ahridirectory.org

Future Hot Deck Coil(52 ins)

Number of Coils	Number of Rows
1	1

Coil Air Pressure Drop	Finned Height	Finned Width	Face Area	Face Velocity
NA inWc	15 in	50 in	5.21 ft²	858 ft/min

Connection Location	Connection Material
Drive side	Carbon steel

Coil Model	Drain Pan	Drain Pan Side
Future Coil (Not Supplied)	NA	NA

AHRI 410 Certification

Coil is NOT certified by AHRI

Door

Location	Drive Side Door Width	Opp. Drv. Side Door Width	Opening
Both sides	18 in	18 in	Outward

Unit Sound Power (dB)

Type	63 Hz	125 Hz	250 Hz	500 Hz	1000 Hz	2000 Hz	4000 Hz	8000 Hz
Radiated:	79	84	71	65	69	59	46	51
Unit Discharge:	89	94	89	86	91	87	82	81
Unit Return:	86	91	86	83	88	84	79	78

Shipping Section Details

Section	Length in	Weight lb	Corner Weights (lb)				Center of Gravity (in)		
			P1	P2	P3	P4	XX	YY	ZZ
1	40	841	259	190	176	245	19	28	17
2	52	874	202	190	235	247	29	32	18
3	52	421	184	171	152	165	25	32	17
Entire Unit	**92**	**2136**	**602**	**508**	**606**	**700**	**50**	**30**	**27**

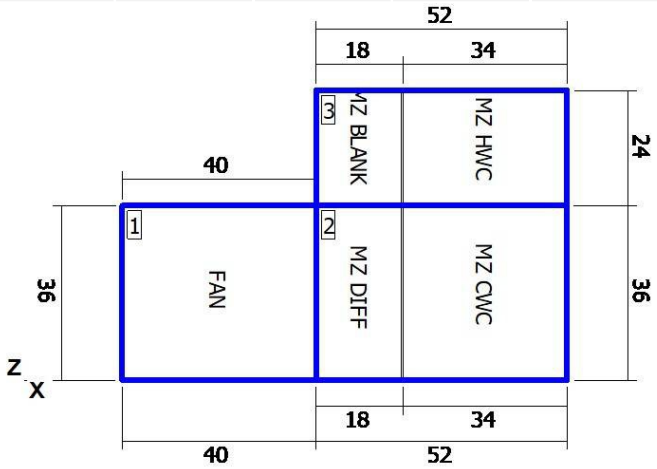

Elevation View

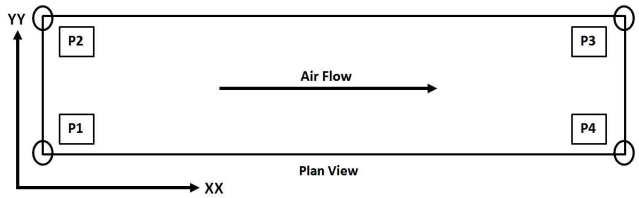

Plan View

NOTE: Special components aren't included in the corner weights and center of gravity data.

Shipping Protection

None

Supply Static Pressure Drop

Component	Option	Static Pressure Drop
Supply Fan	Cabinet	
Supply Fan	Special	0.62 insWg
Multizone	Multizone	0.77 insWg
External Static	External Static	0.70 insWg
Total Supply Fan Static		2.09 insWg

Minimum Recommended Drain Pan Trap Dimensions

Shipping Section	Component	H
2	Chilled Water coil	1.04

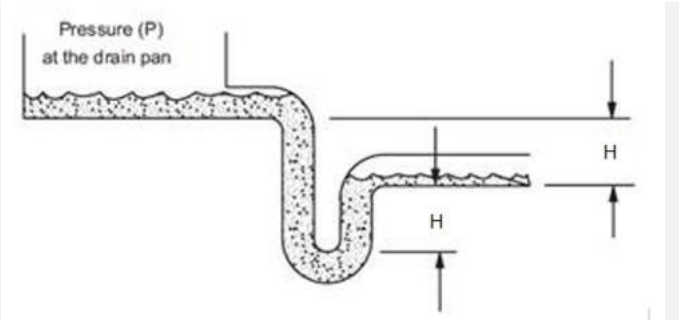

Dimensions provided as a courtesy and are recommended minimums only. Daikin is not responsible for supplying or designing drain pan traps and is not responsible for any damage caused by incorrect trap heights. The dimensions listed above should be reviewed and approved by a licensed plumbing professional.

This calculation is based on an assumption that 0.25 inches of the external static pressure is in the return duct and the remainder is in the supply duct. If actual conditions vary from this assumption then contact Applications for new trap height recommendations.

AHRI Certification

Certified by the AHRI Central Station Air-Handling Unit (AHU) Certification Program, which is based on AHRI Standard 430/431. AHRI certified units are subject to rigorous and continuous testing, have performance ratings independently measured and are third-party verified. Certified units may be found in the AHRI Directory at www.ahridirectory.org.

Notes

Standard
1. As a standalone component, unit meets or exceeds requirements of ASHRAE 90.1 - 2007. The approving authority is responsible for compliance of multi - component building systems.

51MN4W

Klein ISD Klenk ES AHU rep

141

1/17/2026

AHU-9 (Klenk)

Drawing

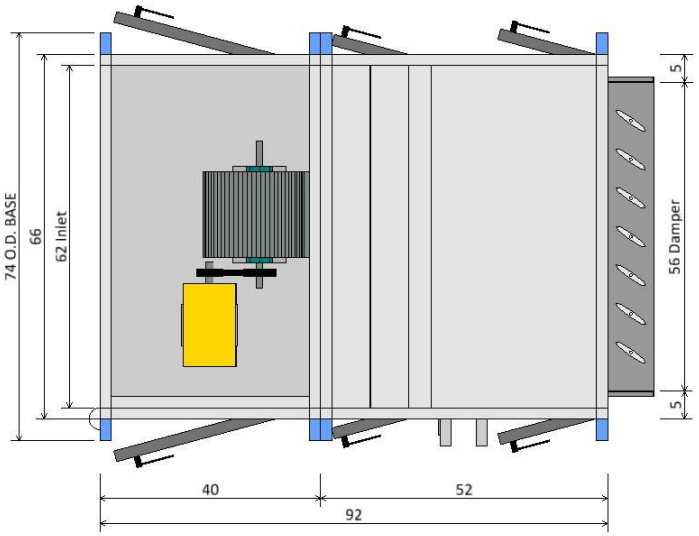

PLAN VIEW

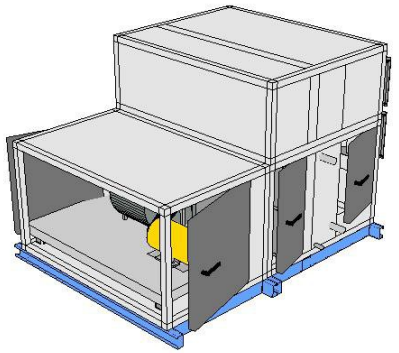

ISOMETRIC VIEW

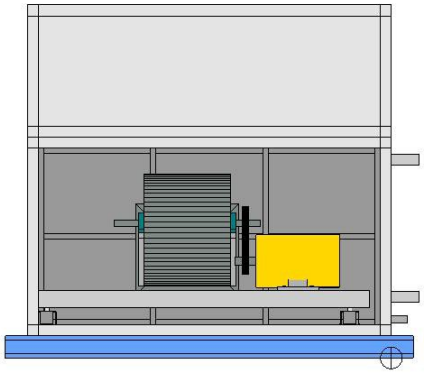

FRONT END VIEW

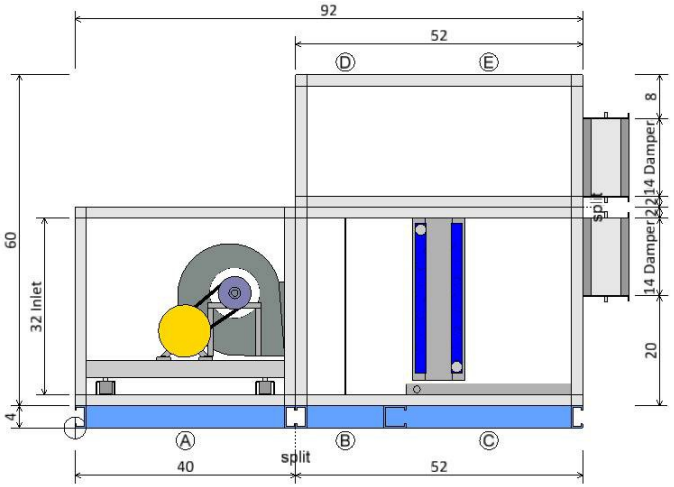

ELEVATION VIEW

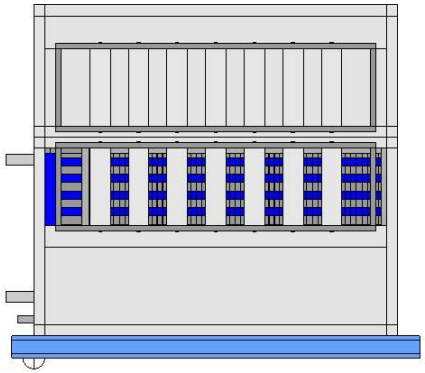

REAR END VIEW

Plan/Elevation	Unit Tag: AHU-9 (Klenk)			Sales Office: HTS Texas		
Product: Vision Air Handler	Project Name: Klein ISD Klenk ES AHU replacements			Sales Engineer:		
Model: CAH010GMAM	Jan. 17, 2026	Ver/Rev:	Sheet: 1 of 1	Scale: NTS	Tolerance: +/-0.25"	Dwg Units: in

DAIKIN
13600 Industrial Park Blvd, Minneapolis, MN 55441
www.DaikinApplied.com Software Version: 13.91

All opening dimensions have a 1" mounting flange along the inner edge. The actual airflow area of the opening is 2" smaller in each dimension.

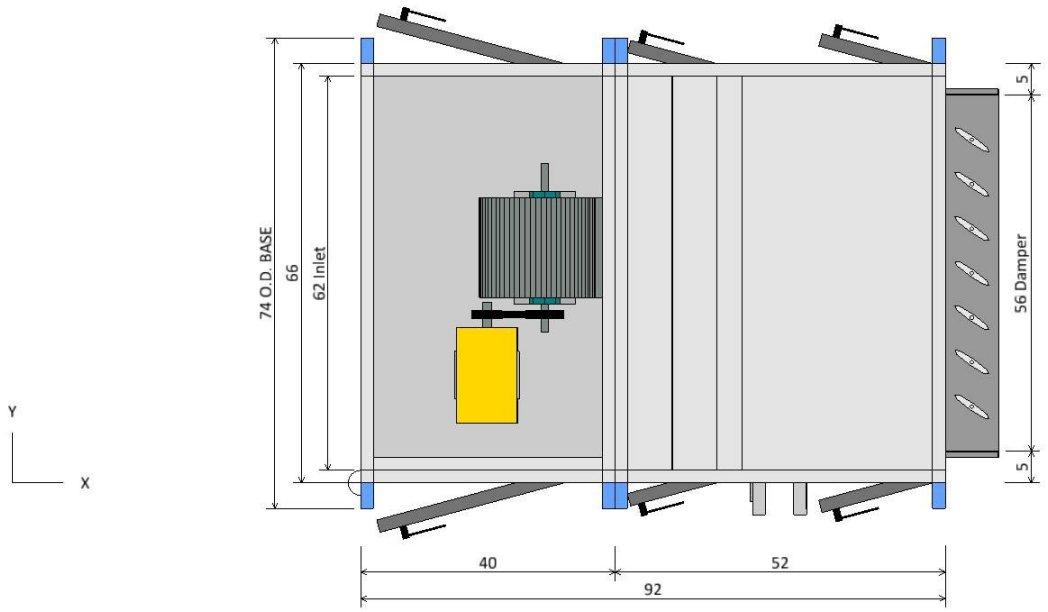

PLAN VIEW

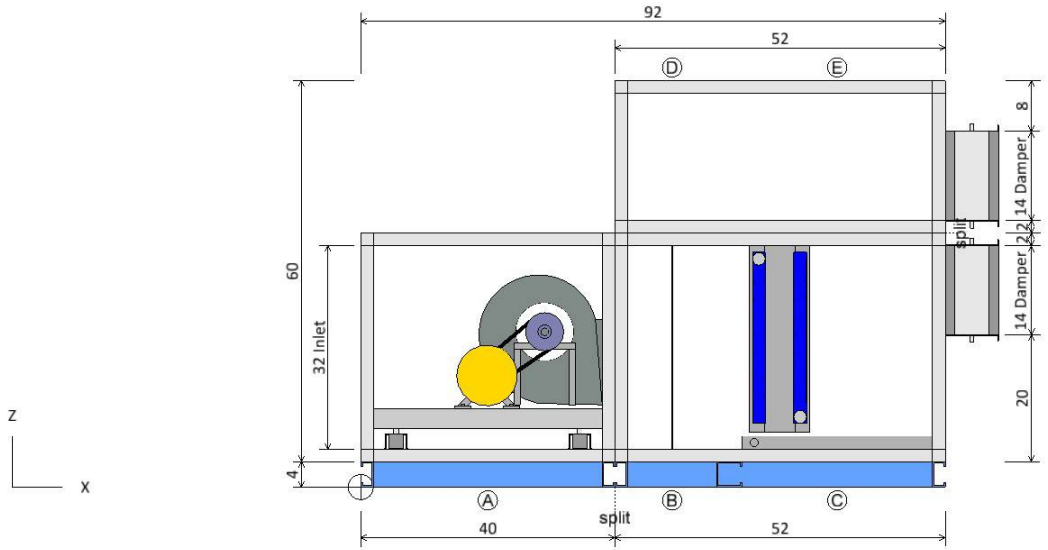

ELEVATION VIEW

Component Key		
Ⓐ	Supply Fan	
	Fan Type:	Centrifugal DWDI
	Fan Size (Class):	12 (2)
	Air Flowrate:	4470.0 cfm
	T.S.P:	2.1 insWg
	Motor Power:	7.5 HP
	Right Door (WxH):	30 ins x 32 ins
	Left Door (WxH):	30 ins x 32 ins
Ⓑ	Diffuser	
	Right Door (WxH):	14 ins x 32 ins
	Left Door (WxH):	14 ins x 32 ins
Ⓒ	Chilled Water coil	
	Coil Model:	5WL0806B
	Total Capacity:	147987.0 Btu/hr
	Right Door (WxH):	18 ins x 26 ins
	Left Door (WxH):	18 ins x 26 ins
Ⓓ	Access Section	
Ⓔ	Hot Water Coil	
	Coil Model:	5WH0001C
	Total Capacity:	0.0 Btu/hr

Plan/Elevation - No Ends	Unit Tag: AHU-9 (Klenk)			Sales Office: HTS Texas		
Product: Vision Air Handler	Project Name: Klein ISD Klenk ES AHU replacements			Sales Engineer:		
Model: CAH010GMAM	Jan. 17, 2026	Ver/Rev:	Sheet: 1 of 1	Scale: NTS	Tolerance: +/-0.25"	Dwg Units: in

DAIKIN
13600 Industrial Park Blvd, Minneapolis, MN 55441
www.DaikinApplied.com Software Version: 13.91

All opening dimensions have a 1" mounting flange along the inner edge. The actual airflow area of the opening is 2" smaller in each dimension.

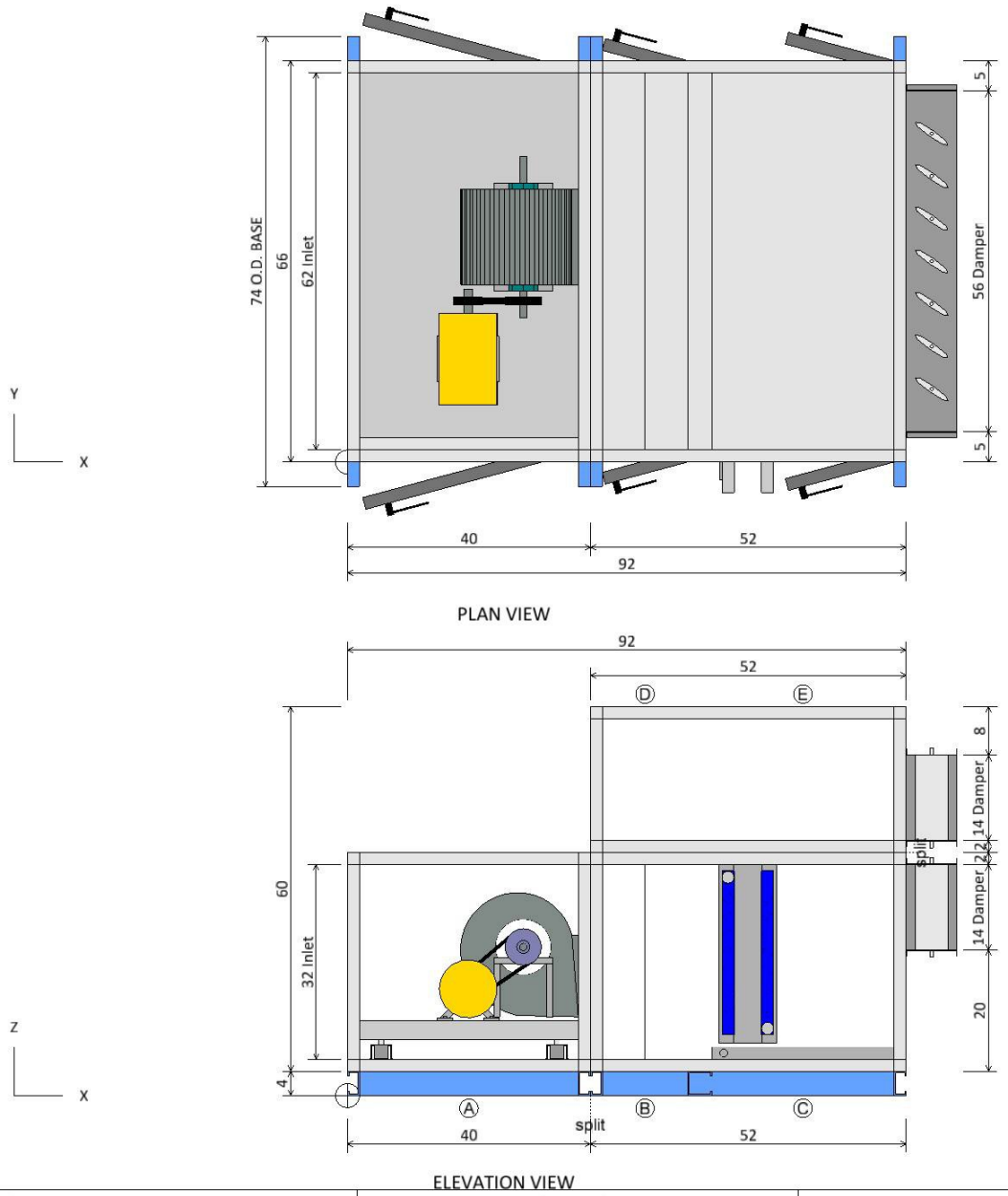

Component Key

	Type	X	Y	Z	Wid	Hgt
Ⓐ	Supply Fan Opening	0.00	2.00	6.00	62.00	32.00
Ⓒ	Chilled Water coil MZ cold deck output	100.38	5.00	24.00	56.00	14.00
Ⓔ	Hot Water Coil MZ hot deck output	100.38	5.00	42.00	56.00	14.00

Note: Dimensions are measured from the origin point.
Note: Openings with or without dampers are recessed into the unit by approximately 1.75 in.

Opening/Damper Connections	Unit Tag: AHU-9 (Klenk)			Sales Office: HTS Texas		
Product: Vision Air Handler	Project Name: Klein ISD Klenk ES AHU replacements			Sales Engineer:		
Model: CAH010GMAM	Jan. 17, 2026	Ver/Rev:	Sheet: 1 of 1	Scale: NTS	Tolerance: +/-0.25"	Dwg Units: in

DAIKIN
13600 Industrial Park Blvd, Minneapolis, MN 55441
www.DaikinApplied.com Software Version: 13.91

All opening dimensions have a 1" mounting flange along the inner edge. The actual airflow area of the opening is 2" smaller in each dimension.

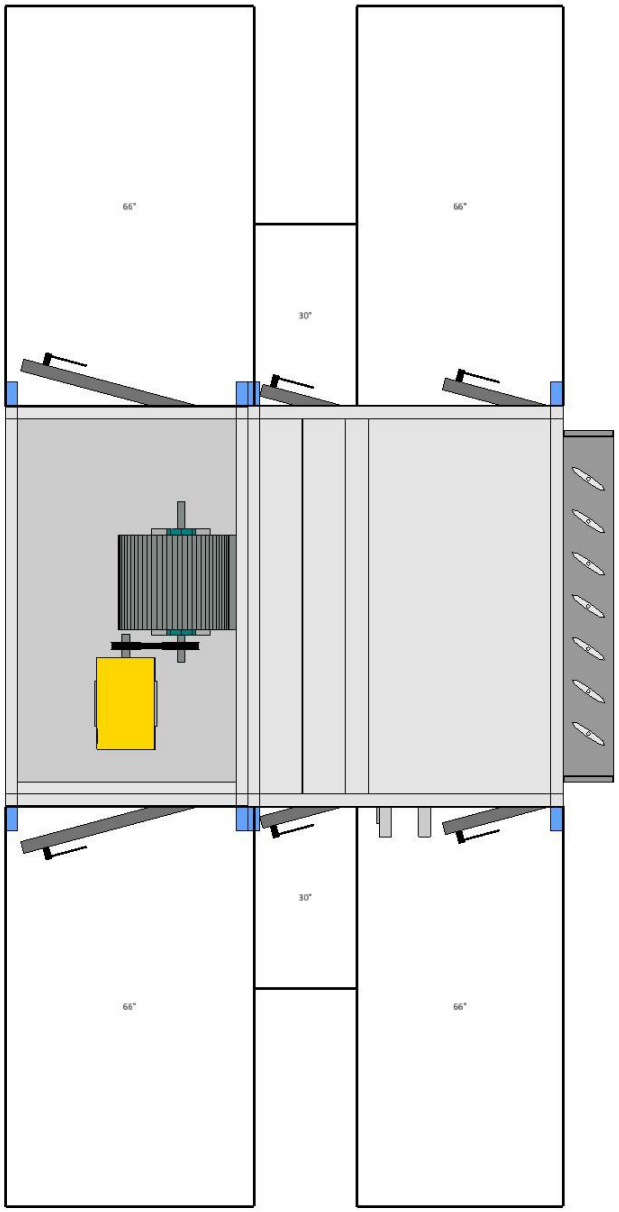

PLAN VIEW

Notes
Check local electrical component service clearance codes for specific distances. Access is only required on one side of the unit.

Service Clearance View	Unit Tag: AHU-9 (Klenk)			Sales Office: HTS Texas		
Product: Vision Air Handler	Project Name: Klein ISD Klenk ES AHU replacements			Sales Engineer:		
Model: CAH010GMAM	Jan. 17, 2026	Ver/Rev:	Sheet: 1 of 1	Scale: NTS	Tolerance: +/-0.25"	Dwg Units: in

DAIKIN
13600 Industrial Park Blvd, Minneapolis, MN 55441
www.DaikinApplied.com Software Version: 13.91

All opening dimensions have a 1" mounting flange along the inner edge. The actual airflow area of the opening is 2" smaller in each dimension.

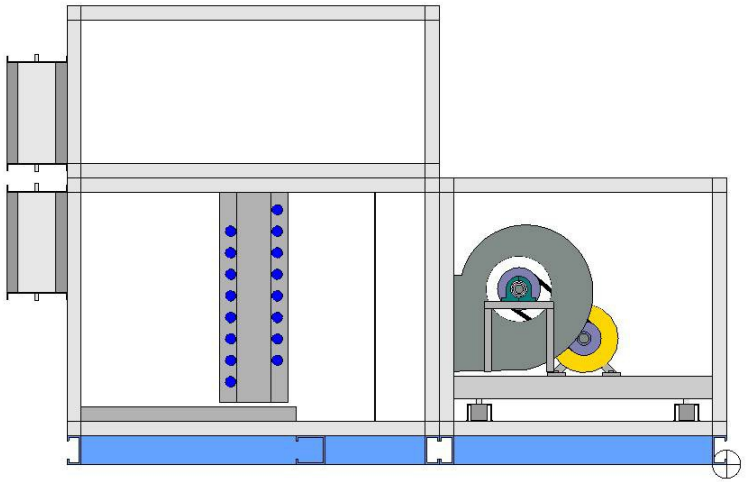

LEFT ELEVATION VIEW

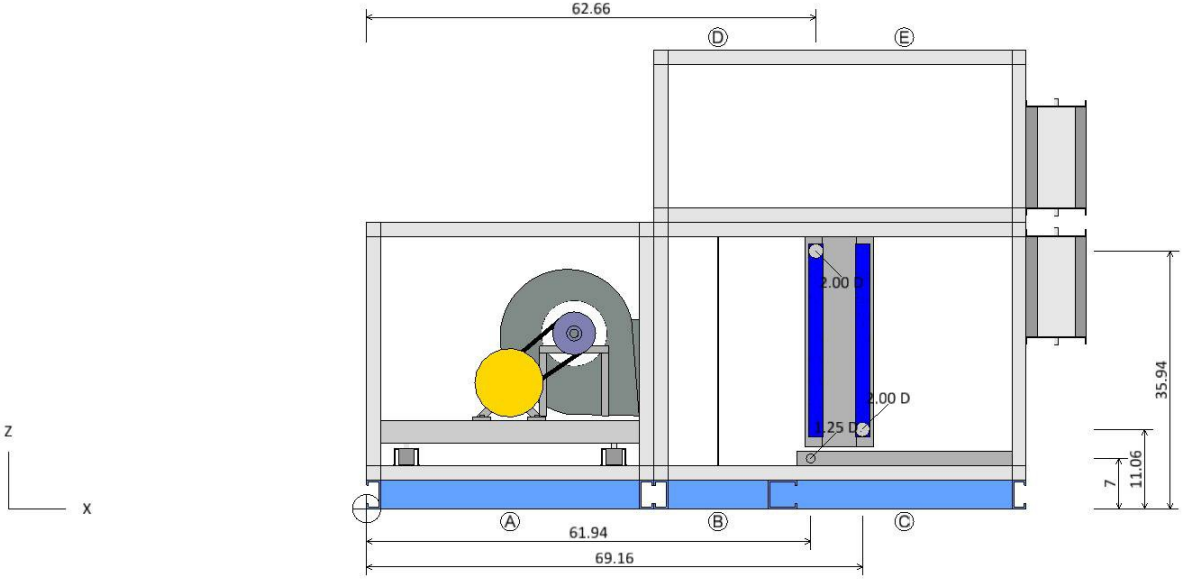

RIGHT ELEVATION VIEW

Coil and Drain Connections

	Type	X	Y	Z	Diam
Ⓒ	Chilled Water coil Condensate drain conn:	61.94	-2.90	7.00	1.25
	Cold water inlet:	69.16	-7.00*	11.06	2.00
	Cold water outlet:	62.66	-7.00*	35.94	2.00

Notes:
Dimensions are measured from the origin point.
* value varies +/- 1 in.

Coil and Drain Connections	Unit Tag: AHU-9 (Klenk)			Sales Office: HTS Texas		
Product: Vision Air Handler	Project Name: Klein ISD Klenk ES AHU replacements			Sales Engineer:		
Model: CAH010GMAM	Jan. 17, 2026	Ver/Rev:	Sheet: 1 of 1	Scale: NTS	Tolerance: +/-0.25"	Dwg Units: in

DAIKIN
13600 Industrial Park Blvd, Minneapolis, MN 55441
www.DaikinApplied.com Software Version: 13.91

All opening dimensions have a 1" mounting flange along the inner edge. The actual airflow area of the opening is 2" smaller in each dimension.

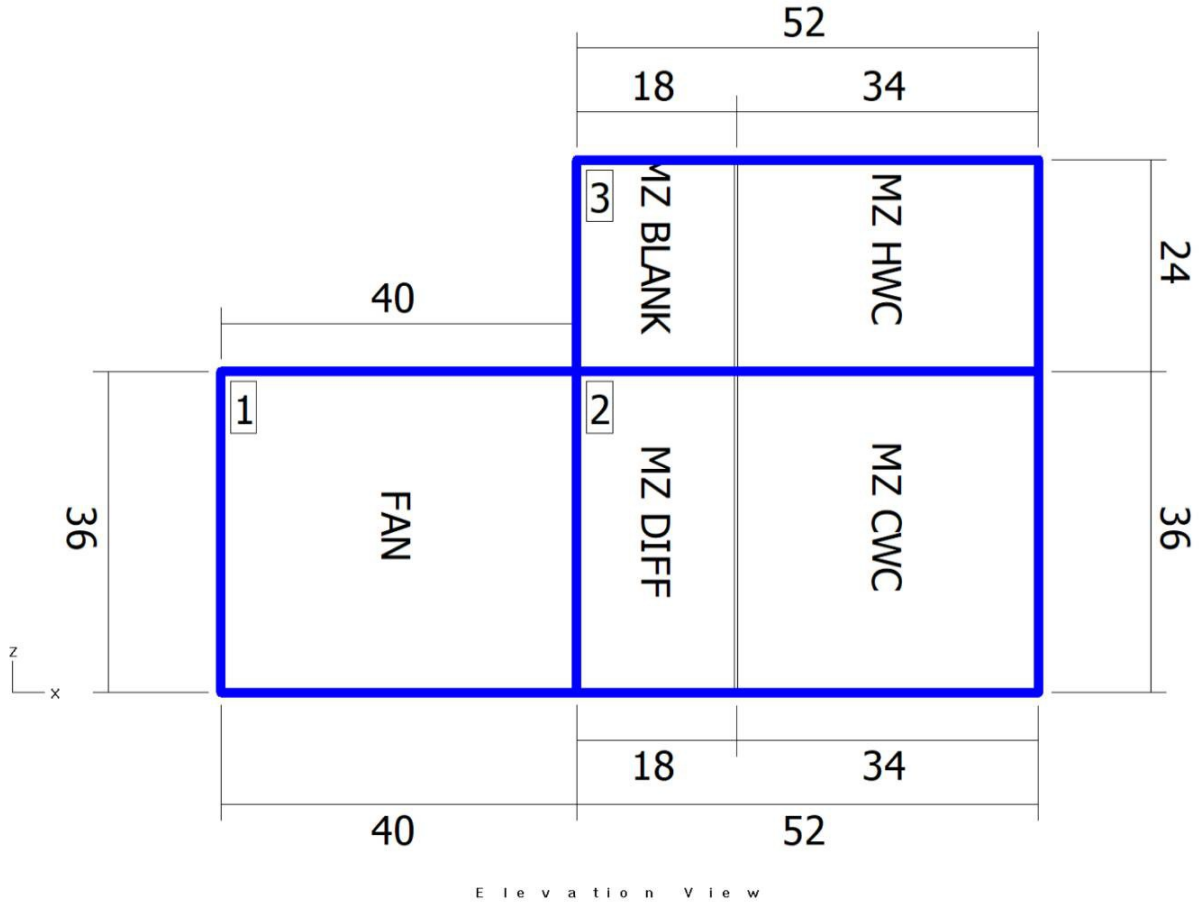

Elevation View

Shipping Sections

Section	Weight (lb)	X	Y	Z
Section 1	840.91	40	66	36
Section 2	873.62	52	66	36
Section 3	421.29	52	66	24
Total Unit	2135.83	92	66	60

Note: Base rails, curb ready base, coil connectors, drain connectors, and control boxes not included in height X, Y, Z dimensions.
Shipping section may be 2" longer in air flow direction due to internal splice joint.
Horizontal multizone section : Add 8.38" to section length if dampers are installed.

Shipping Sections	Unit Tag: AHU-9 (Klenk)			Sales Office: HTS Texas		
Product: Vision Air Handler	Project Name: Klein ISD Klenk ES AHU replacements			Sales Engineer:		
Model: CAH010GMAM	Jan. 17, 2026	Ver/Rev:	Sheet: 1 of 1	Scale: NTS	Tolerance: +/-0.25"	Dwg Units: in

DAIKIN
13600 Industrial Park Blvd, Minneapolis, MN 55441
www.DaikinApplied.com Software Version: 13.91

All opening dimensions have a 1" mounting flange along the inner edge. The actual airflow area of the opening is 2" smaller in each dimension.

Product Drawing	Unit Tag: AHU-9 (Klenk)			Sales Office: HTS Texas		
Product: Vision Air Handler	Project Name: Klein ISD Klenk ES AHU replacements			Sales Engineer:		
Model: CAH010GMAM	Jan. 17, 2026	Ver/Rev:	Sheet: 1 of 1	Scale: NTS	Tolerance: +/-0.25"	Dwg Units: in

DAIKIN
13600 Industrial Park Blvd, Minneapolis, MN 55441
www.DaikinApplied.com Software Version: 13.91

All opening dimensions have a 1" mounting flange along the inner edge. The actual airflow area of the opening is 2" smaller in each dimension.

Daikin AHU Fan Curve

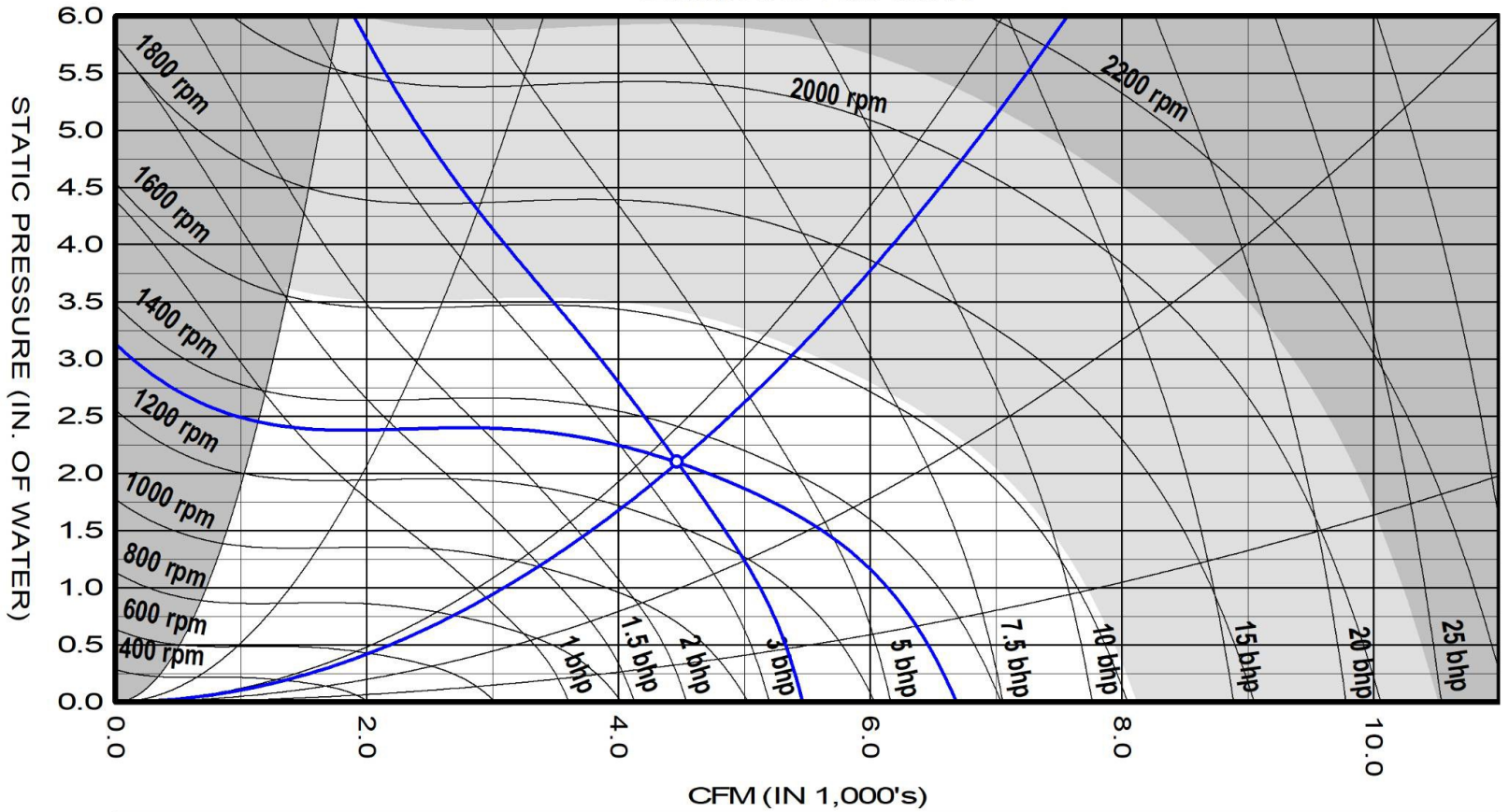

12.62" Forward Curved Supply Fan at Standard Conditions					
Air volume	4470	cfm	Fan speed	1329	rpm
Total static	2.09	insWg	Max speed	2091	rpm
Fan Shaft Power	3.5	bhp	Efficiency	42.3	%
Fan Energy Index(FEI)	0.92				

Unit tagging	AHU-9 (Klenk)	Date	January-17-2026
Job name	Klein ISD Klenk ES AHU replacements	Time	09:42

Supply fan performance is certified in accordance with the Central Station Air-Handling Unit Certification Program, which is based on AHRI Standard 430.

Job Information	Technical Data Sheet
Job Name	Klein ISD Klenk ES AHU replacements
Date	January 17 2026
Submitted By	Salas O'Brien
Software Version	13.82
Unit Tag	AHU-9 Filter

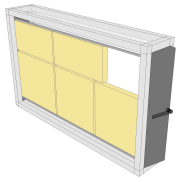

Unit Overview

Model Number	Supply					
	Air Volume cfm	Static Pressure		External Dimensions		
		External inWc	Total inWc	Height in	Width in	Length in
CAC012GVAM	4470	0.70	0.00	40*	66*	12

**Not including base rails, coil connectors, drain connectors and control boxes.*

Unit

Model Number:	CAC012GVAM		
Approval:	ETL Listed / ETL Listed to Canadian Safety Standards (ETL Label / ETLc Label)		
Outer Panel:	18 gauge G90 Galvanized Steel (unpainted)		
Liner:	24 gauge Galvanized Steel (unless noted per section)		
Insulation:	R-13 Injected Foam		
Unit Configuration:	Inline horizontal	**Drive (Handling) Location:**	Right
Base:	None	**Wall Thickness:**	2 in
Altitude:	0 ft	**Parts Warranty:**	Additional One Year, Two Year Total

Panel Filter

Component: 1 | Length: 12 in | Shipping Section: 1

Type	Efficiency	Nominal Face Velocity	Actual Face Velocity	Actual Face Area	Air Volume	Filter Loading
Pre Pleat	MERV 13	362 ft/min	371 ft/min	12.1 ft²	4470 cfm	Side

Air Pressure Drop				Number of Filters	Height	Width	Depth
Clean Air	Mean Air	Dirty Air	User Spec				
0.23 inWc	**0.62** inWc	1.00 inWc	N/A	1	20 in	24 in	2 in
				2	20 in	20 in	2 in
				2	12 in	24 in	2 in

Door

Location	Drive Side Door Width	Opp. Drv. Side Door Width	Opening
Both sides	8 in	8 in	Outward

Unit Sound Power (dB)

Type	63 Hz	125 Hz	250 Hz	500 Hz	1000 Hz	2000 Hz	4000 Hz	8000 Hz
Radiated:	64	54	48	41	39	41	46	51
Unit Discharge:	64	54	48	41	39	41	46	51
Unit Return:	64	54	48	41	39	41	46	51

Shipping Section Details

Section	Length in	Weight lb	Corner Weights (lb)				Center of Gravity (in)		
			P1	P2	P3	P4	XX	YY	ZZ
1	12	158	40	40	40	40	6	33	20
Entire Unit	**12**	**158**	**40**	**40**	**40**	**40**	**6**	**33**	**20**

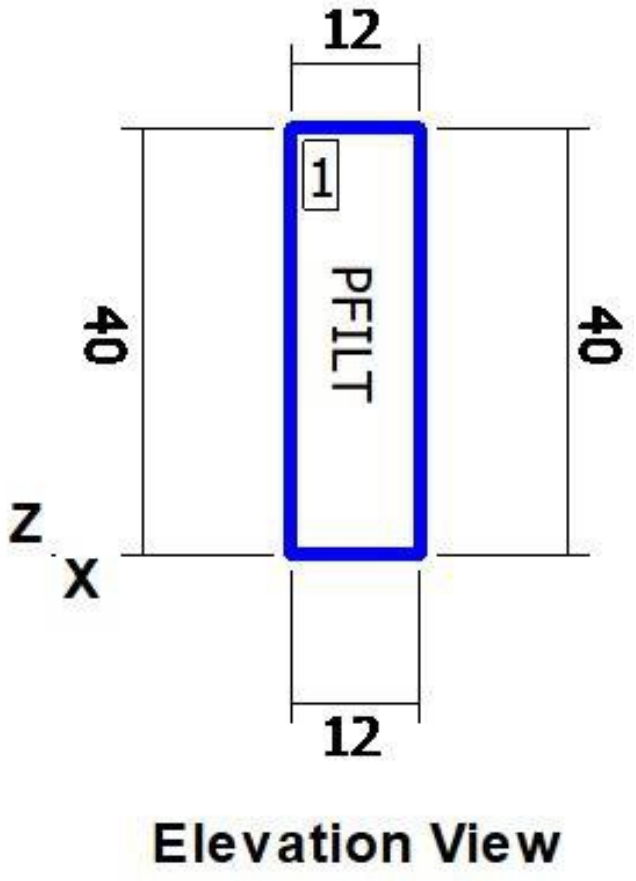

Elevation View

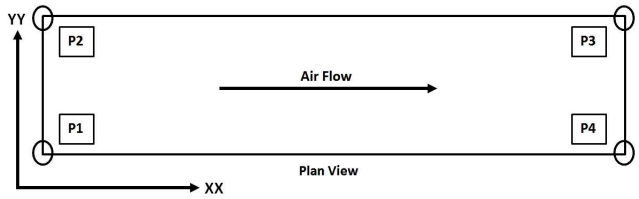

NOTE: Special components aren't included in the corner weights and center of gravity data.

Shipping Protection

None

Supply Static Pressure Drop

Component	Option	Static Pressure Drop
Panel Filter	Panel Filter	0.62 insWg
External Static	External Static	0.70 insWg
Total Supply Fan Static		

AHRI Certification

The air-handler is selected outside of the scope of AHRI Standard 430/431

Notes

Standard
1. As a standalone component, unit meets or exceeds requirements of ASHRAE 90.1 - 2007. The approving authority is responsible for compliance of multi - component building systems.

51MN4W

Klein ISD Klenk ES AHU rep

151

1/17/2026

AHU-9 Filter

Drawing

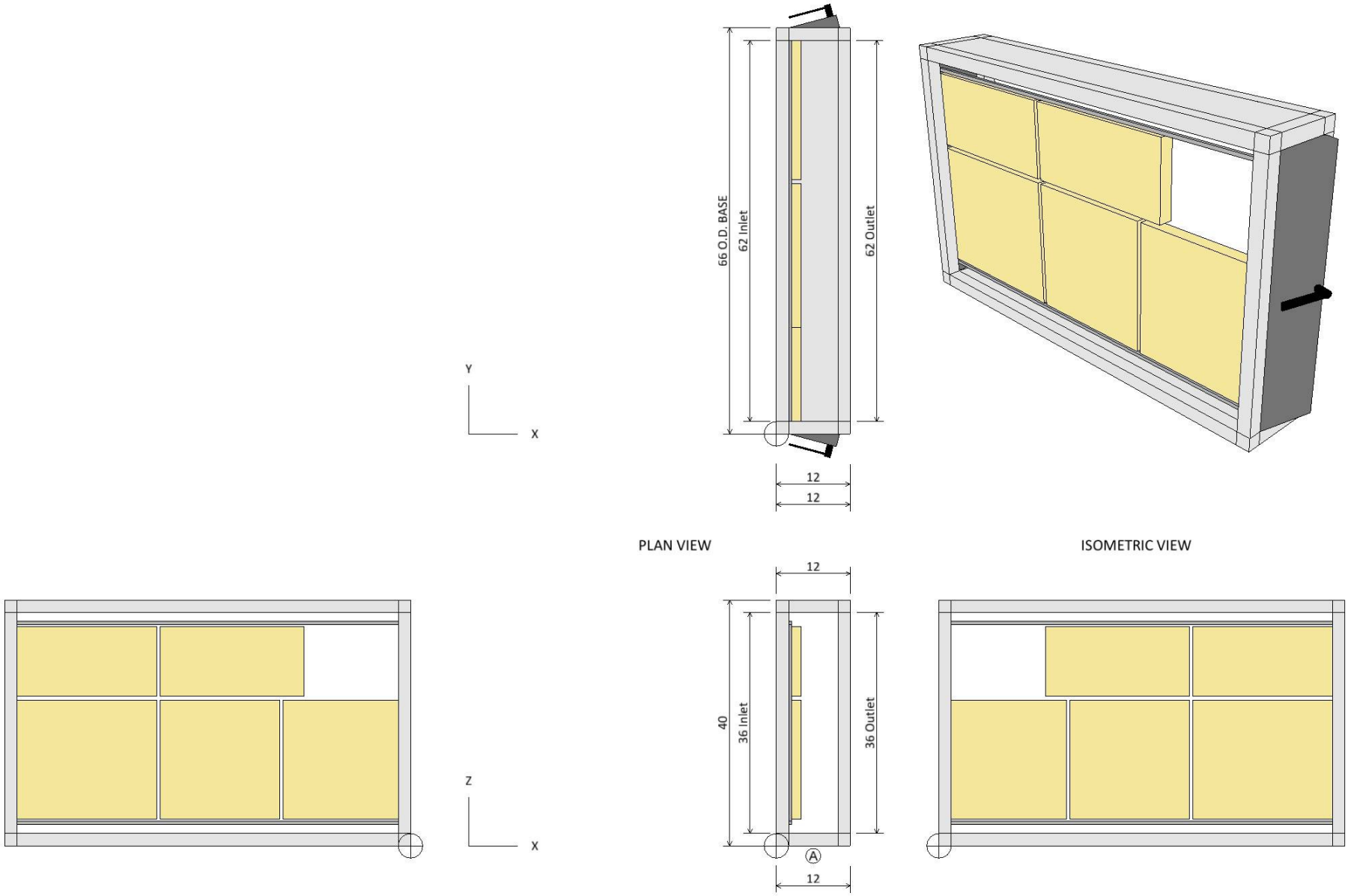

Plan/Elevation	Unit Tag: AHU-9 Filter			Sales Office: HTS Texas		
Product: Vision Air Handler	Project Name: Klein ISD Klenk ES AHU replacements			Sales Engineer:		
Model: CAC012GVAM	Jan. 17, 2026	Ver/Rev:	Sheet: 1 of 1	Scale: NTS	Tolerance: +/-0.25"	Dwg Units: in

DAIKIN

13600 Industrial Park Blvd, Minneapolis, MN 55441

www.DaikinApplied.com Software Version: 13.82

All opening dimensions have a 1" mounting flange along the inner edge. The actual airflow area of the opening is 2" smaller in each dimension.

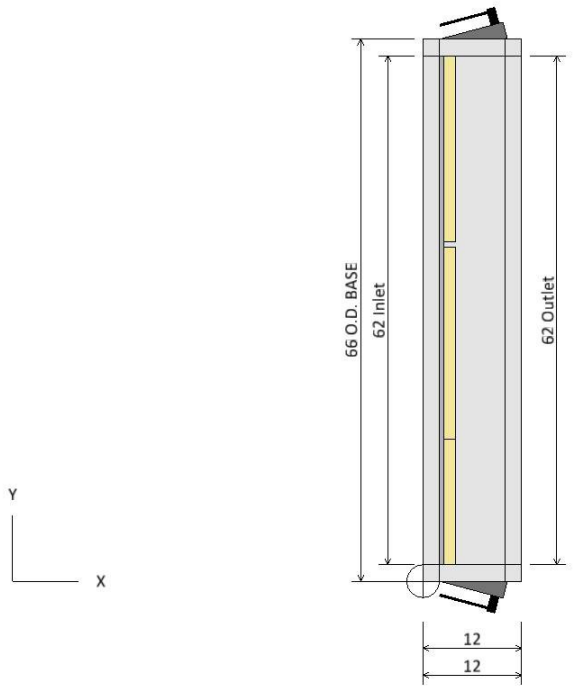

PLAN VIEW

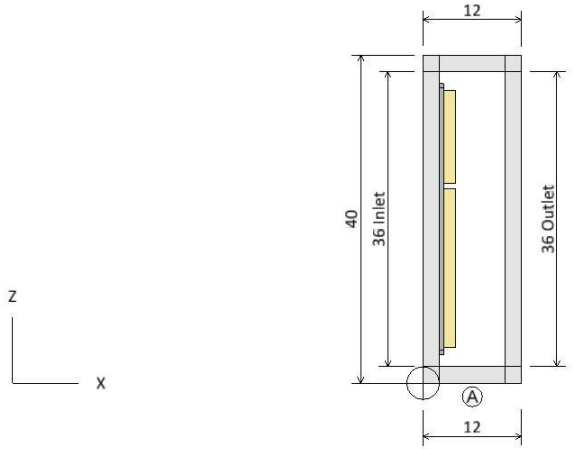

ELEVATION VIEW

Component Key	
Ⓐ	Panel Filter Filter Type: PrePleat (MERV 13) Right Door (WxH): 8 ins x 36 ins Left Door (WxH): 8 ins x 36 ins

Plan/Elevation - No Ends	Unit Tag: AHU-9 Filter			Sales Office: HTS Texas		
Product: Vision Air Handler	Project Name: Klein ISD Klenk ES AHU replacements			Sales Engineer:		
Model: CAC012GVAM	Jan. 17, 2026	Ver/Rev:	Sheet: 1 of 1	Scale: NTS	Tolerance: +/-0.25"	Dwg Units: in

DAIKIN
13600 Industrial Park Blvd, Minneapolis, MN 55441
www.DaikinApplied.com Software Version: 13.82

All opening dimensions have a 1" mounting flange along the inner edge. The actual airflow area of the opening is 2" smaller in each dimension.

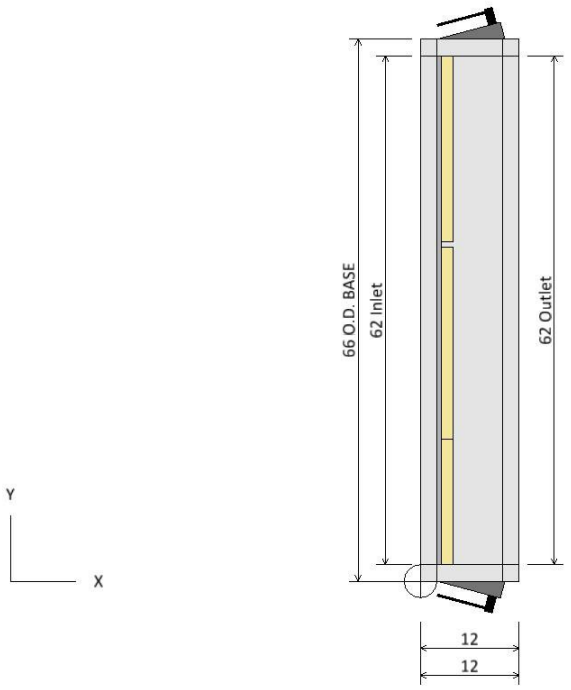

PLAN VIEW

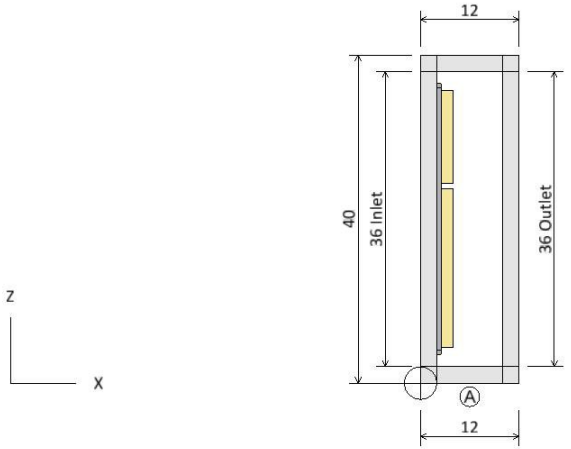

ELEVATION VIEW

Component Key

	Type	X	Y	Z	Wid	Hgt
Ⓐ	Panel Filter Opening	0.00	2.00	2.00	62.00	36.00
	Opening	12.00	2.00	2.00	62.00	36.00

Note: Dimensions are measured from the origin point.
Note: Openings with or without dampers are recessed int the unit by approximately 1.75 in.

Opening/Damper Connections	Unit Tag: AHU-9 Filter			Sales Office: HTS Texas		
Product: Vision Air Handler	Project Name: Klein ISD Klenk ES AHU replacements			Sales Engineer:		
Model: CAC012GVAM	Jan. 17, 2026	Ver/Rev:	Sheet: 1 of 1	Scale: NTS	Tolerance: +/-0.25"	Dwg Units: in

DAIKIN
13600 Industrial Park Blvd, Minneapolis, MN 55441
www.DaikinApplied.com Software Version: 13.82

All opening dimensions have a 1" mounting flange along the inner edge. The actual airflow area of the opening is 2" smaller in each dimension.

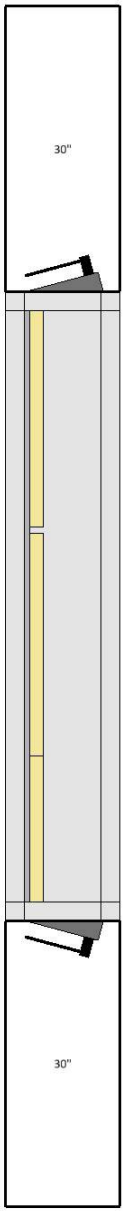

PLAN VIEW

Notes
Check local electrical component service clearance codes for specific distances. Access is only required on one side of the unit.

Service Clearance View	Unit Tag: AHU-9 Filter			Sales Office: HTS Texas		
Product: Vision Air Handler	Project Name: Klein ISD Klenk ES AHU replacements			Sales Engineer:		
Model: CAC012GVAM	Jan. 17, 2026	Ver/Rev:	Sheet: 1 of 1	Scale: NTS	Tolerance: +/-0.25"	Dwg Units: in

DAIKIN
13600 Industrial Park Blvd, Minneapolis, MN 55441
www.DaikinApplied.com Software Version: 13.82

All opening dimensions have a 1" mounting flange along the inner edge. The actual airflow area of the opening is 2" smaller in each dimension.

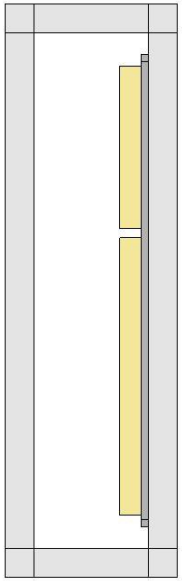

LEFT ELEVATION VIEW

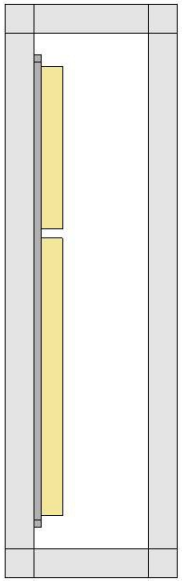

RIGHT ELEVATION VIEW

Coil and Drain Connections

Note: Dimensions are measured from the origin point.

Coil and Drain Connections	Unit Tag: AHU-9 Filter			Sales Office: HTS Texas		
Product: Vision Air Handler	Project Name: Klein ISD Klenk ES AHU replacements			Sales Engineer:		
Model: CAC012GVAM	Jan. 17, 2026	Ver/Rev:	Sheet: 1 of 1	Scale: NTS	Tolerance: +/-0.25"	Dwg Units: in

DAIKIN
13600 Industrial Park Blvd, Minneapolis, MN 55441
www.DaikinApplied.com Software Version: 13.82

All opening dimensions have a 1" mounting flange along the inner edge. The actual airflow area of the opening is 2" smaller in each dimension.

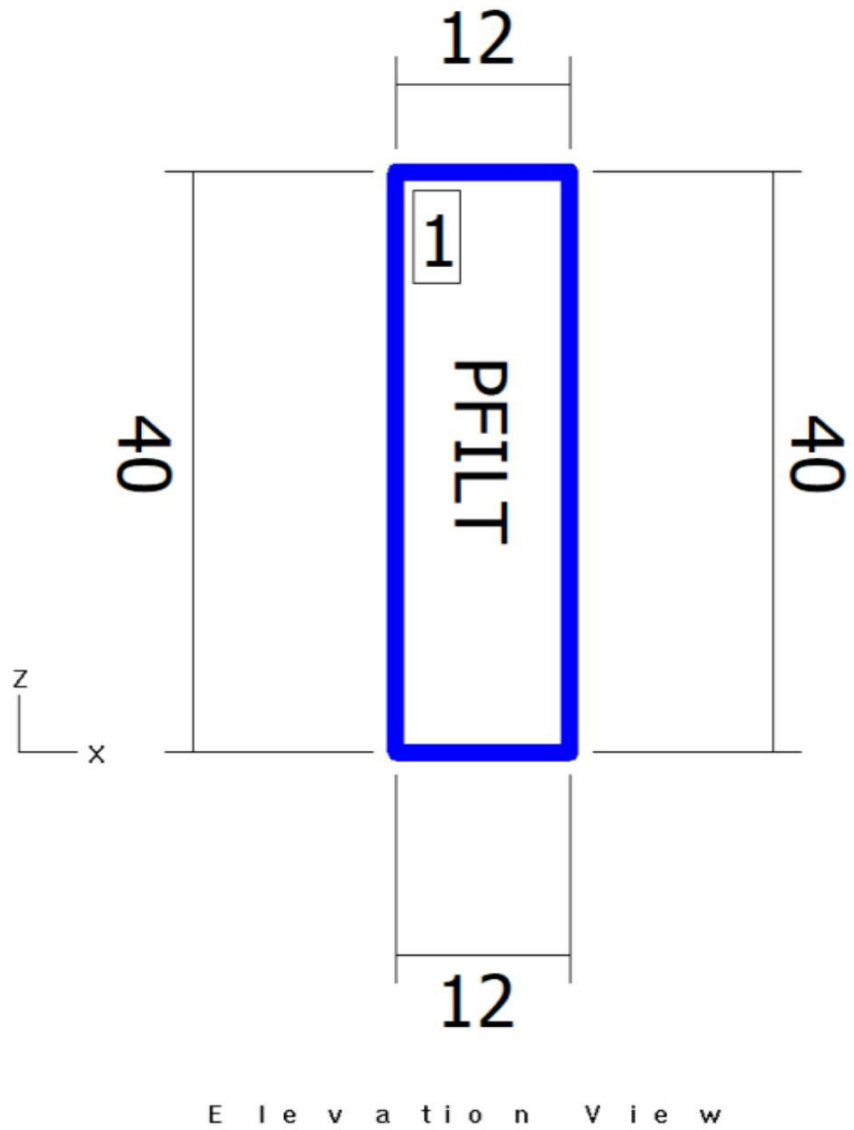

Elevation View

Shipping Sections

Section	Weight (lb)	X	Y	Z
Section 1	158.40	12	66	40
Total Unit	158.40	12	66	40

Note: Base rails, curb ready base, coil connectors, drain connectors, and control boxes not included in height X, Y, Z dimensions.
Shipping section may be 2" longer in air flow direction due to internal splice joint.

Shipping Sections	Unit Tag: AHU-9 Filter			Sales Office: HTS Texas		
Product: Vision Air Handler	Project Name: Klein ISD Klenk ES AHU replacements			Sales Engineer:		
Model: CAC012GVAM	Jan. 17, 2026	Ver/Rev:	Sheet: 1 of 1	Scale: NTS	Tolerance: +/-0.25"	Dwg Units: in

DAIKIN
13600 Industrial Park Blvd, Minneapolis, MN 55441
www.DaikinApplied.com Software Version: 13.82

All opening dimensions have a 1" mounting flange along the inner edge. The actual airflow area of the opening is 2" smaller in each dimension.

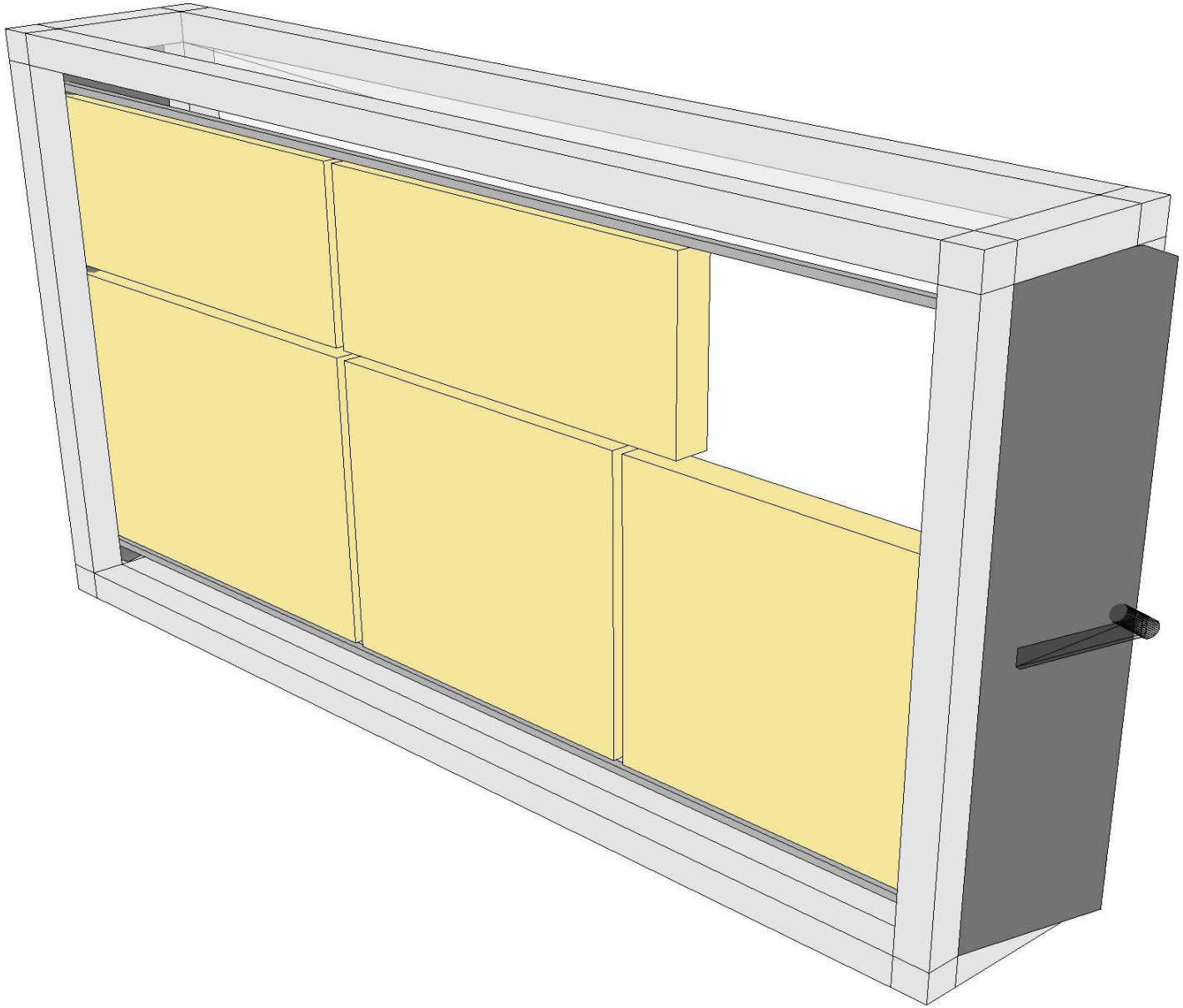

Product Drawing	Unit Tag: AHU-9 Filter			Sales Office: HTS Texas		
Product: Vision Air Handler	Project Name: Klein ISD Klenk ES AHU replacements			Sales Engineer:		
Model: CAC012GVAM	Jan. 17, 2026	Ver/Rev:	Sheet: 1 of 1	Scale: NTS	Tolerance: +/-0.25"	Dwg Units: in

DAIKIN
13600 Industrial Park Blvd, Minneapolis, MN 55441
www.DaikinApplied.com Software Version: 13.82

All opening dimensions have a 1" mounting flange along the inner edge. The actual airflow area of the opening is 2" smaller in each dimension.

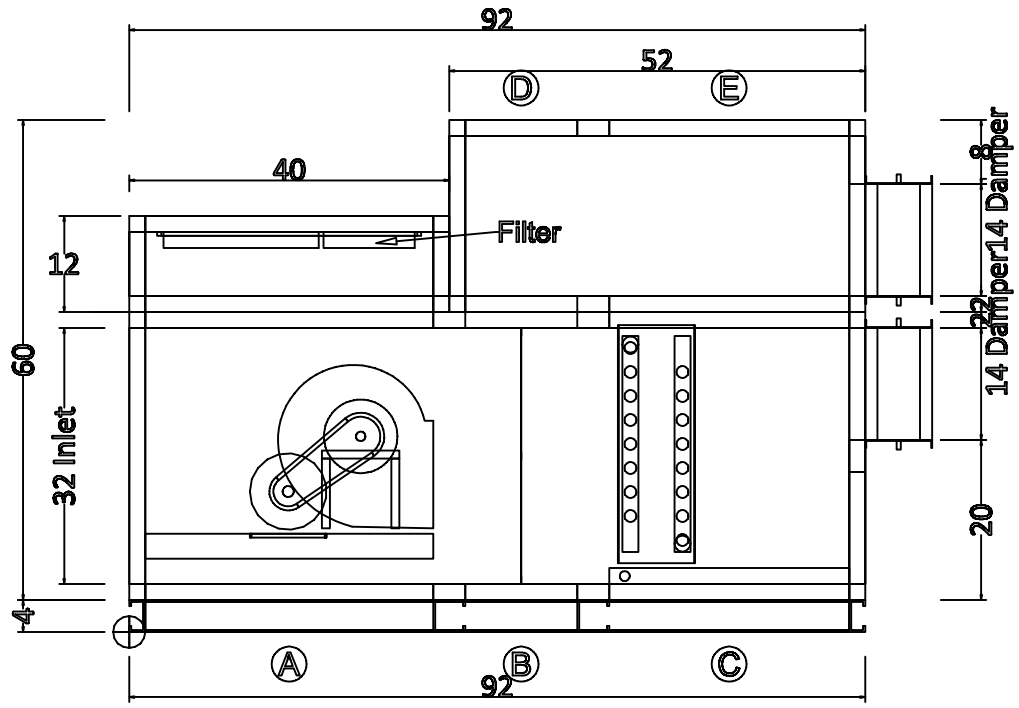

ELEVATION VIEW

Plan/Elevation - No Ends	Unit Tag: AHU-9 (Klenk) Top Filter			Sales Office: HTS Texas			DAIKIN
Product: Vision Air Handler	Project Name: Klein ISD Klenk ES AHU replacements			Sales Engineer:			13600 Industrial Park Blvd, Minneapolis, MN 55441
Model: CAH010GMAM	Dec. 3, 2025	Ver/Rev:	Sheet: 1 of 1	Scale: NTS	Tolerance: +/-0.25"	Dwg Units: in	www.DaikinApplied.com Software Version: 13.82

All opening dimensions have a 1" mounting flange along the inner edge. The actual airflow area of the opening is 2" smaller in each dimension.

Job Information	Technical Data Sheet
Job Name	Klein ISD Klenk ES AHU replacements
Date	January 17 2026
Submitted By	Salas O'Brien
Software Version	13.91
Unit Tag	AHU-10 (Klenk)

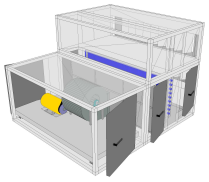

Unit Overview

Model Number	Supply					
	Air Volume cfm	Static Pressure		External Dimensions		
		External inWc	Total inWc	Height in	Width in	Length in
CAH016GMAM	7260	0.75	1.80	40*	84*	96

**Not including base rails, coil connectors, drain connectors and control boxes.*

Unit

Model Number:	CAH016GMAM		
Approval:	ETL Listed / ETL Listed to Canadian Safety Standards (ETL Label / ETLc Label)		
Outer Panel:	18 gauge G90 Galvanized Steel (unpainted)		
Liner:	24 gauge Galvanized Steel (unless noted per section)		
Insulation:	R-13 Injected Foam		
Sound Baffles:	Included in Fan, Plenum, Access and Manual section (unless noted per section)		
Unit Configuration:	Multizone	**Drive (Handling) Location:**	Left
Base:	None	**Wall Thickness:**	2 in
Altitude:	0 ft	**Parts Warranty:**	Additional One Year, Two Year Total

Supply Fan	Component: 1	Length: 42 in	Shipping Section: 1

Fan Performance

Air Volume	Static Pressure			Fan Energy Index(FEI)	Total Input Power	Fan Shaft Power	Fan Wheel Speed		Outlet Velocity
	External	Total	Cabinet				Operating	Maximum	
7260 cfm	0.75 inWc	1.80 inWc	0.00 inWc	0.76	5.0 kW	5.39 BHP	1063 rpm	1725 rpm	3507 ft/min

Fan Data

Fan Type	Blade Type / Class	Quantity of Fans	Wheel Diameter	Number of Blades	Discharge	Motor Location
Centrifugal DWDI	Forward Curved / 2	1	15.00 in	N/A	Bottom horizontal	To Side of Fan

Motor Data

Power	Electrical Supply	Speed	Efficiency	Enclosure	Frame Size	Supplier	Number of Poles	Lock Rotor Current	Full Load Current
10.0 HP	460/60/3 V/Hz/Phase	1750 rpm	Premium	TEFC	215 T frame	Generic	4	106.62 A	12.50 A

Fan Options

Shaft Grounding Kit:	Provided	Isolator Type:	Spring

Drive Package Data*

Fan Sheave	Motor Sheave	Belt	Number of Belts	Actual Drive S.F.	Bearing Type
2AK104H	2AK64H	A48	2	1.35	Standard - L50 (200K)

**Daikin Applied reserves the right to provide a different but equivalent drive package*

VFD/Starter/Disconnect Data

Selection Type:	External J-Box	Vendor:	Factory Standard
Voltage:	460 V	Height x Width x Depth:	6.00 in x 6.00 in x 4.00 in
Mounting:	Door Side	Enclosure:	NEMA 1

Door

Location	Drive Side Door Width	Opp. Drv. Side Door Width	Opening
Both sides	26 in	30 in	Outward

Special Options

Sound Baffle

Sound baffle included

Two Deck Multizone	Component: 2	Length: 54 in	Shipping Section: 2 & 3

Discharge Location	Number of Zones	Multizone APD*	Damper Type	Actuation
Horizontal / Horizontal	9	1.05 inWc	Low leak / Low leak	None - damper mechanically linked

Note : includes coil & balance plate & diffuser

Note : Cabinet height for multizone extends 26 inches above 'External cabinet height' referenced above.
The damper assembly will add 8.38 inches to the cabinet length for horizontal discharge and 8.38 inches to the height for vertical discharge.

Cold Deck Coil

Coil Model	Total Capacity	Sensible Capacity	Number of Coils	Number of Rows	Fins per Inch	Tube Diameter	Tube Spacing (Face x Row)
5WS1206B	281084 Btu/hr	204354 Btu/hr	1	6	12	0.625 in	1.50 in X 1.299 in

Coil Operating Weight	Coil Dry Weight
413 lb	311 lb

Air Volume	Air Temperature				Coil Air Pressure Drop	Finned Height	Finned Length	Face Area	Face Velocity
	Entering		Leaving						
	Dry Bulb	Wet Bulb	Dry Bulb	Wet Bulb					
7260 cfm	78.1 °F	65.1 °F	52.4 °F	52.0 °F	0.81 inWc	30 in	71 in	14.79 ft²	491 ft/min

Water

Entering	Leaving	Flow Rate	Pressure Drop	Velocity	Fluid Volume	Fluid Weight
45.0 °F	53.3 °F	67.70 gpm	8.40 ftHd	3.60 ft/s	12.0 gal	102.00 lb

Connection [Data Per Coil]				Min. Fin Surface Temp.	Min. Tube Wall Surface Temp.	Fouling Factor
Type	Size	Location	Material			
Threaded	2.00 in	Drive side	Carbon steel	45.0 °F	45.0 °F	0.000

Material				Drain Pan	Drain Side	Electro-Fin Coat	Moisture Eliminator
Fin	Tube	Header	Case				
Aluminum .0075 in	Copper .020 in	Copper	Stainless steel	Stainless steel	Drive side	NA	NA

AHRI 410 Certification

Certified in accordance with the AHRI Forced-Circulation Air-Cooling and Air-Heating Coils Certification Program which is based on AHRI Standard 410 within the Range of Standard Rating Conditions listed in Table 1 of the Standard. Certified units may be found in the AHRI Directory at www.ahridirectory.org

Future Hot Deck Coil(54 ins)

Number of Coils	Number of Rows
1	1

Coil Air Pressure Drop	Finned Height	Finned Width	Face Area	Face Velocity
NA inWc	18 in	68 in	8.50 ft²	854 ft/min

Connection Location	Connection Material
Drive side	Carbon steel

Coil Model	Drain Pan	Drain Pan Side
Future Coil (Not Supplied)	NA	NA

AHRI 410 Certification

Coil is NOT certified by AHRI

Door

Location	Drive Side Door Width	Opp. Drv. Side Door Width	Opening
Both sides	18 in	18 in	Outward

Unit Sound Power (dB)

Type	63 Hz	125 Hz	250 Hz	500 Hz	1000 Hz	2000 Hz	4000 Hz	8000 Hz
Radiated:	81	83	75	70	67	57	47	51
Unit Discharge:	91	93	93	91	89	85	85	80
Unit Return:	88	90	90	88	86	82	82	77

Shipping Section Details

Section	Length in	Weight lb	Corner Weights (lb)				Center of Gravity (in)		
			P1	P2	P3	P4	XX	YY	ZZ
1	42	961	289	221	211	279	21	36	17
2	54	1084	228	243	314	299	31	43	17
3	54	520	218	232	215	201	26	43	14
Entire Unit	**96**	**2565**	**672**	**633**	**803**	**842**	**54**	**41**	**28**

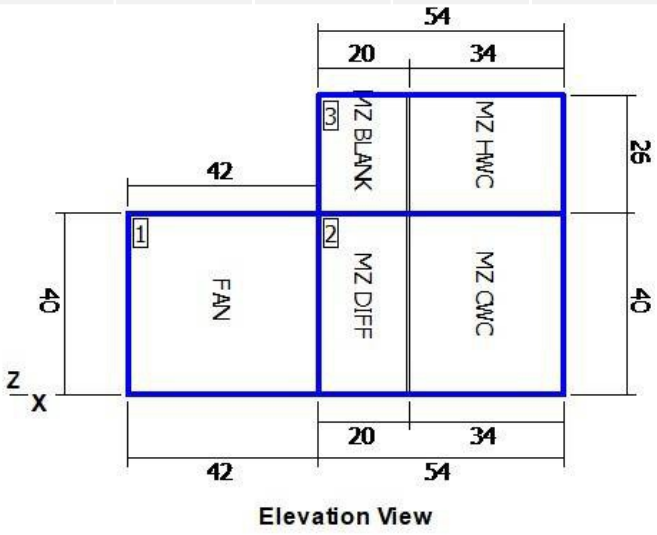

Elevation View

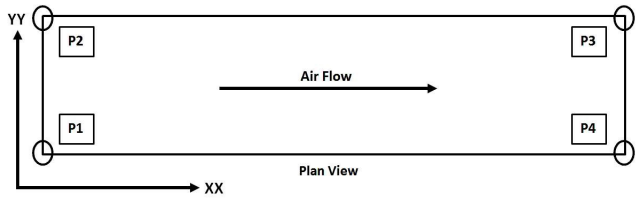

NOTE: Special components aren't included in the corner weights and center of gravity data.

Shipping Protection	None

Supply Static Pressure Drop

Component	Option	Static Pressure Drop
Supply Fan	Cabinet	
Multizone	Multizone	1.05 insWg
External Static	External Static	0.75 insWg
Total Supply Fan Static		1.80 insWg

Minimum Recommended Drain Pan Trap Dimensions

Shipping Section	Component	H
2	Chilled Water coil	1.18

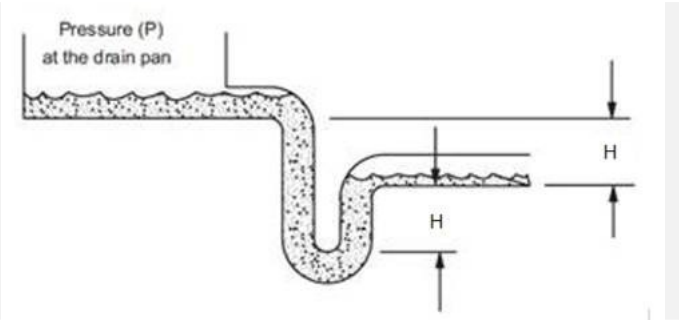

Dimensions provided as a courtesy and are recommended minimums only. Daikin is not responsible for supplying or designing drain pan traps and is not responsible for any damage caused by incorrect trap heights. The dimensions listed above should be reviewed and approved by a licensed plumbing professional.

This calculation is based on an assumption that 0.25 inches of the external static pressure is in the return duct and the remainder is in the supply duct. If actual conditions vary from this assumption then contact Applications for new trap height recommendations.

AHRI Certification

Certified by the AHRI Central Station Air-Handling Unit (AHU) Certification Program, which is based on AHRI Standard 430/431. AHRI certified units are subject to rigorous and continuous testing, have performance ratings independently measured and are third-party verified. Certified units may be found in the AHRI Directory at www.ahridirectory.org.

Notes

Standard
1. As a standalone component, unit meets or exceeds requirements of ASHRAE 90.1 - 2007. The approving authority is responsible for compliance of multi - component building systems.

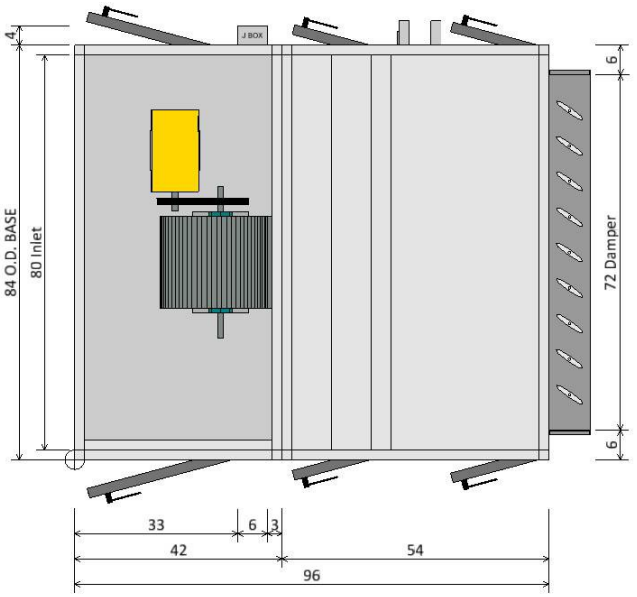

PLAN VIEW

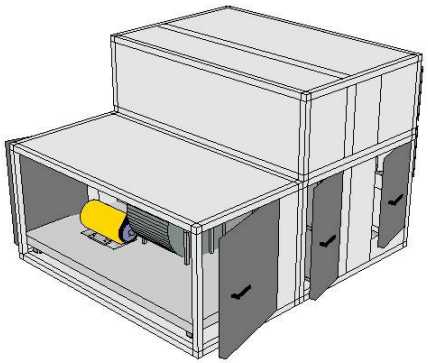

ISOMETRIC VIEW

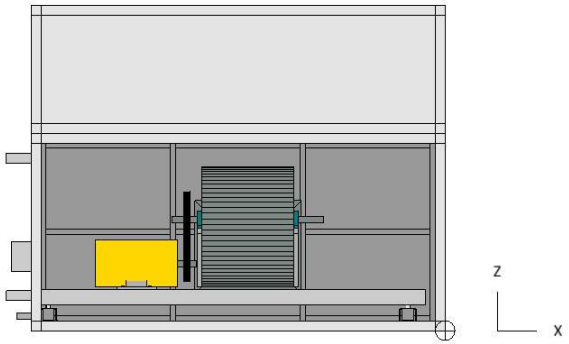

FRONT END VIEW

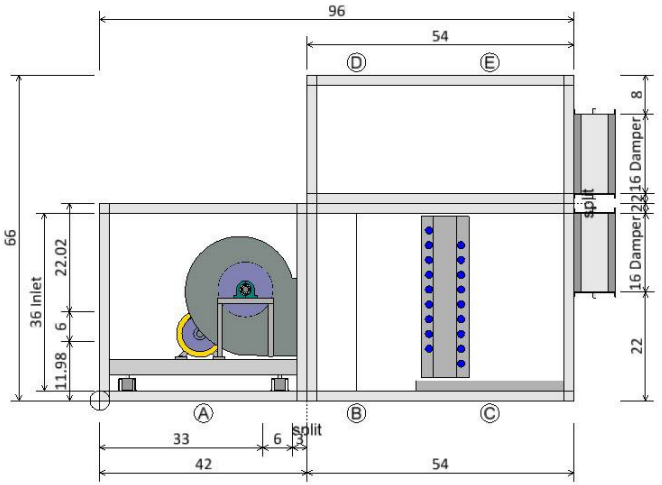

ELEVATION VIEW

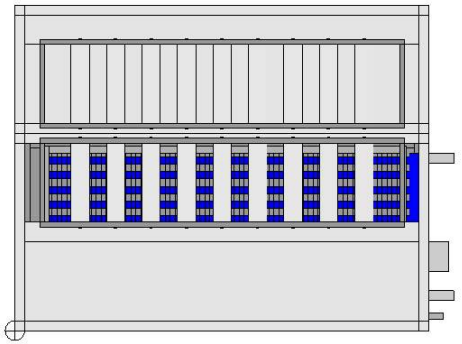

REAR END VIEW

Plan/Elevation	Unit Tag: AHU-10 (Klenk)			Sales Office: HTS Texas		
Product: Vision Air Handler	Project Name: Klein ISD Klenk ES AHU replacements			Sales Engineer:		
Model: CAH016GMAM	Jan. 17, 2026	Ver/Rev:	Sheet: 1 of 1	Scale: NTS	Tolerance: +/-0.25"	Dwg Units: in

DAIKIN
13600 Industrial Park Blvd, Minneapolis, MN 55441
www.DaikinApplied.com Software Version: 13.91

All opening dimensions have a 1" mounting flange along the inner edge. The actual airflow area of the opening is 2" smaller in each dimension.

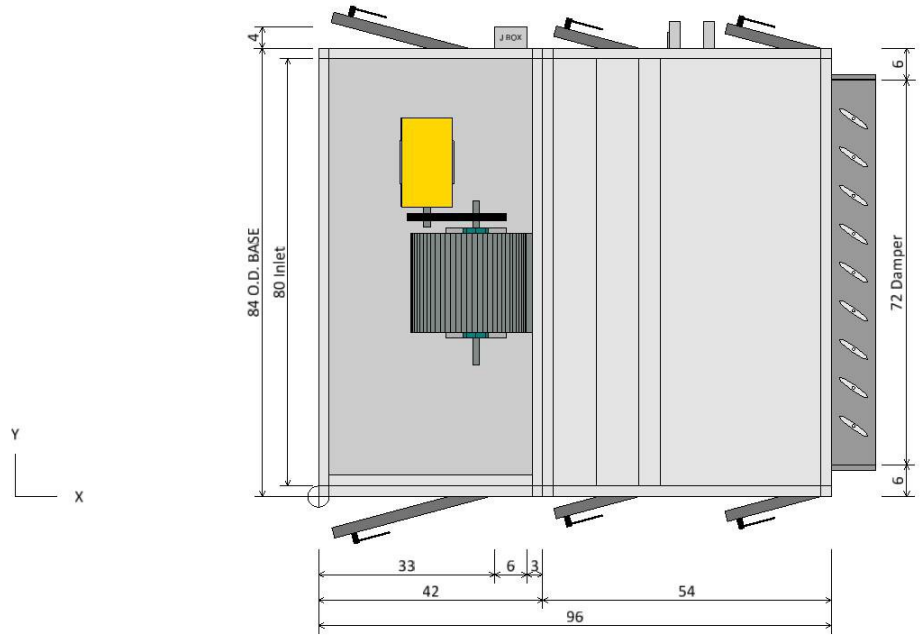

PLAN VIEW

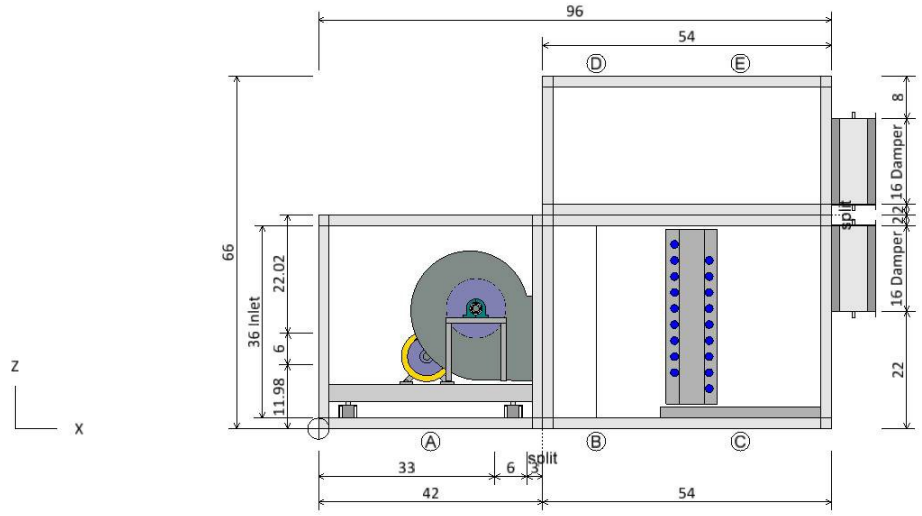

ELEVATION VIEW

Component Key		
Ⓐ	Supply Fan	
	Fan Type:	Centrifugal DWDI
	Fan Size (Class):	15 (2)
	Air Flowrate:	7260.0 cfm
	T.S.P:	1.8 insWg
	Motor Power:	10.0 HP
	Right Door (WxH):	30 ins x 36 ins
	Left Door (WxH):	26 ins x 36 ins
Ⓑ	Diffuser	
	Right Door (WxH):	16 ins x 36 ins
	Left Door (WxH):	16 ins x 36 ins
Ⓒ	Chilled Water coil	
	Coil Model:	5WS1206B
	Total Capacity:	281084.0 Btu/hr
	Right Door (WxH):	18 ins x 30 ins
	Left Door (WxH):	18 ins x 30 ins
Ⓓ	Access Section	
Ⓔ	Hot Water Coil	
	Coil Model:	5WH0001C
	Total Capacity:	0.0 Btu/hr

Plan/Elevation - No Ends	Unit Tag: AHU-10 (Klenk)			Sales Office: HTS Texas		
Product: Vision Air Handler	Project Name: Klein ISD Klenk ES AHU replacements			Sales Engineer:		
Model: CAH016GMAM	Jan. 17, 2026	Ver/Rev:	Sheet: 1 of 1	Scale: NTS	Tolerance: +/-0.25"	Dwg Units: in

DAIKIN
13600 Industrial Park Blvd, Minneapolis, MN 55441
www.DaikinApplied.com Software Version: 13.91

All opening dimensions have a 1" mounting flange along the inner edge. The actual airflow area of the opening is 2" smaller in each dimension.

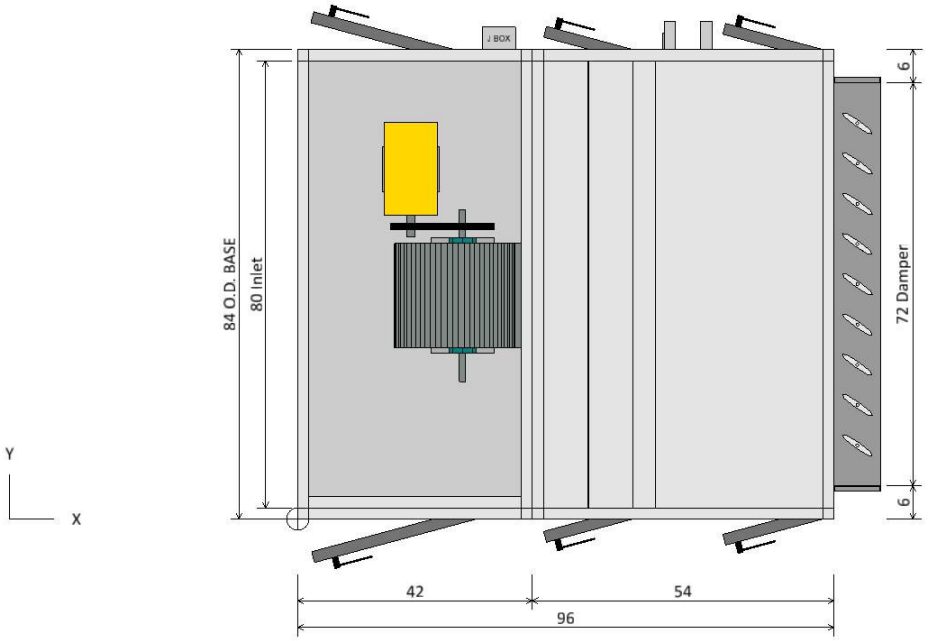

PLAN VIEW

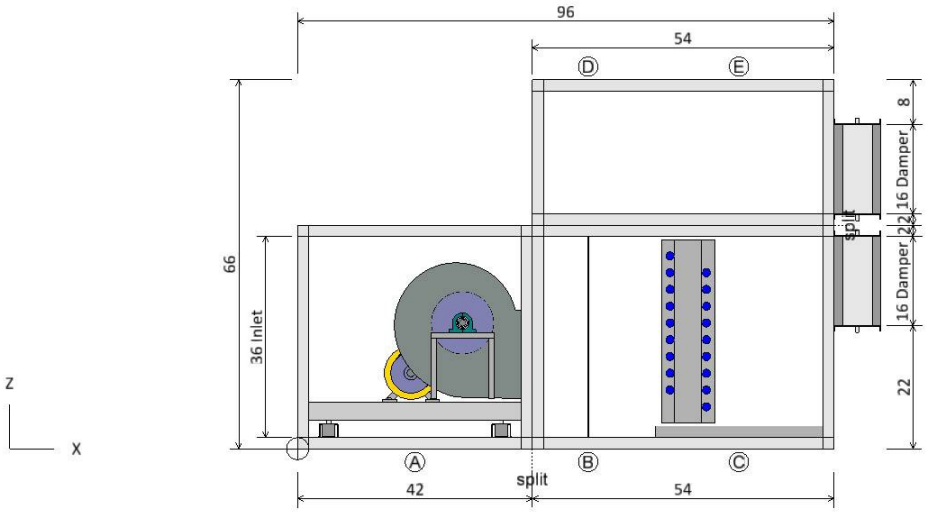

ELEVATION VIEW

Component Key

	Type	X	Y	Z	Wid	Hgt
Ⓐ	Supply Fan Opening	0.00	2.00	2.00	80.00	36.00
Ⓒ	Chilled Water coil MZ cold deck output	104.38	6.00	22.00	72.00	16.00
Ⓔ	Hot Water Coil MZ hot deck output	104.38	6.00	42.00	72.00	16.00

Note: Dimensions are measured from the origin point.
Note: Openings with or without dampers are recessed into the unit by approximately 1.75 in.

Opening/Damper Connections	Unit Tag: AHU-10 (Klenk)			Sales Office: HTS Texas		
Product: Vision Air Handler	Project Name: Klein ISD Klenk ES AHU replacements			Sales Engineer:		
Model: CAH016GMAM	Jan. 17, 2026	Ver/Rev:	Sheet: 1 of 1	Scale: NTS	Tolerance: +/-0.25"	Dwg Units: in

DAIKIN
13600 Industrial Park Blvd, Minneapolis, MN 55441
www.DaikinApplied.com Software Version: 13.91

All opening dimensions have a 1" mounting flange along the inner edge. The actual airflow area of the opening is 2" smaller in each dimension.

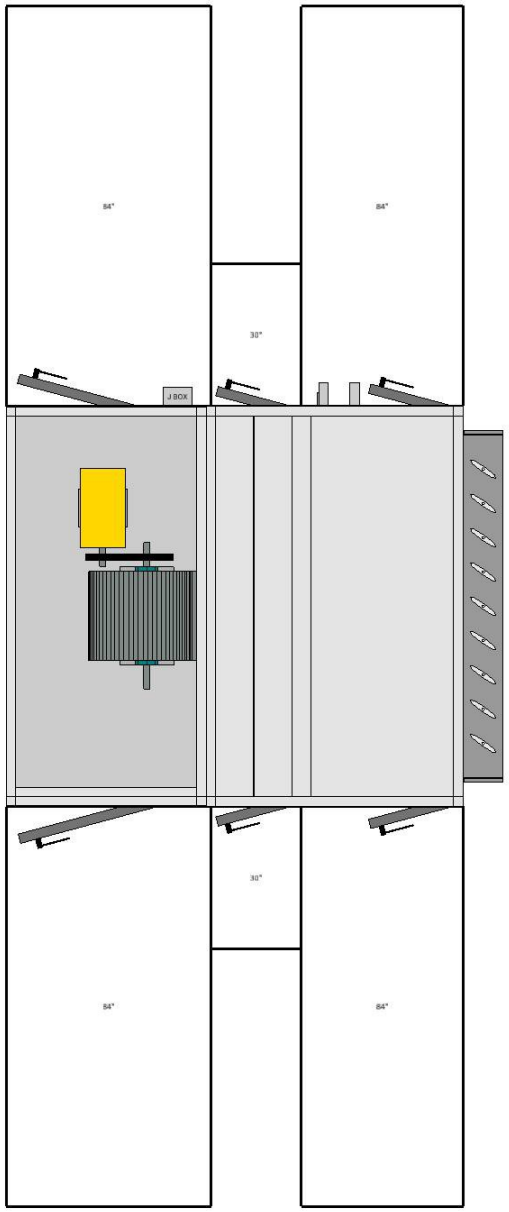

PLAN VIEW

Notes
Check local electrical component service clearance codes for specific distances. Access is only required on one side of the unit.

Service Clearance View	Unit Tag: AHU-10 (Klenk)			Sales Office: HTS Texas		
Product: Vision Air Handler	Project Name: Klein ISD Klenk ES AHU replacements			Sales Engineer:		
Model: CAH016GMAM	Jan. 17, 2026	Ver/Rev:	Sheet: 1 of 1	Scale: NTS	Tolerance: +/-0.25"	Dwg Units: in

DAIKIN
13600 Industrial Park Blvd, Minneapolis, MN 55441
www.DaikinApplied.com Software Version: 13.91

All opening dimensions have a 1" mounting flange along the inner edge. The actual airflow area of the opening is 2" smaller in each dimension.

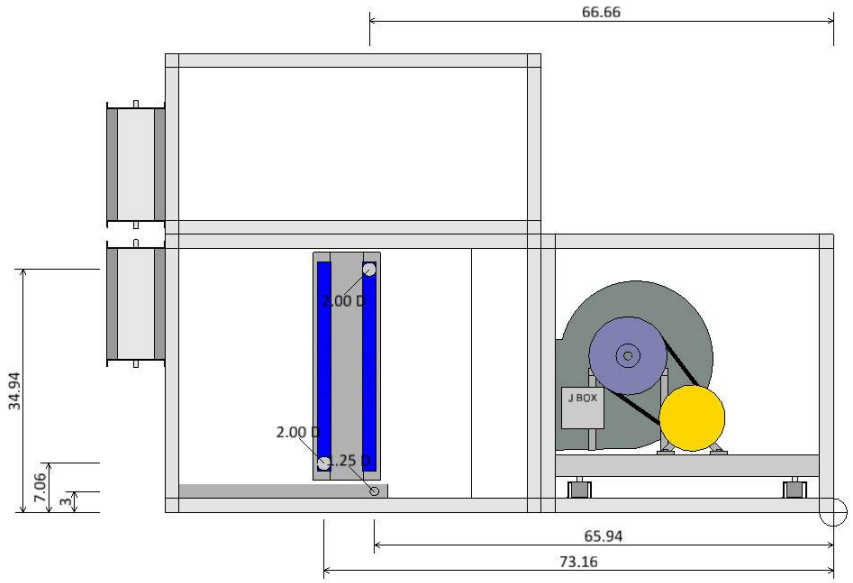

LEFT ELEVATION VIEW

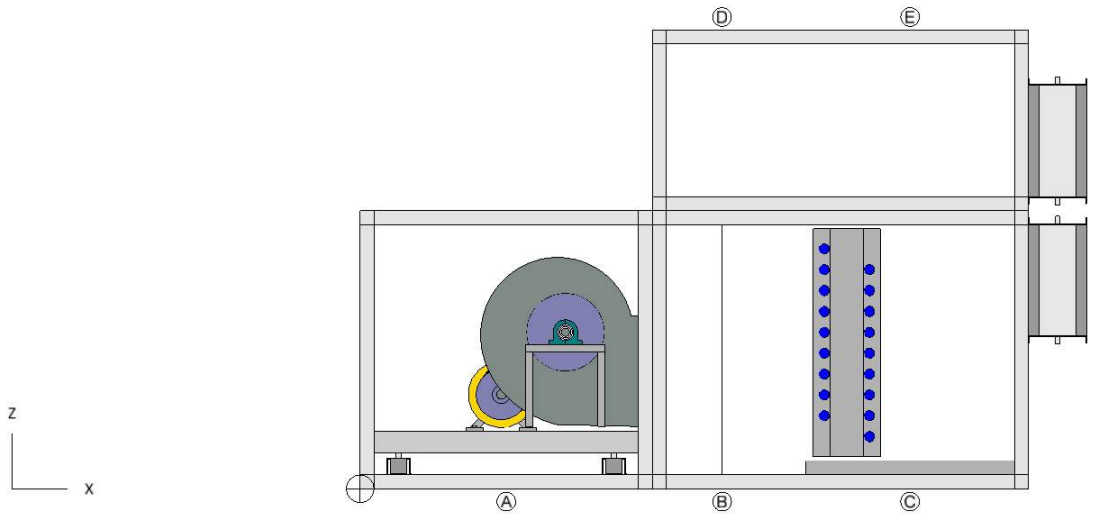

RIGHT ELEVATION VIEW

Coil and Drain Connections					
	Type	X	Y	Z	Diam
Ⓒ	Chilled Water coil Condensate drain conn: Cold water inlet: Cold water outlet:	 65.94 73.16 66.66	 86.90 91.00* 91.00*	 3.00 7.06 34.94	 1.25 2.00 2.00

Notes:
Dimensions are measured from the origin point.
* value varies +/- 1 in.

Coil and Drain Connections	Unit Tag: AHU-10 (Klenk)			Sales Office: HTS Texas		
Product: Vision Air Handler	Project Name: Klein ISD Klenk ES AHU replacements			Sales Engineer:		
Model: CAH016GMAM	Jan. 17, 2026	Ver/Rev:	Sheet: 1 of 1	Scale: NTS	Tolerance: +/-0.25"	Dwg Units: in

DAIKIN
13600 Industrial Park Blvd, Minneapolis, MN 55441
www.DaikinApplied.com Software Version: 13.91

All opening dimensions have a 1" mounting flange along the inner edge. The actual airflow area of the opening is 2" smaller in each dimension.

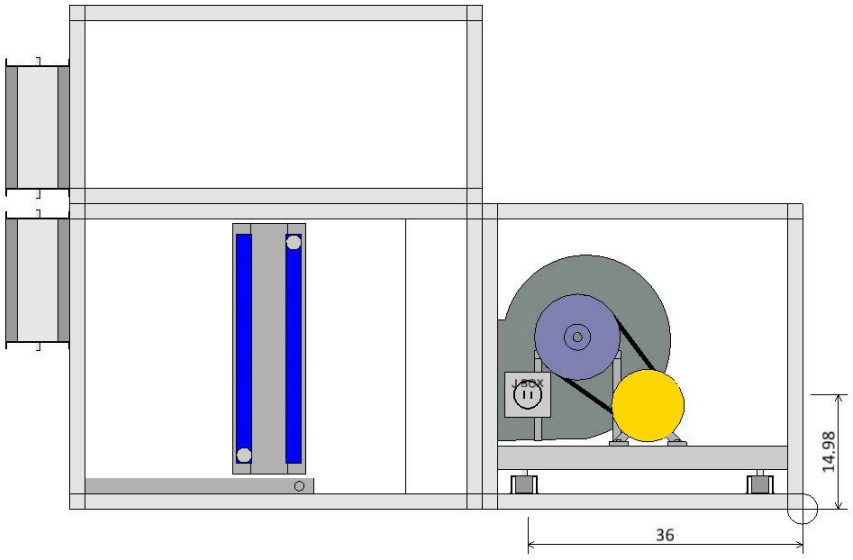

LEFT ELEVATION VIEW

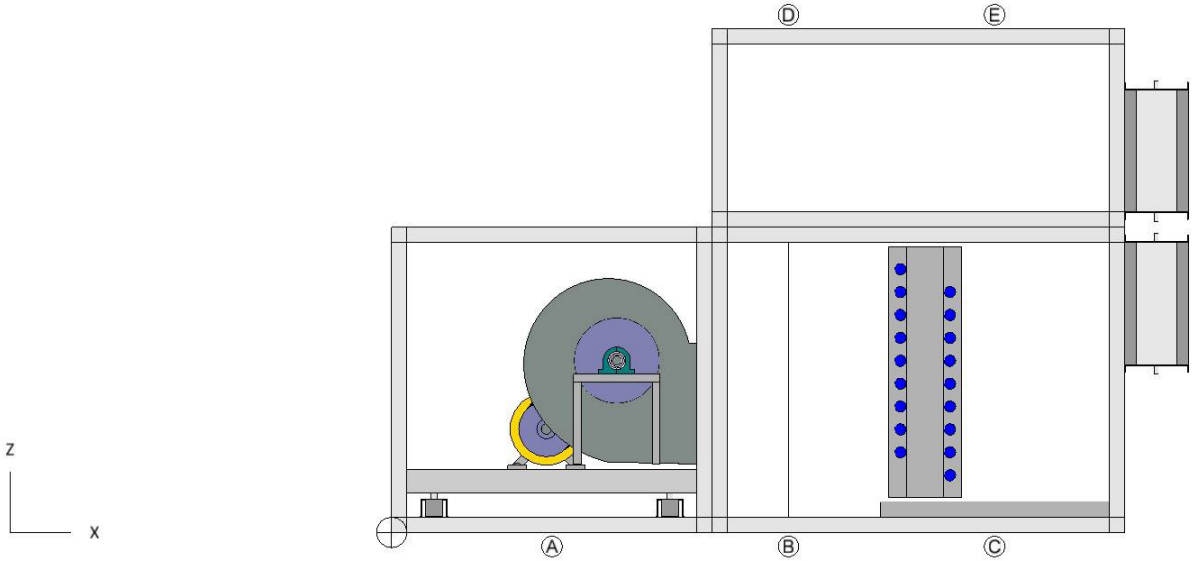

RIGHT ELEVATION VIEW

Component Key

	Type	X	Y	Z	Volts	Phase
Ⓐ	Supply Fan Fan	36.00	84.00	14.98	460	3

Note: Dimensions are measured from the origin point.

Electrical Connections	Unit Tag: AHU-10 (Klenk)			Sales Office: HTS Texas		
Product: Vision Air Handler	Project Name: Klein ISD Klenk ES AHU replacements			Sales Engineer:		
Model: CAH016GMAM	Jan. 17, 2026	Ver/Rev:	Sheet: 1 of 1	Scale: NTS	Tolerance: +/-0.25"	Dwg Units: in

DAIKIN
13600 Industrial Park Blvd, Minneapolis, MN 55441
www.DaikinApplied.com Software Version: 13.91

All opening dimensions have a 1" mounting flange along the inner edge. The actual airflow area of the opening is 2" smaller in each dimension.

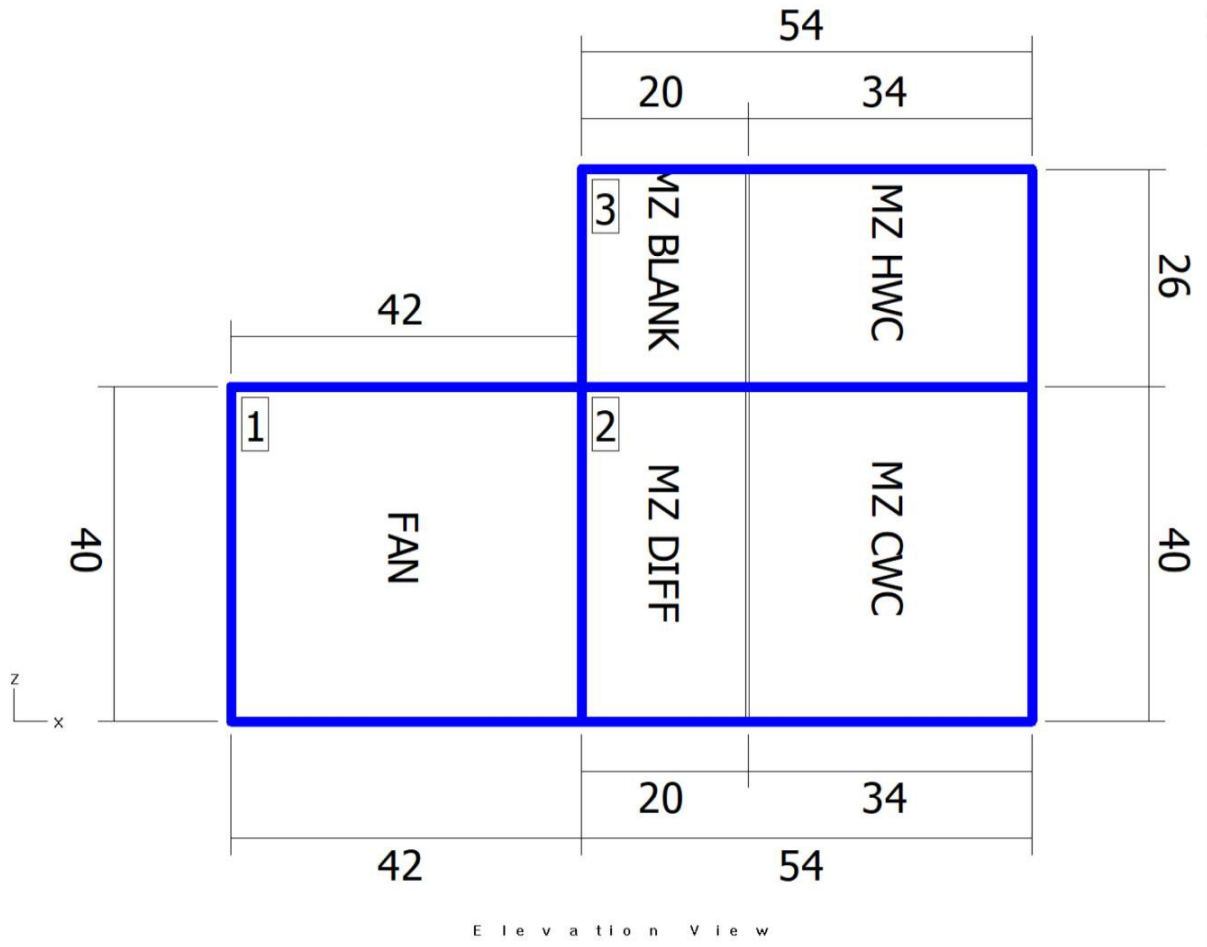

Elevation View

Shipping Sections				
Section	Weight (lb)	X	Y	Z
Section 1	961.15	42	84	40
Section 2	1084.20	54	84	40
Section 3	520.23	54	84	26
Total Unit	2565.58	96	84	66

Note: Base rails, curb ready base, coil connectors, drain connectors, and control boxes not included in height X, Y, Z dimensions.
Shipping section may be 2" longer in air flow direction due to internal splice joint.
Horizontal multizone section : Add 8.38" to section length if dampers are installed.

Shipping Sections	Unit Tag: AHU-10 (Klenk)			Sales Office: HTS Texas		
Product: Vision Air Handler	Project Name: Klein ISD Klenk ES AHU replacements			Sales Engineer:		
Model: CAH016GMAM	Jan. 17, 2026	Ver/Rev:	Sheet: 1 of 1	Scale: NTS	Tolerance: +/-0.25"	Dwg Units: in

DAIKIN
13600 Industrial Park Blvd, Minneapolis, MN 55441
www.DaikinApplied.com Software Version: 13.91

All opening dimensions have a 1" mounting flange along the inner edge. The actual airflow area of the opening is 2" smaller in each dimension.

Product Drawing	Unit Tag: AHU-10 (Klenk)			Sales Office: HTS Texas		
Product: Vision Air Handler	Project Name: Klein ISD Klenk ES AHU replacements			Sales Engineer:		
Model: CAH016GMAM	Jan. 17, 2026	Ver/Rev:	Sheet: 1 of 1	Scale: NTS	Tolerance: +/-0.25"	Dwg Units: in

DAIKIN
13600 Industrial Park Blvd, Minneapolis, MN 55441
www.DaikinApplied.com Software Version: 13.91

All opening dimensions have a 1" mounting flange along the inner edge. The actual airflow area of the opening is 2" smaller in each dimension.

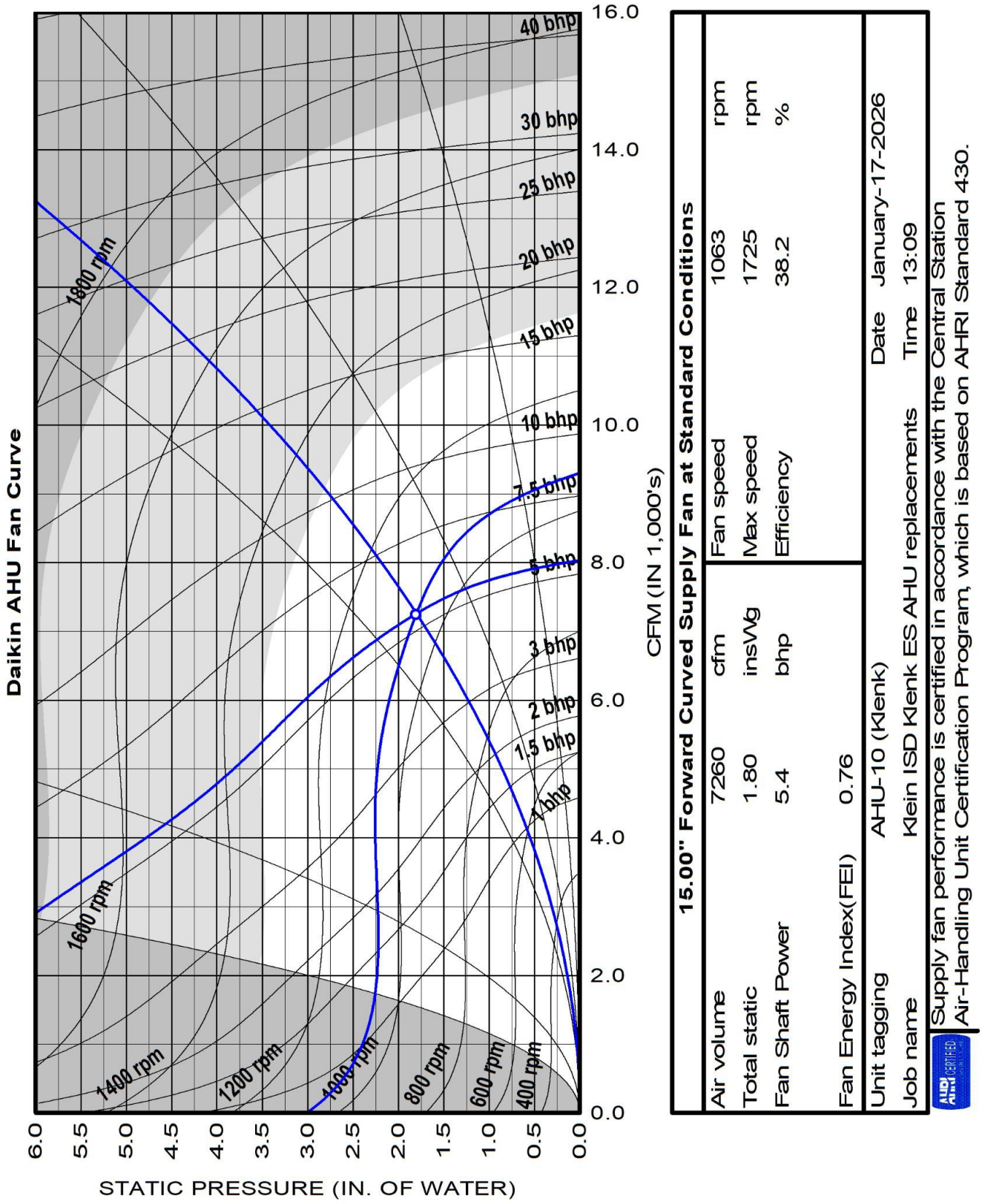
Daikin AHU Fan Curve
STATIC PRESSURE (IN. OF WATER)
CFM (IN 1,000's)
1800 rpm
1600 rpm
1400 rpm
1200 rpm
1000 rpm
800 rpm
600 rpm
400 rpm
40 bhp
30 bhp
25 bhp
20 bhp
15 bhp
10 bhp
7.5 bhp
5 bhp
3 bhp
2 bhp
1.5 bhp
1 bhp
15.00" Forward Curved Supply Fan at Standard Conditions
Air volume 7260 cfm
Total static 1.80 insWg
Fan Shaft Power 5.4 bhp
Fan Energy Index(FEI) 0.76
Fan speed 1063 rpm
Max speed 1725 rpm
Efficiency 38.2 %
Unit tagging AHU-10 (Klenk)
Date January-17-2026
Job name Klein ISD Klenk ES AHU replacements
Time 13:09
Supply fan performance is certified in accordance with the Central Station Air-Handling Unit Certification Program, which is based on AHRI Standard 430.

Job Information	Technical Data Sheet
Job Name	Klein ISD Klenk ES AHU replacements
Date	January 17 2026
Submitted By	Salas O'Brien
Software Version	13.91
Unit Tag	AHU-10 Filter

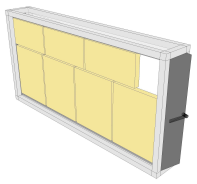

Unit Overview

Model Number	Supply					
	Air Volume cfm	Static Pressure		External Dimensions		
		External inWc	Total inWc	Height in	Width in	Length in
CAC017GVAM	7260	0.95	0.00	42*	84*	12

**Not including base rails, coil connectors, drain connectors and control boxes.*

Unit

Model Number:	CAC017GVAM		
Approval:	ETL Listed / ETL Listed to Canadian Safety Standards (ETL Label / ETLc Label)		
Outer Panel:	18 gauge G90 Galvanized Steel (unpainted)		
Liner:	24 gauge Galvanized Steel (unless noted per section)		
Insulation:	R-13 Injected Foam		
Unit Configuration:	Inline horizontal	**Drive (Handling) Location:**	Right
Base:	None	**Wall Thickness:**	2 in
Altitude:	0 ft	**Parts Warranty:**	Additional One Year, Two Year Total

Panel Filter

Component: 1 | Length: 12 in | Shipping Section: 1

Type	Efficiency	Nominal Face Velocity	Actual Face Velocity	Actual Face Area	Air Volume	Filter Loading
Pre Pleat	MERV 13	376 ft/min	401 ft/min	18.1 ft²	7260 cfm	Side

Air Pressure Drop				Number of Filters	Height	Width	Depth
Clean Air	Mean Air	Dirty Air	User Spec				
0.26 inWc	**0.63** inWc	1.00 inWc	N/A	4	24 in	20 in	2 in
				3	12 in	24 in	2 in

Door

Location	Drive Side Door Width	Opp. Drv. Side Door Width	Opening
Both sides	8 in	8 in	Outward

Unit Sound Power (dB)

Type	63 Hz	125 Hz	250 Hz	500 Hz	1000 Hz	2000 Hz	4000 Hz	8000 Hz
Radiated:	64	54	48	41	39	41	46	51
Unit Discharge:	64	54	48	41	39	41	46	51
Unit Return:	64	54	48	41	39	41	46	51

Shipping Section Details

Section	Length in	Weight lb	Corner Weights (lb)				Center of Gravity (in)		
			P1	P2	P3	P4	XX	YY	ZZ
1	12	186	46	46	46	46	6	42	21
Entire Unit	**12**	**186**	**46**	**46**	**46**	**46**	**6**	**42**	**21**

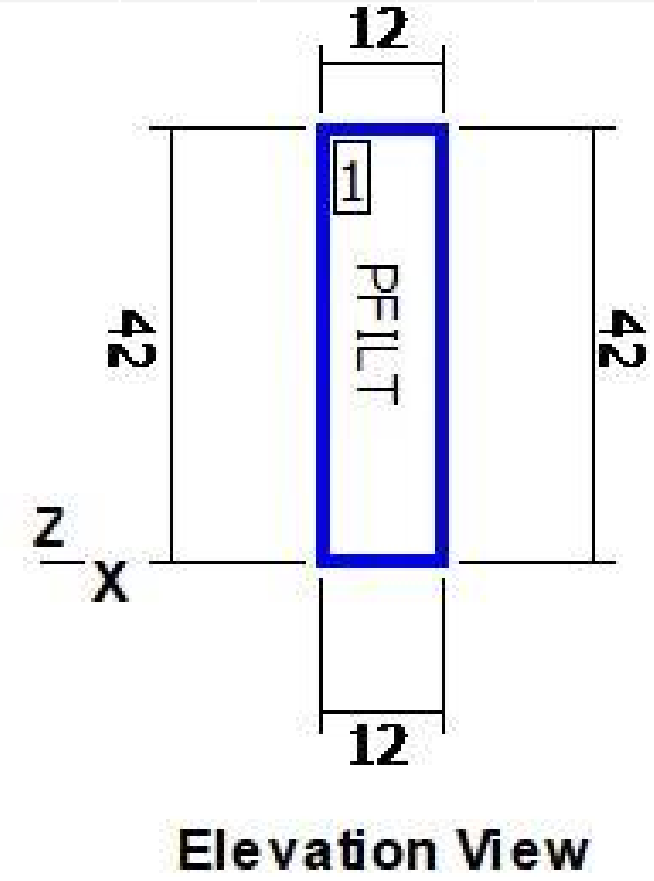

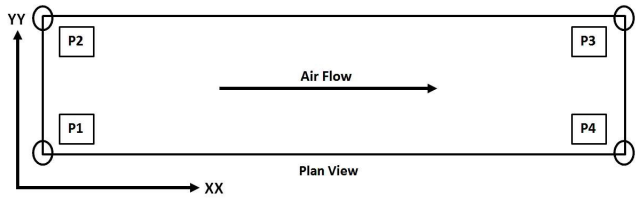

NOTE: Special components aren't included in the corner weights and center of gravity data.

Shipping Protection

None

Supply Static Pressure Drop

Component	Option	Static Pressure Drop
Panel Filter	Panel Filter	0.63 insWg
External Static	External Static	0.95 insWg
Total Supply Fan Static		

AHRI Certification

The air-handler is selected outside of the scope of AHRI Standard 430/431

Notes

Standard

1. As a standalone component, unit meets or exceeds requirements of ASHRAE 90.1 - 2007. The approving authority is responsible for compliance of multi - component building systems.

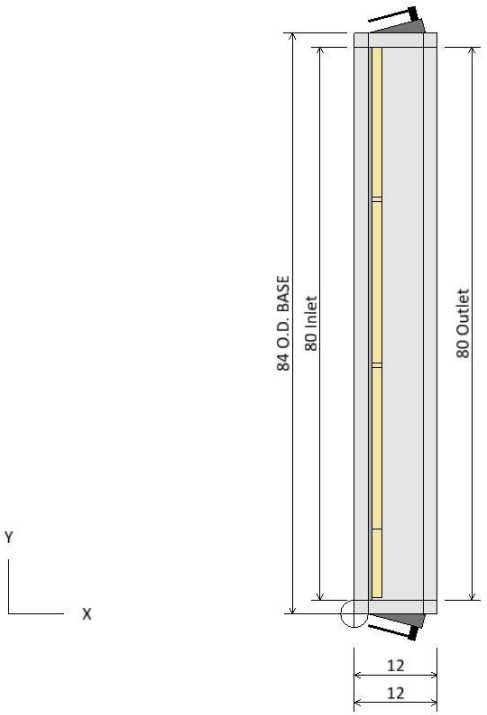

PLAN VIEW

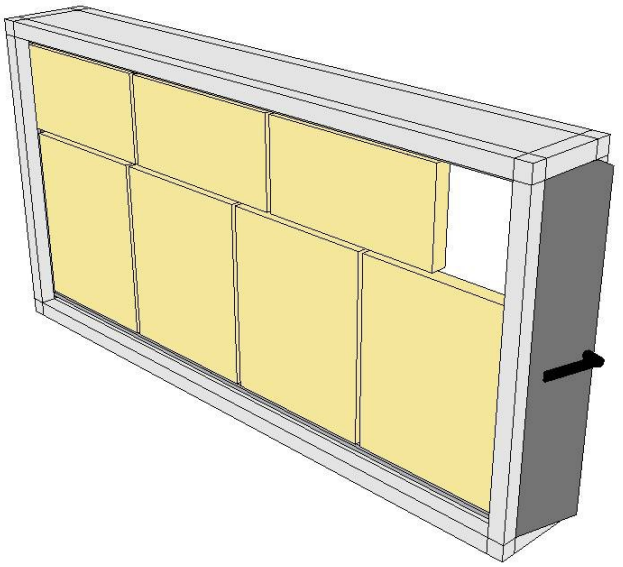

ISOMETRIC VIEW

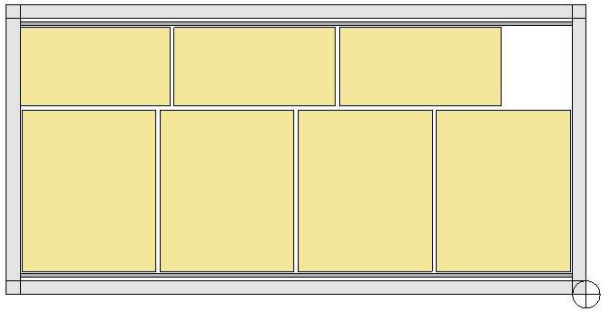

FRONT END VIEW

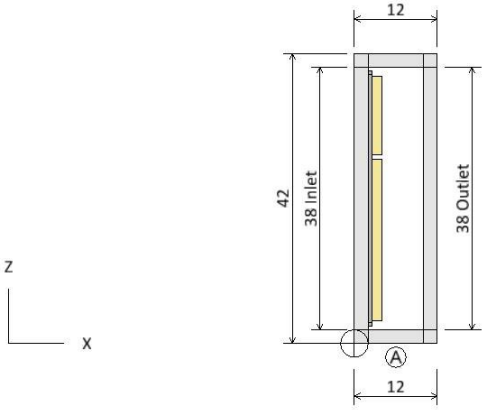

ELEVATION VIEW

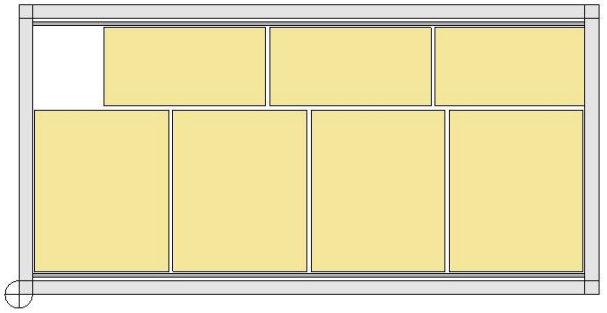

REAR END VIEW

Plan/Elevation	Unit Tag: AHU-10 Filter			Sales Office: HTS Texas		
Product: Vision Air Handler	Project Name: Klein ISD Klenk ES AHU replacements			Sales Engineer:		
Model: CAC017GVAM	Jan. 17, 2026	Ver/Rev:	Sheet: 1 of 1	Scale: NTS	Tolerance: +/-0.25"	Dwg Units: in

DAIKIN
13600 Industrial Park Blvd, Minneapolis, MN 55441
www.DaikinApplied.com Software Version: 13.91

All opening dimensions have a 1" mounting flange along the inner edge. The actual airflow area of the opening is 2" smaller in each dimension.

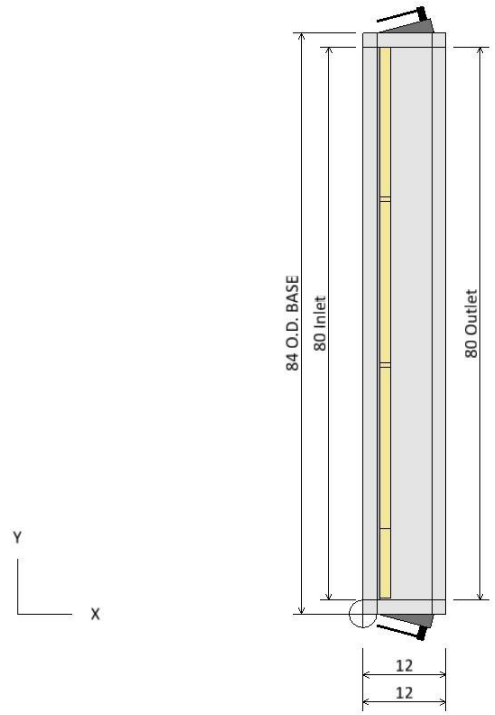

PLAN VIEW

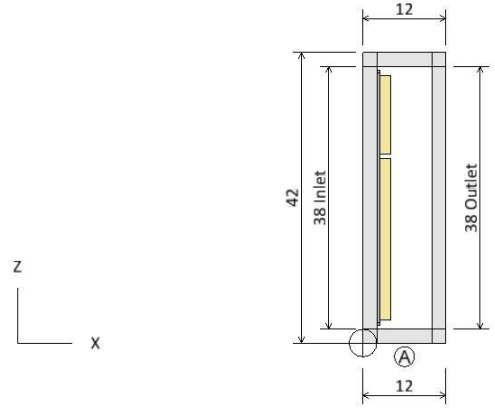

ELEVATION VIEW

Component Key		
Ⓐ	Panel Filter	
	Filter Type:	PrePleat (MERV 13)
	Right Door (WxH):	8 ins x 38 ins
	Left Door (WxH):	8 ins x 38 ins

Plan/Elevation - No Ends	Unit Tag: AHU-10 Filter			Sales Office: HTS Texas		
Product: Vision Air Handler	Project Name: Klein ISD Klenk ES AHU replacements			Sales Engineer:		
Model: CAC017GVAM	Jan. 17, 2026	Ver/Rev:	Sheet: 1 of 1	Scale: NTS	Tolerance: +/-0.25"	Dwg Units: in

DAIKIN
13600 Industrial Park Blvd, Minneapolis, MN 55441
www.DaikinApplied.com Software Version: 13.91

All opening dimensions have a 1" mounting flange along the inner edge. The actual airflow area of the opening is 2" smaller in each dimension.

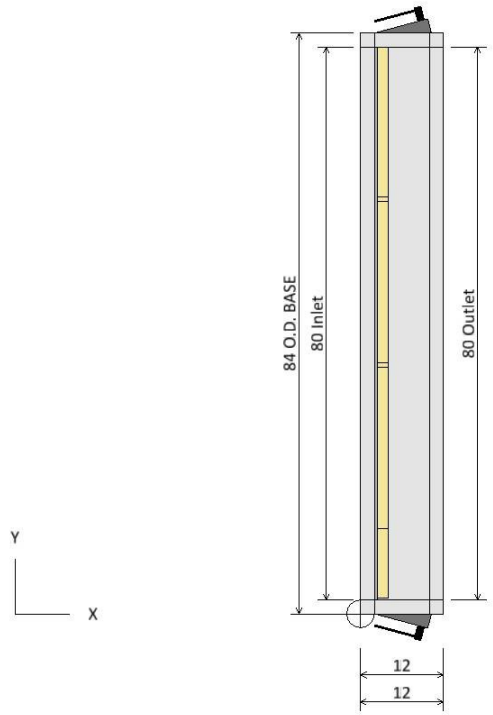

PLAN VIEW

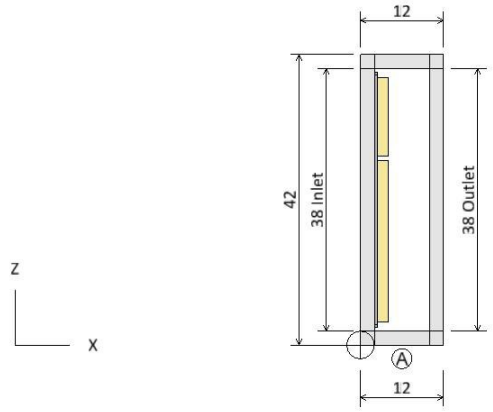

ELEVATION VIEW

Component Key

	Type	X	Y	Z	Wid	Hgt
Ⓐ	Panel Filter Opening	0.00	2.00	2.00	80.00	38.00
	Opening	12.00	2.00	2.00	80.00	38.00

Note: Dimensions are measured from the origin point.
Note: Openings with or without dampers are recessed int the unit by approximately 1.75 in.

Opening/Damper Connections	Unit Tag: AHU-10 Filter			Sales Office: HTS Texas		
Product: Vision Air Handler	Project Name: Klein ISD Klenk ES AHU replacements			Sales Engineer:		
Model: CAC017GVAM	Jan. 17, 2026	Ver/Rev:	Sheet: 1 of 1	Scale: NTS	Tolerance: +/-0.25"	Dwg Units: in

DAIKIN
13600 Industrial Park Blvd, Minneapolis, MN 55441
www.DaikinApplied.com Software Version: 13.91

All opening dimensions have a 1" mounting flange along the inner edge. The actual airflow area of the opening is 2" smaller in each dimension.

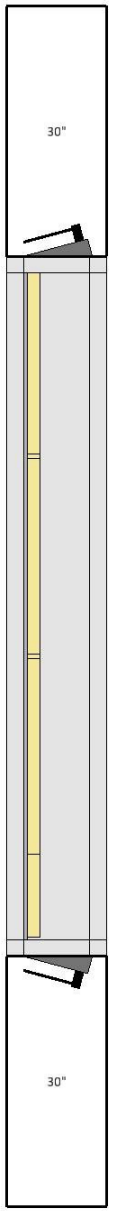

PLAN VIEW

Notes
Check local electrical component service clearance codes for specific distances. Access is only required on one side of the unit.

Service Clearance View	Unit Tag: AHU-10 Filter			Sales Office: HTS Texas		
Product: Vision Air Handler	Project Name: Klein ISD Klenk ES AHU replacements			Sales Engineer:		
Model: CAC017GVAM	Jan. 17, 2026	Ver/Rev:	Sheet: 1 of 1	Scale: NTS	Tolerance: +/-0.25"	Dwg Units: in

DAIKIN
13600 Industrial Park Blvd, Minneapolis, MN 55441
www.DaikinApplied.com Software Version: 13.91

All opening dimensions have a 1" mounting flange along the inner edge. The actual airflow area of the opening is 2" smaller in each dimension.

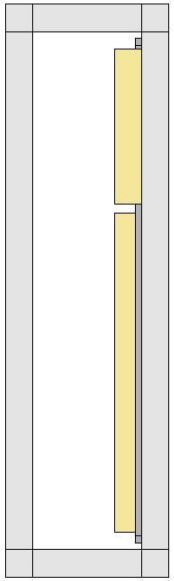

LEFT ELEVATION VIEW

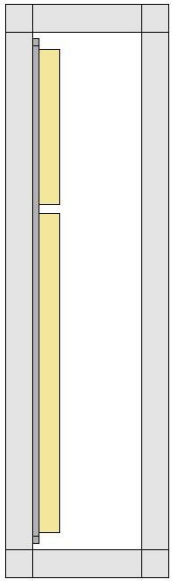

RIGHT ELEVATION VIEW

Coil and Drain Connections

Note: Dimensions are measured from the origin point.

Coil and Drain Connections	Unit Tag: AHU-10 Filter			Sales Office: HTS Texas		
Product: Vision Air Handler	Project Name: Klein ISD Klenk ES AHU replacements			Sales Engineer:		
Model: CAC017GVAM	Jan. 17, 2026	Ver/Rev:	Sheet: 1 of 1	Scale: NTS	Tolerance: +/-0.25"	Dwg Units: in

DAIKIN
13600 Industrial Park Blvd, Minneapolis, MN 55441
www.DaikinApplied.com Software Version: 13.91

All opening dimensions have a 1" mounting flange along the inner edge. The actual airflow area of the opening is 2" smaller in each dimension.

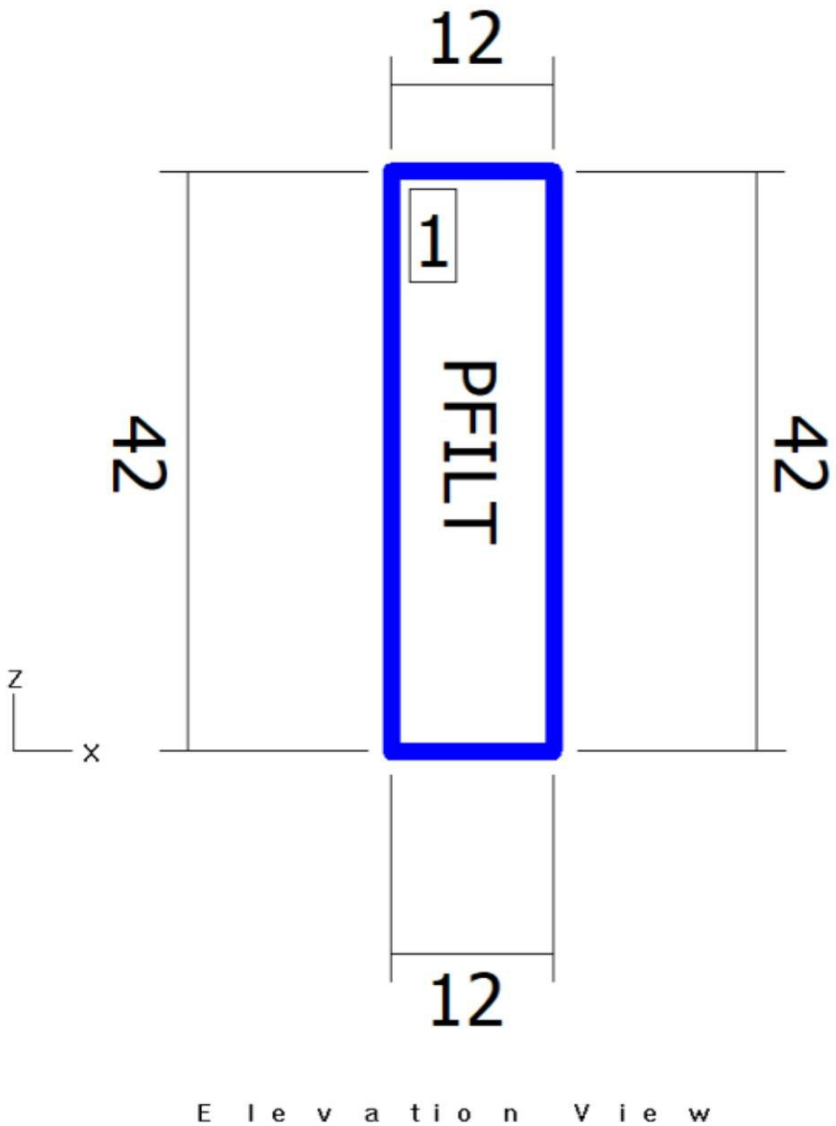

Elevation View

Shipping Sections				
Section	Weight (lb)	X	Y	Z
Section 1	185.70	12	84	42
Total Unit	185.70	12	84	42

Note: Base rails, curb ready base, coil connectors, drain connectors, and control boxes not included in height X, Y, Z dimensions.
Shipping section may be 2" longer in air flow direction due to internal splice joint.

Shipping Sections	Unit Tag: AHU-10 Filter			Sales Office: HTS Texas		
Product: Vision Air Handler	Project Name: Klein ISD Klenk ES AHU replacements			Sales Engineer:		
Model: CAC017GVAM	Jan. 17, 2026	Ver/Rev:	Sheet: 1 of 1	Scale: NTS	Tolerance: +/-0.25"	Dwg Units: in

DAIKIN
13600 Industrial Park Blvd, Minneapolis, MN 55441
www.DaikinApplied.com Software Version: 13.91

All opening dimensions have a 1" mounting flange along the inner edge. The actual airflow area of the opening is 2" smaller in each dimension.

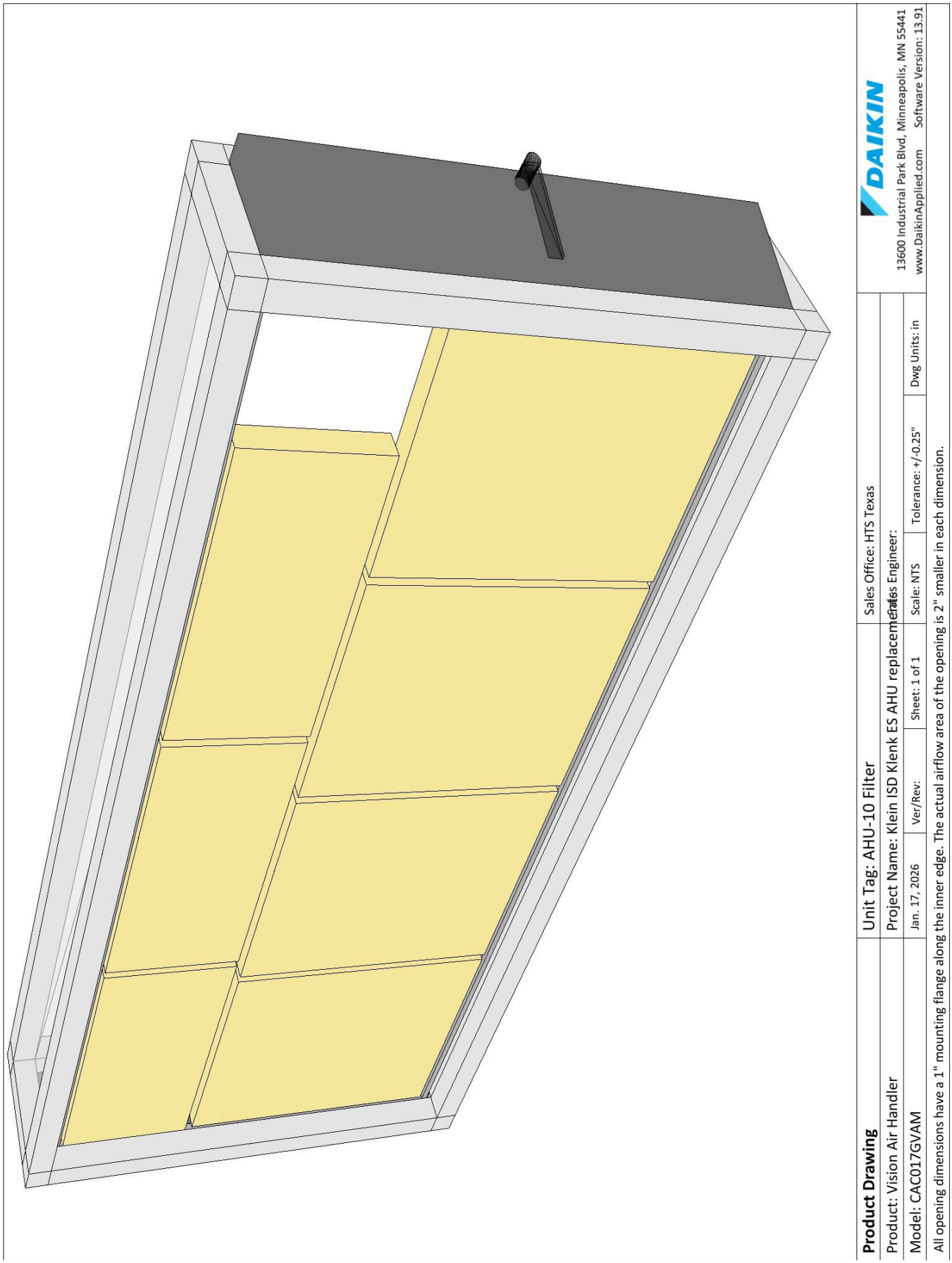

Product Drawing	Unit Tag: AHU-10 Filter	Sales Office: HTS Texas
Product: Vision Air Handler	Project Name: Klein ISD Klenk ES AHU replacement	Sales Engineer:
Model: CAC017GVAM	Jan. 17, 2026 | Ver/Rev: | Sheet: 1 of 1 | Scale: NTS | Tolerance: +/-0.25" | Dwg Units: in	

DAIKIN
13600 Industrial Park Blvd, Minneapolis, MN 55441
www.DaikinApplied.com Software Version: 13.91

All opening dimensions have a 1" mounting flange along the inner edge. The actual airflow area of the opening is 2" smaller in each dimension.

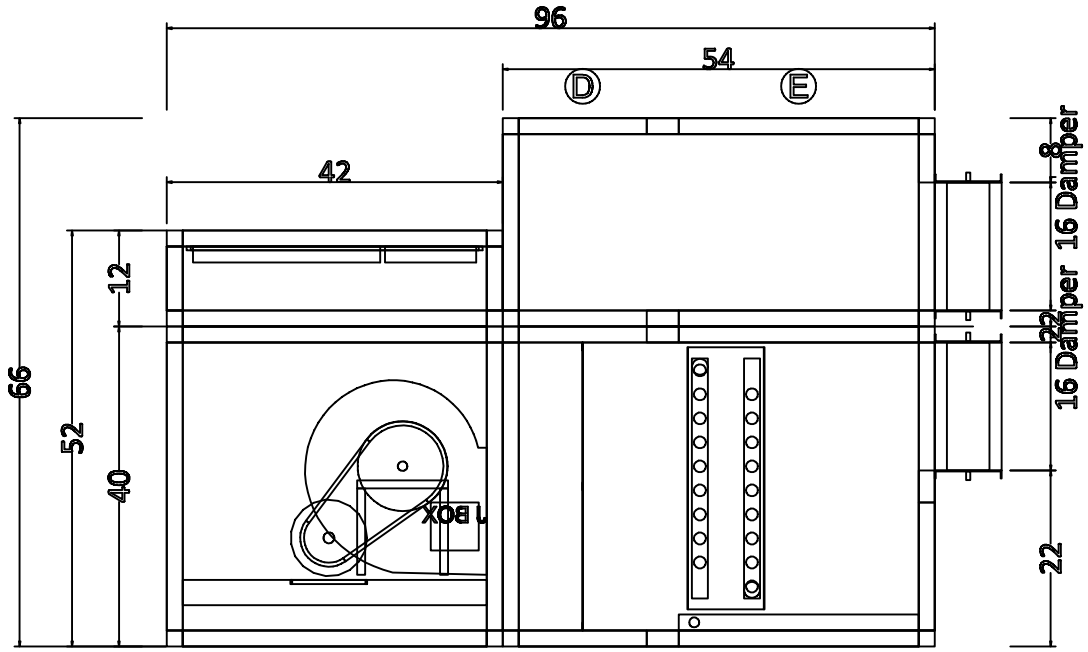

ELEVATION VIEW

Plan/Elevation - No Ends	Unit Tag: AHU-10 (Klenk)			Sales Office: HTS Texas			DAIKIN 13600 Industrial Park Blvd, Minneapolis, MN 55441 www.DaikinApplied.com Software Version: 13.91
Product: Vision Air Handler	Project Name: Klein ISD Klenk ES AHU replacements			Sales Engineer:			
Model: CAH016GMAM	Jan. 17, 2026	Ver/Rev:	Sheet: 1 of 1	Scale: NTS	Tolerance: +/-0.25"	Dwg Units: in	

All opening dimensions have a 1" mounting flange along the inner edge. The actual airflow area of the opening is 2" smaller in each dimension.

Job Information	Technical Data Sheet
Job Name	Klein ISD Klenk ES AHU replacements
Date	January 17 2026
Submitted By	Salas O'Brien
Software Version	13.82
Unit Tag	AHU-11 (Klenk)

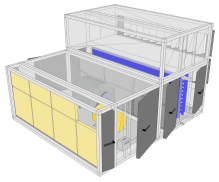

Unit Overview

Model Number	Supply					
	Air Volume cfm	Static Pressure		External Dimensions		
		External inWc	Total inWc	Height in	Width in	Length in
CAH020GMAM	9310	0.75	2.40	42*	96*	110

**Not including base rails, coil connectors, drain connectors and control boxes.*

Unit

Model Number:	CAH020GMAM		
Approval:	ETL Listed / ETL Listed to Canadian Safety Standards (ETL Label / ETLc Label)		
Outer Panel:	18 gauge G90 Galvanized Steel (unpainted)		
Liner:	24 gauge Galvanized Steel (unless noted per section)		
Insulation:	R-13 Injected Foam		
Sound Baffles:	Included in Fan, Plenum, Access and Manual section (unless noted per section)		
Unit Configuration:	Multizone	**Drive (Handling) Location:**	Right
Base:	None	**Wall Thickness:**	2 in
Altitude:	0 ft	**Parts Warranty:**	Additional One Year, Two Year Total

Panel Filter

Component: 1 | Length: 12 in | Shipping Section: 1

Type	Efficiency	Nominal Face Velocity	Actual Face Velocity	Actual Face Area	Air Volume	Filter Loading
Pre Pleat	MERV 13	436 ft/min	464 ft/min	20.1 ft²	9310 cfm	Side

Air Pressure Drop				Number of Filters	Height	Width	Depth
Clean Air	Mean Air	Dirty Air	User Spec				
0.32 inWc	**0.66** inWc	1.00 inWc	N/A	3	24 in	24 in	2 in
				1	24 in	20 in	2 in
				3	12 in	24 in	2 in

Door

Location	Drive Side Door Width	Opp. Drv. Side Door Width	Opening
Both sides	8 in	8 in	Outward

Supply Fan

Component: 2 | Length: 42 in | Shipping Section: 2

Fan Performance

Air Volume	Static Pressure			Fan Energy Index(FEI)	Total Input Power	Fan Shaft Power	Fan Wheel Speed		Outlet Velocity
	External	Total	Cabinet				Operating	Maximum	
9310 cfm	0.75 inWc	2.40 inWc	0.00 inWc	0.63	9.6 kW	10.51 BHP	1283 rpm	1725 rpm	4498 ft/min

Fan Data

Fan Type	Blade Type / Class	Quantity of Fans	Wheel Diameter	Number of Blades	Discharge	Motor Location
Centrifugal DWDI	Forward Curved / 2	1	15.00 in	N/A	Bottom horizontal	To Side of Fan

Motor Data

Power	Electrical Supply	Speed	Efficiency	Enclosure	Frame Size	Supplier	Number of Poles	Lock Rotor Current	Full Load Current
15.0 HP	460/60/3 V/Hz/Phase	1750 rpm	Premium	TEFC	254 T frame	Generic	4	126.06 A	18.10 A

Fan Options

Shaft Grounding Kit:	Provided	**Isolator Type:**	Spring

Drive Package Data*

Fan Sheave	Motor Sheave	Belt	Number of Belts	Actual Drive S.F.	Bearing Type
2BK90H	2B5V62	BX42	2	1.33	Standard - L50 (200K)

**Daikin Applied reserves the right to provide a different but equivalent drive package*

VFD/Starter/Disconnect Data

Selection Type:	External J-Box	**Vendor:**	Factory Standard
Voltage:	460 V	**Height x Width x Depth:**	6.00 in x 6.00 in x 4.00 in
Mounting:	Door Side	**Enclosure:**	NEMA 1

Door

Location	Drive Side Door Width	Opp. Drv. Side Door Width	Opening
Both sides	26 in	30 in	Outward

Special Options

Sound Baffle

Sound baffle included

Two Deck Multizone	Component: 3	Length: 56 in	Shipping Section: 3 & 4

Discharge Location	Number of Zones	Multizone APD*	Damper Type	Actuation
Horizontal / Horizontal	11	1.00 inWc	Low leak / Low leak	None - damper mechanically linked

Note : includes coil & balance plate & diffuser

Note : Cabinet height for multizone extends 28 inches above 'External cabinet height' referenced above.
The damper assembly will add 8.38 inches to the cabinet length for horizontal discharge and 8.38 inches to the height for vertical discharge.

Cold Deck Coil

Coil Model	Total Capacity	Sensible Capacity	Number of Coils	Number of Rows	Fins per Inch	Tube Diameter	Tube Spacing (Face x Row)
5WS1106B	351922 Btu/hr	257967 Btu/hr	1	6	11	0.625 in	1.50 in X 1.299 in

Coil Operating Weight	Coil Dry Weight
504 lb	376 lb

Air Volume	Air Temperature				Coil Air Pressure Drop	Finned Height	Finned Length	Face Area	Face Velocity
	Entering		Leaving						
	Dry Bulb	Wet Bulb	Dry Bulb	Wet Bulb					
9310 cfm	77.5 °F	64.6 °F	52.2 °F	51.7 °F	0.77 inWc	33 in	83 in	19.02 ft²	489 ft/min

Water

Entering	Leaving	Flow Rate	Pressure Drop	Velocity	Fluid Volume	Fluid Weight
45.0 °F	52.9 °F	89.40 gpm	12.10 ftHd	4.40 ft/s	15.0 gal	128.00 lb

Connection [Data Per Coil]				Min. Fin Surface Temp.	Min. Tube Wall Surface Temp.	Fouling Factor
Type	Size	Location	Material			
Threaded	2.50 in	Drive side	Carbon steel	45.0 °F	45.0 °F	0.000

Material				Drain Pan	Drain Side	Electro-Fin Coat	Moisture Eliminator
Fin	Tube	Header	Case				
Aluminum .0075 in	Copper .020 in	Copper	Stainless steel	Stainless steel	Drive side	NA	NA

AHRI 410 Certification

Certified in accordance with the AHRI Forced-Circulation Air-Cooling and Air-Heating Coils Certification Program which is based on AHRI Standard 410 within the Range of Standard Rating Conditions listed in Table 1 of the Standard. Certified units may be found in the AHRI Directory at www.ahridirectory.org

Future Hot Deck Coil(56 ins)

Number of Coils	Number of Rows
1	1

Coil Air Pressure Drop	Finned Height	Finned Width	Face Area	Face Velocity
NA inWc	18 in	80 in	10.00 ft²	931 ft/min

Connection Location	Connection Material
Drive side	Carbon steel

Coil Model	Drain Pan	Drain Pan Side
Future Coil (Not Supplied)	NA	NA

AHRI 410 Certification

Coil is NOT certified by AHRI

Door

Location	Drive Side Door Width	Opp. Drv. Side Door Width	Opening
Both sides	18 in	18 in	Outward

Unit Sound Power (dB)

Type	63 Hz	125 Hz	250 Hz	500 Hz	1000 Hz	2000 Hz	4000 Hz	8000 Hz
Radiated:	87	89	81	76	73	63	53	51
Unit Discharge:	97	99	99	97	95	91	91	86
Unit Return:	93	95	95	93	91	87	87	82

Shipping Section Details

Section	Length in	Weight lb	Corner Weights (lb)				Center of Gravity (in)		
			P1	P2	P3	P4	XX	YY	ZZ
1	12	232	50	50	66	66	7	48	21
2	42	1163	383	257	221	347	20	38	18
3	56	1255	275	259	353	369	32	47	18
4	56	602	264	249	239	254	27	47	15
Entire Unit	**110**	**3252**	**884**	**727**	**967**	**1124**	**62**	**44**	**29**

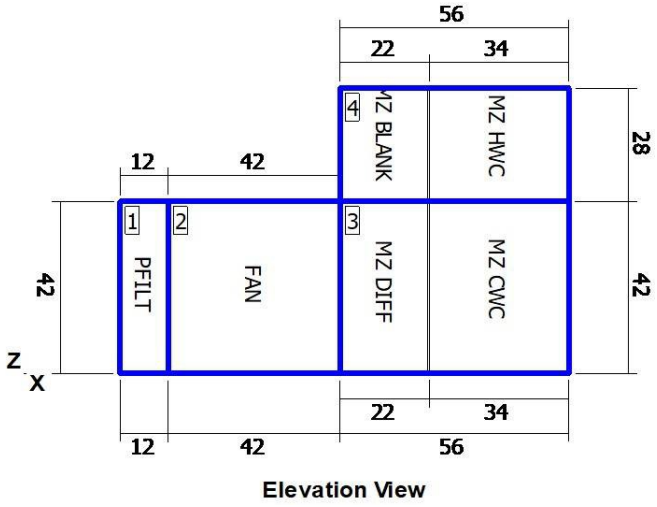

Elevation View

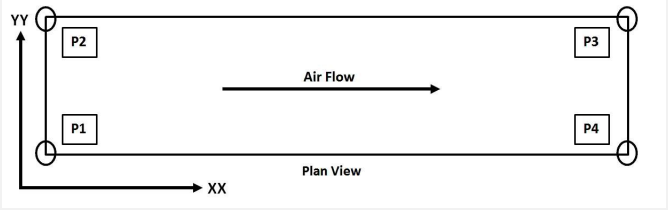

NOTE: Special components aren't included in the corner weights and center of gravity data.

Shipping Protection

None

Supply Static Pressure Drop

Component	Option	Static Pressure Drop
Panel Filter	Panel Filter	0.66 insWg
Supply Fan	Cabinet	
Multizone	Multizone	1.00 insWg
External Static	External Static	0.75 insWg
Total Supply Fan Static		2.40 insWg

Minimum Recommended Drain Pan Trap Dimensions

Shipping Section	Component	H
3	Chilled Water coil	1.16

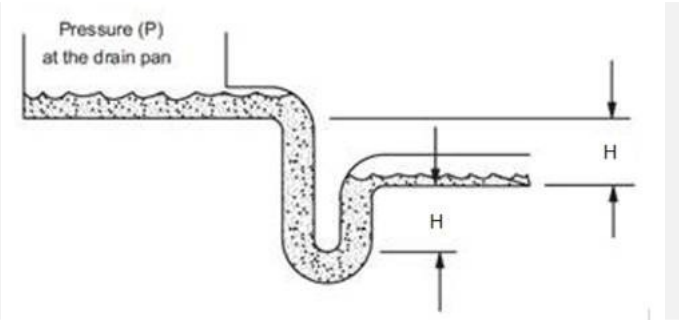

Dimensions provided as a courtesy and are recommended minimums only. Daikin is not responsible for supplying or designing drain pan traps and is not responsible for any damage caused by incorrect trap heights. The dimensions listed above should be reviewed and approved by a licensed plumbing professional.

This calculation is based on an assumption that 0.25 inches of the external static pressure is in the return duct and the remainder is in the supply duct. If actual conditions vary from this assumption then contact Applications for new trap height recommendations.

AHRI Certification

Certified by the AHRI Central Station Air-Handling Unit (AHU) Certification Program, which is based on AHRI Standard 430/431. AHRI certified units are subject to rigorous and continuous testing, have performance ratings independently measured and are third-party verified. Certified units may be found in the AHRI Directory at www.ahridirectory.org.

Notes

Standard
1. As a standalone component, unit meets or exceeds requirements of ASHRAE 90.1 - 2007. The approving authority is responsible for compliance of multi - component building systems.

51MN4W

Klein ISD Klenk ES AHU rep

177

1/17/2026

AHU-11 (Klenk)

Drawing

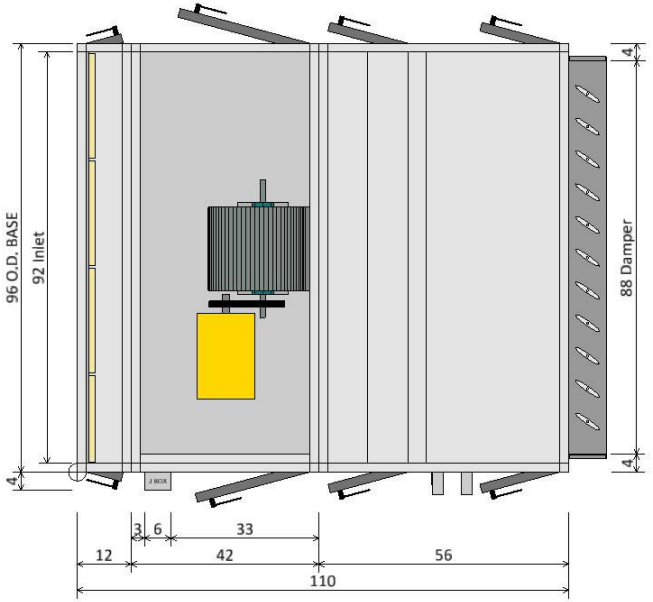

PLAN VIEW

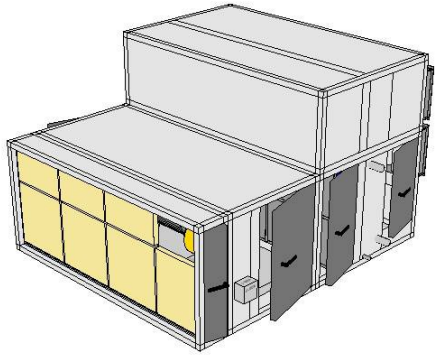

ISOMETRIC VIEW

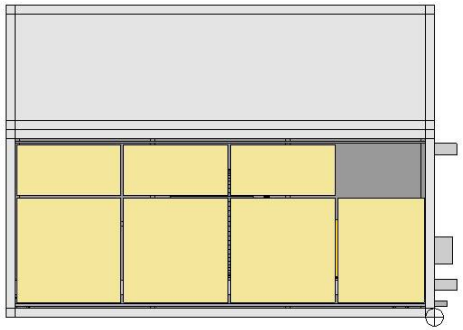

FRONT END VIEW

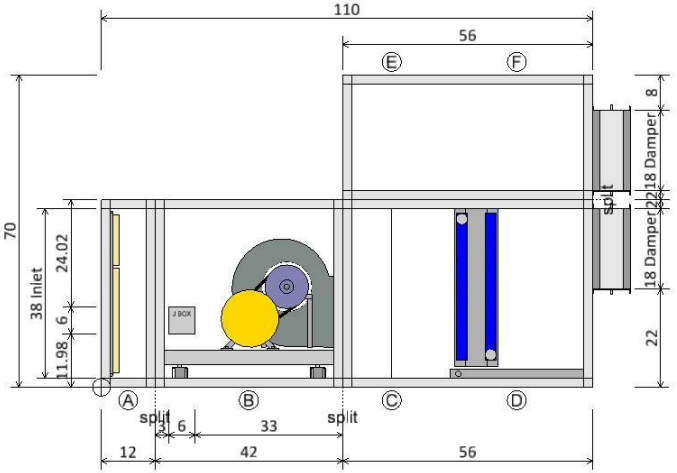

ELEVATION VIEW

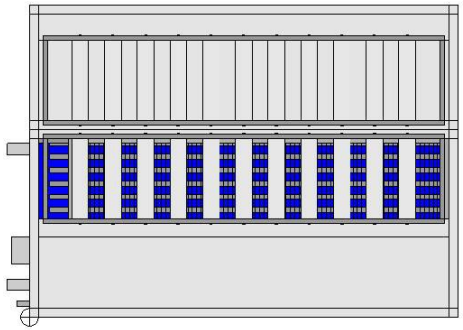

REAR END VIEW

Plan/Elevation	Unit Tag: AHU-11 (Klenk)			Sales Office: HTS Texas		
Product: Vision Air Handler	Project Name: Klein ISD Klenk ES AHU replacements			Sales Engineer:		
Model: CAH020GMAM	Jan. 17, 2026	Ver/Rev:	Sheet: 1 of 1	Scale: NTS	Tolerance: +/-0.25"	Dwg Units: in

DAIKIN
13600 Industrial Park Blvd, Minneapolis, MN 55441
www.DaikinApplied.com Software Version: 13.91

All opening dimensions have a 1" mounting flange along the inner edge. The actual airflow area of the opening is 2" smaller in each dimension.

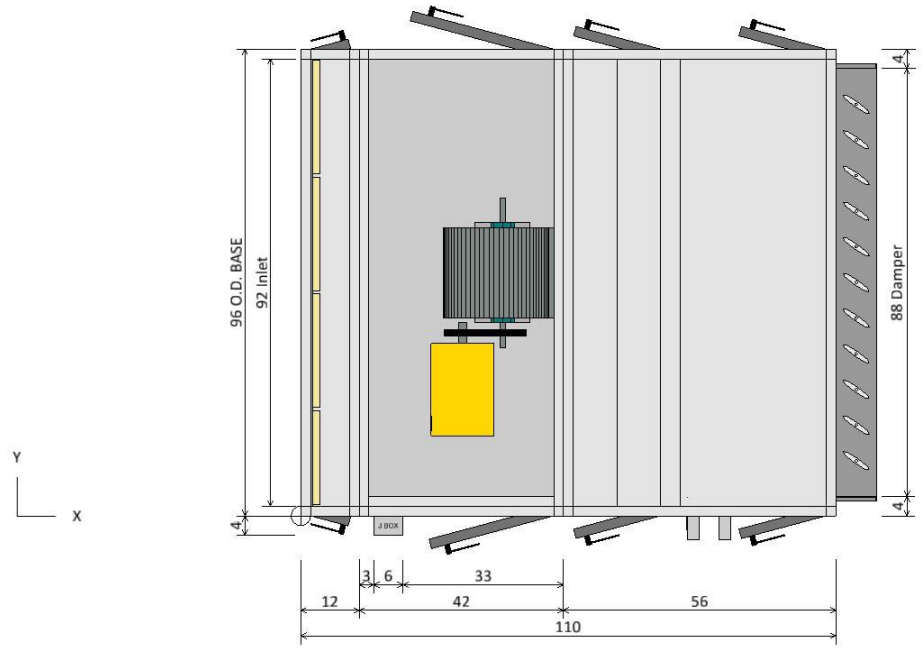

PLAN VIEW

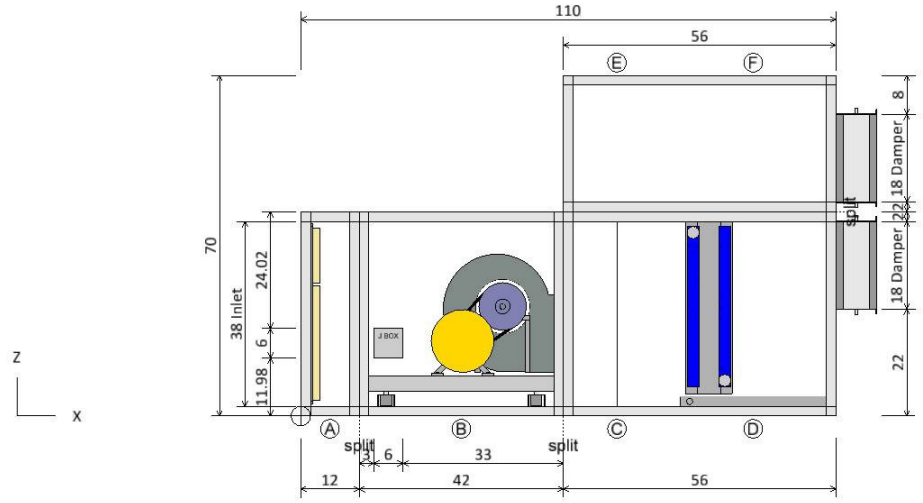

ELEVATION VIEW

Component Key		
Ⓐ	Panel Filter	
	Filter Type:	PrePleat (MERV 13)
	Right Door (WxH):	8 ins x 38 ins
	Left Door (WxH):	8 ins x 38 ins
Ⓑ	Supply Fan	
	Fan Type:	Centrifugal DWDI
	Fan Size (Class):	15 (2)
	Air Flowrate:	9310.0 cfm
	T.S.P:	2.4 insWg
	Motor Power:	15.0 HP
	Right Door (WxH):	26 ins x 38 ins
	Left Door (WxH):	30 ins x 38 ins
Ⓒ	Diffuser	
	Right Door (WxH):	18 ins x 38 ins
	Left Door (WxH):	18 ins x 38 ins
Ⓓ	Chilled Water coil	
	Coil Model:	5WS1106B
	Total Capacity:	351922.0 Btu/hr
	Right Door (WxH):	18 ins x 32 ins
	Left Door (WxH):	18 ins x 32 ins
Ⓔ	Access Section	
Ⓕ	Hot Water Coil	
	Coil Model:	5WH0001C
	Total Capacity:	0.0 Btu/hr

Plan/Elevation - No Ends	Unit Tag: AHU-11 (Klenk)			Sales Office: HTS Texas		
Product: Vision Air Handler	Project Name: Klein ISD Klenk ES AHU replacements			Sales Engineer:		
Model: CAH020GMAM	Jan. 17, 2026	Ver/Rev:	Sheet: 1 of 1	Scale: NTS	Tolerance: +/-0.25"	Dwg Units: in

DAIKIN
13600 Industrial Park Blvd, Minneapolis, MN 55441
www.DaikinApplied.com Software Version: 13.91

All opening dimensions have a 1" mounting flange along the inner edge. The actual airflow area of the opening is 2" smaller in each dimension.

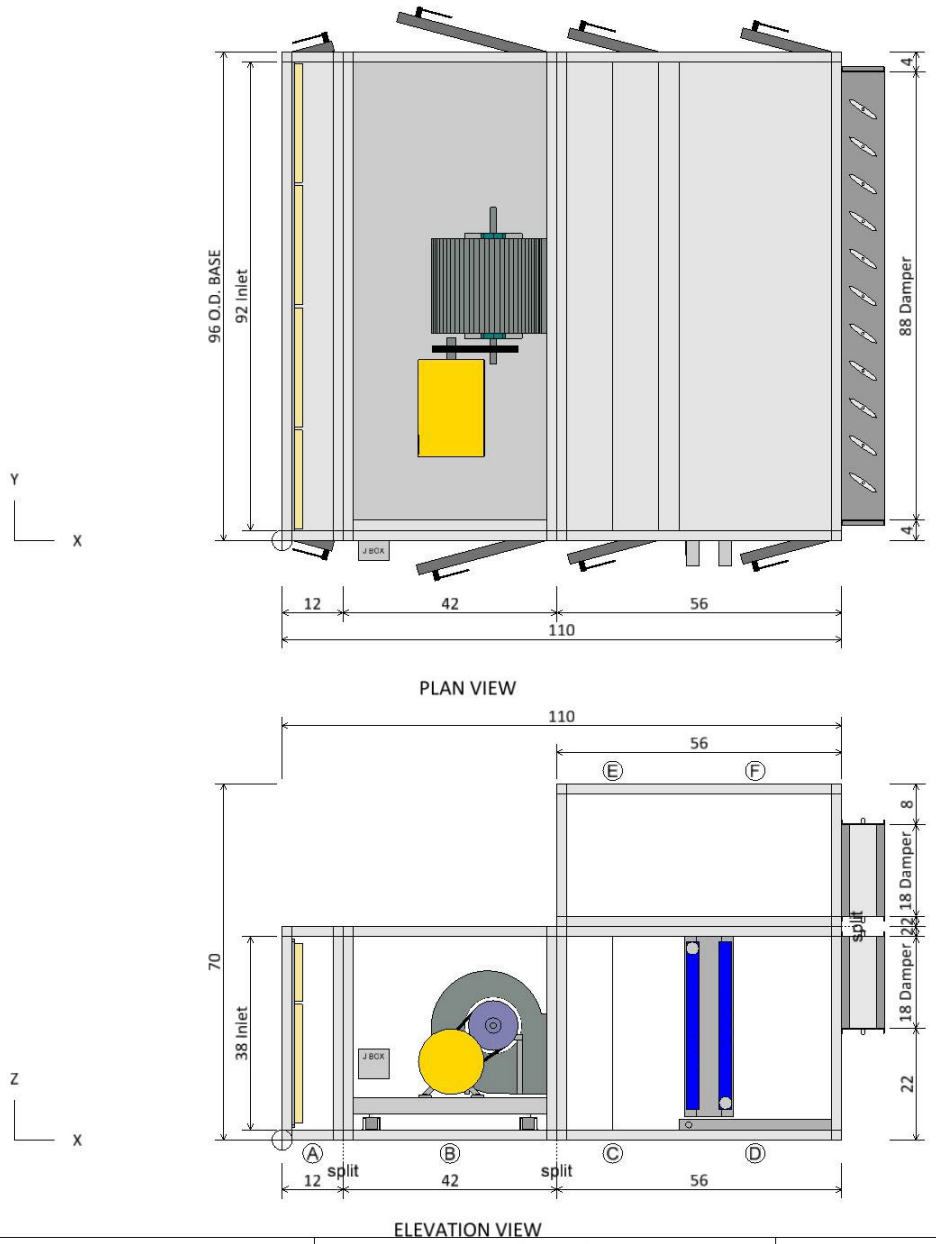

Component Key

	Type	X	Y	Z	Wid	Hgt
Ⓐ	Panel Filter Opening	0.00	2.00	2.00	92.00	38.00
Ⓓ	Chilled Water coil MZ cold deck output	118.38	4.00	22.00	88.00	18.00
Ⓕ	Hot Water Coil MZ hot deck output	118.38	4.00	44.00	88.00	18.00

Note: Dimensions are measured from the origin point.
Note: Openings with or without dampers are recessed into the unit by approximately 1.75 in.

Opening/Damper Connections	Unit Tag: AHU-11 (Klenk)			Sales Office: HTS Texas		
Product: Vision Air Handler	Project Name: Klein ISD Klenk ES AHU replacements			Sales Engineer:		
Model: CAH020GMAM	Jan. 17, 2026	Ver/Rev:	Sheet: 1 of 1	Scale: NTS	Tolerance: +/-0.25"	Dwg Units: in

DAIKIN
13600 Industrial Park Blvd, Minneapolis, MN 55441
www.DaikinApplied.com Software Version: 13.91

All opening dimensions have a 1" mounting flange along the inner edge. The actual airflow area of the opening is 2" smaller in each dimension.

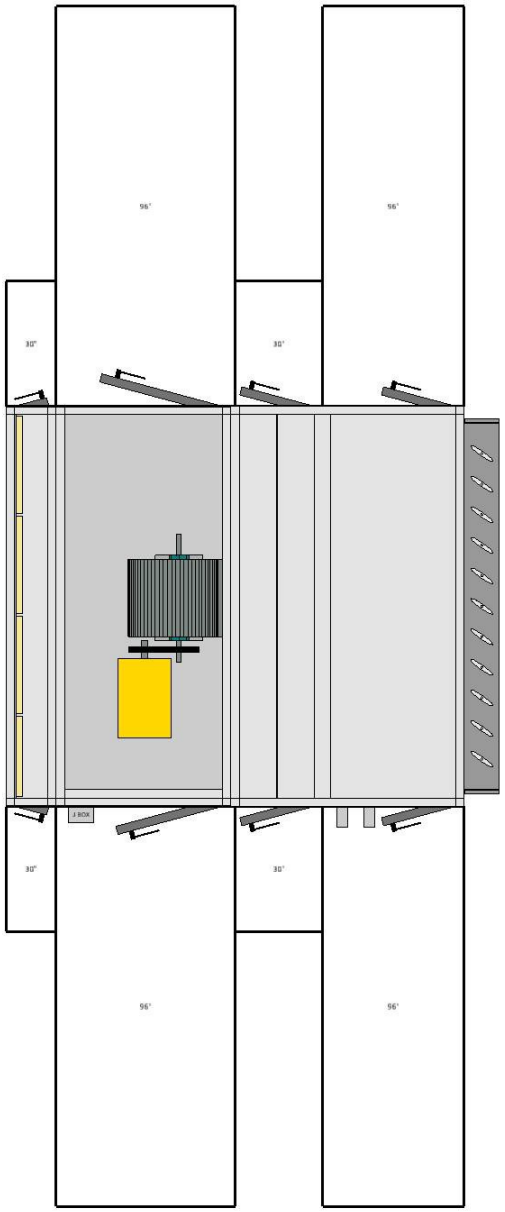

PLAN VIEW

Notes
Check local electrical component service clearance codes for specific distances. Access is only required on one side of the unit.

Service Clearance View	Unit Tag: AHU-11 (Klenk)			Sales Office: HTS Texas		
Product: Vision Air Handler	Project Name: Klein ISD Klenk ES AHU replacements			Sales Engineer:		
Model: CAH020GMAM	Jan. 17, 2026	Ver/Rev:	Sheet: 1 of 1	Scale: NTS	Tolerance: +/-0.25"	Dwg Units: in

DAIKIN
13600 Industrial Park Blvd, Minneapolis, MN 55441
www.DaikinApplied.com Software Version: 13.91

All opening dimensions have a 1" mounting flange along the inner edge. The actual airflow area of the opening is 2" smaller in each dimension.

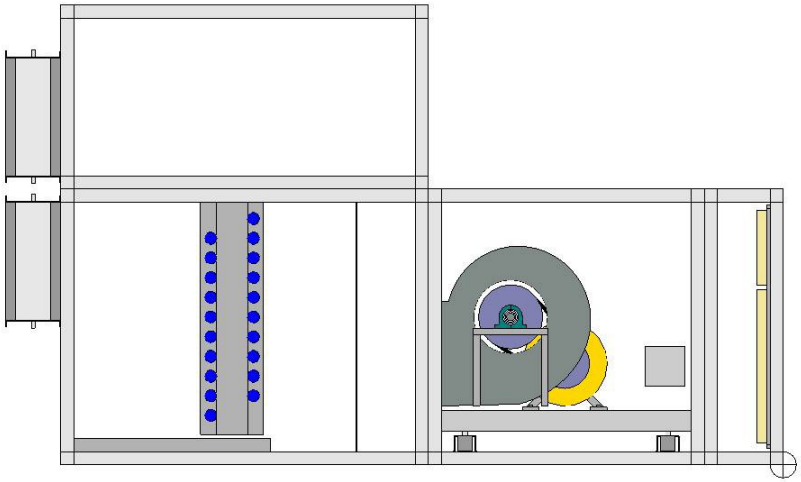

LEFT ELEVATION VIEW

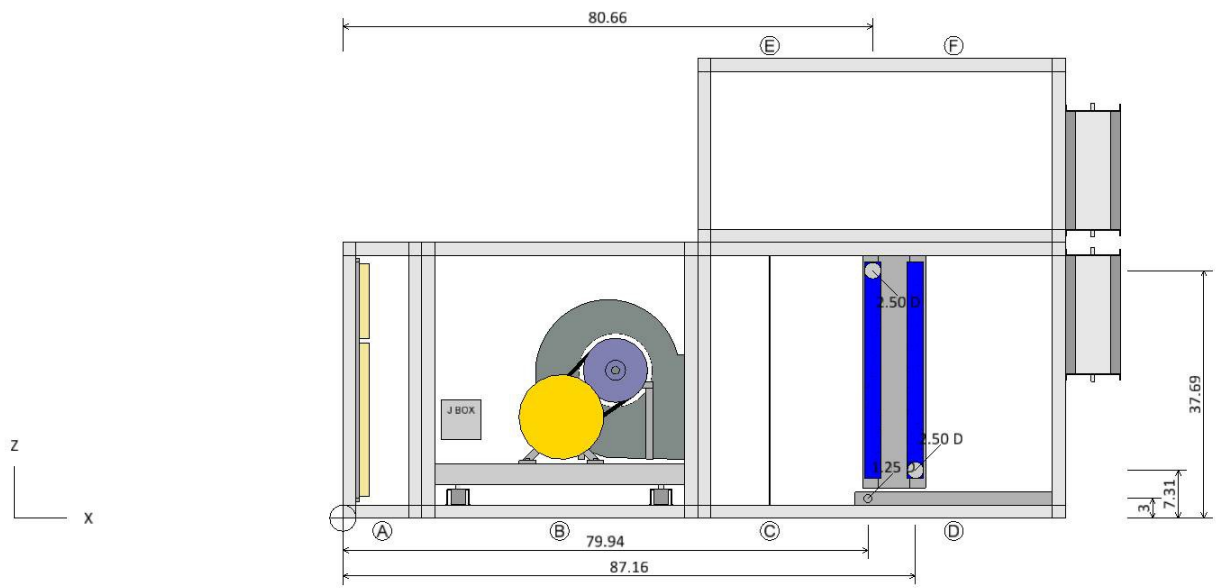

RIGHT ELEVATION VIEW

Coil and Drain Connections

	Type	X	Y	Z	Diam
Ⓓ	Chilled Water coil Condensate drain conn:	79.94	-2.90	3.00	1.25
	Cold water inlet:	87.16	-7.00*	7.31	2.50
	Cold water outlet:	80.66	-7.00*	37.69	2.50

Notes:
Dimensions are measured from the origin point.
* value varies +/- 1 in.

Coil and Drain Connections	Unit Tag: AHU-11 (Klenk)			Sales Office: HTS Texas		
Product: Vision Air Handler	Project Name: Klein ISD Klenk ES AHU replacements			Sales Engineer:		
Model: CAH020GMAM	Jan. 17, 2026	Ver/Rev:	Sheet: 1 of 1	Scale: NTS	Tolerance: +/-0.25"	Dwg Units: in

DAIKIN
13600 Industrial Park Blvd, Minneapolis, MN 55441
www.DaikinApplied.com Software Version: 13.91

All opening dimensions have a 1" mounting flange along the inner edge. The actual airflow area of the opening is 2" smaller in each dimension.

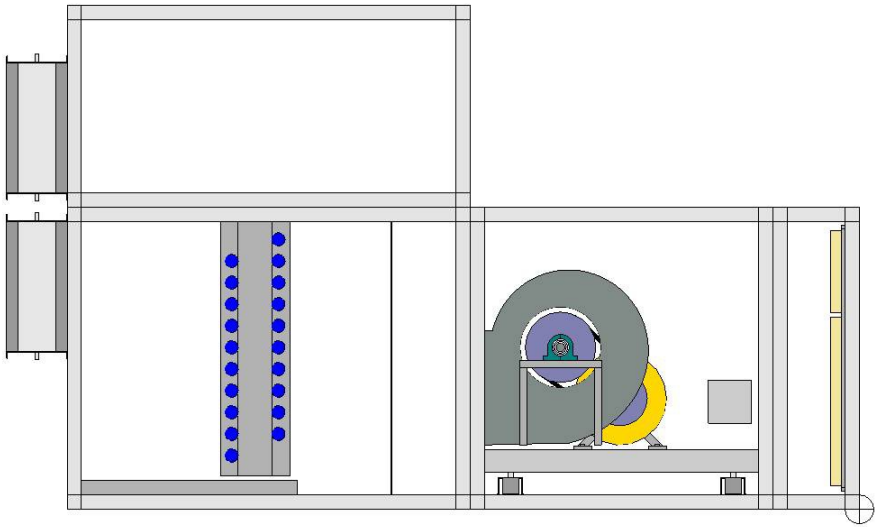

LEFT ELEVATION VIEW

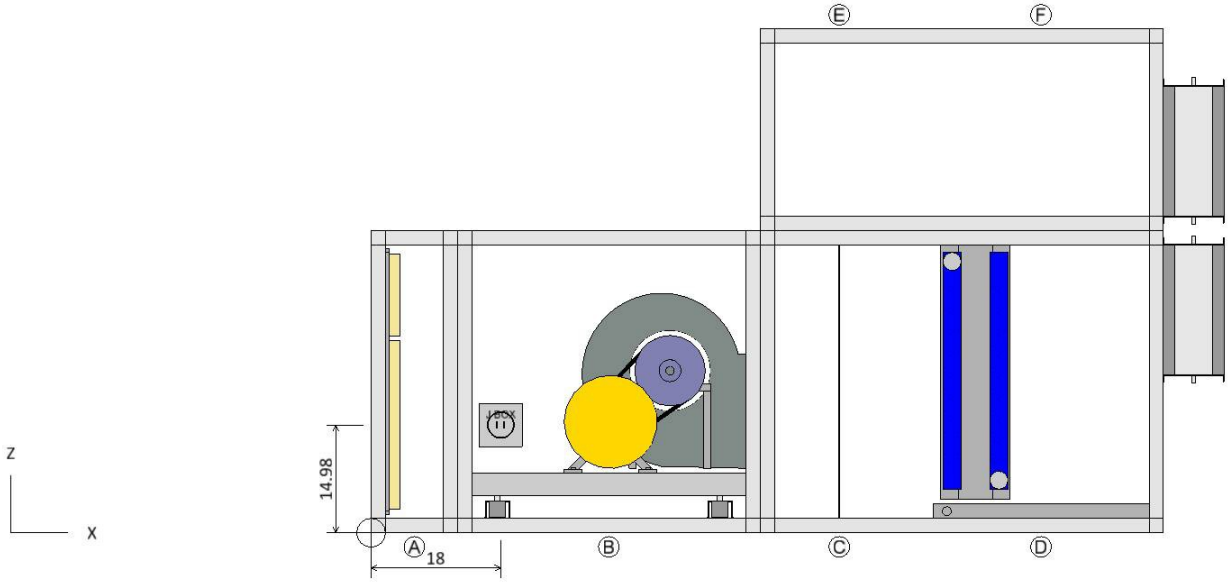

RIGHT ELEVATION VIEW

Component Key

	Type	X	Y	Z	Volts	Phase
Ⓑ	Supply Fan Fan	18.00	0.00	14.98	460	3

Note: Dimensions are measured from the origin point.

Electrical Connections	Unit Tag: AHU-11 (Klenk)			Sales Office: HTS Texas		
Product: Vision Air Handler	Project Name: Klein ISD Klenk ES AHU replacements			Sales Engineer:		
Model: CAH020GMAM	Jan. 17, 2026	Ver/Rev:	Sheet: 1 of 1	Scale: NTS	Tolerance: +/-0.25"	Dwg Units: in

DAIKIN
13600 Industrial Park Blvd, Minneapolis, MN 55441
www.DaikinApplied.com Software Version: 13.91

All opening dimensions have a 1" mounting flange along the inner edge. The actual airflow area of the opening is 2" smaller in each dimension.

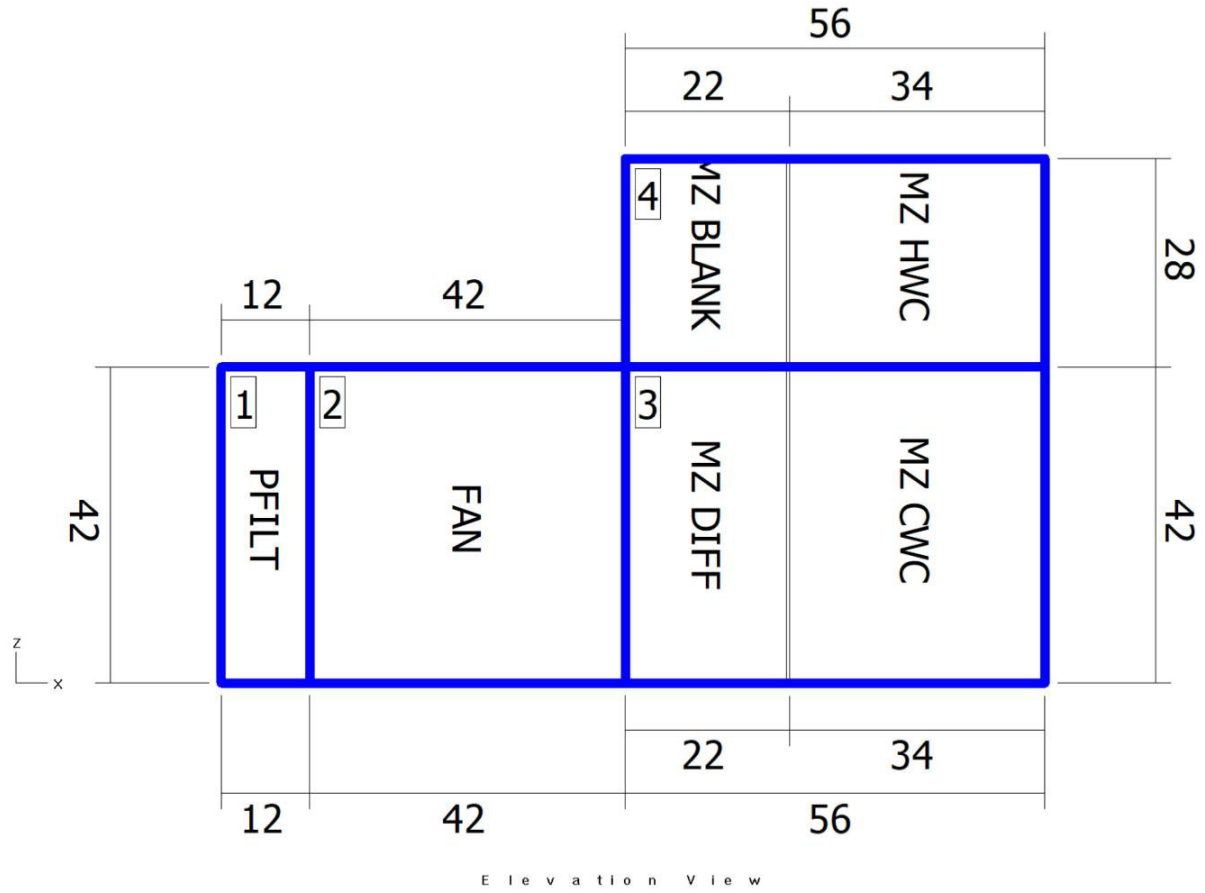

Elevation View

Shipping Sections

Section	Weight (lb)	X	Y	Z
Section 1	232.11	12	96	42
Section 2	1162.84	42	96	42
Section 3	1255.23	56	96	42
Section 4	601.97	56	96	28
Total Unit	3252.14	110	96	70

Note: Base rails, curb ready base, coil connectors, drain connectors, and control boxes not included in height X, Y, Z dimensions.
Shipping section may be 2" longer in air flow direction due to internal splice joint.
Horizontal multizone section : Add 8.38" to section length if dampers are installed.

Shipping Sections	Unit Tag: AHU-11 (Klenk)			Sales Office: HTS Texas		
Product: Vision Air Handler	Project Name: Klein ISD Klenk ES AHU replacements			Sales Engineer:		
Model: CAH020GMAM	Jan. 17, 2026	Ver/Rev:	Sheet: 1 of 1	Scale: NTS	Tolerance: +/-0.25"	Dwg Units: in

DAIKIN
13600 Industrial Park Blvd, Minneapolis, MN 55441
www.DaikinApplied.com Software Version: 13.91

All opening dimensions have a 1" mounting flange along the inner edge. The actual airflow area of the opening is 2" smaller in each dimension.

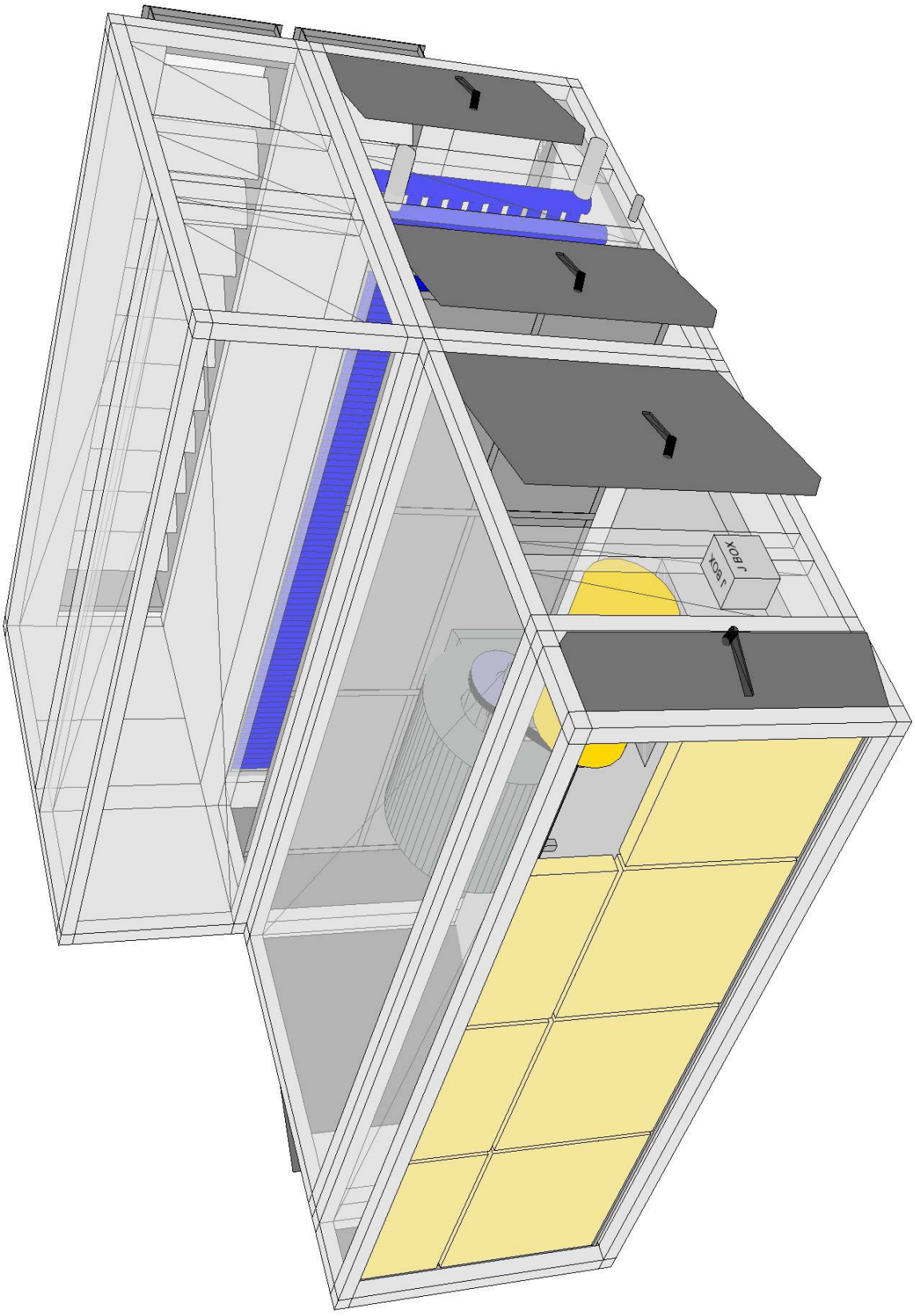

Product Drawing

Unit Tag: AHU-11 (Klenk)		Sales Office: HTS Texas	
Project Name: Klein ISD Klenk ES AHU replacement		Sales Engineer:	
Jan. 17, 2026	Ver/Rev:	Sheet: 1 of 1	Scale: NTS	Tolerance: +/-0.25"	Dwg Units: in

Product: Vision Air Handler
Model: CAH020GMAM

All opening dimensions have a 1" mounting flange along the inner edge. The actual airflow area of the opening is 2" smaller in each dimension.

DAIKIN
13600 Industrial Park Blvd, Minneapolis, MN 55441
www.DaikinApplied.com Software Version: 13.91

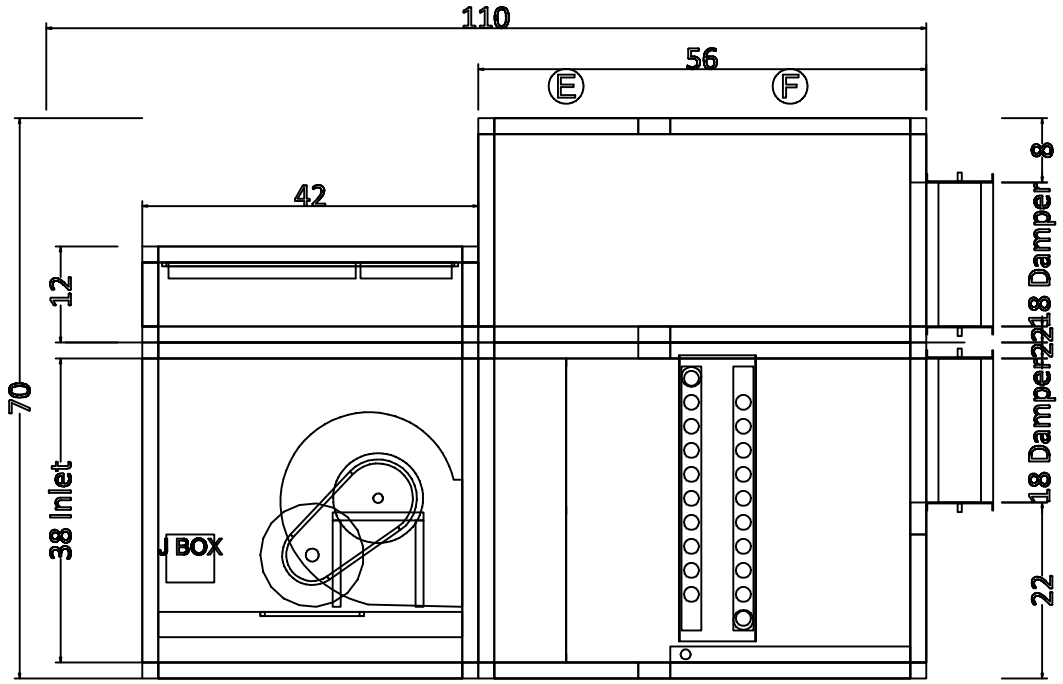

ELEVATION VIEW

Plan/Elevation - No Ends	Unit Tag: AHU-11 (Klenk)			Sales Office: HTS Texas			DAIKIN
Product: Vision Air Handler	Project Name: Klein ISD Klenk ES AHU replacements			Sales Engineer:			13600 Industrial Park Blvd, Minneapolis, MN 55441
Model: CAH020GMAM	Jan. 17, 2026	Ver/Rev:	Sheet: 1 of 1	Scale: NTS	Tolerance: +/-0.25"	Dwg Units: in	www.DaikinApplied.com Software Version: 13.91

All opening dimensions have a 1" mounting flange along the inner edge. The actual airflow area of the opening is 2" smaller in each dimension.

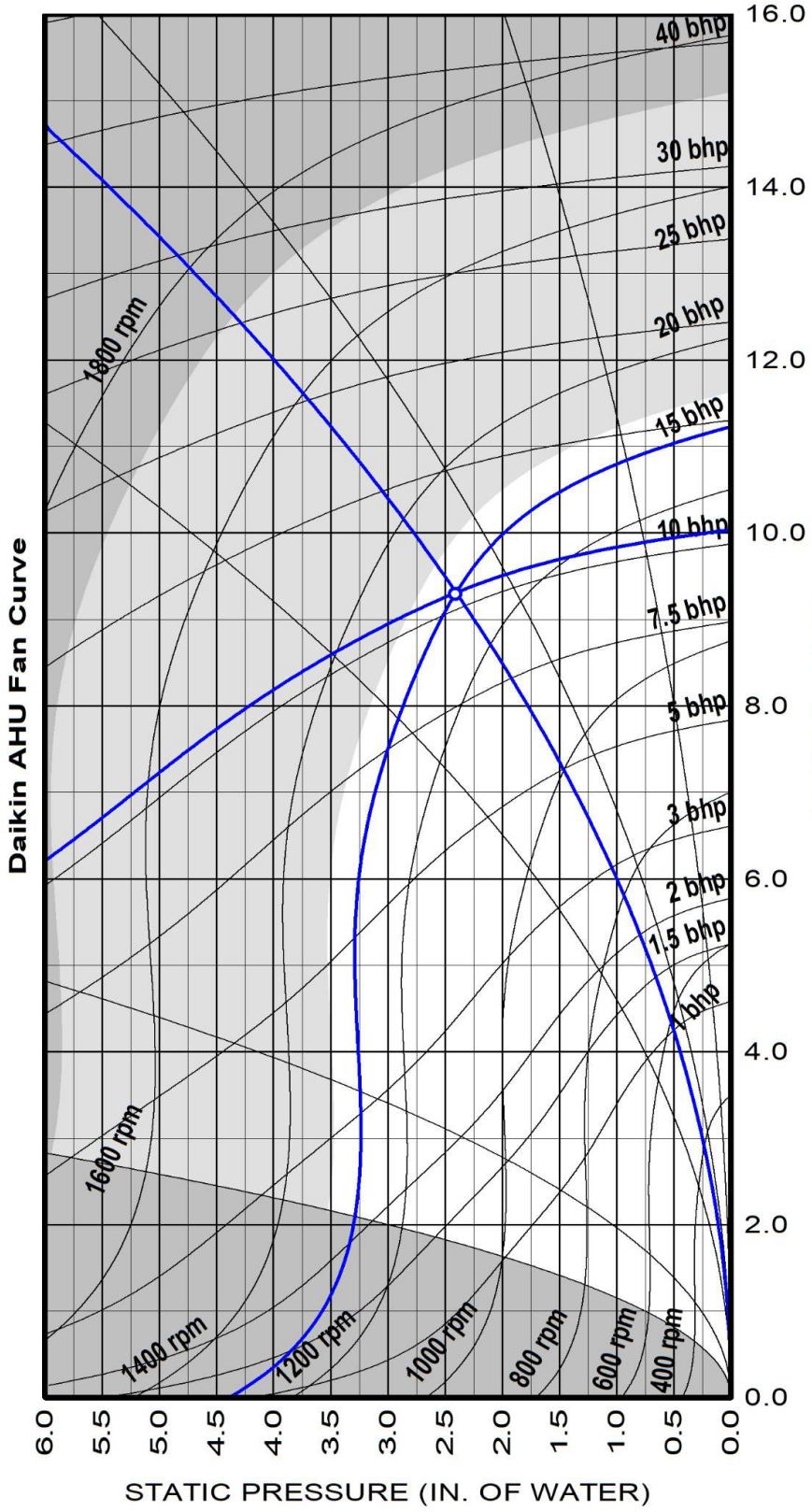

15.00" Forward Curved Supply Fan at Standard Conditions

Air volume	9310	cfm	Fan speed	1283	rpm
Total static	2.40	insWg	Max speed	1725	rpm
Fan Shaft Power	10.5	bhp	Efficiency	33.5	%
Fan Energy Index(FEI)	0.63				

Unit tagging: AHU-11 (Klenk) Date: January-17-2026

Job name: Klein ISD Klenk ES AHU replacements Time: 09:41

Supply fan performance is certified in accordance with the Central Station Air-Handling Unit Certification Program, which is based on AHRI Standard 430.

Job Information	Technical Data Sheet
Job Name	Klein ISD Klenk ES AHU replacements
Date	January 17 2026
Submitted By	Salas O'Brien
Software Version	13.91
Unit Tag	AHU-12 (Klenk)

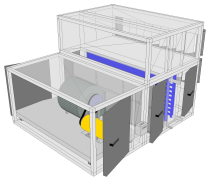

Unit Overview

Model Number	Supply					
	Air Volume cfm	Static Pressure		External Dimensions		
		External inWc	Total inWc	Height in	Width in	Length in
CAH015GMAM	6900	0.75	1.80	40*	80*	96

**Not including base rails, coil connectors, drain connectors and control boxes.*

Unit

Model Number:	CAH015GMAM		
Approval:	ETL Listed / ETL Listed to Canadian Safety Standards (ETL Label / ETLc Label)		
Outer Panel:	18 gauge G90 Galvanized Steel (unpainted)		
Liner:	24 gauge Galvanized Steel (unless noted per section)		
Insulation:	R-13 Injected Foam		
Sound Baffles:	Included in Fan, Plenum, Access and Manual section (unless noted per section)		
Unit Configuration:	Multizone	**Drive (Handling) Location:**	Right
Base:	None	**Wall Thickness:**	2 in
Altitude:	0 ft	**Parts Warranty:**	Additional One Year, Two Year Total

Supply Fan	Component: 1	Length: 42 in	Shipping Section: 1

Fan Performance

Air Volume	Static Pressure			Fan Energy Index(FEI)	Total Input Power	Fan Shaft Power	Fan Wheel Speed		Outlet Velocity
	External	Total	Cabinet				Operating	Maximum	
6900 cfm	0.75 inWc	1.80 inWc	0.00 inWc	0.80	4.6 kW	4.84 BHP	1044 rpm	1725 rpm	3333 ft/min

Fan Data

Fan Type	Blade Type / Class	Quantity of Fans	Wheel Diameter	Number of Blades	Discharge	Motor Location
Centrifugal DWDI	Forward Curved / 2	1	15.00 in	N/A	Bottom horizontal	To Side of Fan

Motor Data

Power	Electrical Supply	Speed	Efficiency	Enclosure	Frame Size	Supplier	Number of Poles	Lock Rotor Current	Full Load Current
10.0 HP	460/60/3 V/Hz/Phase	1750 rpm	Premium	TEFC	215 T frame	Generic	4	106.62 A	12.50 A

Fan Options

Shaft Grounding Kit:	Provided	Isolator Type:	Spring

Drive Package Data*

Fan Sheave	Motor Sheave	Belt	Number of Belts	Actual Drive S.F.	Bearing Type
2AK104H	2AK64H	A48	2	1.35	Standard - L50 (200K)

**Daikin Applied reserves the right to provide a different but equivalent drive package*

VFD/Starter/Disconnect Data

Selection Type:	External J-Box	Vendor:	Factory Standard
Voltage:	460 V	Height x Width x Depth:	6.00 in x 6.00 in x 4.00 in
Mounting:	Door Side	Enclosure:	NEMA 1

Door

Location	Drive Side Door Width	Opp. Drv. Side Door Width	Opening
Both sides	26 in	30 in	Outward

Special Options

Sound Baffle

Sound baffle included

Two Deck Multizone	Component: 2	Length: 54 in	Shipping Section: 2 & 3

Discharge Location	Number of Zones	Multizone APD*	Damper Type	Actuation
Horizontal / Horizontal	9	1.05 inWc	Low leak / Low leak	None - damper mechanically linked

Note : includes coil & balance plate & diffuser

Note : Cabinet height for multizone extends 26 inches above 'External cabinet height' referenced above.
The damper assembly will add 8.38 inches to the cabinet length for horizontal discharge and 8.38 inches to the height for vertical discharge.

Cold Deck Coil

Coil Model	Total Capacity	Sensible Capacity	Number of Coils	Number of Rows	Fins per Inch	Tube Diameter	Tube Spacing (Face x Row)
5WL1206B	294580 Btu/hr	205660 Btu/hr	1	6	12	0.625 in	1.50 in X 1.299 in

Coil Operating Weight	Coil Dry Weight
393 lb	296 lb

Air Volume	Air Temperature				Coil Air Pressure Drop	Finned Height	Finned Length	Face Area	Face Velocity
	Entering		Leaving						
	Dry Bulb	Wet Bulb	Dry Bulb	Wet Bulb					
6900 cfm	79.4 °F	66.1 °F	52.1 °F	51.8 °F	0.82 inWc	30 in	67 in	13.96 ft²	494 ft/min

Water

Entering	Leaving	Flow Rate	Pressure Drop	Velocity	Fluid Volume	Fluid Weight
45.0 °F	53.6 °F	68.20 gpm	15.10 ftHd	4.90 ft/s	11.0 gal	97.00 lb

Connection [Data Per Coil]				Min. Fin Surface Temp.	Min. Tube Wall Surface Temp.	Fouling Factor
Type	Size	Location	Material			
Threaded	2.00 in	Drive side	Carbon steel	45.0 °F	45.0 °F	0.000

Material				Drain Pan	Drain Side	Electro-Fin Coat	Moisture Eliminator
Fin	Tube	Header	Case				
Aluminum .0075 in	Copper .020 in	Copper	Stainless steel	Stainless steel	Drive side	NA	NA

AHRI 410 Certification

Certified in accordance with the AHRI Forced-Circulation Air-Cooling and Air-Heating Coils Certification Program which is based on AHRI Standard 410 within the Range of Standard Rating Conditions listed in Table 1 of the Standard. Certified units may be found in the AHRI Directory at www.ahridirectory.org

Future Hot Deck Coil(54 ins)

Number of Coils	Number of Rows
1	1

Coil Air Pressure Drop	Finned Height	Finned Width	Face Area	Face Velocity
NA inWc	18 in	64 in	8.00 ft²	863 ft/min

Connection Location	Connection Material
Drive side	Carbon steel

Coil Model	Drain Pan	Drain Pan Side
Future Coil (Not Supplied)	NA	NA

AHRI 410 Certification

Coil is NOT certified by AHRI

Door

Location	Drive Side Door Width	Opp. Drv. Side Door Width	Opening
Both sides	18 in	18 in	Outward

Unit Sound Power (dB)

Type	63 Hz	125 Hz	250 Hz	500 Hz	1000 Hz	2000 Hz	4000 Hz	8000 Hz
Radiated:	80	82	74	69	66	56	46	51
Unit Discharge:	90	92	92	90	88	84	84	79
Unit Return:	87	89	89	87	85	81	81	76

Shipping Section Details

Section	Length in	Weight lb	Corner Weights (lb)				Center of Gravity (in)		
			P1	P2	P3	P4	XX	YY	ZZ
1	42	944	297	204	193	287	21	32	17
2	54	1043	235	220	287	302	30	39	17
3	54	502	225	210	194	208	26	39	14
Entire Unit	**96**	**2489**	**697**	**575**	**734**	**857**	**53**	**37**	**28**

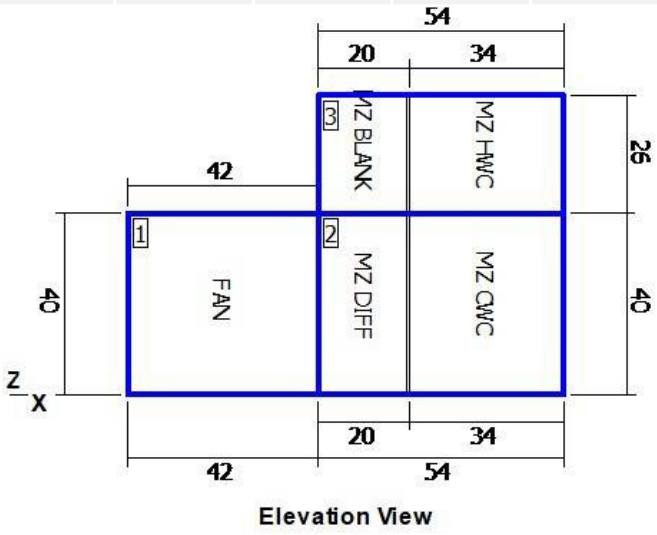

Elevation View

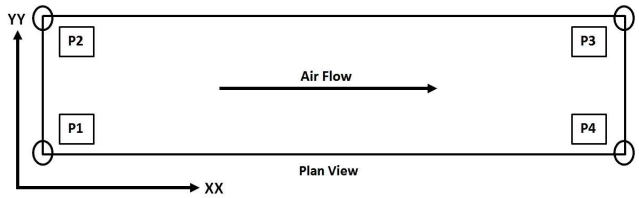

NOTE: Special components aren't included in the corner weights and center of gravity data.

Shipping Protection	None

Supply Static Pressure Drop

Component	Option	Static Pressure Drop
Supply Fan	Cabinet	
Multizone	Multizone	1.05 insWg
External Static	External Static	0.75 insWg
Total Supply Fan Static		1.80 insWg

Minimum Recommended Drain Pan Trap Dimensions

Shipping Section	Component	H
2	Chilled Water coil	1.16

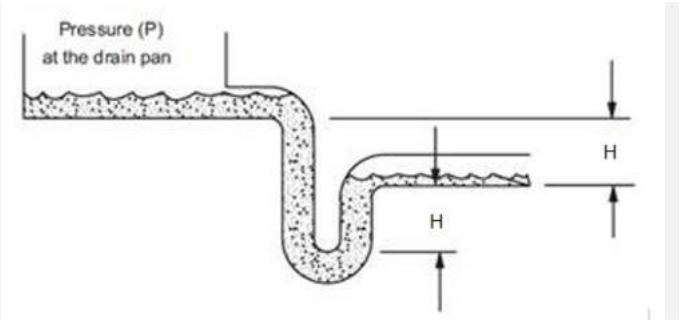

Dimensions provided as a courtesy and are recommended minimums only. Daikin is not responsible for supplying or designing drain pan traps and is not responsible for any damage caused by incorrect trap heights. The dimensions listed above should be reviewed and approved by a licensed plumbing professional.

This calculation is based on an assumption that 0.25 inches of the external static pressure is in the return duct and the remainder is in the supply duct. If actual conditions vary from this assumption then contact Applications for new trap height recommendations.

AHRI Certification

Certified by the AHRI Central Station Air-Handling Unit (AHU) Certification Program, which is based on AHRI Standard 430/431. AHRI certified units are subject to rigorous and continuous testing, have performance ratings independently measured and are third-party verified. Certified units may be found in the AHRI Directory at www.ahridirectory.org.

Notes

Standard
1. As a standalone component, unit meets or exceeds requirements of ASHRAE 90.1 - 2007. The approving authority is responsible for compliance of multi - component building systems.

51MN4W

Klein ISD Klenk ES AHU rep

32

1/17/2026

AHU-12 (Klenk)

Drawing

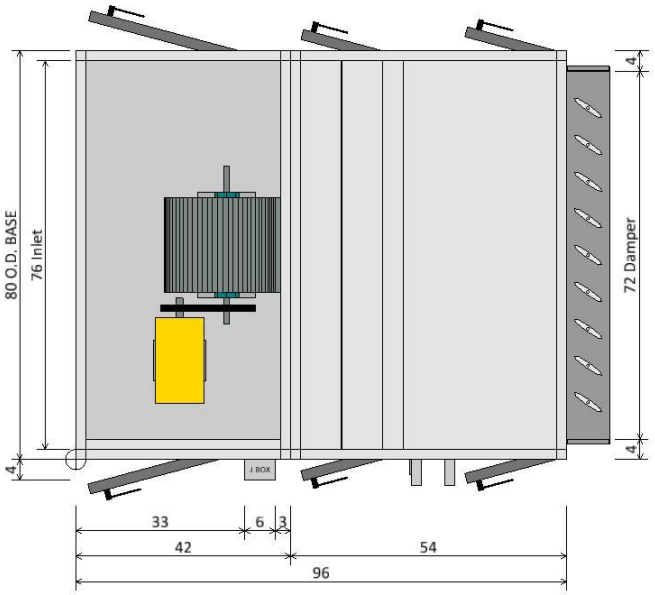

PLAN VIEW

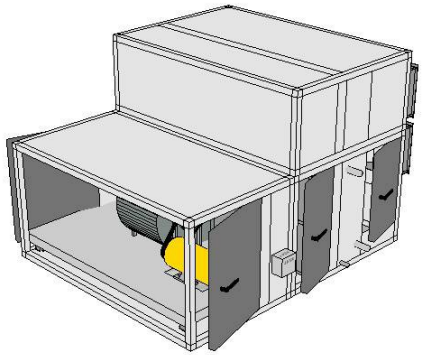

ISOMETRIC VIEW

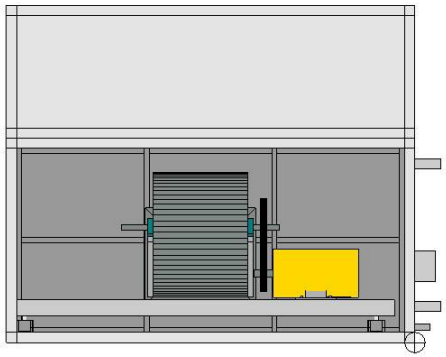

FRONT END VIEW

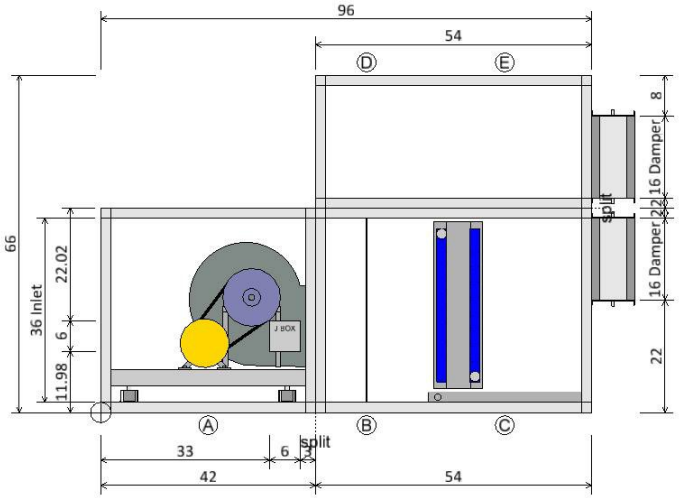

ELEVATION VIEW

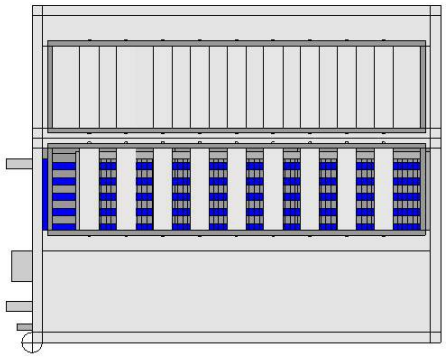

REAR END VIEW

Plan/Elevation	Unit Tag: AHU-12 (Klenk)			Sales Office: HTS Texas		
Product: Vision Air Handler	Project Name: Klein ISD Klenk ES AHU replacements			Sales Engineer:		
Model: CAH015GMAM	Jan. 17, 2026	Ver/Rev:	Sheet: 1 of 1	Scale: NTS	Tolerance: +/-0.25"	Dwg Units: in

DAIKIN

13600 Industrial Park Blvd, Minneapolis, MN 55441

www.DaikinApplied.com Software Version: 13.91

All opening dimensions have a 1" mounting flange along the inner edge. The actual airflow area of the opening is 2" smaller in each dimension.

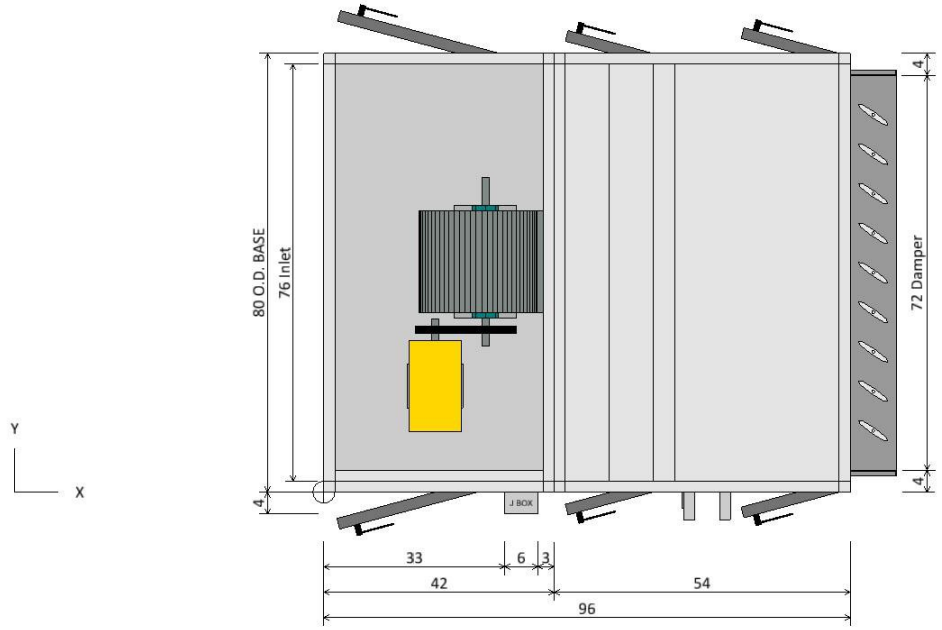

PLAN VIEW

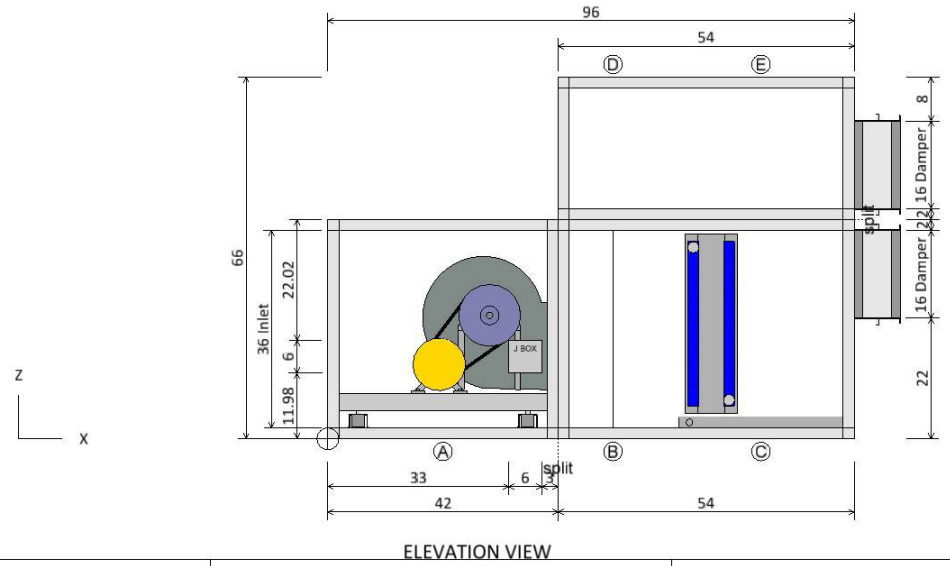

ELEVATION VIEW

Component Key		
Ⓐ	Supply Fan	
	Fan Type:	Centrifugal DWDI
	Fan Size (Class):	15 (2)
	Air Flowrate:	6900.0 cfm
	T.S.P:	1.8 insWg
	Motor Power:	10.0 HP
	Right Door (WxH):	26 ins x 36 ins
	Left Door (WxH):	30 ins x 36 ins
Ⓑ	Diffuser	
	Right Door (WxH):	16 ins x 36 ins
	Left Door (WxH):	16 ins x 36 ins
Ⓒ	Chilled Water coil	
	Coil Model:	5WL1206B
	Total Capacity:	294580.0 Btu/hr
	Right Door (WxH):	18 ins x 30 ins
	Left Door (WxH):	18 ins x 30 ins
Ⓓ	Access Section	
Ⓔ	Hot Water Coil	
	Coil Model:	5WH0001C
	Total Capacity:	0.0 Btu/hr

Plan/Elevation - No Ends	Unit Tag: AHU-12 (Klenk)			Sales Office: HTS Texas		
Product: Vision Air Handler	Project Name: Klein ISD Klenk ES AHU replacements			Sales Engineer:		
Model: CAH015GMAM	Jan. 17, 2026	Ver/Rev:	Sheet: 1 of 1	Scale: NTS	Tolerance: +/-0.25"	Dwg Units: in

DAIKIN
13600 Industrial Park Blvd, Minneapolis, MN 55441
www.DaikinApplied.com Software Version: 13.91

All opening dimensions have a 1" mounting flange along the inner edge. The actual airflow area of the opening is 2" smaller in each dimension.

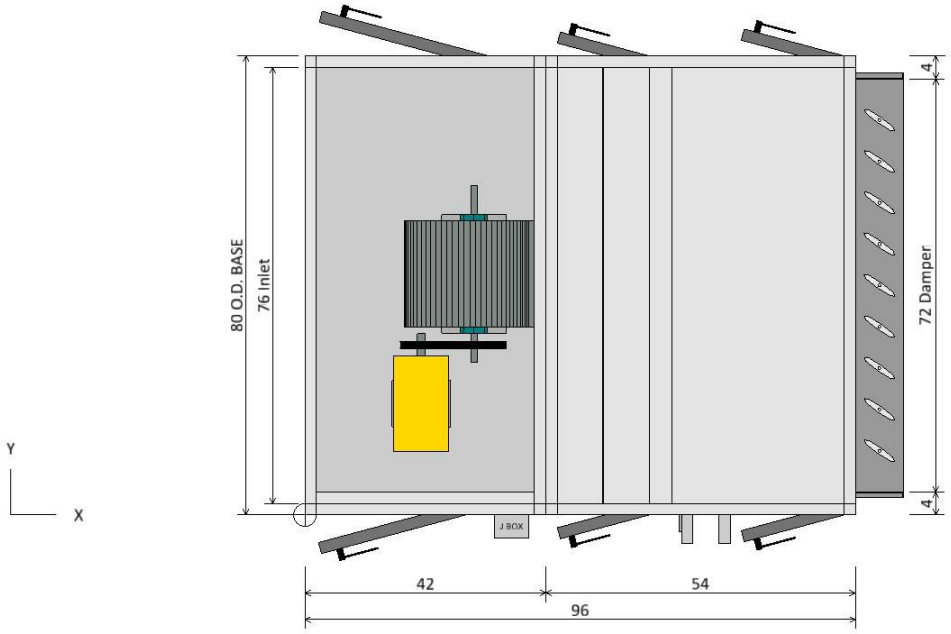

PLAN VIEW

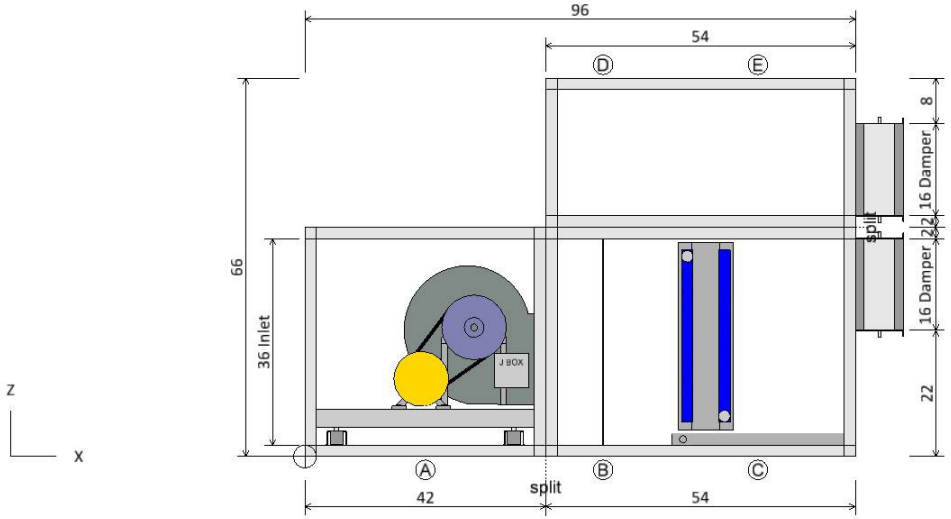

ELEVATION VIEW

Component Key

	Type	X	Y	Z	Wid	Hgt
Ⓐ	Supply Fan Opening	0.00	2.00	2.00	76.00	36.00
Ⓒ	Chilled Water coil MZ cold deck output	104.38	4.00	22.00	72.00	16.00
Ⓔ	Hot Water Coil MZ hot deck output	104.38	4.00	42.00	72.00	16.00

Note: Dimensions are measured from the origin point.
Note: Openings with or without dampers are recessed into the unit by approximately 1.75 in.

Opening/Damper Connections	Unit Tag: AHU-12 (Klenk)			Sales Office: HTS Texas		
Product: Vision Air Handler	Project Name: Klein ISD Klenk ES AHU replacements			Sales Engineer:		
Model: CAH015GMAM	Jan. 17, 2026	Ver/Rev:	Sheet: 1 of 1	Scale: NTS	Tolerance: +/-0.25"	Dwg Units: in

DAIKIN
13600 Industrial Park Blvd, Minneapolis, MN 55441
www.DaikinApplied.com Software Version: 13.91

All opening dimensions have a 1" mounting flange along the inner edge. The actual airflow area of the opening is 2" smaller in each dimension.

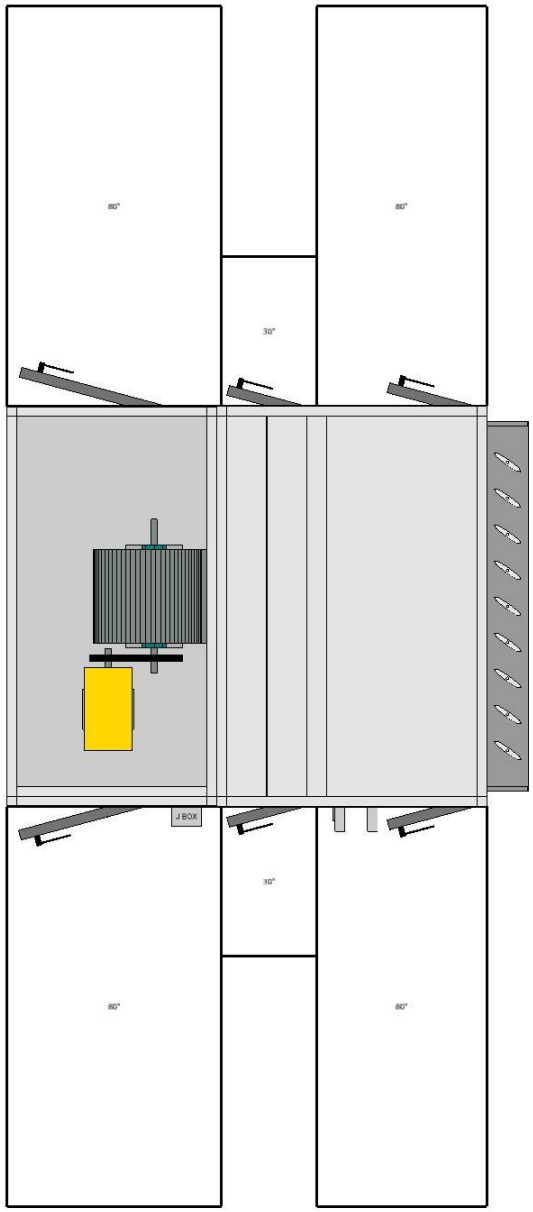

PLAN VIEW

Notes
Check local electrical component service clearance codes for specific distances. Access is only required on one side of the unit.

Service Clearance View	Unit Tag: AHU-12 (Klenk)			Sales Office: HTS Texas		
Product: Vision Air Handler	Project Name: Klein ISD Klenk ES AHU replacements			Sales Engineer:		
Model: CAH015GMAM	Jan. 17, 2026	Ver/Rev:	Sheet: 1 of 1	Scale: NTS	Tolerance: +/-0.25"	Dwg Units: in

DAIKIN
13600 Industrial Park Blvd, Minneapolis, MN 55441
www.DaikinApplied.com Software Version: 13.91

All opening dimensions have a 1" mounting flange along the inner edge. The actual airflow area of the opening is 2" smaller in each dimension.

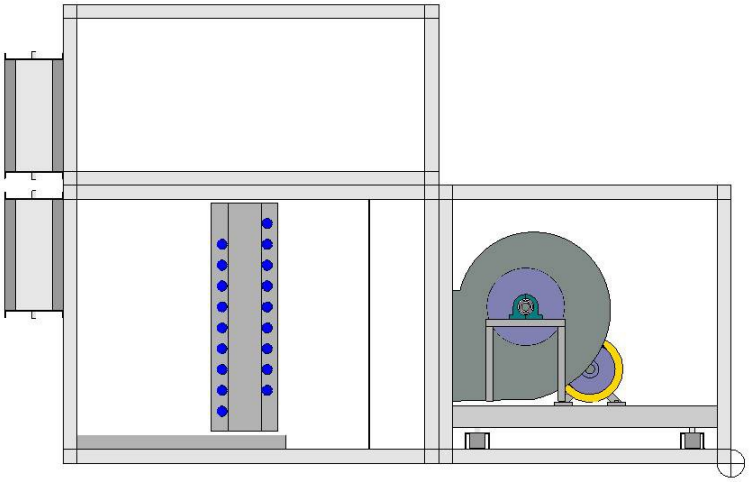

LEFT ELEVATION VIEW

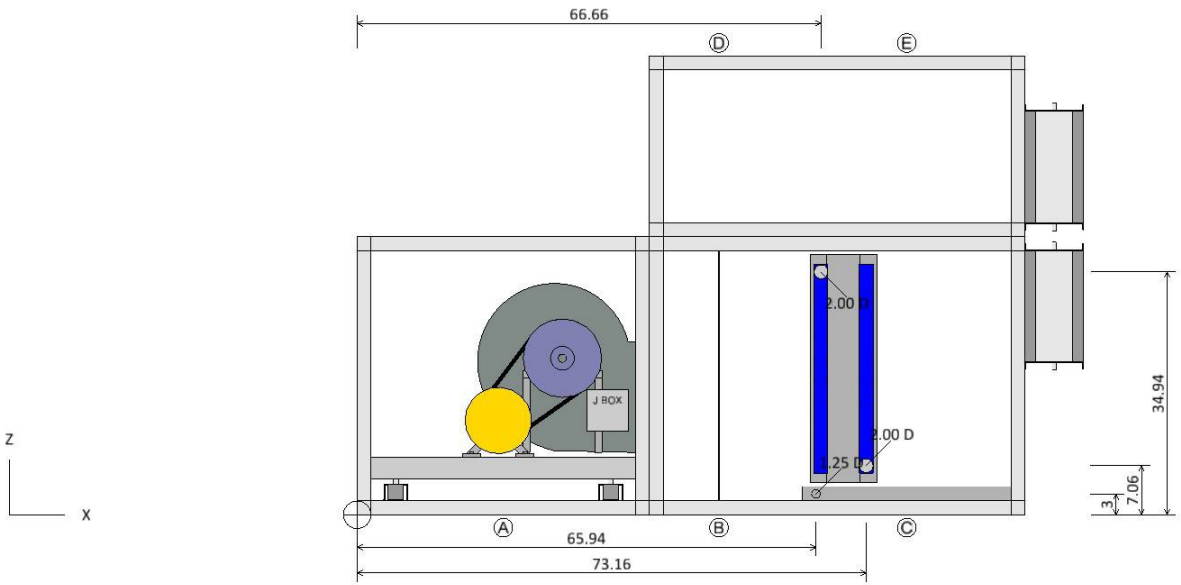

RIGHT ELEVATION VIEW

Coil and Drain Connections

	Type	X	Y	Z	Diam
Ⓒ	Chilled Water coil Condensate drain conn:	65.94	-2.90	3.00	1.25
	Cold water inlet:	73.16	-7.00*	7.06	2.00
	Cold water outlet:	66.66	-7.00*	34.94	2.00

Notes:
Dimensions are measured from the origin point.
* value varies +/- 1 in.

Coil and Drain Connections	Unit Tag: AHU-12 (Klenk)			Sales Office: HTS Texas		
Product: Vision Air Handler	Project Name: Klein ISD Klenk ES AHU replacements			Sales Engineer:		
Model: CAH015GMAM	Jan. 17, 2026	Ver/Rev:	Sheet: 1 of 1	Scale: NTS	Tolerance: +/-0.25"	Dwg Units: in

DAIKIN
13600 Industrial Park Blvd, Minneapolis, MN 55441
www.DaikinApplied.com Software Version: 13.91

All opening dimensions have a 1" mounting flange along the inner edge. The actual airflow area of the opening is 2" smaller in each dimension.

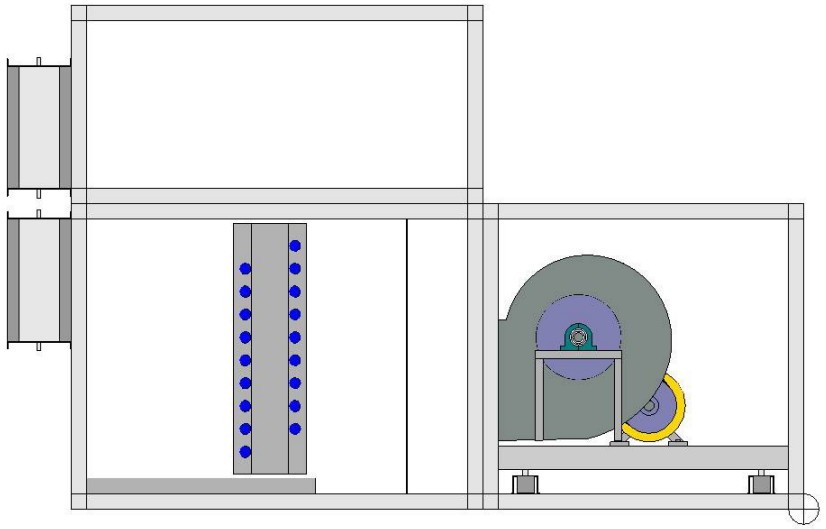

LEFT ELEVATION VIEW

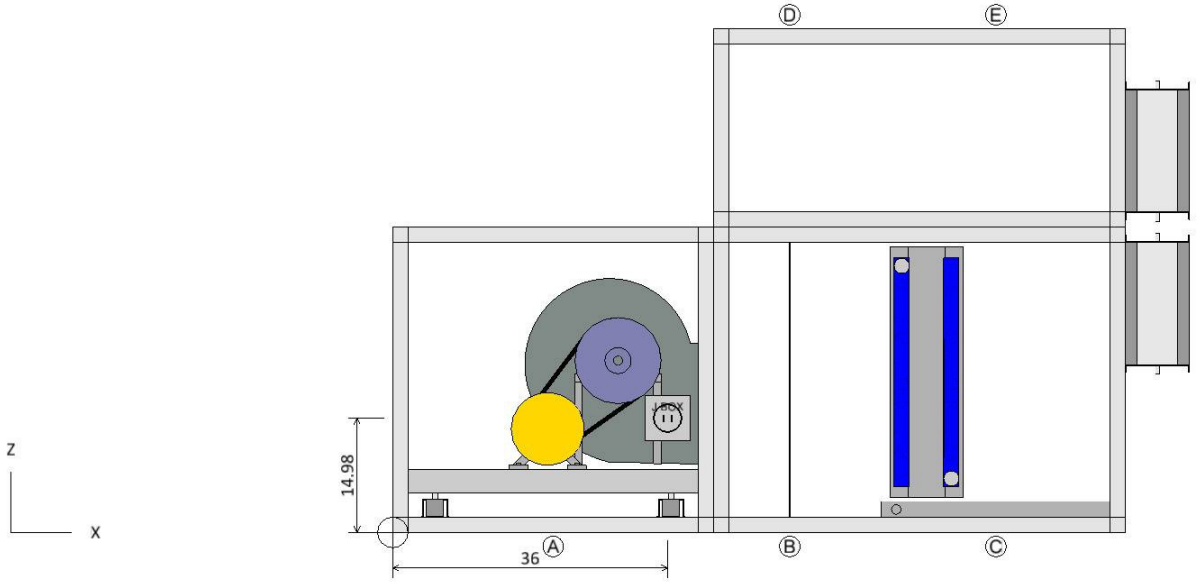

RIGHT ELEVATION VIEW

Component Key

	Type	X	Y	Z	Volts	Phase
Ⓐ	Supply Fan Fan	36.00	0.00	14.98	460	3

Note: Dimensions are measured from the origin point.

Electrical Connections	Unit Tag: AHU-12 (Klenk)			Sales Office: HTS Texas		
Product: Vision Air Handler	Project Name: Klein ISD Klenk ES AHU replacements			Sales Engineer:		
Model: CAH015GMAM	Jan. 17, 2026	Ver/Rev:	Sheet: 1 of 1	Scale: NTS	Tolerance: +/-0.25"	Dwg Units: in

DAIKIN
13600 Industrial Park Blvd, Minneapolis, MN 55441
www.DaikinApplied.com Software Version: 13.91

All opening dimensions have a 1" mounting flange along the inner edge. The actual airflow area of the opening is 2" smaller in each dimension.

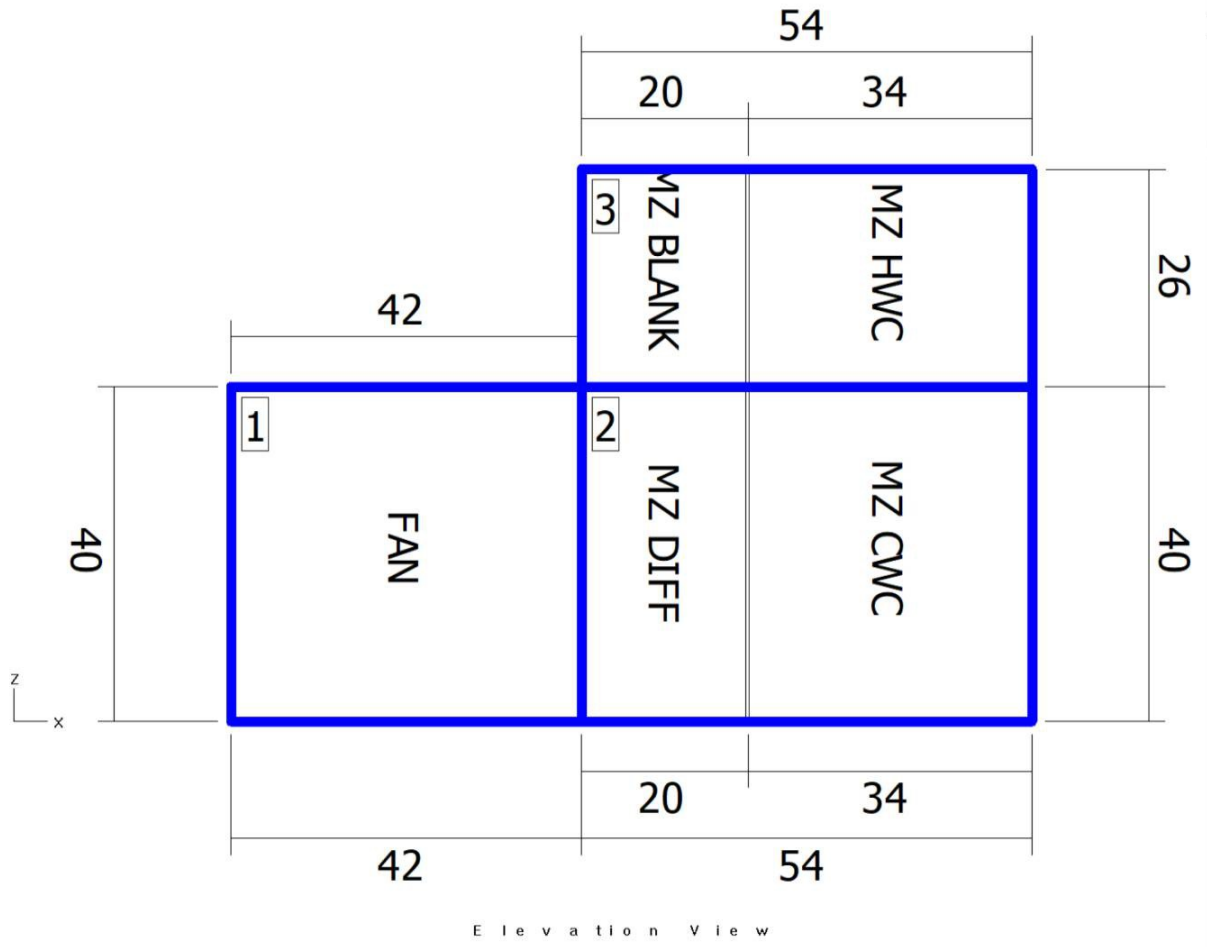

Elevation View

Shipping Sections

Section	Weight (lb)	X	Y	Z
Section 1	944.09	42	80	40
Section 2	1043.48	54	80	40
Section 3	501.62	54	80	26
Total Unit	2489.19	96	80	66

Note: Base rails, curb ready base, coil connectors, drain connectors, and control boxes not included in height X, Y, Z dimensions.
Shipping section may be 2" longer in air flow direction due to internal splice joint.
Horizontal multizone section : Add 8.38" to section length if dampers are installed.

Shipping Sections	Unit Tag: AHU-12 (Klenk)			Sales Office: HTS Texas		
Product: Vision Air Handler	Project Name: Klein ISD Klenk ES AHU replacements			Sales Engineer:		
Model: CAH015GMAM	Jan. 17, 2026	Ver/Rev:	Sheet: 1 of 1	Scale: NTS	Tolerance: +/-0.25"	Dwg Units: in

DAIKIN
13600 Industrial Park Blvd, Minneapolis, MN 55441
www.DaikinApplied.com Software Version: 13.91

All opening dimensions have a 1" mounting flange along the inner edge. The actual airflow area of the opening is 2" smaller in each dimension.

Product Drawing	Unit Tag: AHU-12 (Klenk)			Sales Office: HTS Texas			DAIKIN
Product: Vision Air Handler	Project Name: Klein ISD Klenk ES AHU replacements			Sales Engineer:			13600 Industrial Park Blvd, Minneapolis, MN 55441
Model: CAH015GMAM	Jan. 17, 2026	Ver/Rev:	Sheet: 1 of 1	Scale: NTS	Tolerance: +/-0.25"	Dwg Units: in	www.DaikinApplied.com Software Version: 13.91

All opening dimensions have a 1" mounting flange along the inner edge. The actual airflow area of the opening is 2" smaller in each dimension.

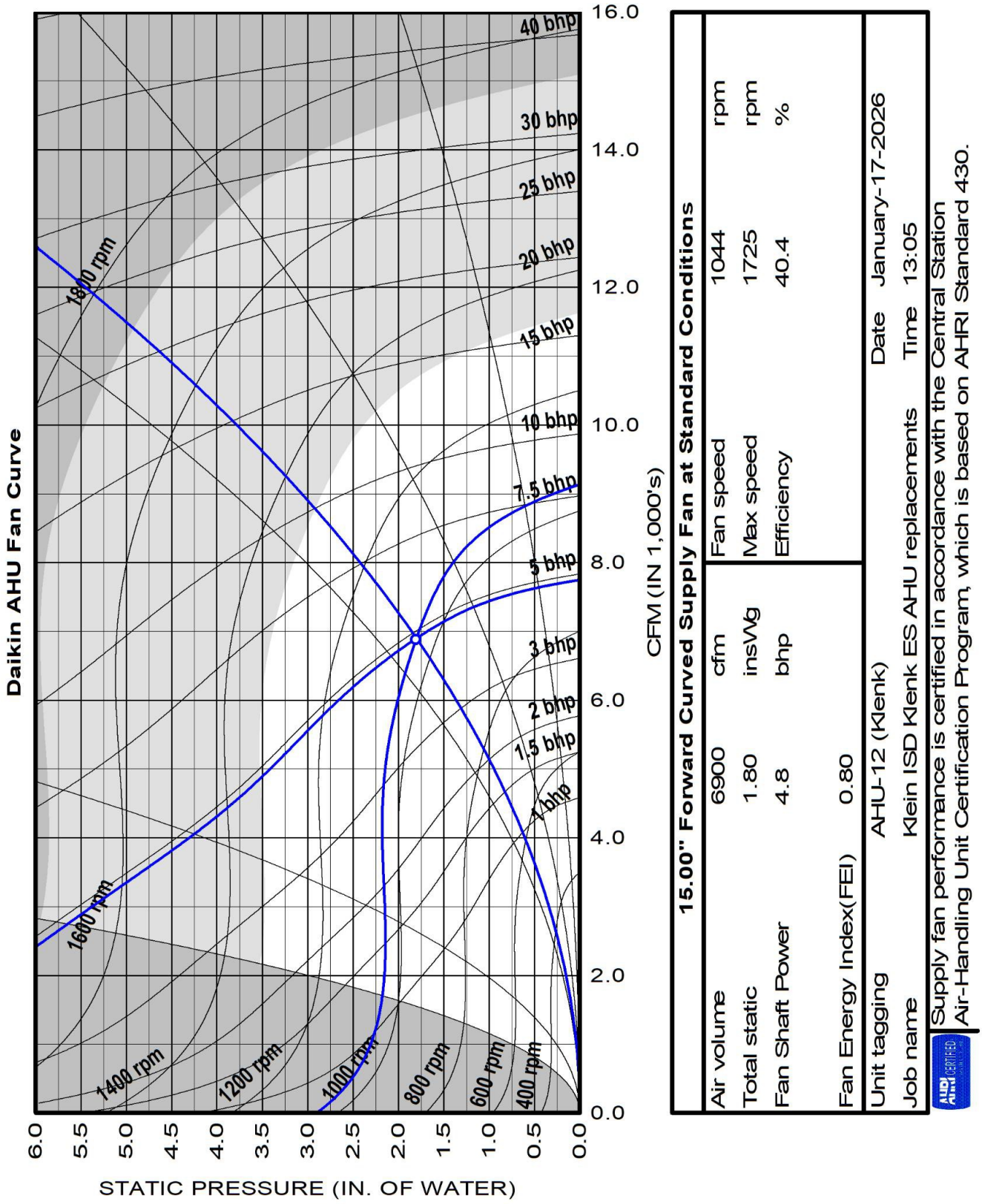

15.00" Forward Curved Supply Fan at Standard Conditions

Air volume	6900	cfm	Fan speed	1044	rpm
Total static	1.80	insWg	Max speed	1725	rpm
Fan Shaft Power	4.8	bhp	Efficiency	40.4	%
Fan Energy Index(FEI)	0.80				

Unit tagging AHU-12 (Klenk) Date January-17-2026

Job name Klein ISD Klenk ES AHU replacements Time 13:05

Supply fan performance is certified in accordance with the Central Station Air-Handling Unit Certification Program, which is based on AHRI Standard 430.

Job Information	Technical Data Sheet
Job Name	Klein ISD Klenk ES AHU replacements
Date	January 17 2026
Submitted By	Salas O'Brien
Software Version	13.91
Unit Tag	AHU-12 Filter

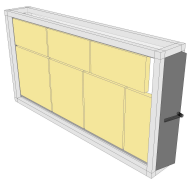

Unit Overview

Model Number	Supply					
	Air Volume cfm	Static Pressure		External Dimensions		
		External inWc	Total inWc	Height in	Width in	Length in
CAC016GVAM	6900	0.95	0.00	42*	80*	12

**Not including base rails, coil connectors, drain connectors and control boxes.*

Unit

Model Number:	CAC016GVAM		
Approval:	ETL Listed / ETL Listed to Canadian Safety Standards (ETL Label / ETLc Label)		
Outer Panel:	18 gauge G90 Galvanized Steel (unpainted)		
Liner:	24 gauge Galvanized Steel (unless noted per section)		
Insulation:	R-13 Injected Foam		
Unit Configuration:	Inline horizontal	**Drive (Handling) Location:**	Right
Base:	None	**Wall Thickness:**	2 in
Altitude:	0 ft	**Parts Warranty:**	Additional One Year, Two Year Total

Panel Filter

Component: 1 | Length: 12 in | Shipping Section: 1

Type	Efficiency	Nominal Face Velocity	Actual Face Velocity	Actual Face Area	Air Volume	Filter Loading
Pre Pleat	MERV 13	370 ft/min	395 ft/min	17.5 ft²	6900 cfm	Side

Air Pressure Drop				Number of Filters	Height	Width	Depth
Clean Air	Mean Air	Dirty Air	User Spec				
0.25 inWc	**0.63** inWc	1.00 inWc	N/A	1	24 in	24 in	2 in
				2	24 in	20 in	2 in
				1	24 in	12 in	2 in
				3	12 in	24 in	2 in

Door

Location	Drive Side Door Width	Opp. Drv. Side Door Width	Opening
Both sides	8 in	8 in	Outward

Unit Sound Power (dB)

Type	63 Hz	125 Hz	250 Hz	500 Hz	1000 Hz	2000 Hz	4000 Hz	8000 Hz
Radiated:	64	54	48	41	39	41	46	51
Unit Discharge:	64	54	48	41	39	41	46	51
Unit Return:	64	54	48	41	39	41	46	51

Shipping Section Details

Section	Length in	Weight lb	Corner Weights (lb)				Center of Gravity (in)		
			P1	P2	P3	P4	XX	YY	ZZ
1	12	180	45	45	45	45	6	40	21
Entire Unit	**12**	**180**	**45**	**45**	**45**	**45**	**6**	**40**	**21**

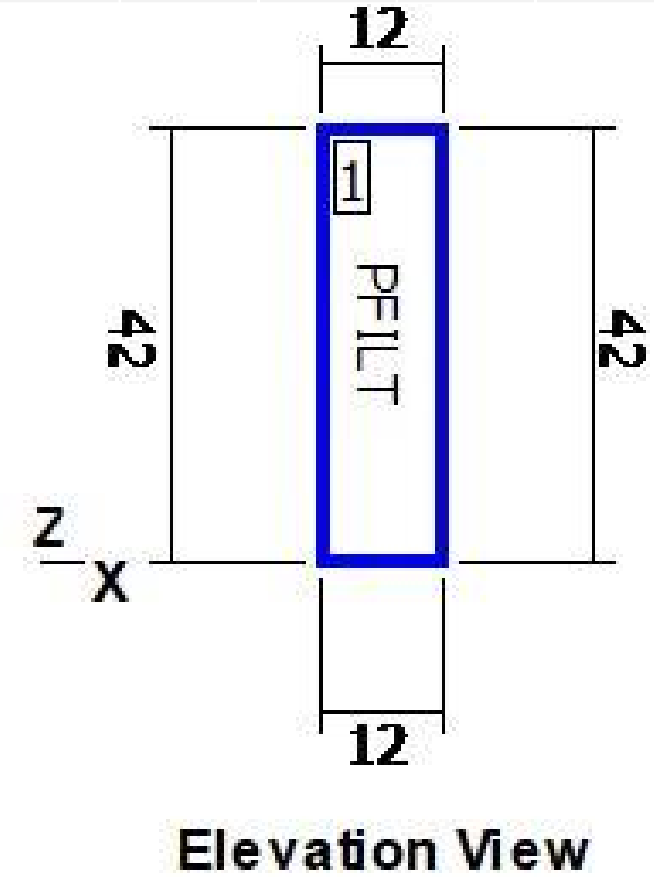

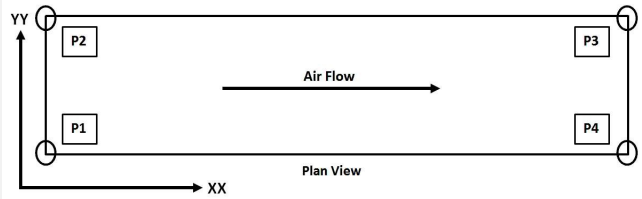

NOTE: Special components aren't included in the corner weights and center of gravity data.

Shipping Protection

None

Supply Static Pressure Drop

Component	Option	Static Pressure Drop
Panel Filter	Panel Filter	0.63 insWg
External Static	External Static	0.95 insWg
Total Supply Fan Static		

AHRI Certification

The air-handler is selected outside of the scope of AHRI Standard 430/431

Notes

Standard

1. As a standalone component, unit meets or exceeds requirements of ASHRAE 90.1 - 2007. The approving authority is responsible for compliance of multi - component building systems.

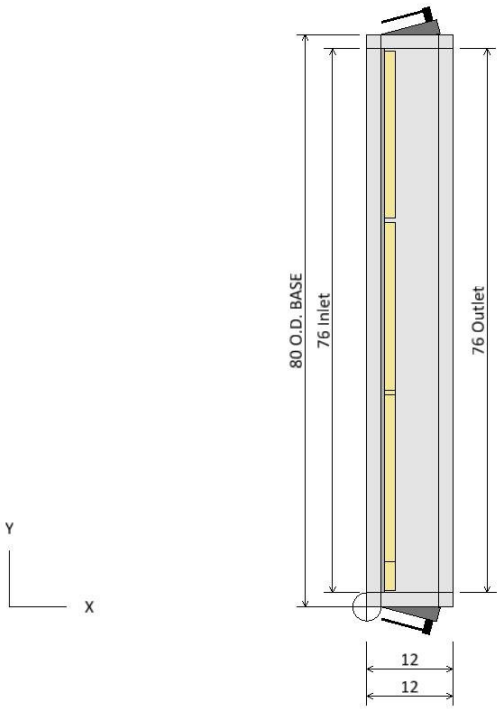

PLAN VIEW

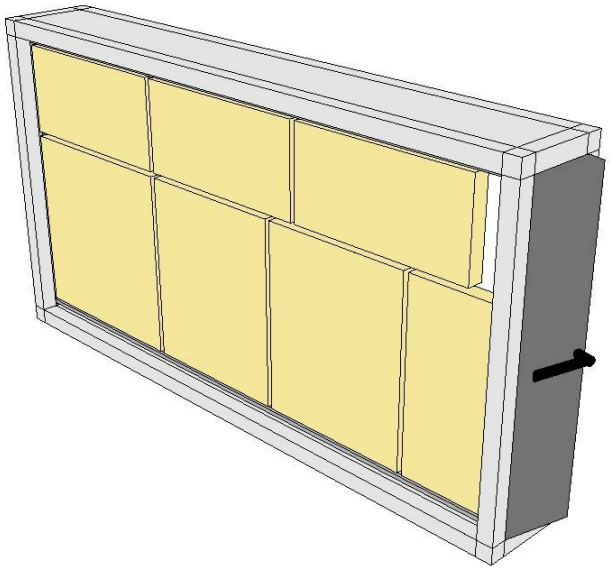

ISOMETRIC VIEW

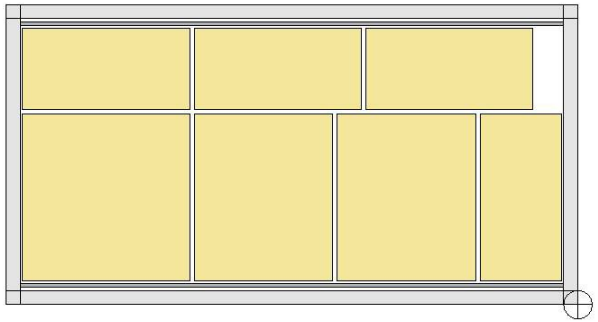

FRONT END VIEW

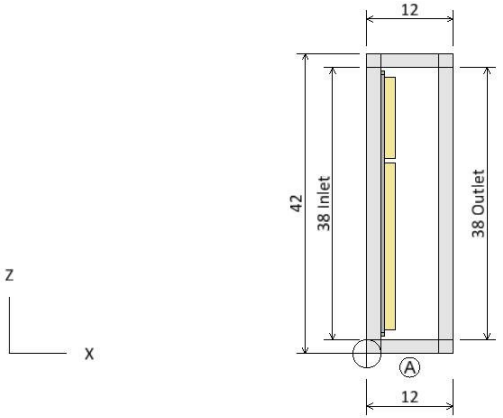

ELEVATION VIEW

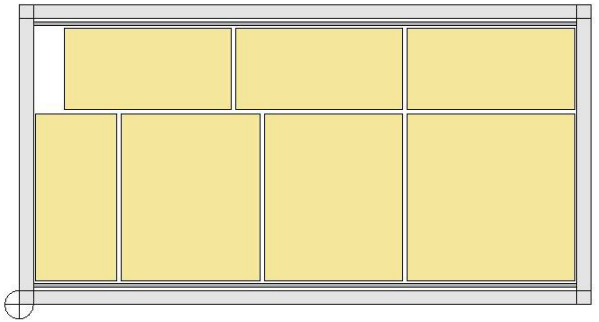

REAR END VIEW

Plan/Elevation	Unit Tag: AHU-12 Filter			Sales Office: HTS Texas		
Product: Vision Air Handler	Project Name: Klein ISD Klenk ES AHU replacements			Sales Engineer:		
Model: CAC016GVAM	Jan. 17, 2026	Ver/Rev:	Sheet: 1 of 1	Scale: NTS	Tolerance: +/-0.25"	Dwg Units: in

DAIKIN
13600 Industrial Park Blvd, Minneapolis, MN 55441
www.DaikinApplied.com Software Version: 13.91

All opening dimensions have a 1" mounting flange along the inner edge. The actual airflow area of the opening is 2" smaller in each dimension.

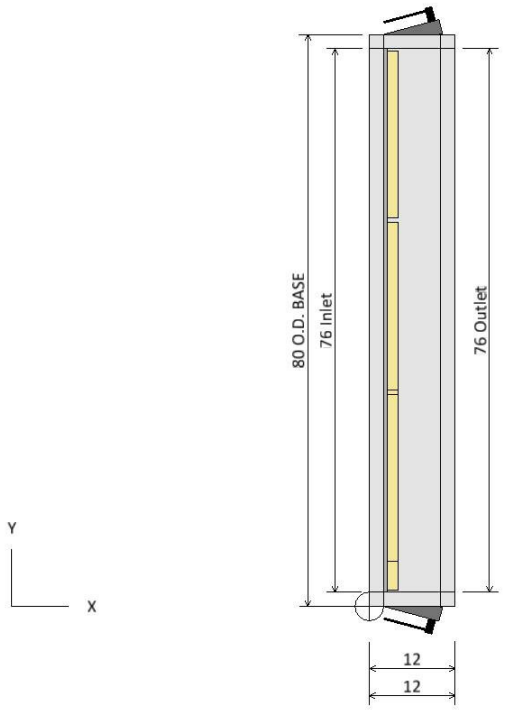

PLAN VIEW

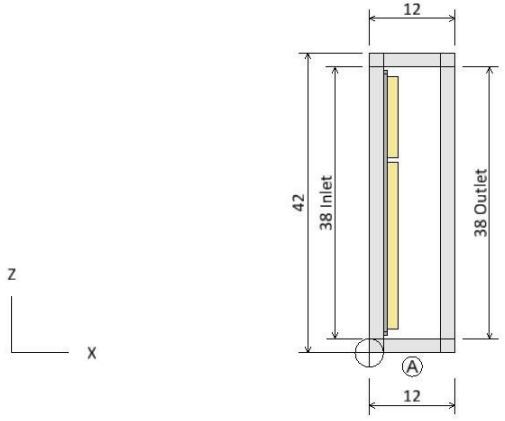

ELEVATION VIEW

Component Key	
Ⓐ	Panel Filter Filter Type: PrePleat (MERV 13) Right Door (WxH): 8 ins x 38 ins Left Door (WxH): 8 ins x 38 ins

Plan/Elevation - No Ends	Unit Tag: AHU-12 Filter			Sales Office: HTS Texas		
Product: Vision Air Handler	Project Name: Klein ISD Klenk ES AHU replacements			Sales Engineer:		
Model: CAC016GVAM	Jan. 17, 2026	Ver/Rev:	Sheet: 1 of 1	Scale: NTS	Tolerance: +/-0.25"	Dwg Units: in

DAIKIN
13600 Industrial Park Blvd, Minneapolis, MN 55441
www.DaikinApplied.com Software Version: 13.91

All opening dimensions have a 1" mounting flange along the inner edge. The actual airflow area of the opening is 2" smaller in each dimension.

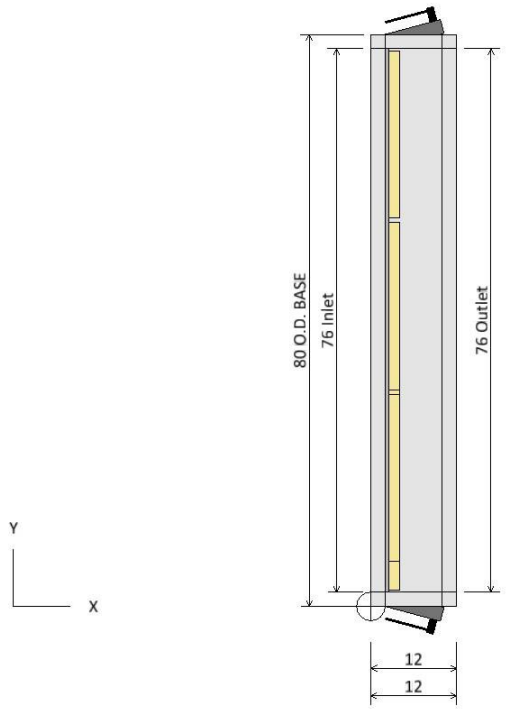

PLAN VIEW

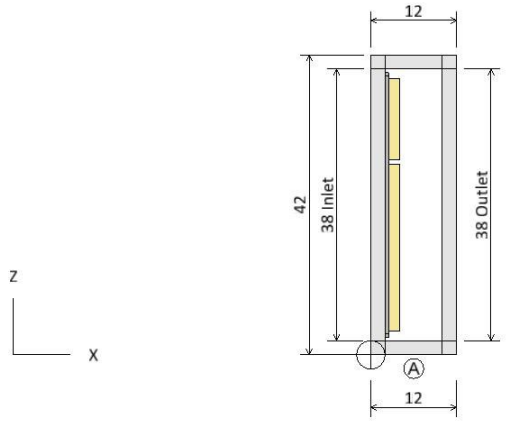

ELEVATION VIEW

Component Key

	Type	X	Y	Z	Wid	Hgt
Ⓐ	Panel Filter Opening	0.00	2.00	2.00	76.00	38.00
	Opening	12.00	2.00	2.00	76.00	38.00

Note: Dimensions are measured from the origin point.
Note: Openings with or without dampers are recessed int the unit by approximately 1.75 in.

Opening/Damper Connections	Unit Tag: AHU-12 Filter			Sales Office: HTS Texas		
Product: Vision Air Handler	Project Name: Klein ISD Klenk ES AHU replacements			Sales Engineer:		
Model: CAC016GVAM	Jan. 17, 2026	Ver/Rev:	Sheet: 1 of 1	Scale: NTS	Tolerance: +/-0.25"	Dwg Units: in

DAIKIN
13600 Industrial Park Blvd, Minneapolis, MN 55441
www.DaikinApplied.com Software Version: 13.91

All opening dimensions have a 1" mounting flange along the inner edge. The actual airflow area of the opening is 2" smaller in each dimension.

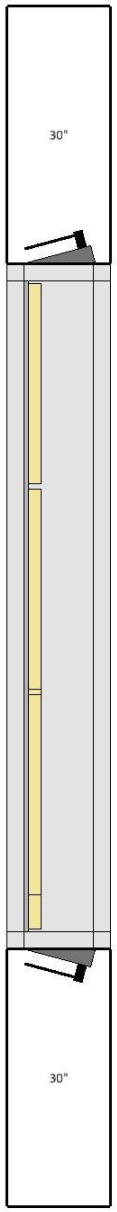

PLAN VIEW

Notes
Check local electrical component service clearance codes for specific distances. Access is only required on one side of the unit.

Service Clearance View	Unit Tag: AHU-12 Filter			Sales Office: HTS Texas		
Product: Vision Air Handler	Project Name: Klein ISD Klenk ES AHU replacements			Sales Engineer:		
Model: CAC016GVAM	Jan. 17, 2026	Ver/Rev:	Sheet: 1 of 1	Scale: NTS	Tolerance: +/-0.25"	Dwg Units: in

DAIKIN
13600 Industrial Park Blvd, Minneapolis, MN 55441
www.DaikinApplied.com Software Version: 13.91

All opening dimensions have a 1" mounting flange along the inner edge. The actual airflow area of the opening is 2" smaller in each dimension.

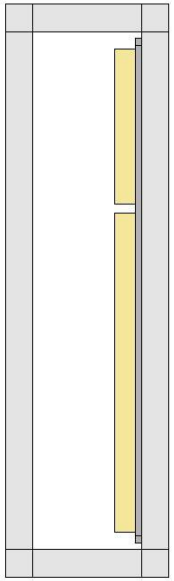

LEFT ELEVATION VIEW

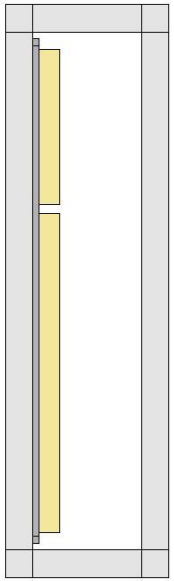

RIGHT ELEVATION VIEW

Coil and Drain Connections

Note: Dimensions are measured from the origin point.

Coil and Drain Connections	Unit Tag: AHU-12 Filter			Sales Office: HTS Texas		
Product: Vision Air Handler	Project Name: Klein ISD Klenk ES AHU replacements			Sales Engineer:		
Model: CAC016GVAM	Jan. 17, 2026	Ver/Rev:	Sheet: 1 of 1	Scale: NTS	Tolerance: +/-0.25"	Dwg Units: in

DAIKIN
13600 Industrial Park Blvd, Minneapolis, MN 55441
www.DaikinApplied.com Software Version: 13.91

All opening dimensions have a 1" mounting flange along the inner edge. The actual airflow area of the opening is 2" smaller in each dimension.

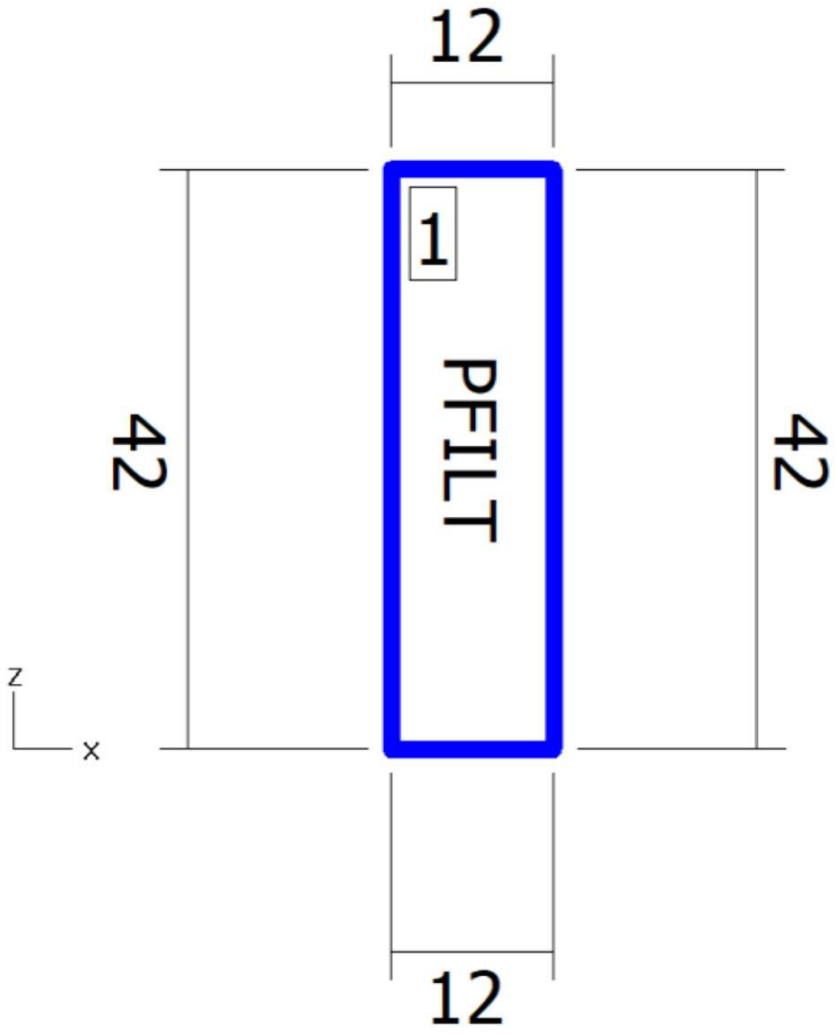

Elevation View

Shipping Sections

Section	Weight (lb)	X	Y	Z
Section 1	180.06	12	80	42
Total Unit	180.06	12	80	42

Note: Base rails, curb ready base, coil connectors, drain connectors, and control boxes not included in height X, Y, Z dimensions.
Shipping section may be 2" longer in air flow direction due to internal splice joint.

Shipping Sections	Unit Tag: AHU-12 Filter			Sales Office: HTS Texas		
Product: Vision Air Handler	Project Name: Klein ISD Klenk ES AHU replacements			Sales Engineer:		
Model: CAC016GVAM	Jan. 17, 2026	Ver/Rev:	Sheet: 1 of 1	Scale: NTS	Tolerance: +/-0.25"	Dwg Units: in

DAIKIN
13600 Industrial Park Blvd, Minneapolis, MN 55441
www.DaikinApplied.com Software Version: 13.91

All opening dimensions have a 1" mounting flange along the inner edge. The actual airflow area of the opening is 2" smaller in each dimension.

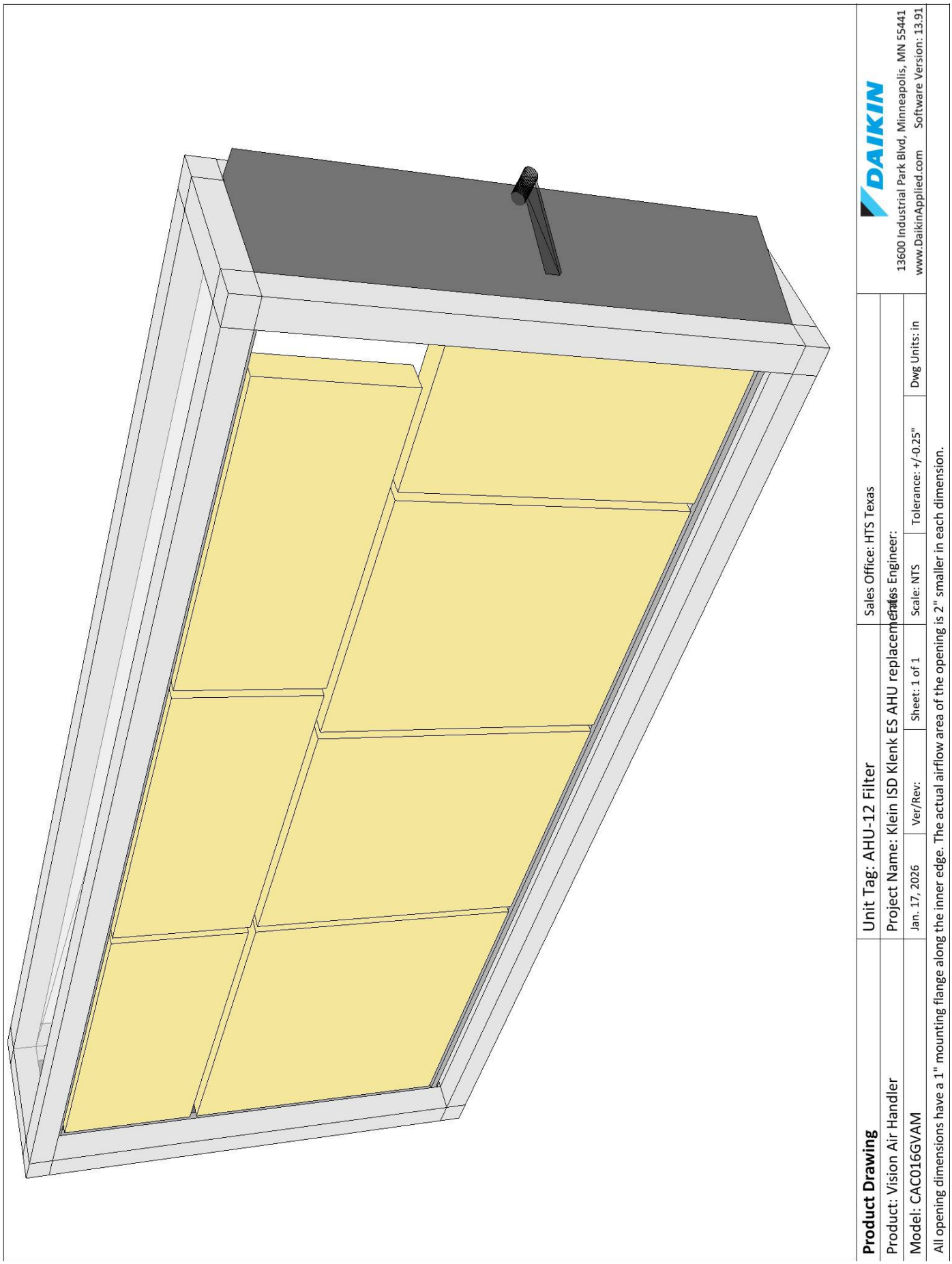

Product Drawing	Unit Tag: AHU-12 Filter	Sales Office: HTS Texas
Product: Vision Air Handler	Project Name: Klein ISD Klenk ES AHU replacement	Sales Engineer:
Model: CAC016GVAM	Jan. 17, 2026 | Ver/Rev: | Sheet: 1 of 1 | Scale: NTS | Tolerance: +/-0.25" | Dwg Units: in	

All opening dimensions have a 1" mounting flange along the inner edge. The actual airflow area of the opening is 2" smaller in each dimension.

DAIKIN
13600 Industrial Park Blvd, Minneapolis, MN 55441
www.DaikinApplied.com Software Version: 13.91

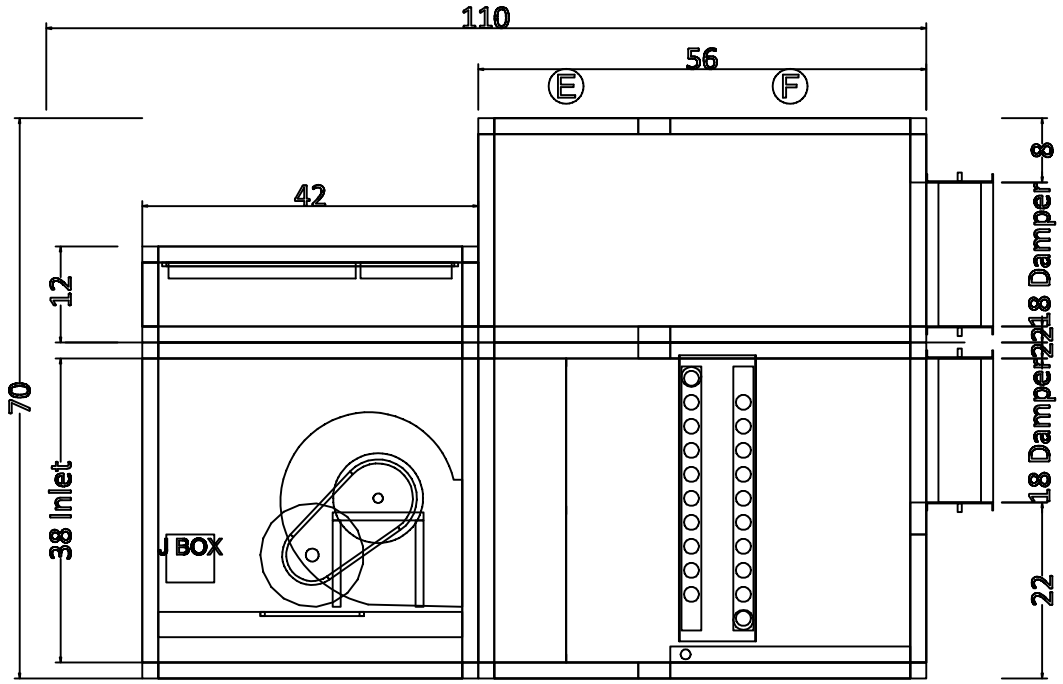

ELEVATION VIEW

Plan/Elevation - No Ends	Unit Tag: AHU-11 (Klenk)			Sales Office: HTS Texas			DAIKIN
Product: Vision Air Handler	Project Name: Klein ISD Klenk ES AHU replacements			Sales Engineer:			13600 Industrial Park Blvd, Minneapolis, MN 55441
Model: CAH020GMAM	Jan. 17, 2026	Ver/Rev:	Sheet: 1 of 1	Scale: NTS	Tolerance: +/-0.25"	Dwg Units: in	www.DaikinApplied.com Software Version: 13.91

All opening dimensions have a 1" mounting flange along the inner edge. The actual airflow area of the opening is 2" smaller in each dimension.

HTS Texas
3350 Yale Street
Houston, Texas 77018
P 832.328.1010
F 832.328.1460

SUBMITTAL DATA
APPROVAL REQUIRED

PROJECT	:	Klein ISD Nitsch 2025 FRP
HTS JOB NUMBER	:	22513311 - MECH
SOLD TO	:	TBD
MECHANICAL CONSULTANT	:	Salas O'Brien
SHIPPING ADDRESS	:	TBD
HTS SALESPERSON	:	Matt McPherson
DATE	:	01/16/2026
REVISION NUMBER	:	00
SPECIFICATION SECTION	:	23 73 13
STANDARD LEAD TIME	:	

TAG	QTY	DESCRIPTION	MODEL	MANUFACTURER
AHU-PE-1	1	DX Air Handling Unit	Vision	Daikin Applied

APPROVAL STAMPS



SUBMITTAL DATA

Job Name	Klein ISD Nitsch ES AHU replacements
For	
Sold To	
Prepared For	
Customer PO#	
Prepared By	Erick Beltran
Date	1/16/2026

Table of Contents

Daikin Section Divider 3

Technical Data Sheet - AHU-PE-1 (Nitsch) Final 4

Drawing - AHU-PE-1 (Nitsch) Final 9

Fan Curve - AHU-PE-1 (Nitsch) Final 17


DAIKIN

Job Information	Technical Data Sheet
Job Name	Klein ISD Nitsch ES AHU replacements
Date	January 16 2026
Submitted By	Salas O'Brien
Software Version	13.82
Unit Tag	AHU-PE-1 (Nitsch) Final

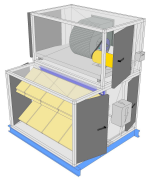

Unit Overview

Model Number	Supply					
	Air Volume cfm	Static Pressure		External Dimensions		
		External inWc	Total inWc	Height in	Width in	Length in
CAH020GDAM	8300	0.75	2.26	52*	78*	74**

**Not including base rails, coil connectors, drain connectors and control boxes.*

***Total lower deck length.*

Unit

Model Number:	CAH020GDAM		
Approval:	ETL Listed / ETL Listed to Canadian Safety Standards (ETL Label / ETLc Label)		
Outer Panel:	18 gauge G90 Galvanized Steel (unpainted)		
Liner:	24 gauge Galvanized Steel (unless noted per section)		
Insulation:	R-13 Injected Foam		
Unit Configuration:	Stacked / vertical	**Drive (Handling) Location:**	Right
Base:	6" formed channel	**Wall Thickness:**	2 in
Altitude:	0 ft	**Parts Warranty:**	Additional One Year, Two Year Total

Panel Filter

Component: 1 | Length: 30 in | Shipping Section: 1

Type	Efficiency	Nominal Face Velocity	Actual Face Velocity	Actual Face Area	Air Volume	Filter Loading
Pre Pleat	MERV 13	231 ft/min	232 ft/min	35.8 ft²	8300 cfm	Side

Air Pressure Drop				Number of Filters	Height	Width	Depth
Clean Air	Mean Air	Dirty Air	User Spec				
0.12 inWc	**0.56** inWc	1.00 inWc	N/A	3	24 in	24 in	2 in
				6	24 in	20 in	2 in
				3	24 in	12 in	2 in

Door

Location	Drive Side Door Width	Opp. Drv. Side Door Width	Opening
Both sides	26 in	26 in	Outward

Direct Expansion Coil	Component: 2	Length: 44 in	Shipping Section: 1

Coil Model	Total Capacity	Sensible Capacity	Number of Coils	Number of Rows	Fins per Inch	Tube Diameter	Tube Spacing (Face x Row)
4EJ1206B014	329633 Btu/hr	235924 Btu/hr	1	6	12	0.500 in	1.50 in x 1.299 in

Coil Operating Weight
575 lb

Air Volume	Air Temperature				Coil Air Pressure Drop	Finned Height	Finned Length	Face Area	Face Velocity
	Entering		Leaving						
	Dry Bulb	Wet Bulb	Dry Bulb	Wet Bulb					
8300 cfm	78.2 °F	65.2 °F	51.6 °F	51.3 °F	0.82 insWg	42.50 in	65.00 in	19.18 ft²	433 ft/min

Fluid		Sub-Cooled Refrigerant Liquid Temp.	Suction Vapor Superheat Temp. at Coil Outlet	Design Saturated Condensing Temp.	Total Refrigerant Weight	Total Coil Volume
Suction Temp.	Refrigerant					
45.0 °F	R32	110.0 °F	8.0 °F	110.0 °F	10.00 lb	1.64 ft³

Connection [Data Per Coil]					Min. Fin Surface Temp.	Min. Tube Wall Surface Temp.
Type	Liquid [Qty - Size]	Suction [Qty - Size]	Location	Material		
OD Sweat	2-0.875 in	2-1.375 in	Drive side	Copper tube	32.0 °F	32.0 °F

Material				Drain Pan	Drain Side
Fin	Tube	Header	Case		
Aluminum .0075 in	Copper .020 in	Copper	Stainless steel	Stainless steel	Drive side

Control Panel			
Location:	Factory Installed	Voltage:	120
Height x Width x Depth:	16.00 in x 12.00 in x 9.00 in	MCA:	2A
Equipment:	Leak Detection	MOP:	10A
Enclosure:	NEMA 3	Wiring Harness:	Factory Wired

Total Refrigerant Weight is the total for all circuits of all coils in this coil section and is estimated. Refer to the AHU and Condensing Unit IOMs for recommendations on system start-up.

Minimum allowable face velocity = 150 fpm

80% liquid to 20% vapor is the assumption used for the charge calculation.

Volume includes coil fin pack and header.

Harness is wired from refrigerant sensor to the refrigerant detection control panel. A separate field connection is required for 120V power.

AHRI 410 Certification
Coil is NOT certified by AHRI

Door			
Location	Drive Side Door Width	Opp. Drv. Side Door Width	Opening
Both sides	18 in	28 in	Outward

Supply Fan

Component: 3 | Length: 46 in | Shipping Section: 2

Fan Performance

Air Volume	Static Pressure			Fan Energy Index(FEI)	Total Input Power	Fan Shaft Power	Fan Wheel Speed		Outlet Velocity
	External	Total	Cabinet				Operating	Maximum	
8300 cfm	0.75 inWc	2.26 inWc	0.13 inWc	1.01	5.2 kW	5.51 BHP	878 rpm	1450 rpm	2872 ft/min

Fan Data

Fan Type	Blade Type / Class	Quantity of Fans	Wheel Diameter	Number of Blades	Discharge	Motor Location
Centrifugal DWDI	Forward Curved / 2	1	18.03 in	N/A	Top horizontal	To Side of Fan

Motor Data

Power	Electrical Supply	Speed	Efficiency	Enclosure	Frame Size	Supplier	Number of Poles	Lock Rotor Current	Full Load Current
10.0 HP	460/60/3 V/Hz/Phase	1750 rpm	Premium	TEFC	215 T frame	Generic	4	106.62 A	12.50 A

Fan Options

Shaft Grounding Kit:	Provided	**Isolator Type:**	Spring

Drive Package Data*

Fan Sheave	Motor Sheave	Belt	Number of Belts	Actual Drive S.F.	Bearing Type
2B5V94	2BK52H	BX46	2	1.32	Standard - L50 (200K)

**Daikin Applied reserves the right to provide a different but equivalent drive package*

VFD/Starter/Disconnect Data

Selection Type:	External J-Box	**Vendor:**	Factory Standard
Voltage:	460 V	**Height x Width x Depth:**	6.00 in x 6.00 in x 4.00 in
Mounting:	Door Side	**Enclosure:**	NEMA 1

Door

Location	Drive Side Door Width	Opp. Drv. Side Door Width	Opening
Both sides	30 in	30 in	Outward

Unit Sound Power (dB)

Type	63 Hz	125 Hz	250 Hz	500 Hz	1000 Hz	2000 Hz	4000 Hz	8000 Hz
Radiated:	73	73	63	62	57	49	46	51
Unit Discharge:	83	83	81	83	79	77	74	69
Unit Return:	78	77	74	76	71	69	64	57

Shipping Section Details

Section	Length in	Weight lb	Corner Weights (lb)				Center of Gravity (in)		
			P1	P2	P3	P4	XX	YY	ZZ
1	74	1646	405	383	418	441	39	38	28
2	46	1056	324	229	204	299	22	32	22
Entire Unit	**74** *Lower level only*	**2702**	**n/a**	**n/a**	**n/a**	**n/a**	**n/a**	**n/a**	**n/a**

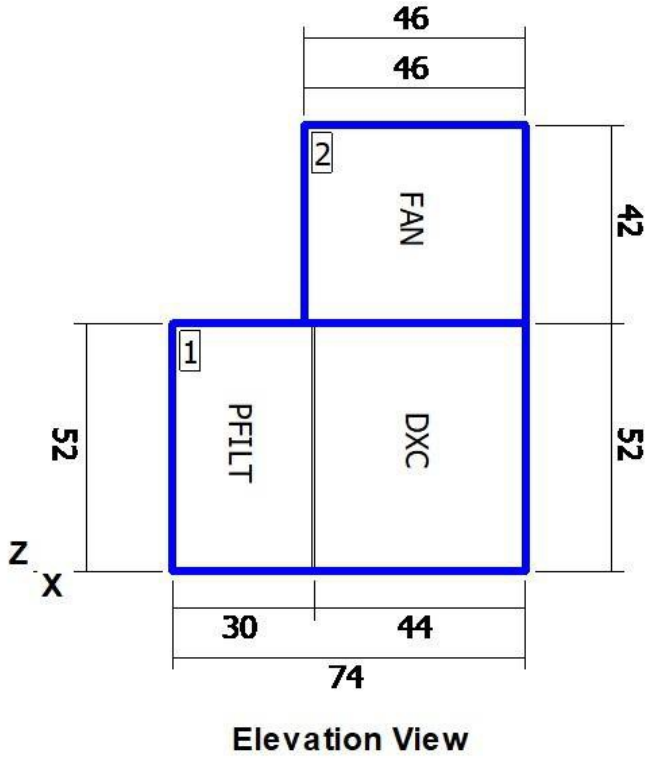

Elevation View

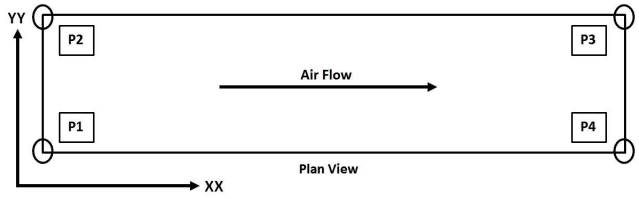

NOTE: Special components aren't included in the corner weights and center of gravity data.

Shipping Protection	None

Supply Static Pressure Drop

Component	Option	Static Pressure Drop
Panel Filter	Panel Filter	0.56 insWg
DX Coil	DX Coil	0.82 insWg
Supply Fan	Cabinet	0.13 insWg
External Static	External Static	0.75 insWg
Total Supply Fan Static		2.26 insWg

Minimum Recommended Drain Pan Trap Dimensions

Shipping Section	Component	H
1	DX Coil	3.26

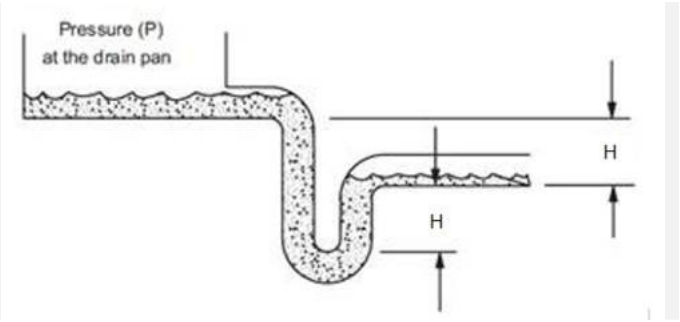

Dimensions provided as a courtesy and are recommended minimums only. Daikin is not responsible for supplying or designing drain pan traps and is not responsible for any damage caused by incorrect trap heights. The dimensions listed above should be reviewed and approved by a licensed plumbing professional.

AHRI Certification

Certified by the AHRI Central Station Air-Handling Unit (AHU) Certification Program, which is based on AHRI Standard 430/431. AHRI certified units are subject to rigorous and continuous testing, have performance ratings independently measured and are third-party verified. Certified units may be found in the AHRI Directory at www.ahridirectory.org.

Notes

Standard
1. As a standalone component, unit meets or exceeds requirements of ASHRAE 90.1 - 2007. The approving authority is responsible for compliance of multi - component building systems.

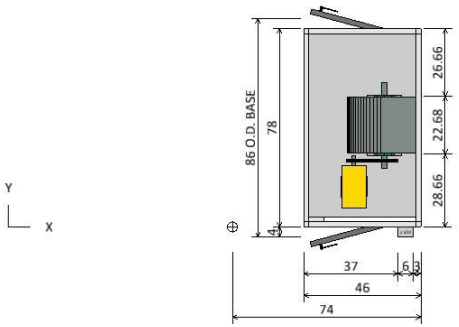

TOP DECK PLAN VIEW

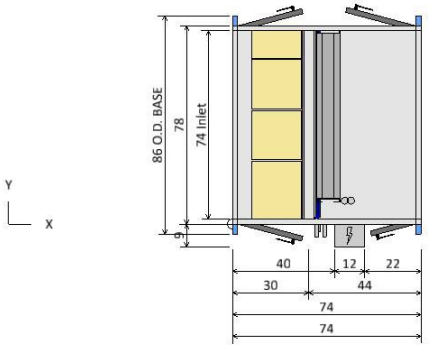

BOTTOM DECK PLAN VIEW

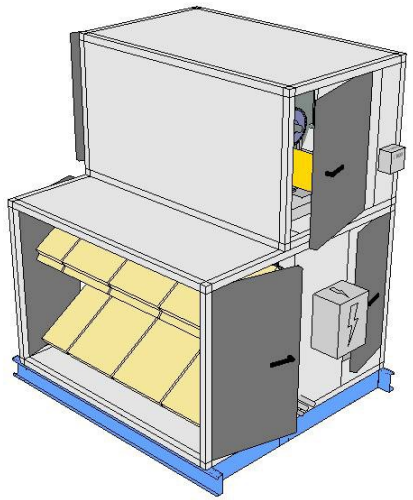

ISOMETRIC VIEW

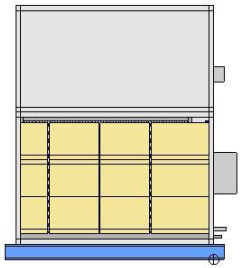

FRONT END VIEW

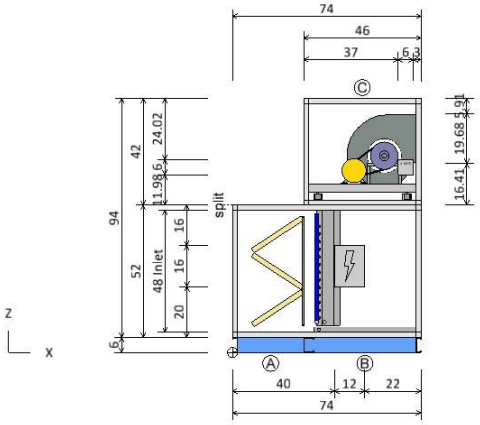

ELEVATION VIEW

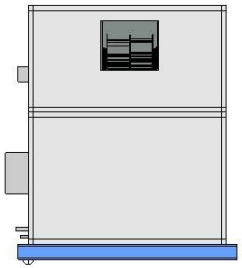

REAR END VIEW

Product Drawing	Unit Tag: AHU-PE-1 (Nitsch) Final			Sales Office: HTS Texas		
Product: Vision Air Handler	Project Name: Klein ISD Nitsch ES AHU replacements			Sales Engineer:		
Model: CAH020GDAM	Jan. 16, 2026	Ver/Rev:	Sheet: 1 of 1	Scale: NTS	Tolerance: +/-0.25"	Dwg Units: in

DAIKIN
13600 Industrial Park Blvd, Minneapolis, MN 55441
www.DaikinApplied.com Software Version: 13.82

All opening dimensions have a 1" mounting flange along the inner edge. The actual airflow area of the opening is 2" smaller in each dimension.

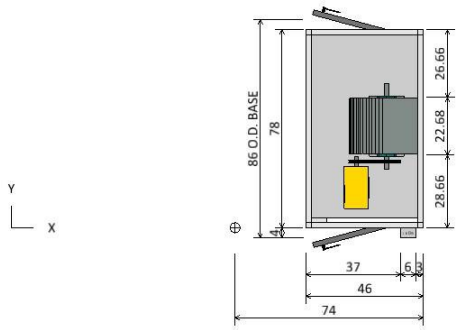

TOP DECK PLAN VIEW

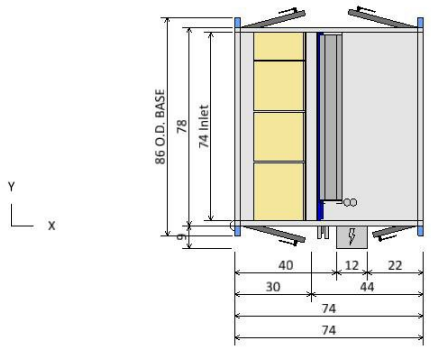

BOTTOM DECK PLAN VIEW

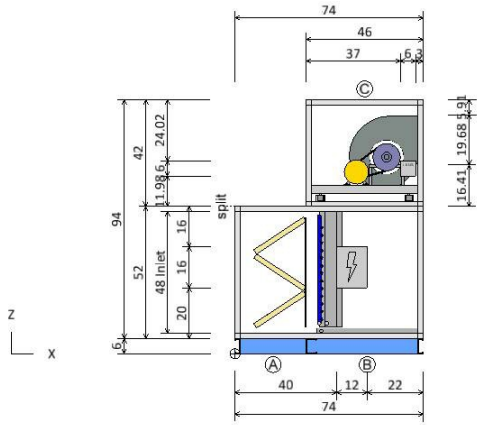

ELEVATION VIEW

Component Key		
Ⓐ	Panel Filter	
	Filter Type:	PrePleat (MERV 13)
	Right Door (WxH):	26 ins x 48 ins
	Left Door (WxH):	26 ins x 48 ins
Ⓑ	DX Coil	
	Coil Model:	4EJ1206B014
	Total Capacity:	329633.0 Btu/hr
	Right Door (WxH):	18 ins x 42 ins
	Left Door (WxH):	28 ins x 42 ins
Ⓒ	Supply Fan	
	Fan Type:	Centrifugal DWDI
	Fan Size (Class):	18 (2)
	Air Flowrate:	8300.0 cfm
	T.S.P:	2.3 insWg
	Motor Power:	10.0 HP
	Right Door (WxH):	30 ins x 38 ins
	Left Door (WxH):	30 ins x 38 ins

Product Drawing	Unit Tag: AHU-PE-1 (Nitsch) Final			Sales Office: HTS Texas		
Product: Vision Air Handler	Project Name: Klein ISD Nitsch ES AHU replacements			Sales Engineer:		
Model: CAH020GDAM	Jan. 16, 2026	Ver/Rev:	Sheet: 1 of 1	Scale: NTS	Tolerance: +/-0.25"	Dwg Units: in

DAIKIN
13600 Industrial Park Blvd, Minneapolis, MN 55441
www.DaikinApplied.com Software Version: 13.82

All opening dimensions have a 1" mounting flange along the inner edge. The actual airflow area of the opening is 2" smaller in each dimension.

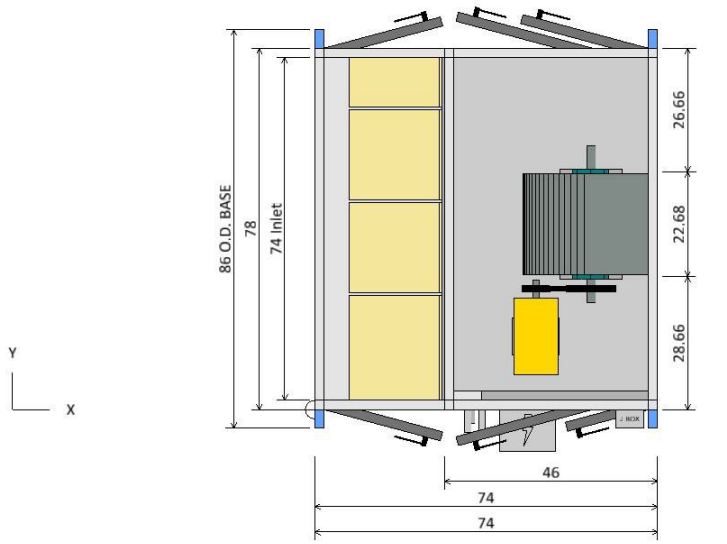

PLAN VIEW

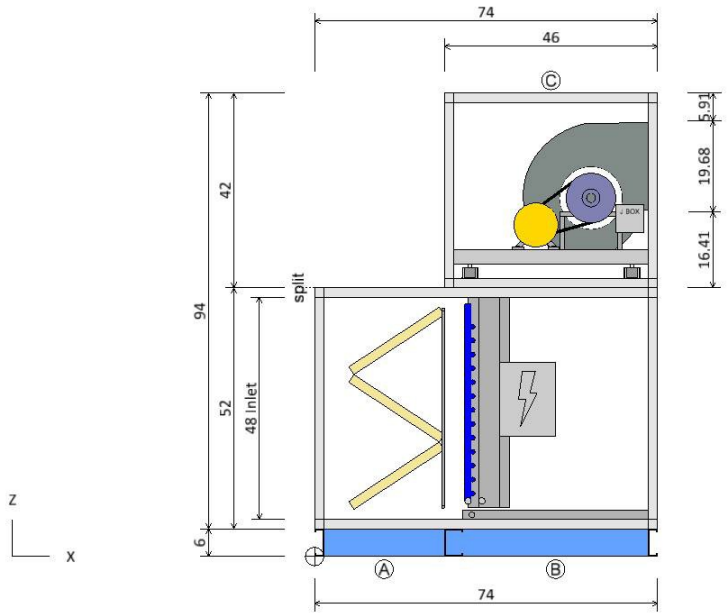

ELEVATION VIEW

Component Key

	Type	X	Y	Z	Wid	Hgt
Ⓐ	Panel Filter Opening	0.00	2.00	8.00	74.00	48.00
Ⓒ	Supply Fan Fan Discharge	74.00	34.66	74.41	22.68	19.68

Note: Dimensions are measured from the origin point.
Note: Openings with or without dampers are recessed into the unit by approximately 1.75 in.

Opening/Damper Connections	Unit Tag: AHU-PE-1 (Nitsch) Final			Sales Office: HTS Texas		
Product: Vision Air Handler	Project Name: Klein ISD Nitsch ES AHU replacements			Sales Engineer:		
Model: CAH020GDAM	Jan. 16, 2026	Ver/Rev:	Sheet: 1 of 1	Scale: NTS	Tolerance: +/-0.25"	Dwg Units: in

DAIKIN
13600 Industrial Park Blvd, Minneapolis, MN 55441
www.DaikinApplied.com Software Version: 13.82

All opening dimensions have a 1" mounting flange along the inner edge. The actual airflow area of the opening is 2" smaller in each dimension.

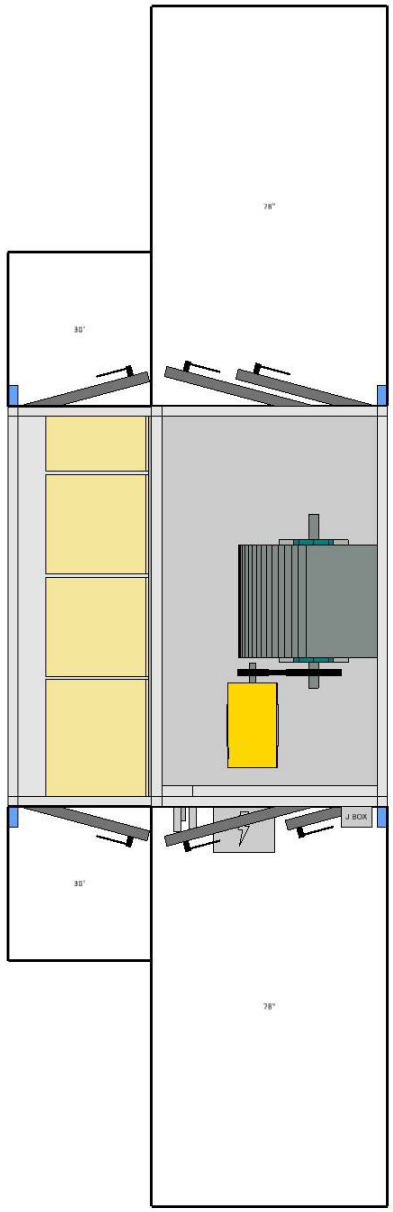

PLAN VIEW

Notes

Check local electrical component service clearance codes for specific distances.

Access is only required on one side of the unit.

Service Clearance View	Unit Tag: AHU-PE-1 (Nitsch) Final			Sales Office: HTS Texas		
Product: Vision Air Handler	Project Name: Klein ISD Nitsch ES AHU replacements			Sales Engineer:		
Model: CAH020GDAM	Jan. 16, 2026	Ver/Rev:	Sheet: 1 of 1	Scale: NTS	Tolerance: +/-0.25"	Dwg Units: in

DAIKIN
13600 Industrial Park Blvd, Minneapolis, MN 55441
www.DaikinApplied.com Software Version: 13.82

All opening dimensions have a 1" mounting flange along the inner edge. The actual airflow area of the opening is 2" smaller in each dimension.

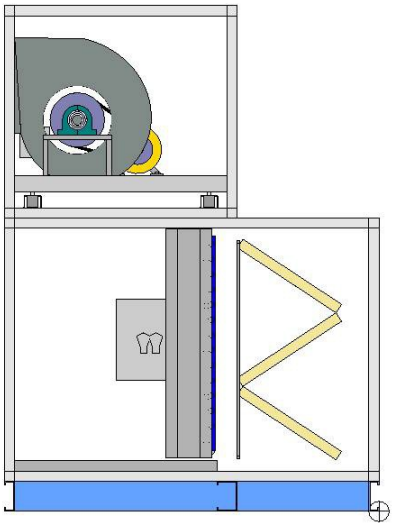

LEFT ELEVATION VIEW

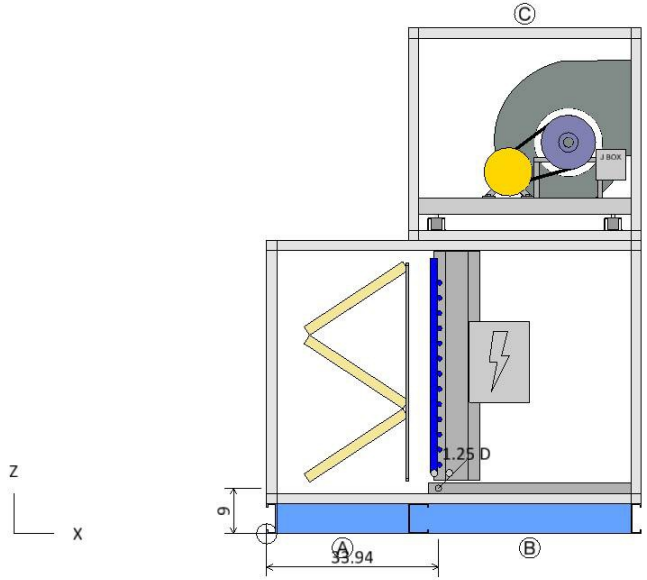

RIGHT ELEVATION VIEW

Coil and Drain Connections

	Type	X	Y	Z	Diam
	DX Coil Condensate drain conn:	33.94	-2.90	9.00	1.25
Ⓑ	DX suction:	TBD	TBD	TBD	2- 1.38
	DX liquid conn:	TBD	TBD	TBD	2- 1.38
	DX liquid conn:	TBD	TBD	TBD	2- 0.88

Note: Dimensions are measured from the origin point.

Coil and Drain Connections	Unit Tag: AHU-PE-1 (Nitsch) Final			Sales Office: HTS Texas		
Product: Vision Air Handler	Project Name: Klein ISD Nitsch ES AHU replacements			Sales Engineer:		
Model: CAH020GDAM	Jan. 16, 2026	Ver/Rev:	Sheet: 1 of 1	Scale: NTS	Tolerance: +/-0.25"	Dwg Units: in

DAIKIN
13600 Industrial Park Blvd, Minneapolis, MN 55441
www.DaikinApplied.com Software Version: 13.82

All opening dimensions have a 1" mounting flange along the inner edge. The actual airflow area of the opening is 2" smaller in each dimension.

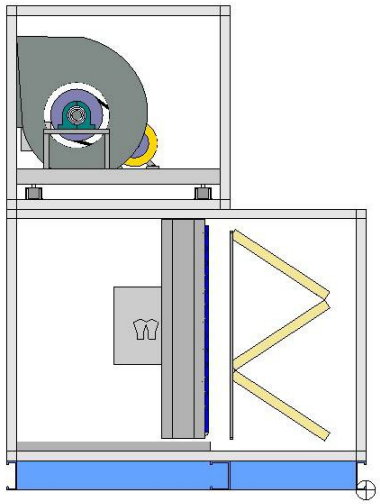

LEFT ELEVATION VIEW

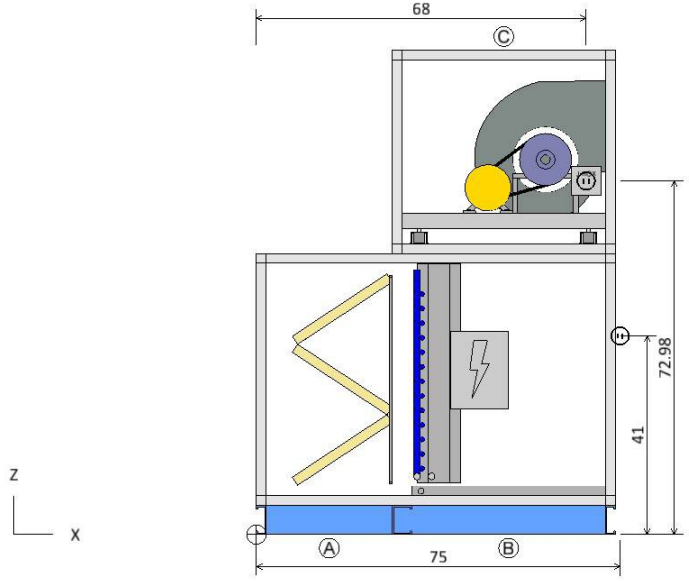

RIGHT ELEVATION VIEW

Component Key

	Type	X	Y	Z	Volts	Phase
Ⓑ	DX Coil DX Control Panel	75.00	0.00	41.00	120	1
Ⓒ	Supply Fan Fan	68.00	0.00	72.98	460	3

Note: Dimensions are measured from the origin point.

Electrical Connections	Unit Tag: AHU-PE-1 (Nitsch) Final			Sales Office: HTS Texas		
Product: Vision Air Handler	Project Name: Klein ISD Nitsch ES AHU replacements			Sales Engineer:		
Model: CAH020GDAM	Jan. 16, 2026	Ver/Rev:	Sheet: 1 of 1	Scale: NTS	Tolerance: +/-0.25"	Dwg Units: in

DAIKIN
13600 Industrial Park Blvd, Minneapolis, MN 55441
www.DaikinApplied.com Software Version: 13.82

All opening dimensions have a 1" mounting flange along the inner edge. The actual airflow area of the opening is 2" smaller in each dimension.

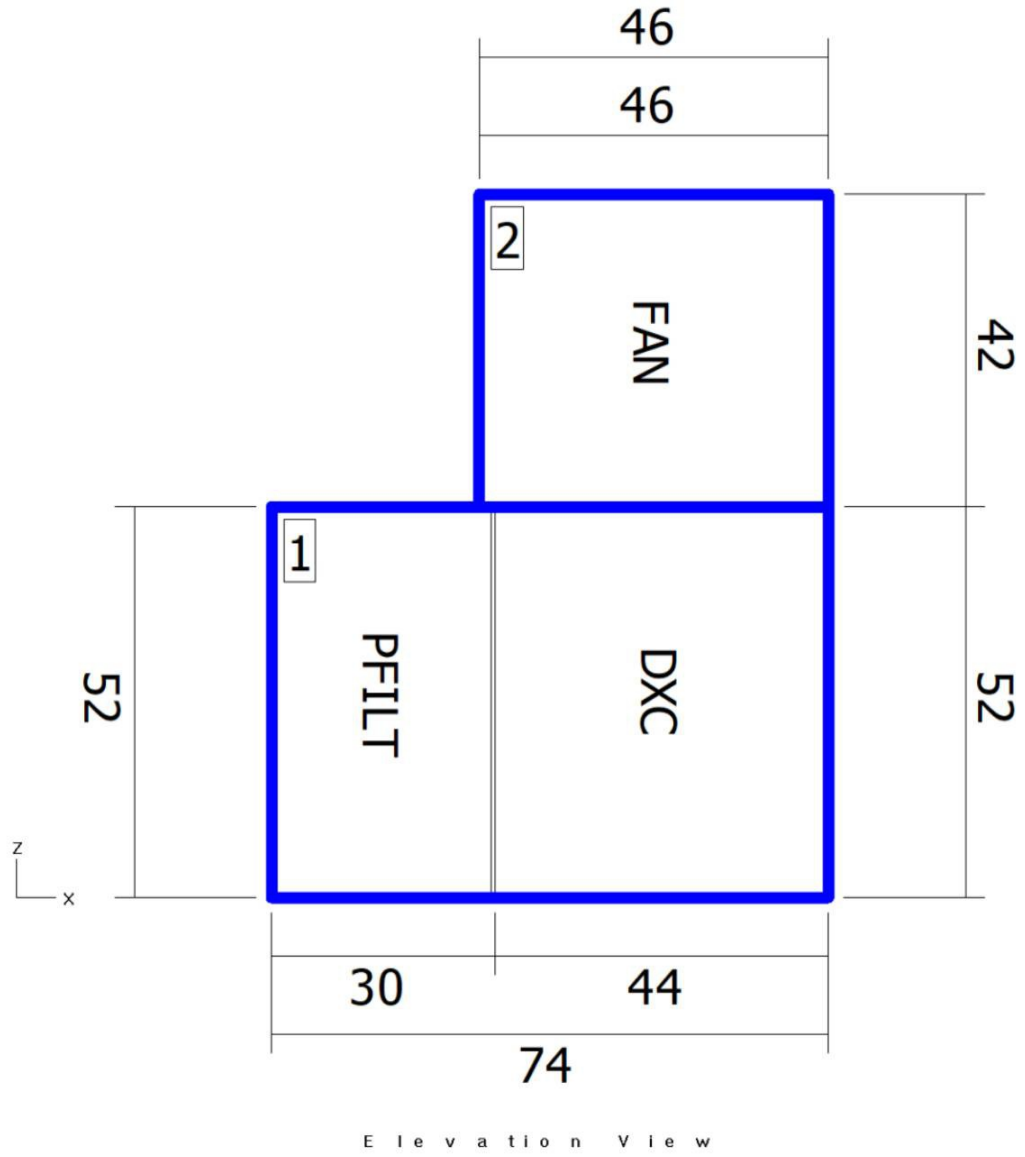

Elevation View

Shipping Sections

Section	Weight (lb)	X	Y	Z
Section 1	1646.48	74	78	52
Section 2	1056.42	46	78	42
Total Unit	2702.90	74	78	94

Note: Base rails, curb ready base, coil connectors, drain connectors, and control boxes not included in height X, Y, Z dimensions. Shipping section may be 2" longer in air flow direction due to internal splice joint.

Shipping Sections	Unit Tag: AHU-PE-1 (Nitsch) Final			Sales Office: HTS Texas		
Product: Vision Air Handler	Project Name: Klein ISD Nitsch ES AHU replacements			Sales Engineer:		
Model: CAH020GDAM	Jan. 16, 2026	Ver/Rev:	Sheet: 1 of 1	Scale: NTS	Tolerance: +/-0.25"	Dwg Units: in

DAIKIN
13600 Industrial Park Blvd, Minneapolis, MN 55441
www.DaikinApplied.com Software Version: 13.82

All opening dimensions have a 1" mounting flange along the inner edge. The actual airflow area of the opening is 2" smaller in each dimension.

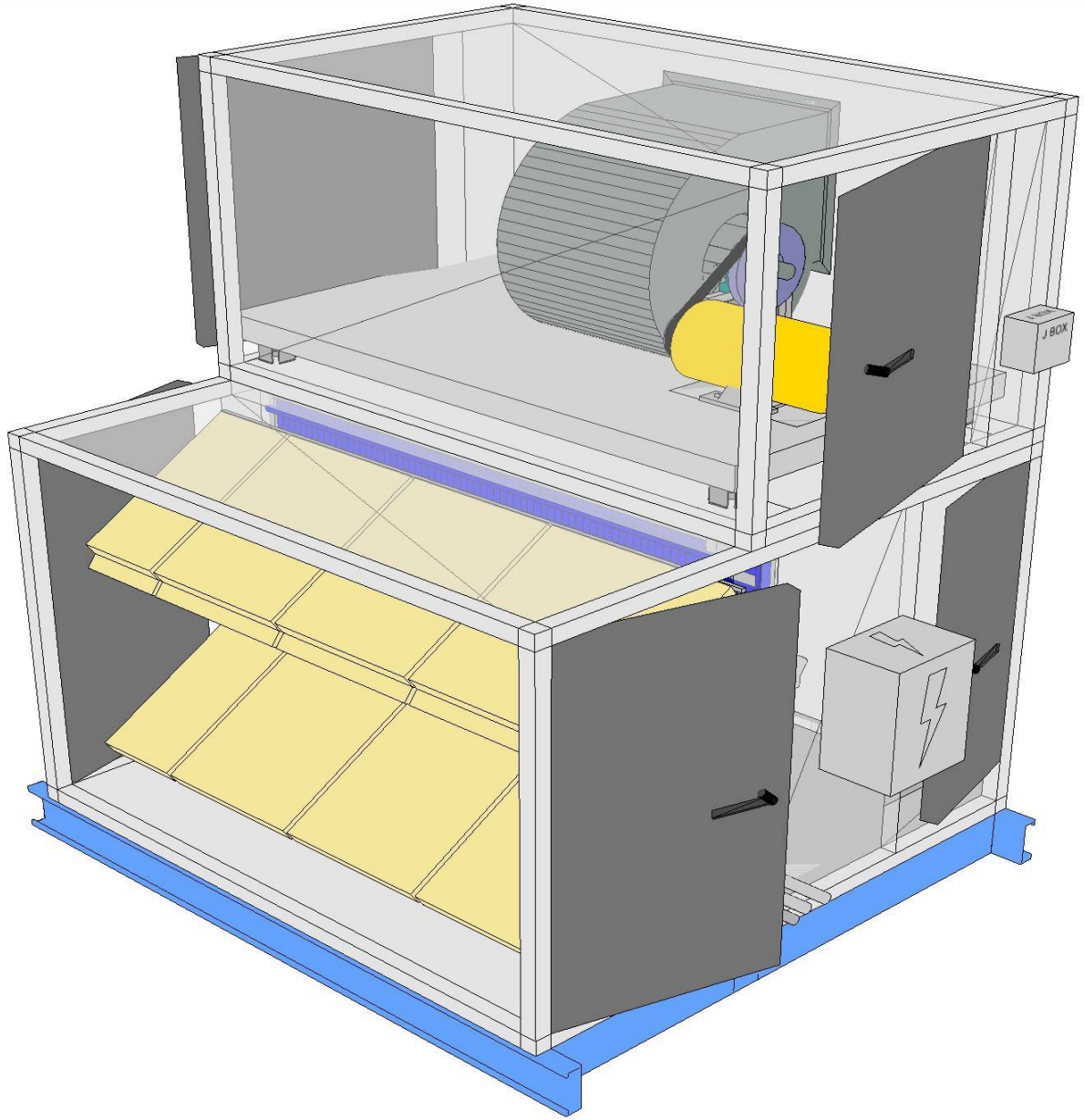

Product Drawing	Unit Tag: AHU-PE-1 (Nitsch) Final			Sales Office: HTS Texas		
Product: Vision Air Handler	Project Name: Klein ISD Nitsch ES AHU replacements			Sales Engineer:		
Model: CAH020GDAM	Jan. 16, 2026	Ver/Rev:	Sheet: 1 of 1	Scale: NTS	Tolerance: +/-0.25"	Dwg Units: in

DAIKIN
13600 Industrial Park Blvd, Minneapolis, MN 55441
www.DaikinApplied.com Software Version: 13.82

All opening dimensions have a 1" mounting flange along the inner edge. The actual airflow area of the opening is 2" smaller in each dimension.

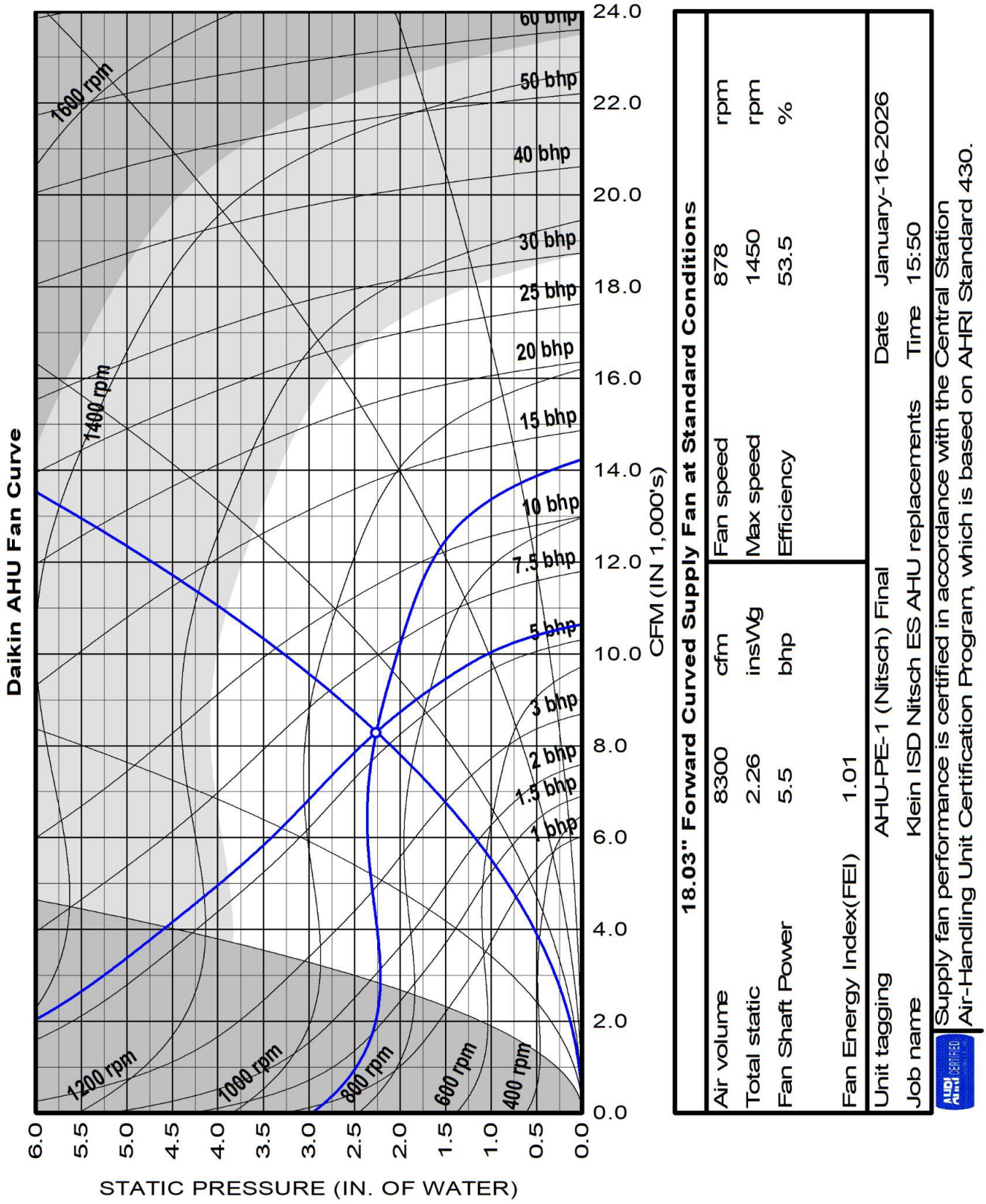
Daikin AHU Fan Curve
STATIC PRESSURE (IN. OF WATER)
CFM (IN 1,000's)
1600 rpm
1400 rpm
1200 rpm
1000 rpm
800 rpm
600 rpm
400 rpm
60 bhp
50 bhp
40 bhp
30 bhp
25 bhp
20 bhp
15 bhp
10 bhp
7.5 bhp
5 bhp
3 bhp
2 bhp
1.5 bhp
1 bhp
18.03" Forward Curved Supply Fan at Standard Conditions
Air volume 8300 cfm
Total static 2.26 insWg
Fan Shaft Power 5.5 bhp
Fan Energy Index(FEI) 1.01
Fan speed 878 rpm
Max speed 1450 rpm
Efficiency 53.5 %
Unit tagging AHU-PE-1 (Nitsch) Final
Date January-16-2026
Job name Klein ISD Nitsch ES AHU replacements
Time 15:50
Supply fan performance is certified in accordance with the Central Station Air-Handling Unit Certification Program, which is based on AHRI Standard 430.

SECTION 23 81 24

02-06-2026 WEATHERPROOF ROOF-MOUNTED AIR HANDLING UNIT (PRE-PURCHASED)

PART 1 - GENERAL

1.1 RELATED DOCUMENTS

A. Drawings and general provisions of Contract, including General and Supplementary Conditions and Division 01, apply to this Section.

B. Refer to Document 00 21 13, Instructions to Bidders and 00 22 13 Supplementary Instructions to Bidders, for substitution of materials and products.

C. Addenda issued during the bidding period that affect this section of the specifications.

1.2 WORK INCLUDED

A. The Contractor shall furnish all labor, supervision, coordination, temporary services, accessories, materials, and incidentals required to receive, store, install, connect, integrate, test, and place into full operational service all pre-purchased HVAC equipment.

B. District procurement of HVAC equipment does not relieve the Contractor of responsibility to deliver complete, operational, code-compliant HVAC systems suitable for use in an occupied K-12 educational facility.

1.3 RELATED WORK

A. Division 23 Mechanical
1. Air Balance
2. Ductwork
3. Controls
4. Electrical Provisions of Mechanical Work
5. Air Filtration
6. Heating and Cooling Coils
7. Other applicable sections

1.4 PRE-PURCHASED EQUIPMENT SUBMITTALS

A. The Owner has provided the reviewed Owner Pre-Purchased Equipment (OPE) submittals for the HVAC equipment included in this Project as included in the Appendix.

B. Provided OPE submittals are issued for reference, coordination, and installation purposes only.

C. The Contractor shall review the provided OPE submittals and shall be responsible for:
1. Coordinating installation requirements, dimensions, weights, clearances, and utility connections.
2. Verifying compatibility with field conditions, structural supports, and renovation constraints.
3. Incorporating OPE requirements into coordination drawings, schedules, and installation planning.

A. Review or distribution of OPE submittals does not:
1. Transfer design responsibility to the District or Architect.
2. Relieve the Contractor of responsibility for proper installation.

B. Discrepancies between OPE submittals and Contract Documents shall be reported in writing prior to installation. Failure to notify constitutes acceptance for installation purposes.

1.5 DELIVERY, STORAGE AND HANDLING

A. Inspect for transportation damage and store in a clean, dry location. Protect from weather and construction traffic.

1.6 ENVIRONMENTAL REQUIREMENTS

A. Do not operate units until ductwork is clean, filters are in place, bearings lubricated, condensate properly tapped, piping connections verified and leak tested, belts aligned and tensioned, all shipping braces have been removed, and fan has been tested under observation.

PART 2 - PRODUCTS

PART 3 - EXECUTION

3.1 INSTALLATION

A. Install air handling units according to manufacturer's instructions.

B. Provide additional drive packages as required by the Testing and Balancing firm.

C. Air leaks detectable by sound or touch are to be corrected.

D. Air handling units are to be properly supported to prevent flexing, bending, or distorting base rails.

E. All coils are to be cleaned prior to substantial completion if units are used during construction.

F. Clean all air handling units and return to original manufacturer's condition prior to substantial completion. Vacuum clean all debris from inside air handling equipment.

G. Install piping to unit with full size 6-inch-long dirt leg with 1/2" valve at bottom for cleaning.

H. Provide for positive gravity drainage of coil condensate. Pipe full size of unit connection.

I. Adjust fan drives as required to obtain scheduled capacities as directed by the Test and Balance Firm to include sheave and belt replacement.

K. Verify correct drainage of condensate from condensate pan.

L. Verify correct rotation of fan and wiring of motor.

M. Lubricate all greaseable ball bearings with manufacturer’s suggested lubricant.

N. Replace filters as required if units are used during construction.

O. Provide piping installation so that after piping is completed and insulated there is full access to service unit and remove fan housing. Piping to coils shall not block fan section access or cause damage to piping insulation during access.

3.2 STARTUP

A. Provide the services of a factory trained service technician employed full time by the unit manufacturer to start-up the system, or manufacturer's factory authorized representative under the supervision of the factory trained service technician. Upon completion of the installation, the system shall be started and commissioned by the manufacturer's factory authorized representative who will verify a complete fully functional system. The factory authorized representative will verify that accessories are installed and performing the specified functions. (Contractor startup is unacceptable.)

B. The written startup report shall be provided to the owner and engineer upon completion.

END OF SECTION

APPENDIX A

OWNER PRE-PURCHASED EQUIPMENT (OPE) SUBMITTALS

HTS Texas
3350 Yale Street
Houston, Texas 77018
P 832.328.1010
F 832.328.1460

SUBMITTAL DATA
APPROVAL REQUIRED

PROJECT	:	Klein ISD Eiland 2025 FRP
HTS JOB NUMBER	:	22513311 - MECH
SOLD TO	:	TBD
MECHANICAL CONSULTANT	:	Salas O'Brien
SHIPPING ADDRESS	:	TBD
HTS SALESPERSON	:	Matt McPherson
DATE	:	01/16/2026
REVISION NUMBER	:	00
SPECIFICATION SECTION	:	23 81 24
STANDARD LEAD TIME	:	

TAG	QTY	DESCRIPTION	MODEL	MANUFACTURER
OAHU-1 thru 5	5	Roof Mounted Air Handling Unit	Skyline	Daikin Applied

APPROVAL STAMPS



SUBMITTAL DATA

Job Name	Klein ISD Eiland ES AHU replacements
For	
Sold To	
Prepared For	
Customer PO#	
Prepared By	Matt McPherson
Date	1/16/2026

Table of Contents

Daikin Section Divider 3

Technical Data Sheet - OAHU-1 & 5 (Eiland) 4

Drawing - OAHU-1 & 5 (Eiland) 8

Fan Curve - OAHU-1 & 5 (Eiland) 16

Technical Data Sheet - OAHU-2 (Eiland) 17

Drawing - OAHU-2 (Eiland) 21

Fan Curve - OAHU-2 (Eiland) 29

Technical Data Sheet - OAHU-3 (Eiland) 30

Drawing - OAHU-3 (Eiland) 35

Fan Curve - OAHU-3 (Eiland) 43

Technical Data Sheet - OAHU-4 (Eiland) 44

Drawing - OAHU-4 (Eiland) 48

Fan Curve - OAHU-4 (Eiland) 56


DAIKIN

Job Information	Technical Data Sheet
Job Name	Klein ISD Eiland ES AHU replacements
Date	January 16 2026
Submitted By	Salas O'Brien
Software Version	13.91
Unit Tag	OAHU-1 (Eiland)

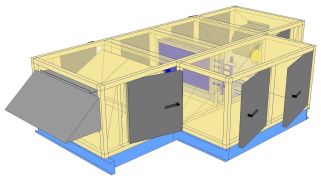

Unit Overview

Model Number	Supply					
	Air Volume cfm	Static Pressure		External Dimensions		
		External inWc	Total inWc	Height in	Width in	Length in
OAH006GDAM	1400	0.60	1.83	32*	50*	142

**Not including base rails, coil connectors, drain connectors, vestibule sections, control boxes and hoods.*

Unit

Model Number:	OAH006GDAM		
Approval:	ETL Listed / ETL Listed to Canadian Safety Standards (ETL Label / ETLc Label)		
Outer Panel:	Painted 18 gauge G60 Galvanized Steel (3000 hr. Salt Spray ASTM B-117)		
Liner:	24 gauge Galvanized Steel (unless noted per section)		
Insulation:	R-13 Injected Foam		
Unit Configuration:	Inline horizontal	**Drive (Handling) Location:**	Right
Base:	Curb ready	**Wall Thickness:**	2 in
Roof Curb Kit:	None	**Altitude:**	0 ft
Parts Warranty:	Additional One Year, Two Year Total		

Mixing Box

Component: 1 | Length: 42 in | Shipping Section: 1

Portion	Damper					Blade Action	Rated CFM	Air Pressure Drop	Quantity	Hoods
	Size (Width x Height)		Location	Type	Actuation					
	Overall	Opening								
Outside Air	46 in x 20 in	34 in x 14 in	End	Ruskin CD60	NA	Opposed	1400 cfm	0.03 insWg	1	Fitted - Field installed
Return Air	No opening	No opening		None		None	1400 cfm		0	

Filter Data

Type	Efficiency	Nominal Face Velocity	Actual Face Velocity	Actual Face Area	Air Volume	Filter Loading
Pre Pleat	MERV 13	95 ft/min	101 ft/min	13.9 ft²	1400 cfm	Side

Air Pressure Drop				Number of Filters	Height	Width	Depth
Clean Air	Mean Air	Dirty Air	User Spec				
0.04 inWc	**0.52** inWc	1.00 inWc	N/A	2	24 in	24 in	2 in
				2	24 in	20 in	2 in

Door

Location	Drive Side Door Width	Opp. Drv. Side Door Width	Opening
Both sides	26 in	26 in	Outward

Electric Heater	Component: 2	Length: 34 in	Shipping Section: 1

Voltage	Control Type	Temperature Control	Control Signal	Pressure Drop	kW	FLA	Steps	Disconnect		Free Air Velocity ft/min
480	SCR	Yes	4 - 20mA	0.05	18	22.59	N/A	Yes		300

Notes

This component section includes equipment that is a potential source of ignition in conjunction with A2L refrigerants. Refer to relevant IOM's regarding proper interlock with required refrigeration detection systems.

Special Options

Sound Baffle

(As casing details)

Chilled Water Coil	Component: 3	Length: 34 in	Shipping Section: 1

Coil Model	Total Capacity	Sensible Capacity	Number of Coils	Number of Rows	Fins per Inch	Tube Diameter	Tube Spacing (Face x Row)
5WH1206C	133777 Btu/hr	70803 Btu/hr	1	6	12	0.625 in	1.50 in X 1.299 in

Coil Operating Weight	Coil Dry Weight
148 lb	113 lb

Air Volume	Air Temperature				Coil Air Pressure Drop	Finned Height	Finned Length	Face Area	Face Velocity
	Entering		Leaving						
	Dry Bulb	Wet Bulb	Dry Bulb	Wet Bulb					
1400 cfm	98.0 °F	79.0 °F	51.8 °F	51.6 °F	0.63 inWc	18 in	37 in	4.62 ft²	303 ft/min

Water

Entering	Leaving	Flow Rate	Pressure Drop	Velocity	Fluid Volume	Fluid Weight	Piping Vestibule
45.0 °F	56.6 °F	23.00 gpm	10.00 ftHd	4.10 ft/s	4.0 gal	35.00 lb	30 in

Connection [Data Per Coil]				Min. Fin Surface Temp.	Min. Tube Wall Surface Temp.	Fouling Factor
Type	Size	Location	Material			
Threaded	1.50 in	Drive side	Carbon steel	45.0 °F	45.0 °F	0.000

Material				Drain Pan	Drain Side
Fin	Tube	Header	Case		
Aluminum .0075 in	Copper .020 in	Copper	Stainless steel	Stainless steel	Opp drive side

AHRI 410 Certification

Certified in accordance with the AHRI Forced-Circulation Air-Cooling and Air-Heating Coils Certification Program which is based on AHRI Standard 410 within the Range of Standard Rating Conditions listed in Table 1 of the Standard. Certified units may be found in the AHRI Directory at www.ahridirectory.org

Door

Location	Width	Opening
Non-drive side	18 in	Outward

Door

Location	Width	Opening
Drive side	30 in	Outward

Supply Fan

Component: 4 | Length: 36 in | Shipping Section: 1

Fan Performance

Air Volume	Static Pressure			Fan Energy Index(FEI)	Total Input Power	Fan Shaft Power	Fan Wheel Speed		Outlet Velocity
	External	Total	Cabinet				Operating	Maximum	
1400 cfm	0.60 inWc	1.83 inWc	0.00 inWc	1.18	0.8 kW	0.73 BHP	1365 rpm	2518 rpm	1333 ft/min

Fan Data

Fan Type	Blade Type / Class	Quantity of Fans	Wheel Diameter	Number of Blades	Discharge	Motor Location
Centrifugal DWDI	Forward Curved / 2	1	10.62 in	N/A	Top horizontal	To Side of Fan

Motor Data

Power	Electrical Supply	Speed	Efficiency	Enclosure	Frame Size	Supplier	Number of Poles	Lock Rotor Current	Full Load Current
2.0 HP	460/60/3 V/Hz/Phase	1750 rpm	Premium	TEFC	145 T frame	Generic	4	23.83 A	2.90 A

Fan Options

Shaft Grounding Kit:	Provided	**Isolator Type:**	Spring

Drive Package Data*

Fan Sheave	Motor Sheave	Belt	Number of Belts	Actual Drive S.F.	Bearing Type
AK46H	AK34H	A27	2	1.11	Standard - L50 (200K)

**Daikin Applied reserves the right to provide a different but equivalent drive package*

VFD/Starter/Disconnect Data

Selection Type:	External J-Box	**Vendor:**	Factory Standard
Voltage:	460 V	**Height x Width x Depth:**	6.00 in x 6.00 in x 4.00 in
Mounting:	Door Side	**Enclosure:**	NEMA 3R

Door

Location	Drive Side Door Width	Opp. Drv. Side Door Width	Opening
Both sides	20 in	28 in	Outward

Unit Sound Power (dB)

Type	63 Hz	125 Hz	250 Hz	500 Hz	1000 Hz	2000 Hz	4000 Hz	8000 Hz
Radiated:	65	68	55	51	52	42	46	51
Unit Discharge:	75	78	73	72	74	70	69	66
Unit Return:	65	68	58	58	59	55	51	51

Shipping Section Details

Section	Length in	Weight lb	Corner Weights (lb)				Center of Gravity (in)		
			P1	P2	P3	P4	XX	YY	ZZ
1	142	2313	755	359	442	839	76	17	19
Entire Unit	**142**	**2313**	**755**	**359**	**442**	**839**	**76**	**17**	**19**

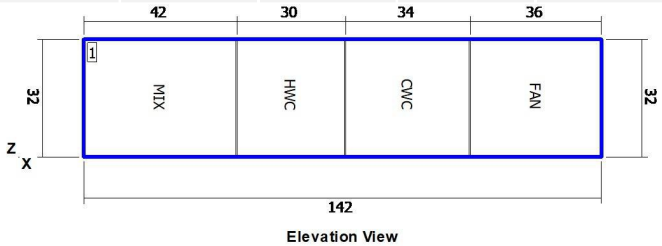

Elevation View

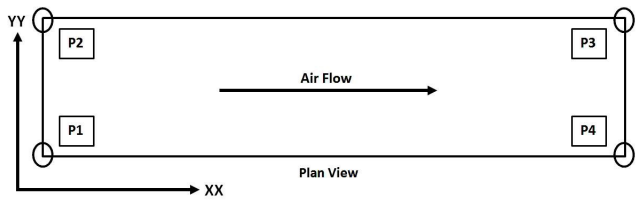

Plan View

NOTE: Piping vestibule shipping section length(s) not included in the total shipping section length.

NOTE: Piping vestibule(s) are shipped attached to the coil section(s).

NOTE: Special components aren't included in the corner weights and center of gravity data.

NOTE: Shipping weights listed do not include weight of water (listed in coil section(s) above.

Shipping Protection	None

Supply Static Pressure Drop

Component	Option	Static Pressure Drop
Mixing Box	Filter	0.52 insWg
Mixing Box	Mixing Box	0.03 insWg
Hot Water Coil	Hot Water Coil	0.05 insWg
Chilled Water coil	Chilled Water coil	0.63 insWg
Supply Fan	Cabinet	
External Static	External Static	0.60 insWg
Total Supply Fan Static		1.83 insWg

Minimum Recommended Drain Pan Trap Dimensions

Shipping Section	Component	H
1	Chilled Water coil	2.96

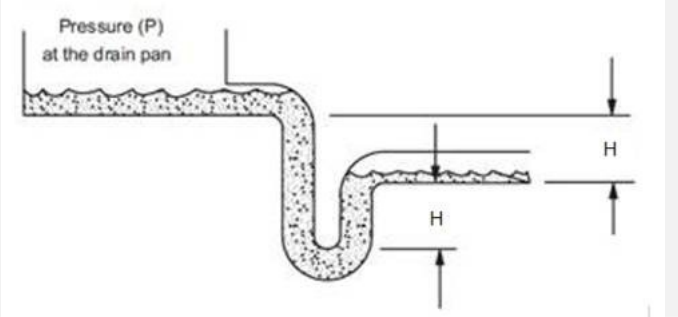

Dimensions provided as a courtesy and are recommended minimums only. Daikin is not responsible for supplying or designing drain pan traps and is not responsible for any damage caused by incorrect trap heights. The dimensions listed above should be reviewed and approved by a licensed plumbing professional.

This calculation is based on an assumption that 0.25 inches of the external static pressure is in the return duct and the remainder is in the supply duct. If actual conditions vary from this assumption then contact Applications for new trap height recommendations.

AHRI Certification

Certified by the AHRI Central Station Air-Handling Unit (AHU) Certification Program, which is based on AHRI Standard 430/431. AHRI certified units are subject to rigorous and continuous testing, have performance ratings independently measured and are third-party verified. Certified units may be found in the AHRI Directory at www.ahridirectory.org.

Notes

Standard
1. As a standalone component, unit meets or exceeds requirements of ASHRAE 90.1 - 2007. The approving authority is responsible for compliance of multi - component building systems.

BQZQ3P

Klein ISD Eiland ES AHU re

8

1/16/2026

OAHU-1 (Eiland)

Drawing

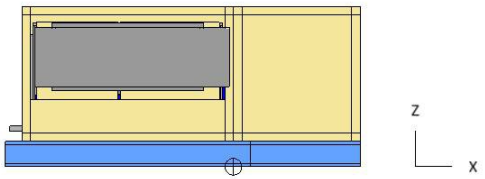



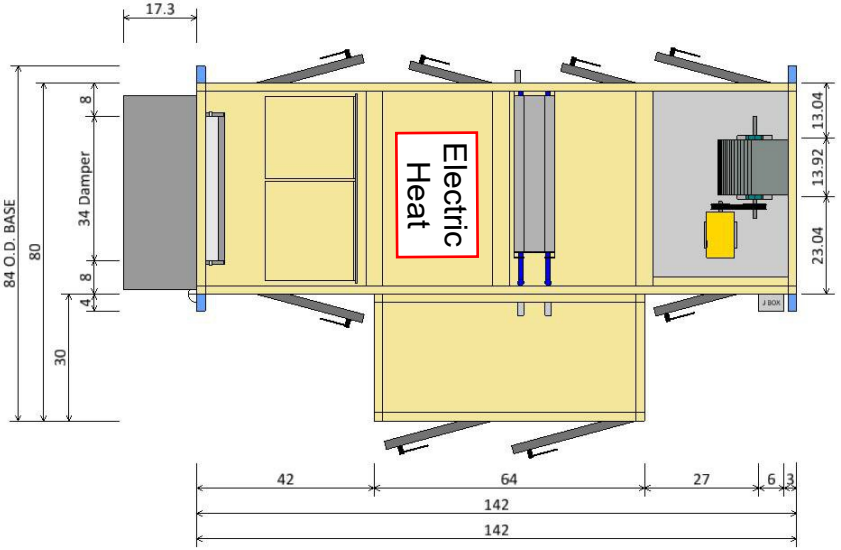

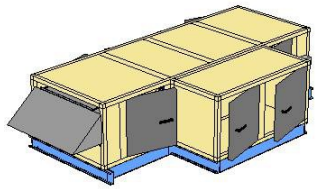

FRONT END VIEW

PLAN VIEW

ISOMETRIC VIEW

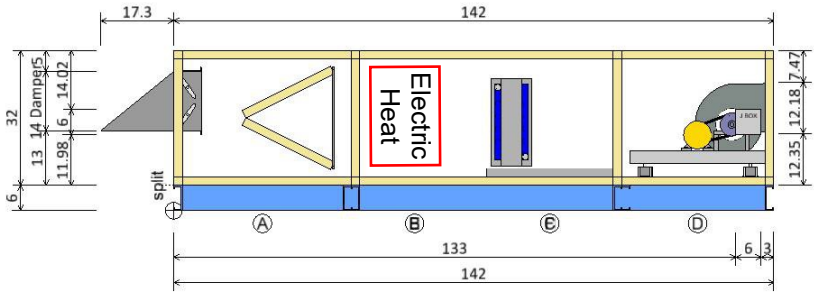

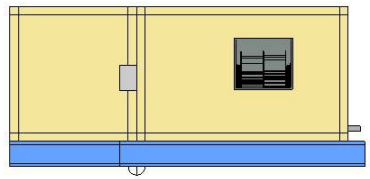

ELEVATION VIEW

REAR END VIEW

Plan/Elevation	Unit Tag: OAHU-1 (Eiland)			Sales Office: HTS Texas		
Product: Skyline Air Handler	Project Name: Klein ISD Eiland ES AHU replacements			Sales Engineer:		
Model: OAH006GDAM	Jan. 16, 2026	Ver/Rev:	Sheet: 1 of 1	Scale: NTS	Tolerance: +/-0.25"	Dwg Units: in

DAIKIN

13600 Industrial Park Blvd, Minneapolis, MN 55441

www.DaikinApplied.com Software Version: 13.91

All opening dimensions have a 1" mounting flange along the inner edge. The actual airflow area of the opening is 2" smaller in each dimension.

BQZQ3P

Klein ISD Eiland ES AHU re

9

1/16/2026

OAHU-1 (Eiland)

Drawing

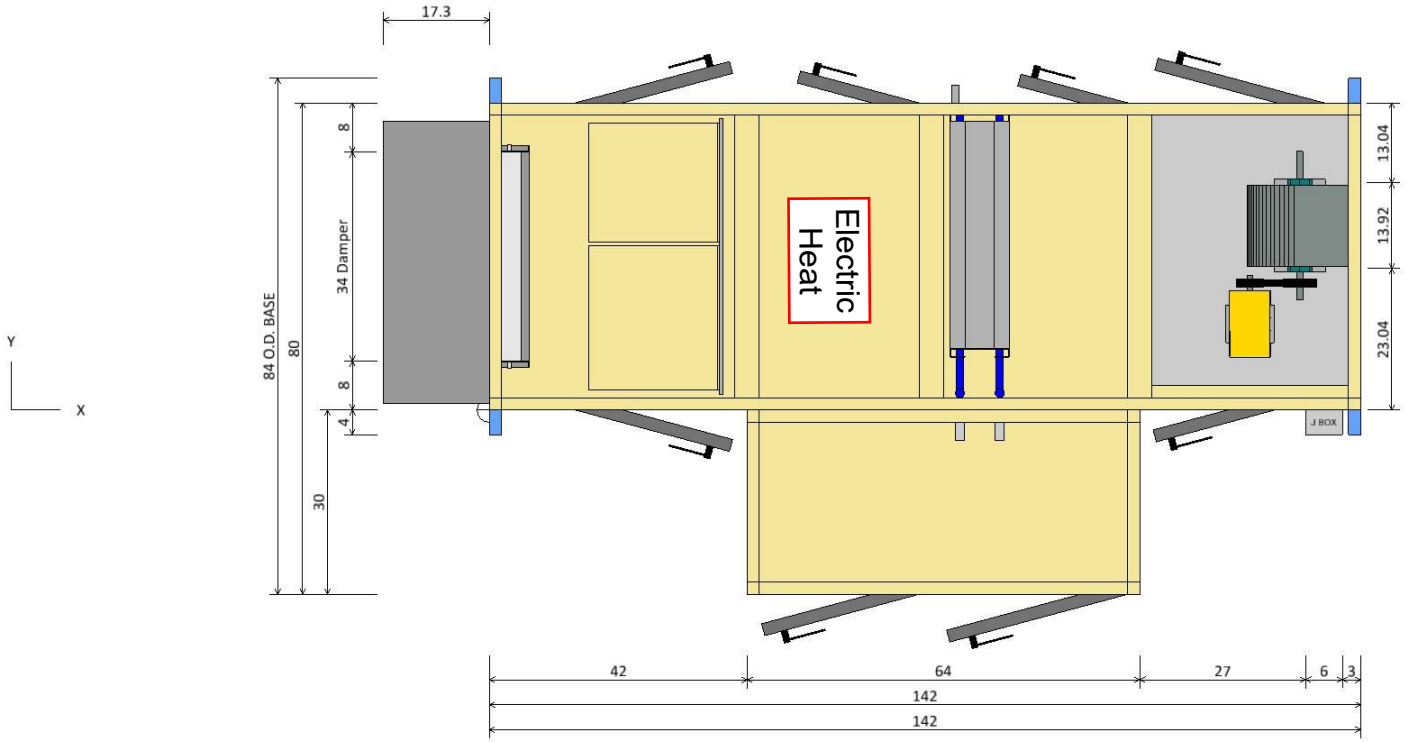

PLAN VIEW

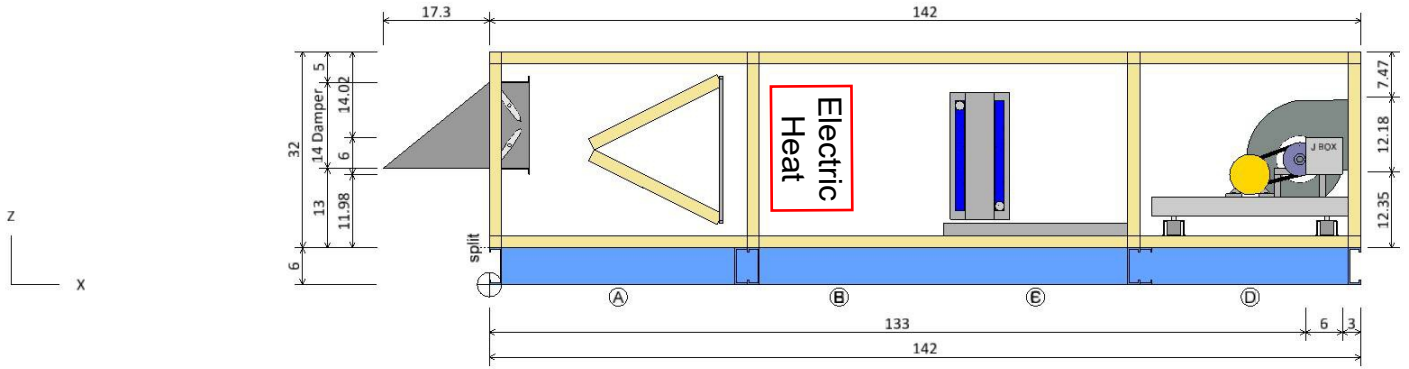

ELEVATION VIEW

Component Key		
Ⓐ	Mixing Box	
	Filter Type:	Pre Pleat M13
	Right Door (WxH):	26 ins x 28 ins
	Left Door (WxH):	26 ins x 28 ins
Ⓑ	Hot Water Coil	
	Coil Model:	5WH0001C
	Total Capacity:	0.0 Btu/hr
	Left Door (WxH):	20 ins x 24 ins
Ⓒ	Chilled Water coil	
	Coil Model:	5WH1206C
	Total Capacity:	133777.0 Btu/hr
	Left Door (WxH):	18 ins x 22 ins
Ⓓ	Supply Fan	
	Fan Type:	Centrifugal DWDI
	Fan Size (Class):	10 (2)
	Air Flowrate:	1400.0 cfm
	T.S.P:	1.8 insWg
	Motor Power:	2.0 HP
	Right Door (WxH):	20 ins x 28 ins
	Left Door (WxH):	28 ins x 28 ins
Ⓔ	Vestibule Section	
	Right Door (WxH):	26 ins x 28 ins
Ⓕ	Vestibule Section	
	Right Door (WxH):	30 ins x 28 ins

Opening dimensions shown are for unit only, refer to curb drawing for duct opening dimensions.

Roof panels add 2 inches to total unit height.

Plan/Elevation - No Ends	Unit Tag: OAHU-1 (Eiland)			Sales Office: HTS Texas		
Product: Skyline Air Handler	Project Name: Klein ISD Eiland ES AHU replacements			Sales Engineer:		
Model: OAH006GDAM	Jan. 16, 2026	Ver/Rev:	Sheet: 1 of 1	Scale: NTS	Tolerance: +/-0.25"	Dwg Units: in

DAIKIN
13600 Industrial Park Blvd, Minneapolis, MN 55441
www.DaikinApplied.com Software Version: 13.91

All opening dimensions have a 1" mounting flange along the inner edge. The actual airflow area of the opening is 2" smaller in each dimension.

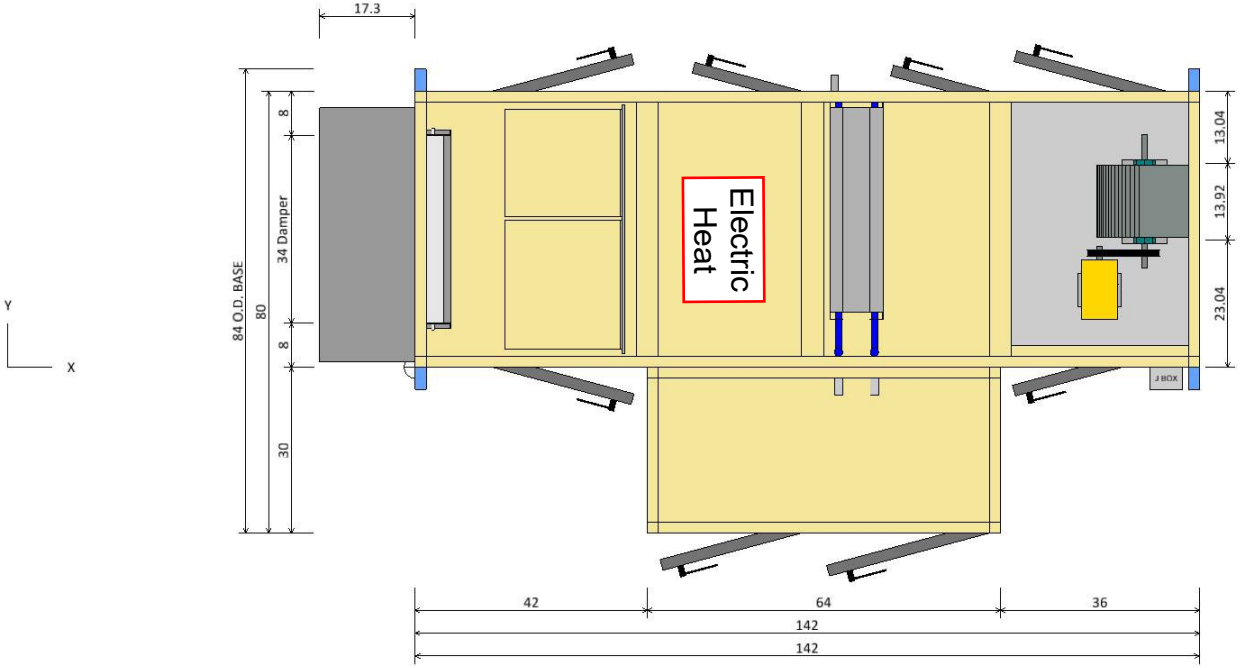

PLAN VIEW

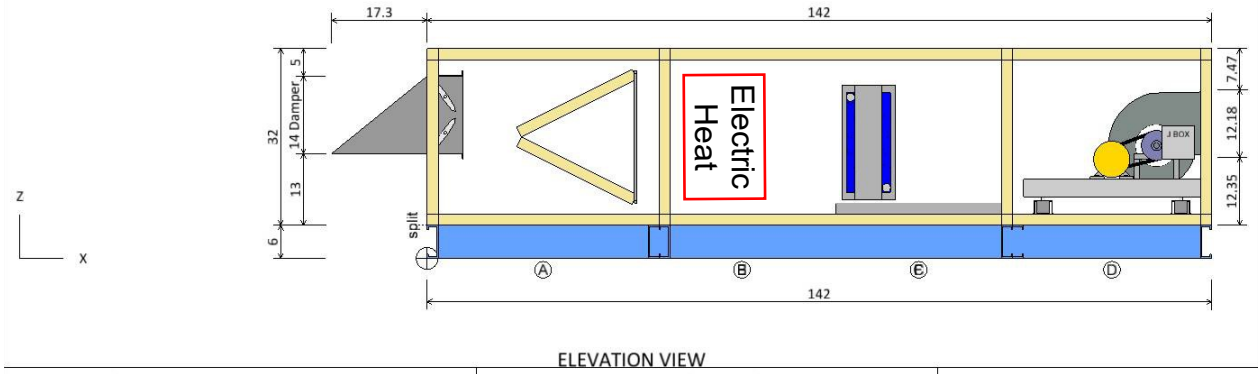

ELEVATION VIEW

Component Key

	Type	X	Y	Z	Wid	Hgt
Ⓐ	Mixing Box Outside air damper	0.00	2.00	16.00	46.00	20.00
Ⓓ	Supply Fan Fan Discharge	142.00	23.04	18.35	13.92	12.18

Opening dimensions shown are for unit only, refer to curb drawing for duct opening dimensions.

Roof panels add 2 inches to total unit height.

Note: Dimensions are measured from the origin point.
Note: Openings with or without dampers are recessed into the unit by approximately 1.75 in.

Opening/Damper Connections	Unit Tag: OAHU-1 (Eiland)			Sales Office: HTS Texas		
Product: Skyline Air Handler	Project Name: Klein ISD Eiland ES AHU replacements			Sales Engineer:		
Model: OAH006GDAM	Jan. 16, 2026	Ver/Rev:	Sheet: 1 of 1	Scale: NTS	Tolerance: +/-0.25"	Dwg Units: in

DAIKIN
13600 Industrial Park Blvd, Minneapolis, MN 55441
www.DaikinApplied.com Software Version: 13.91

All opening dimensions have a 1" mounting flange along the inner edge. The actual airflow area of the opening is 2" smaller in each dimension.

BQZQ3P

Klein ISD Eiland ES AHU re

11

1/16/2026

OAHU-1 (Eiland)

Drawing

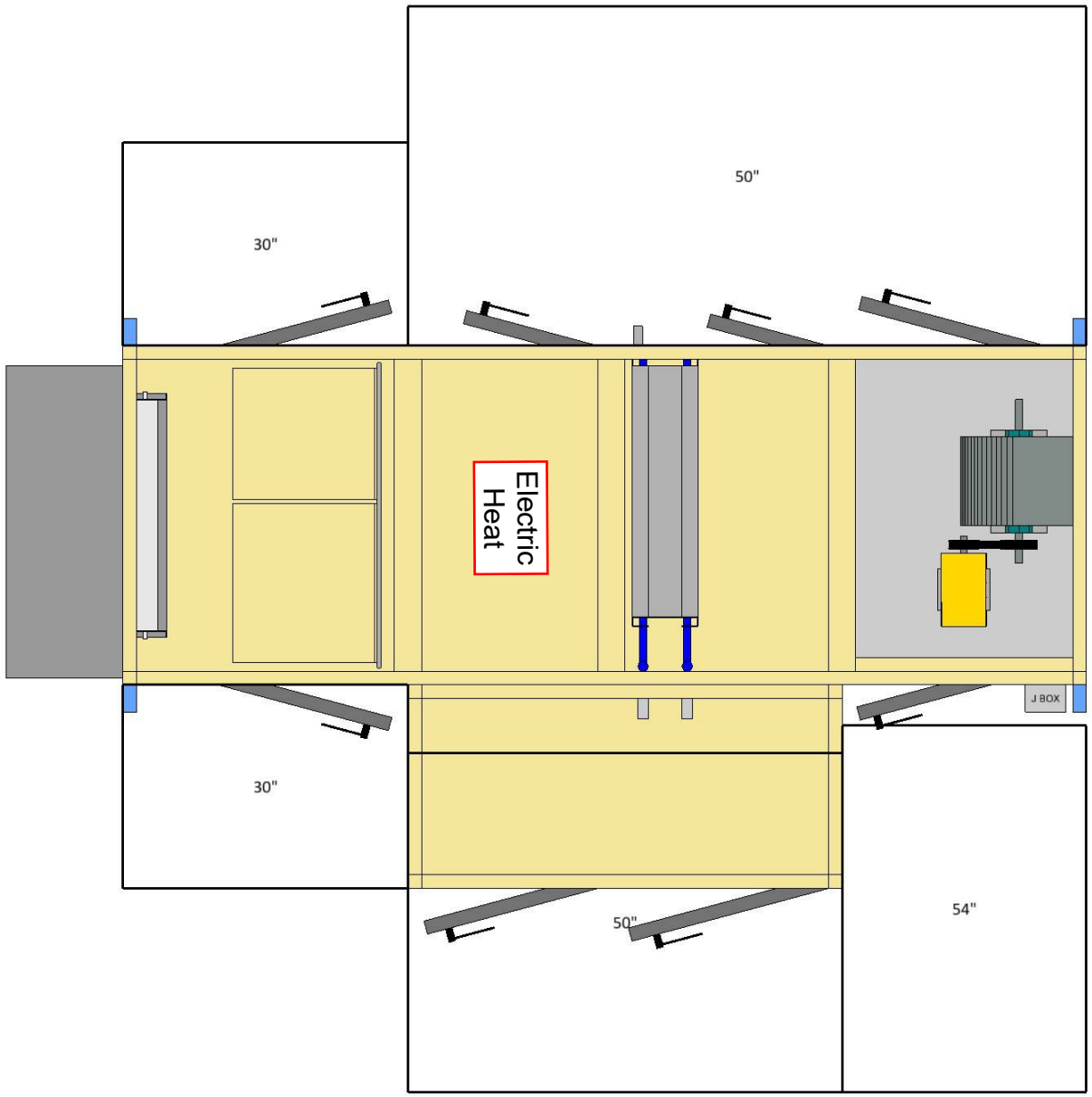

PLAN VIEW

Notes

Check local electrical component service clearance codes for specific distances.

Access is only required on one side of the unit.

Service Clearance View	Unit Tag: OAHU-1 (Eiland)			Sales Office: HTS Texas		
Product: Skyline Air Handler	Project Name: Klein ISD Eiland ES AHU replacements			Sales Engineer:		
Model: OAH006GDAM	Jan. 16, 2026	Ver/Rev:	Sheet: 1 of 1	Scale: NTS	Tolerance: +/-0.25"	Dwg Units: in

DAIKIN
13600 Industrial Park Blvd, Minneapolis, MN 55441
www.DaikinApplied.com Software Version: 13.91

All opening dimensions have a 1" mounting flange along the inner edge. The actual airflow area of the opening is 2" smaller in each dimension.

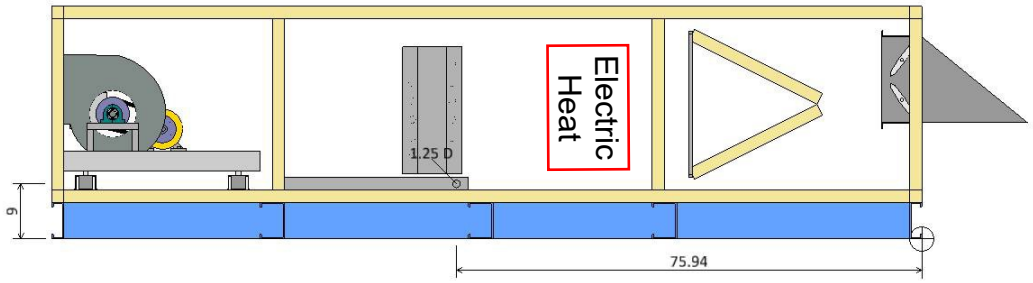

LEFT ELEVATION VIEW

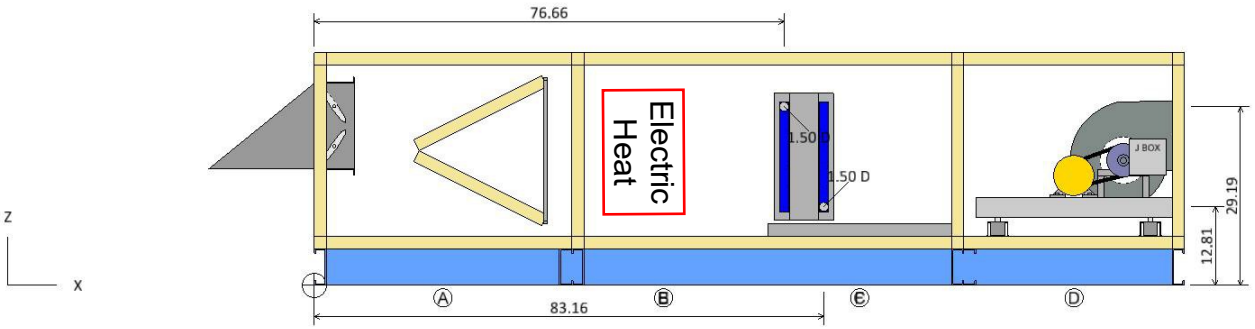

RIGHT ELEVATION VIEW

Coil and Drain Connections

	Type	X	Y	Z	Diam
Ⓒ	Chilled Water coil Condensate drain conn:	75.94	52.90	9.00	1.25
	Cold water inlet:	83.16	-7.00*	12.81	1.50
	Cold water outlet:	76.66	-7.00*	29.19	1.50

Roof panels add 2 inches to total unit height.

Notes:
Dimensions are measured from the origin point.
* value varies +/- 1 in.

Coil and Drain Connections	Unit Tag: OAHU-1 (Eiland)			Sales Office: HTS Texas		
Product: Skyline Air Handler	Project Name: Klein ISD Eiland ES AHU replacements			Sales Engineer:		
Model: OAH006GDAM	Jan. 16, 2026	Ver/Rev:	Sheet: 1 of 1	Scale: NTS	Tolerance: +/-0.25"	Dwg Units: in

DAIKIN
13600 Industrial Park Blvd, Minneapolis, MN 55441
www.DaikinApplied.com Software Version: 13.91

All opening dimensions have a 1" mounting flange along the inner edge. The actual airflow area of the opening is 2" smaller in each dimension.

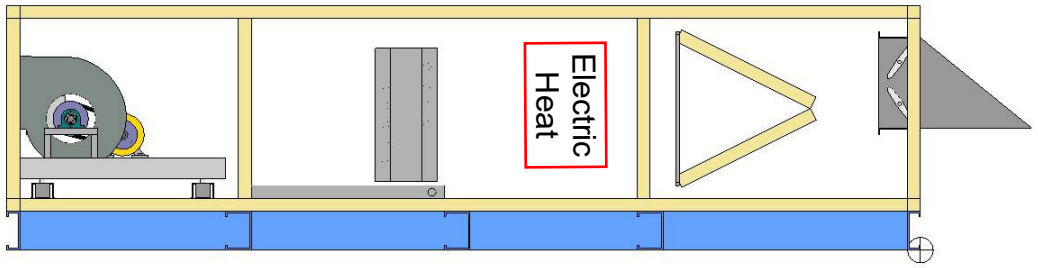

LEFT ELEVATION VIEW

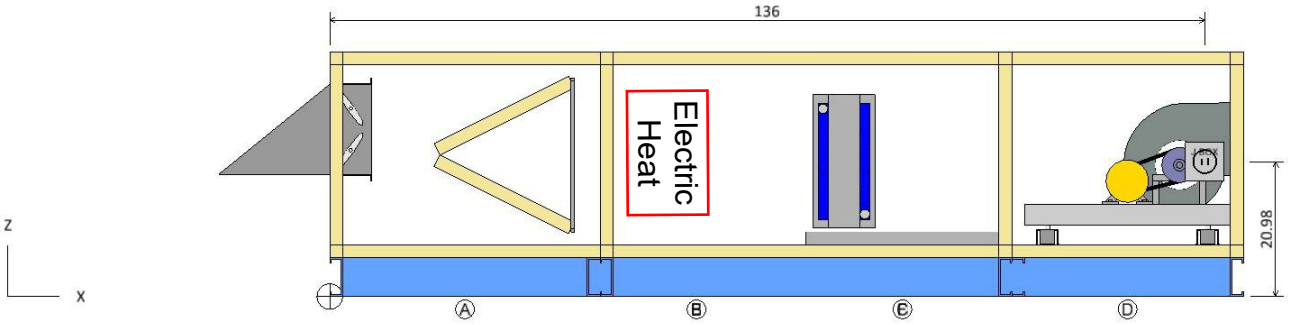

RIGHT ELEVATION VIEW

Component Key

	Type	X	Y	Z	Volts	Phase
Ⓓ	Supply Fan Fan	136.00	0.00	20.98	460	3

Roof panels add 2 inches to total unit height.

Note: Dimensions are measured from the origin point.

Electrical Connections	Unit Tag: OAHU-1 (Eiland)			Sales Office: HTS Texas		
Product: Skyline Air Handler	Project Name: Klein ISD Eiland ES AHU replacements			Sales Engineer:		
Model: OAH006GDAM	Jan. 16, 2026	Ver/Rev:	Sheet: 1 of 1	Scale: NTS	Tolerance: +/-0.25"	Dwg Units: in

DAIKIN
13600 Industrial Park Blvd, Minneapolis, MN 55441
www.DaikinApplied.com Software Version: 13.91

All opening dimensions have a 1" mounting flange along the inner edge. The actual airflow area of the opening is 2" smaller in each dimension.

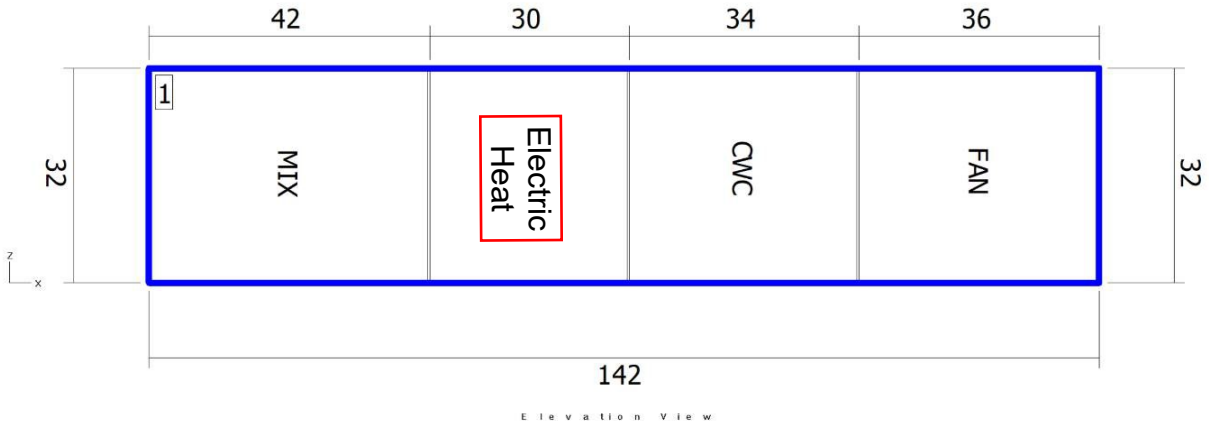

Elevation View

Shipping Sections

Section	Weight (lb)	X	Y	Z
Section 1	2312.50	142	50	32
Total Unit	2312.50	142	80	32

Note: Base rails, curb ready base, coil connectors, drain connectors, and control boxes not included in height X, Y, Z dimensions.
Shipping section may be 2" longer in air flow direction due to internal splice joint.

Shipping Sections	Unit Tag: OAHU-1 (Eiland)			Sales Office: HTS Texas		
Product: Skyline Air Handler	Project Name: Klein ISD Eiland ES AHU replacements			Sales Engineer:		
Model: OAH006GDAM	Jan. 16, 2026	Ver/Rev:	Sheet: 1 of 1	Scale: NTS	Tolerance: +/-0.25"	Dwg Units: in

DAIKIN
13600 Industrial Park Blvd, Minneapolis, MN 55441
www.DaikinApplied.com Software Version: 13.91

All opening dimensions have a 1" mounting flange along the inner edge. The actual airflow area of the opening is 2" smaller in each dimension.

Product Drawing	Unit Tag: OAHU-1 (Eiland)			Sales Office: HTS Texas			DAIKIN
Product: Skyline Air Handler	Project Name: Klein ISD Eiland ES AHU replacements			Sales Engineer:			13600 Industrial Park Blvd, Minneapolis, MN 55441
Model: OAH006GDAM	Jan. 16, 2026	Ver/Rev:	Sheet: 1 of 1	Scale: NTS	Tolerance: +/-0.25"	Dwg Units: in	www.DaikinApplied.com Software Version: 13.91

All opening dimensions have a 1" mounting flange along the inner edge. The actual airflow area of the opening is 2" smaller in each dimension.

Daikin AHU Fan Curve

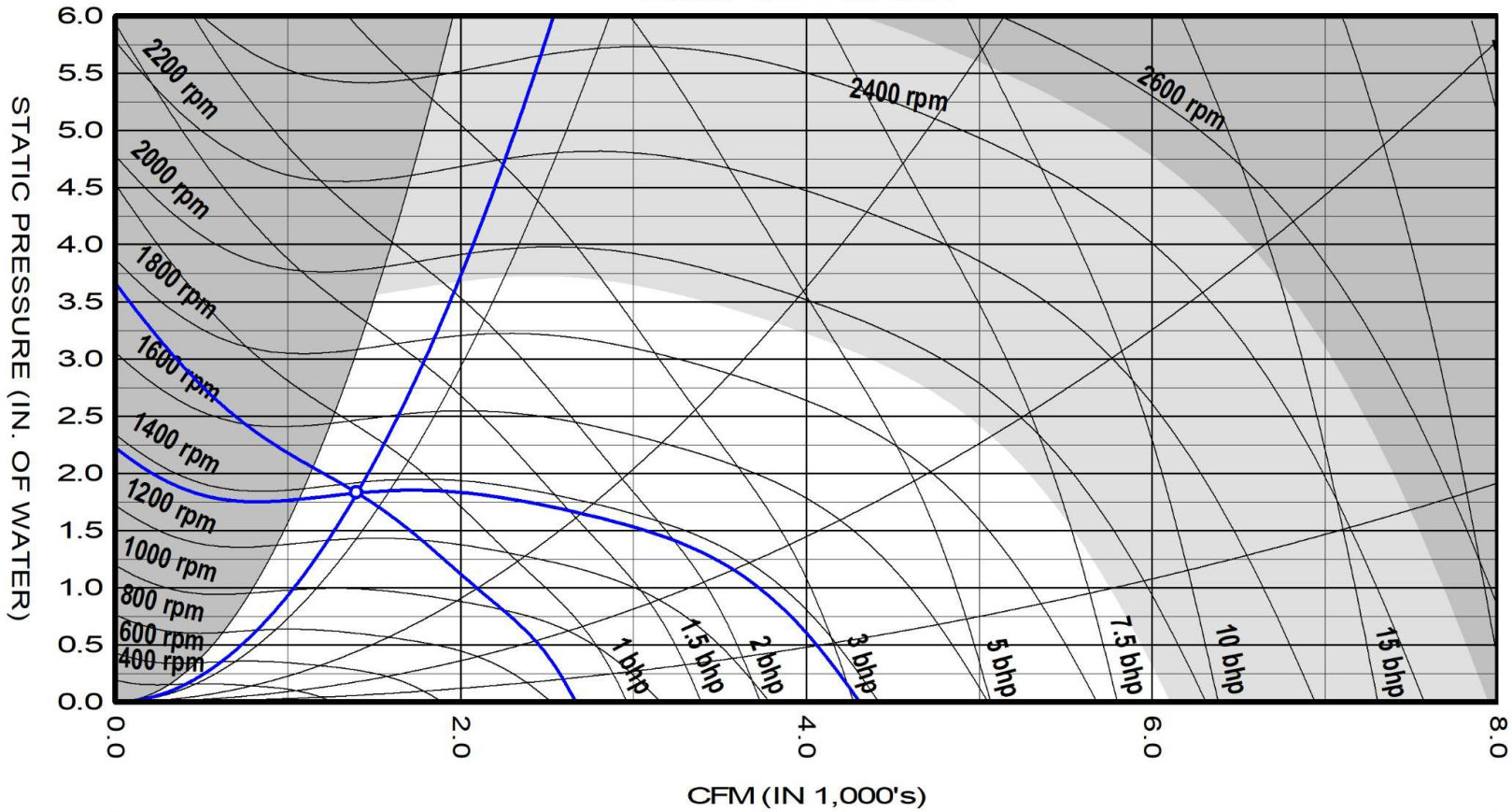

10.62" Forward Curved Supply Fan at Standard Conditions					
Air volume	1400	cfm	Fan speed	1365	rpm
Total static	1.83	insWg	Max speed	2518	rpm
Fan Shaft Power	0.7	bhp	Efficiency	55.3	%
Fan Energy Index(FEI)	1.18				

Unit tagging	OAHU-1 (Eiland)	Date	January-16-2026
Job name	Klein ISD Eiland ES AHU replacements	Time	19:00

AHRI CERTIFIED

Supply fan performance is certified in accordance with the Central Station Air-Handling Unit Certification Program, which is based on AHRI Standard 430.

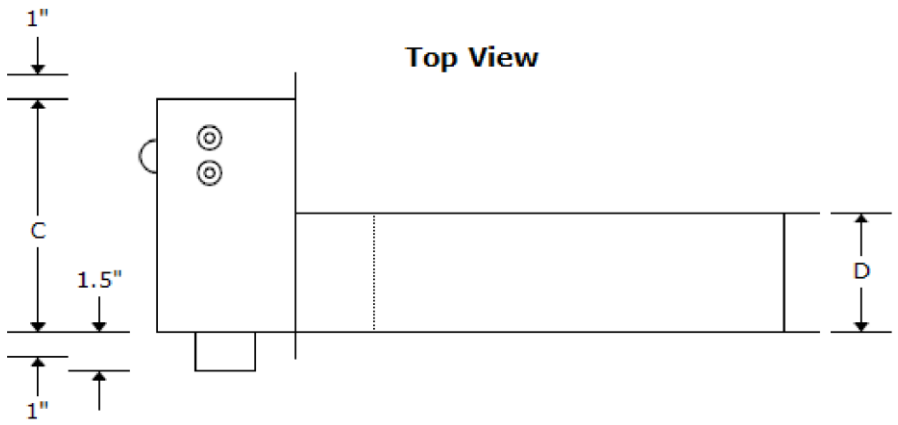

Notes

Nema 1

Horizontal Flow

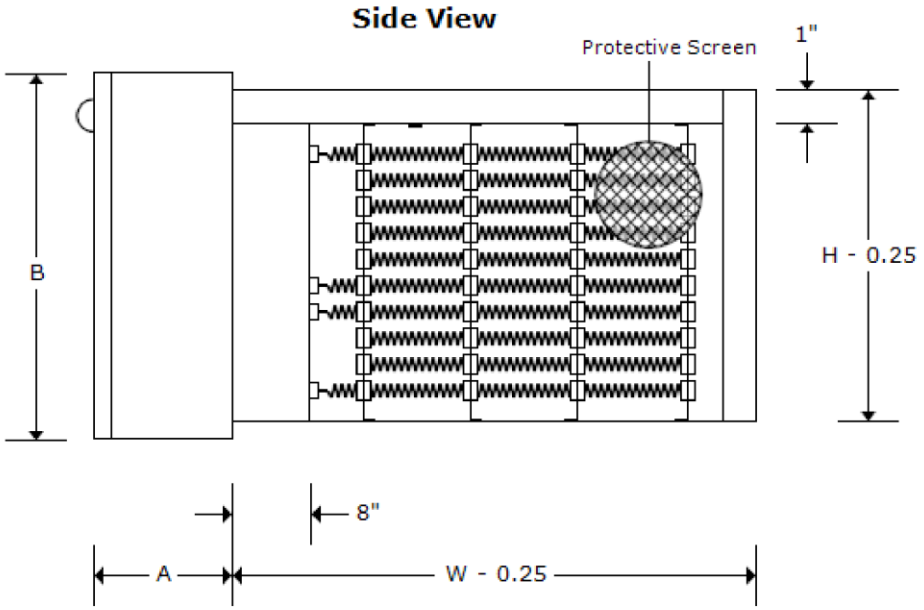

Neptronic 400 Lebeau, Montreal (QC) H4N 1R6 Tel:(514)333-1433

Proprietary Information: This document contains proprietary information and is property of Neptronic. This document and the information it contains shall not be duplicated or used in whole or in part without express written consent of Neptronic.

Mechanical Drawing
M253370024-A

Project #: 253370024
Nom Projet: Klein ISD Eiland ES - 2025 FRP
Customer Name:

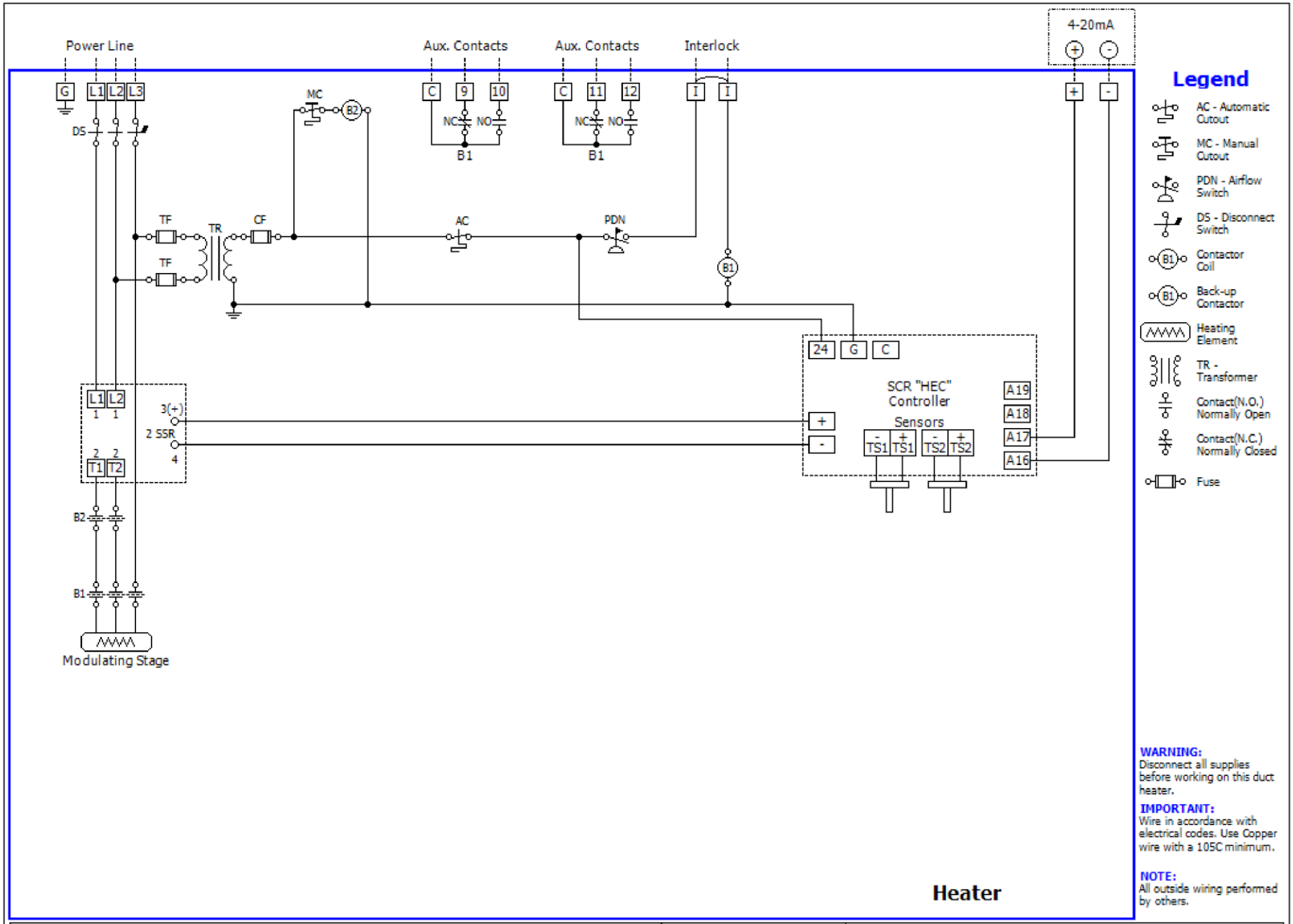

Neptronic 400 Lebeau, Montreal (QC) H4N 1R6 Tel:(514)333-1433

Proprietary Information: this document contains proprietary information & is property of Neptronic. This Document and the information it contains shall not be duplicated or used in whole or in part without the express consent of Neptronic.

ELECTRICAL DRAWING

E253370024-A

Project Number: 253370024
Project Name: Klein ISD Eiland ES - 2025 FRP
Customer Name:

Job Information	Technical Data Sheet
Job Name	Klein ISD Eiland ES AHU replacements
Date	January 16 2026
Submitted By	Salas O'Brien
Software Version	13.91
Unit Tag	OAHU-2 (Eiland)

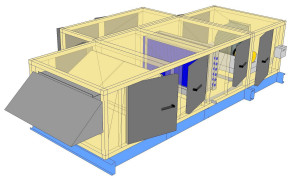

Unit Overview

Model Number	Supply					
	Air Volume cfm	Static Pressure		External Dimensions		
		External inWc	Total inWc	Height in	Width in	Length in
OAH007GDAM	2000	0.60	1.85	32*	52*	146

**Not including base rails, coil connectors, drain connectors, vestibule sections, control boxes and hoods.*

Unit

Model Number:	OAH007GDAM		
Approval:	ETL Listed / ETL Listed to Canadian Safety Standards (ETL Label / ETLc Label)		
Outer Panel:	Painted 18 gauge G60 Galvanized Steel (3000 hr. Salt Spray ASTM B-117)		
Liner:	24 gauge Galvanized Steel (unless noted per section)		
Insulation:	R-13 Injected Foam		
Unit Configuration:	Inline horizontal	**Drive (Handling) Location:**	Right
Base:	Curb ready	**Wall Thickness:**	2 in
Roof Curb Kit:	None	**Altitude:**	0 ft
Parts Warranty:	Additional One Year, Two Year Total		

Mixing Box

Component: 1 | Length: 42 in | Shipping Section: 1

Portion	Damper					Blade Action	Rated CFM	Air Pressure Drop	Quantity	Hoods
	Size (Width x Height)		Location	Type	Actuation					
	Overall	Opening								
Outside Air	48 in x 20 in	36 in x 14 in	End	Ruskin CD60	NA	Opposed	2000 cfm	0.05 insWg	1	Fitted - Factory installed
Return Air	No opening	No opening		None		None	2000 cfm		0	

Filter Data

Type	Efficiency	Nominal Face Velocity	Actual Face Velocity	Actual Face Area	Air Volume	Filter Loading
Pre Pleat	MERV 13	125 ft/min	132 ft/min	15.2 ft²	2000 cfm	Side

Air Pressure Drop				Number of Filters	Height	Width	Depth
Clean Air	Mean Air	Dirty Air	User Spec				
0.06 inWc	**0.53** inWc	1.00 inWc	N/A	4	24 in	24 in	2 in

Door

Location	Drive Side Door Width	Opp. Drv. Side Door Width	Opening
Both sides	26 in	26 in	Outward

Electric Heater	Component: 2	Length: 34 in	Shipping Section: 1

Voltage	Control Type	Temperature Control	Control Signal	Pressure Drop	kW	FLA	Steps	Disconnect		Free Air Velocity ft/min
480	SCR	Yes	4 - 20mA	0.07	25	31.38	N/A	Yes		303

Notes

This component section includes equipment that is a potential source of ignition in conjunction with A2L refrigerants. Refer to relevant IOM's regarding proper interlock with required refrigeration detection systems.

Special Options

Sound Baffle

(As casing details)

Chilled Water Coil	Component: 3	Length: 38 in	Shipping Section: 1

Coil Model	Total Capacity	Sensible Capacity	Number of Coils	Number of Rows	Fins per Inch	Tube Diameter	Tube Spacing (Face x Row)
5WL1108B	189386 Btu/hr	100419 Btu/hr	1	8	11	0.625 in	1.50 in X 1.299 in

Coil Operating Weight	Coil Dry Weight
227 lb	171 lb

Air Volume	Air Temperature				Coil Air Pressure Drop	Finned Height	Finned Length	Face Area	Face Velocity
	Entering		Leaving						
	Dry Bulb	Wet Bulb	Dry Bulb	Wet Bulb					
2000 cfm	98.0 °F	79.0 °F	52.1 °F	51.9 °F	0.62 inWc	21 in	39 in	5.69 ft²	352 ft/min

Water

Entering	Leaving	Flow Rate	Pressure Drop	Velocity	Fluid Volume	Fluid Weight	Piping Vestibule
45.0 °F	56.1 °F	34.00 gpm	6.80 ftHd	3.50 ft/s	6.0 gal	56.00 lb	30 in

Connection [Data Per Coil]				Min. Fin Surface Temp.	Min. Tube Wall Surface Temp.	Fouling Factor
Type	Size	Location	Material			
Threaded	2.00 in	Opp drive side	Carbon steel	45.0 °F	45.0 °F	0.000

Material				Drain Pan	Drain Side
Fin	Tube	Header	Case		
Aluminum .0075 in	Copper .020 in	Copper	Stainless steel	Stainless steel	Drive side

AHRI 410 Certification

Certified in accordance with the AHRI Forced-Circulation Air-Cooling and Air-Heating Coils Certification Program which is based on AHRI Standard 410 within the Range of Standard Rating Conditions listed in Table 1 of the Standard. Certified units may be found in the AHRI Directory at www.ahridirectory.org

Door

Location	Width	Opening
Drive side	18 in	Outward

Door

Location	Width	Opening
Non-drive side	30 in	Outward

Supply Fan

Component: 4 | Length: 36 in | Shipping Section: 2

Fan Performance

Air Volume	Static Pressure			Fan Energy Index(FEI)	Total Input Power	Fan Shaft Power	Fan Wheel Speed		Outlet Velocity
	External	Total	Cabinet				Operating	Maximum	
2000 cfm	0.60 inWc	1.85 inWc	0.00 inWc	1.13	1.1 kW	1.07 BHP	1370 rpm	2518 rpm	1905 ft/min

Fan Data

Fan Type	Blade Type / Class	Quantity of Fans	Wheel Diameter	Number of Blades	Discharge	Motor Location
Centrifugal DWDI	Forward Curved / 2	1	10.62 in	N/A	Top horizontal	To Side of Fan

Motor Data

Power	Electrical Supply	Speed	Efficiency	Enclosure	Frame Size	Supplier	Number of Poles	Lock Rotor Current	Full Load Current
2.0 HP	460/60/3 V/Hz/Phase	1750 rpm	Premium	TEFC	145 T frame	Generic	4	23.83 A	2.90 A

Fan Options

Shaft Grounding Kit:	Provided	**Isolator Type:**	Spring

Drive Package Data*

Fan Sheave	Motor Sheave	Belt	Number of Belts	Actual Drive S.F.	Bearing Type
AK46H	AK34H	A27	2	1.11	Standard - L50 (200K)

**Daikin Applied reserves the right to provide a different but equivalent drive package*

VFD/Starter/Disconnect Data

Selection Type:	External J-Box	**Vendor:**	Factory Standard
Voltage:	460 V	**Height x Width x Depth:**	6.00 in x 6.00 in x 4.00 in
Mounting:	Door Side	**Enclosure:**	NEMA 3R

Door

Location	Drive Side Door Width	Opp. Drv. Side Door Width	Opening
Both sides	20 in	28 in	Outward

Unit Sound Power (dB)

Type	63 Hz	125 Hz	250 Hz	500 Hz	1000 Hz	2000 Hz	4000 Hz	8000 Hz
Radiated:	66	69	56	52	53	43	46	51
Unit Discharge:	76	79	74	73	75	71	70	67
Unit Return:	66	69	56	56	58	54	50	51

Shipping Section Details

Section	Length in	Weight lb	Corner Weights (lb)				Center of Gravity (in)		
			P1	P2	P3	P4	XX	YY	ZZ
1	110	1898	232	618	760	373	63	36	19
2	36	593	160	128	137	169	19	23	18
Entire Unit	**146**	**2491**	**423**	**777**	**865**	**511**	**78**	**33**	**19**

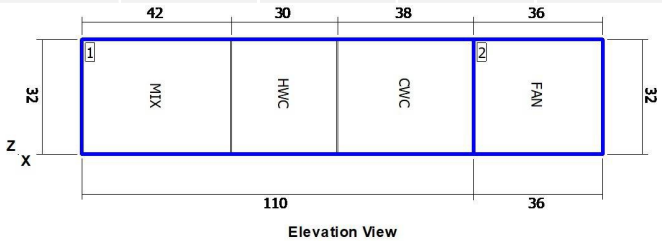

Elevation View

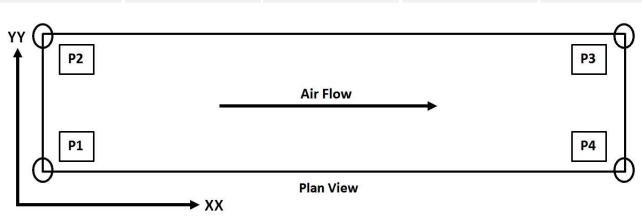

Plan View

NOTE: Piping vestibule shipping section length(s) not included in the total shipping section length.

NOTE: Piping vestibule(s) are shipped attached to the coil section(s).

NOTE: Special components aren't included in the corner weights and center of gravity data.

NOTE: Shipping weights listed do not include weight of water (listed in coil section(s) above.

Shipping Protection	None

Supply Static Pressure Drop

Component	Option	Static Pressure Drop
Mixing Box	Filter	0.53 insWg
Mixing Box	Mixing Box	0.05 insWg
Hot Water Coil	Hot Water Coil	0.05 insWg
Chilled Water coil	Chilled Water coil	0.62 insWg
Supply Fan	Cabinet	
External Static	External Static	0.60 insWg
Total Supply Fan Static		1.85 insWg

Minimum Recommended Drain Pan Trap Dimensions

Shipping Section	Component	H
1	Chilled Water coil	3.00

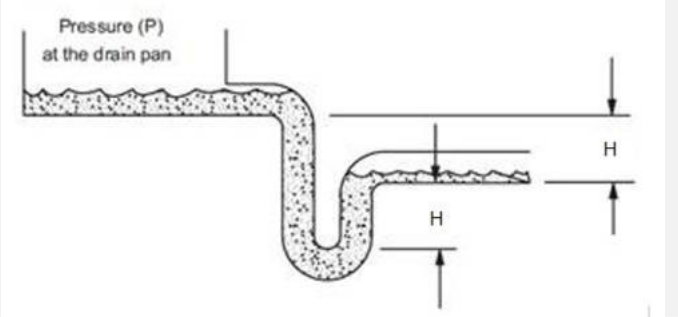

Dimensions provided as a courtesy and are recommended minimums only. Daikin is not responsible for supplying or designing drain pan traps and is not responsible for any damage caused by incorrect trap heights. The dimensions listed above should be reviewed and approved by a licensed plumbing professional.

This calculation is based on an assumption that 0.25 inches of the external static pressure is in the return duct and the remainder is in the supply duct. If actual conditions vary from this assumption then contact Applications for new trap height recommendations.

AHRI Certification

Certified by the AHRI Central Station Air-Handling Unit (AHU) Certification Program, which is based on AHRI Standard 430/431. AHRI certified units are subject to rigorous and continuous testing, have performance ratings independently measured and are third-party verified. Certified units may be found in the AHRI Directory at www.ahridirectory.org.

Notes

Standard
1. As a standalone component, unit meets or exceeds requirements of ASHRAE 90.1 - 2007. The approving authority is responsible for compliance of multi - component building systems.

BQZQ3P

Klein ISD Eiland ES AHU re

8

1/16/2026

OAHU-2 (Eiland)

Drawing

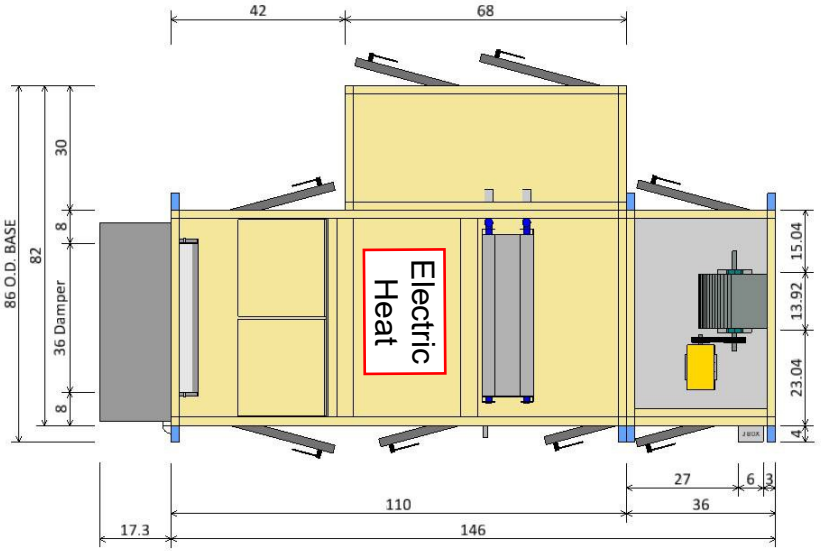

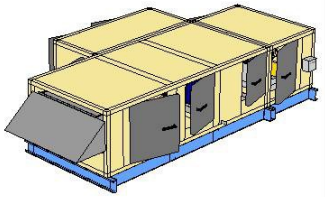

PLAN VIEW

ISOMETRIC VIEW

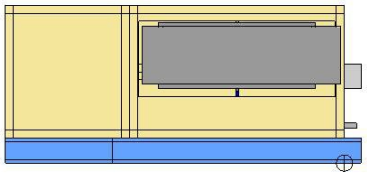

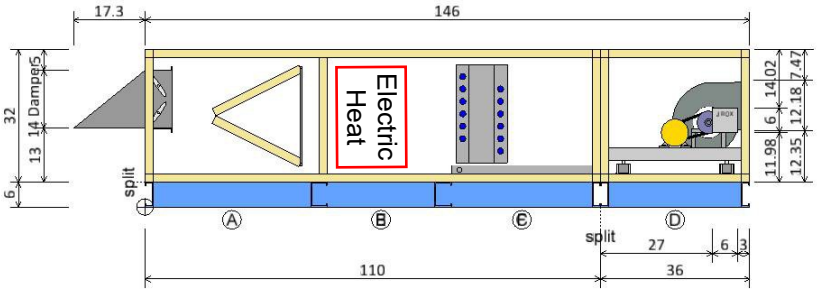

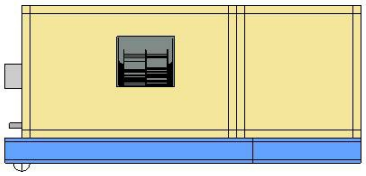

FRONT END VIEW

ELEVATION VIEW

REAR END VIEW

Plan/Elevation	Unit Tag: OAHU-2 (Eiland)			Sales Office: HTS Texas		
Product: Skyline Air Handler	Project Name: Klein ISD Eiland ES AHU replacements			Sales Engineer:		
Model: OAH007GDAM	Jan. 16, 2026	Ver/Rev:	Sheet: 1 of 1	Scale: NTS	Tolerance: +/-0.25"	Dwg Units: in

DAIKIN

13600 Industrial Park Blvd, Minneapolis, MN 55441

www.DaikinApplied.com Software Version: 13.91

All opening dimensions have a 1" mounting flange along the inner edge. The actual airflow area of the opening is 2" smaller in each dimension.

BQZQ3P

Klein ISD Eiland ES AHU re

9

1/16/2026

OAHU-2 (Eiland)

Drawing

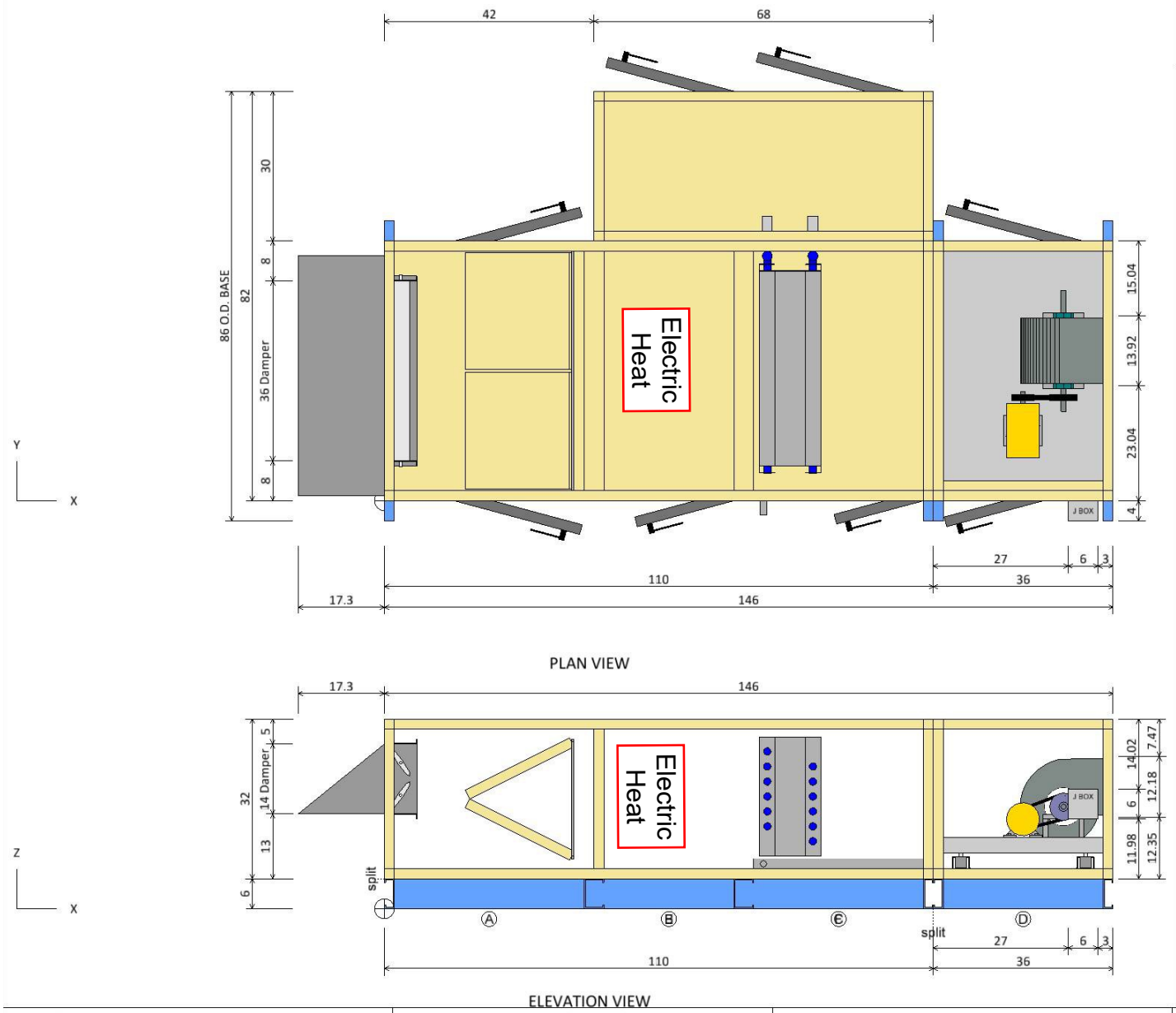

Component Key		
Ⓐ	Mixing Box	
	Filter Type:	Pre Pleat M13
	Right Door (WxH):	26 ins x 28 ins
	Left Door (WxH):	26 ins x 28 ins
Ⓑ	Hot Water Coil	
	Coil Model:	5WH0001C
	Total Capacity:	0.0 Btu/hr
	Right Door (WxH):	20 ins x 24 ins
Ⓒ	Chilled Water coil	
	Coil Model:	5WL1108B
	Total Capacity:	189386.0 Btu/hr
	Right Door (WxH):	18 ins x 22 ins
Ⓓ	Supply Fan	
	Fan Type:	Centrifugal DWDI
	Fan Size (Class):	10 (2)
	Air Flowrate:	2000.0 cfm
	T.S.P:	1.9 insWg
	Motor Power:	2.0 HP
	Right Door (WxH):	20 ins x 28 ins
	Left Door (WxH):	28 ins x 28 ins
Ⓔ	Vestibule Section	
	Left Door (WxH):	26 ins x 28 ins
Ⓕ	Vestibule Section	
	Left Door (WxH):	30 ins x 28 ins

Opening dimensions shown are for unit only, refer to curb drawing for duct opening dimensions.

Roof panels add 2 inches to total unit height.

Plan/Elevation - No Ends	Unit Tag: OAHU-2 (Eiland)			Sales Office: HTS Texas		
Product: Skyline Air Handler	Project Name: Klein ISD Eiland ES AHU replacements			Sales Engineer:		
Model: OAH007GDAM	Jan. 16, 2026	Ver/Rev:	Sheet: 1 of 1	Scale: NTS	Tolerance: +/-0.25"	Dwg Units: in

DAIKIN
13600 Industrial Park Blvd, Minneapolis, MN 55441
www.DaikinApplied.com Software Version: 13.91

All opening dimensions have a 1" mounting flange along the inner edge. The actual airflow area of the opening is 2" smaller in each dimension.

BQZQ3P

Klein ISD Eiland ES AHU re

10

1/16/2026

OAHU-2 (Eiland)

Drawing

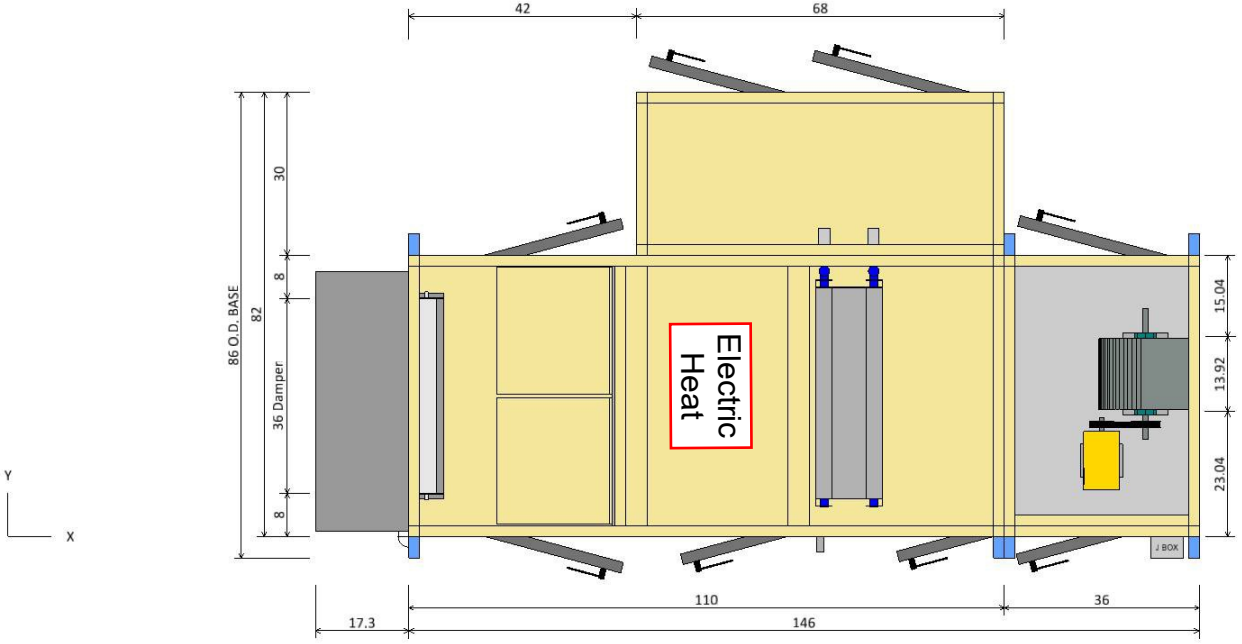

PLAN VIEW

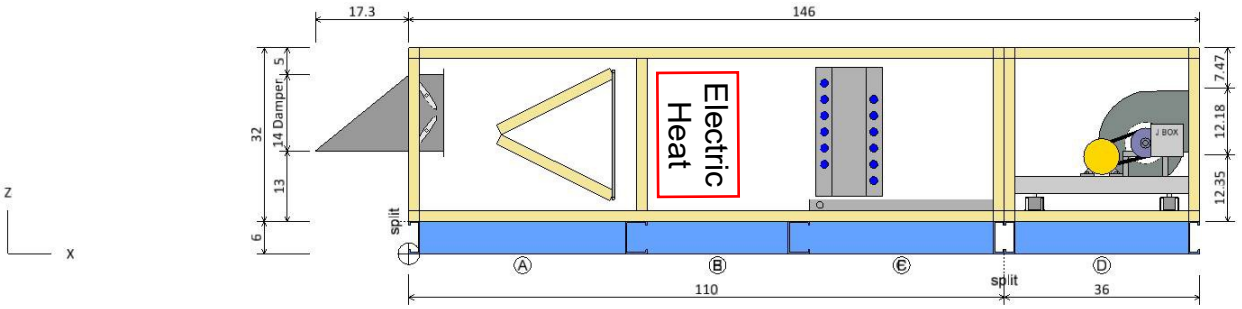

ELEVATION VIEW

Component Key

	Type	X	Y	Z	Wid	Hgt
Ⓐ	Mixing Box Outside air damper	0.00	2.00	16.00	48.00	20.00
Ⓓ	Supply Fan Fan Discharge	146.00	23.04	18.35	13.92	12.18

Opening dimensions shown are for unit only, refer to curb drawing for duct opening dimensions.

Roof panels add 2 inches to total unit height.

Note: Dimensions are measured from the origin point.
Note: Openings with or without dampers are recessed into the unit by approximately 1.75 in.

Opening/Damper Connections	Unit Tag: OAHU-2 (Eiland)			Sales Office: HTS Texas		
Product: Skyline Air Handler	Project Name: Klein ISD Eiland ES AHU replacements			Sales Engineer:		
Model: OAH007GDAM	Jan. 16, 2026	Ver/Rev:	Sheet: 1 of 1	Scale: NTS	Tolerance: +/-0.25"	Dwg Units: in

DAIKIN
13600 Industrial Park Blvd, Minneapolis, MN 55441
www.DaikinApplied.com Software Version: 13.91

All opening dimensions have a 1" mounting flange along the inner edge. The actual airflow area of the opening is 2" smaller in each dimension.

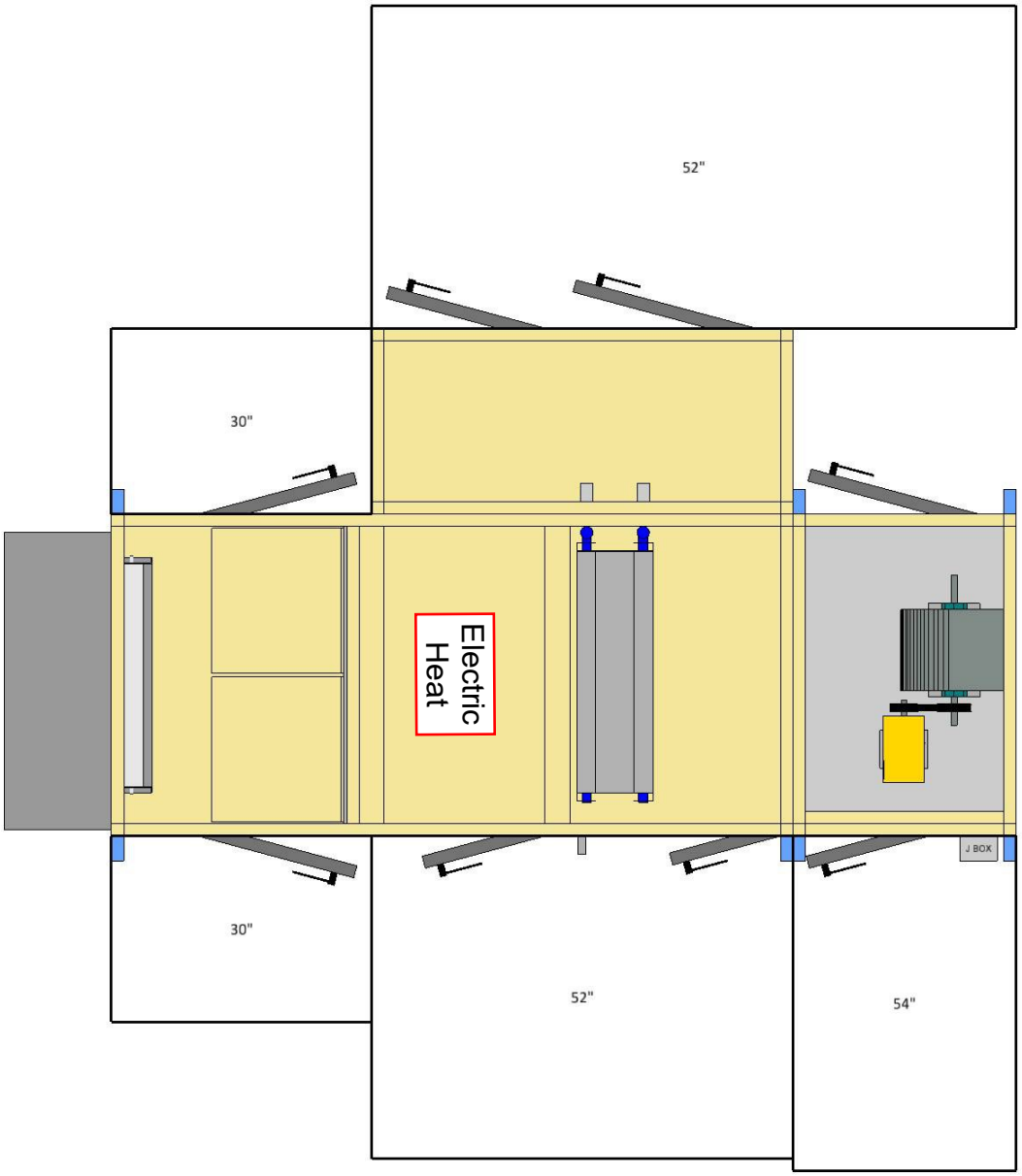

PLAN VIEW

Notes

Check local electrical component service clearance codes for specific distances.

Access is only required on one side of the unit.

Service Clearance View	Unit Tag: OAHU-2 (Eiland)			Sales Office: HTS Texas		
Product: Skyline Air Handler	Project Name: Klein ISD Eiland ES AHU replacements			Sales Engineer:		
Model: OAH007GDAM	Jan. 16, 2026	Ver/Rev:	Sheet: 1 of 1	Scale: NTS	Tolerance: +/-0.25"	Dwg Units: in

DAIKIN
13600 Industrial Park Blvd, Minneapolis, MN 55441
www.DaikinApplied.com Software Version: 13.91

All opening dimensions have a 1" mounting flange along the inner edge. The actual airflow area of the opening is 2" smaller in each dimension.

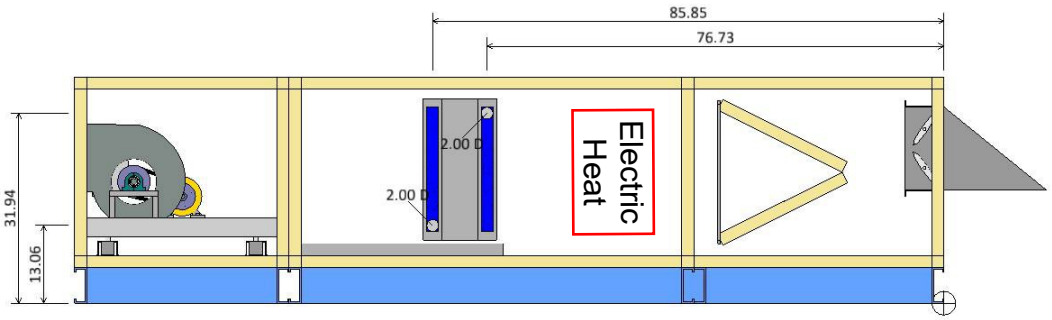

LEFT ELEVATION VIEW

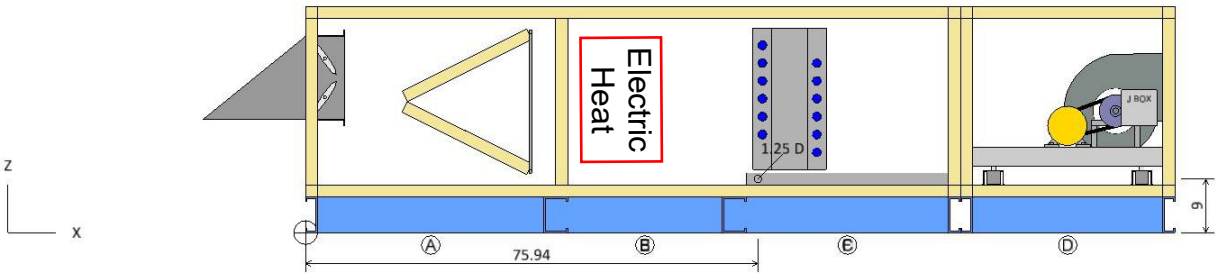

RIGHT ELEVATION VIEW

Coil and Drain Connections

	Type	X	Y	Z	Diam
Ⓒ	Chilled Water coil				
	Condensate drain conn:	75.94	-2.90	9.00	1.25
	Cold water inlet:	85.85	59.00*	13.06	2.00
	Cold water outlet:	76.73	59.00*	31.94	2.00

Roof panels add 2 inches to total unit height.

Notes:
Dimensions are measured from the origin point.
* value varies +/- 1 in.

Coil and Drain Connections	Unit Tag: OAHU-2 (Eiland)			Sales Office: HTS Texas		
Product: Skyline Air Handler	Project Name: Klein ISD Eiland ES AHU replacements			Sales Engineer:		
Model: OAH007GDAM	Jan. 16, 2026	Ver/Rev:	Sheet: 1 of 1	Scale: NTS	Tolerance: +/-0.25"	Dwg Units: in

DAIKIN
13600 Industrial Park Blvd, Minneapolis, MN 55441
www.DaikinApplied.com Software Version: 13.91

All opening dimensions have a 1" mounting flange along the inner edge. The actual airflow area of the opening is 2" smaller in each dimension.

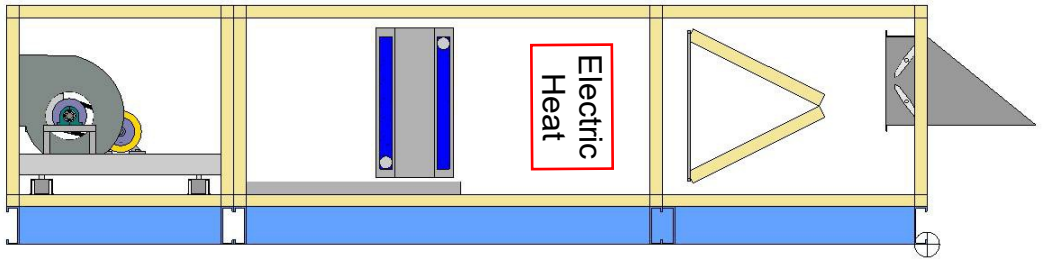

LEFT ELEVATION VIEW

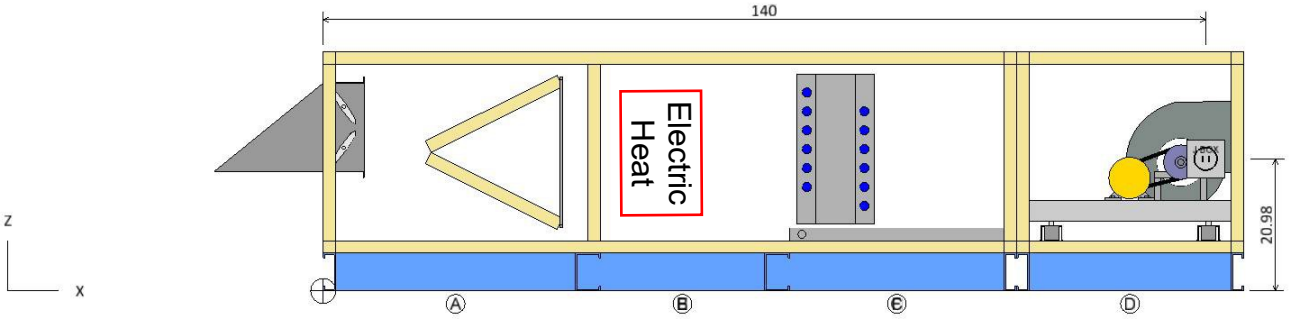

RIGHT ELEVATION VIEW

Component Key

	Type	X	Y	Z	Volts	Phase
Ⓓ	Supply Fan Fan	140.00	0.00	20.98	460	3

Roof panels add 2 inches to total unit height.

Note: Dimensions are measured from the origin point.

Electrical Connections	Unit Tag: OAHU-2 (Eiland)			Sales Office: HTS Texas		
Product: Skyline Air Handler	Project Name: Klein ISD Eiland ES AHU replacements			Sales Engineer:		
Model: OAH007GDAM	Jan. 16, 2026	Ver/Rev:	Sheet: 1 of 1	Scale: NTS	Tolerance: +/-0.25"	Dwg Units: in

DAIKIN
13600 Industrial Park Blvd, Minneapolis, MN 55441
www.DaikinApplied.com Software Version: 13.91

All opening dimensions have a 1" mounting flange along the inner edge. The actual airflow area of the opening is 2" smaller in each dimension.

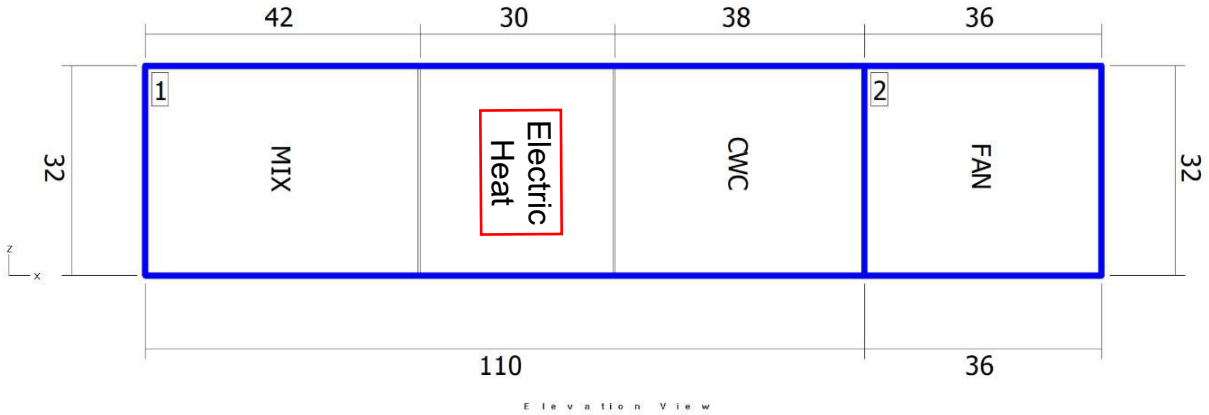

Shipping Sections

Section	Weight (lb)	X	Y	Z
Section 1	1897.92	110	52	32
Section 2	593.14	36	52	32
Total Unit	2491.05	146	82	32

Note: Base rails, curb ready base, coil connectors, drain connectors, and control boxes not included in height X, Y, Z dimensions. Shipping section may be 2" longer in air flow direction due to internal splice joint.

Shipping Sections	Unit Tag: OAHU-2 (Eiland)			Sales Office: HTS Texas		
Product: Skyline Air Handler	Project Name: Klein ISD Eiland ES AHU replacements			Sales Engineer:		
Model: OAH007GDAM	Jan. 16, 2026	Ver/Rev:	Sheet: 1 of 1	Scale: NTS	Tolerance: +/-0.25"	Dwg Units: in

DAIKIN
13600 Industrial Park Blvd, Minneapolis, MN 55441
www.DaikinApplied.com Software Version: 13.91

All opening dimensions have a 1" mounting flange along the inner edge. The actual airflow area of the opening is 2" smaller in each dimension.

Product Drawing	Unit Tag: OAHU-2 (Eiland)			Sales Office: HTS Texas			DAIKIN
Product: Skyline Air Handler	Project Name: Klein ISD Eiland ES AHU replacements			Sales Engineer:			13600 Industrial Park Blvd, Minneapolis, MN 55441
Model: OAH007GDAM	Jan. 16, 2026	Ver/Rev:	Sheet: 1 of 1	Scale: NTS	Tolerance: +/-0.25"	Dwg Units: in	www.DaikinApplied.com Software Version: 13.91

All opening dimensions have a 1" mounting flange along the inner edge. The actual airflow area of the opening is 2" smaller in each dimension.

Daikin AHU Fan Curve

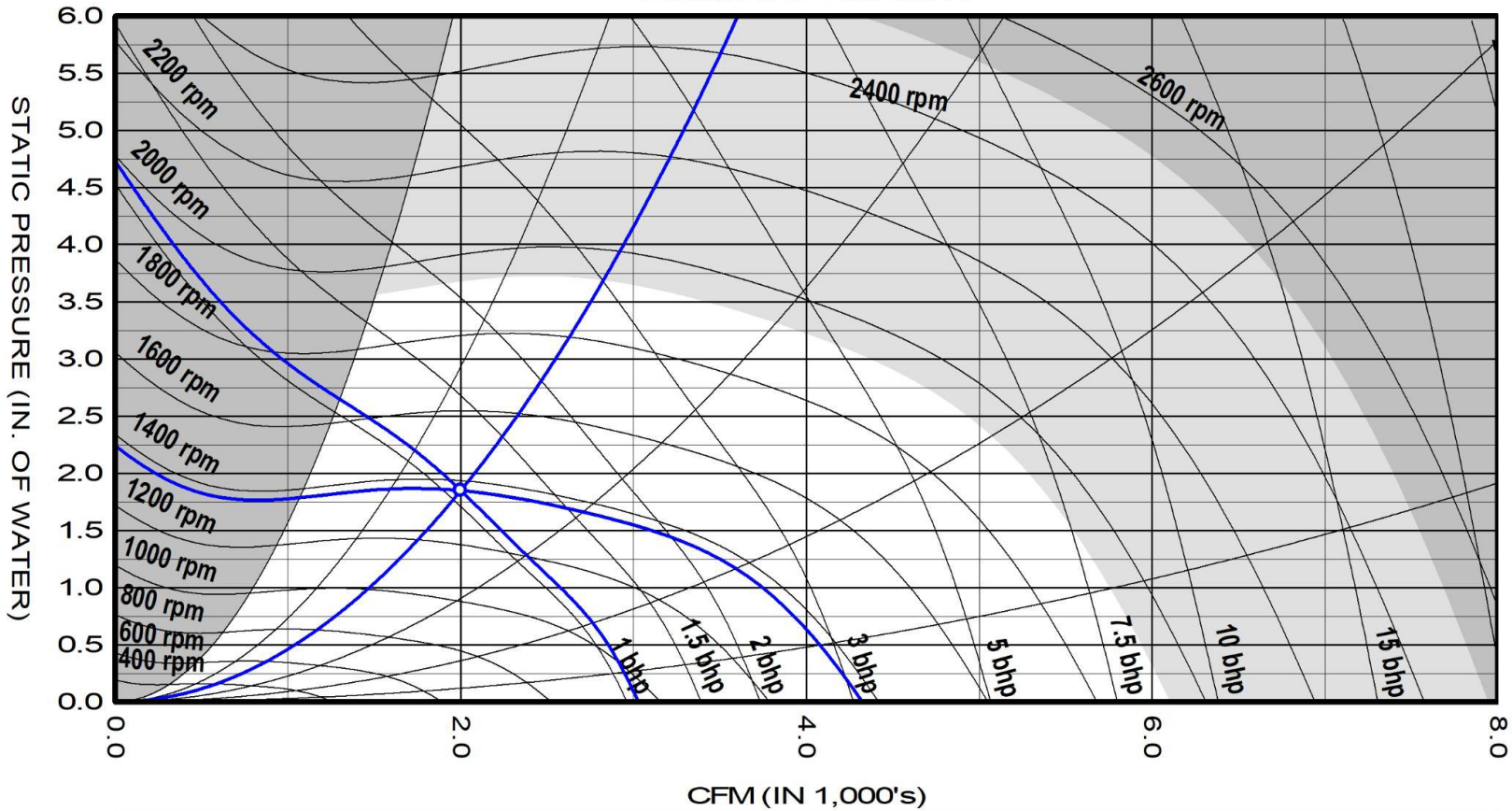

10.62" Forward Curved Supply Fan at Standard Conditions					
Air volume	2000	cfm	Fan speed	1370	rpm
Total static	1.85	insWg	Max speed	2518	rpm
Fan Shaft Power	1.1	bhp	Efficiency	54.5	%
Fan Energy Index(FEI)	1.13				

Unit tagging	OAHU-2 (Eiland)	Date	January-16-2026
Job name	Klein ISD Eiland ES AHU replacements	Time	18:34

Supply fan performance is certified in accordance with the Central Station Air-Handling Unit Certification Program, which is based on AHRI Standard 430.

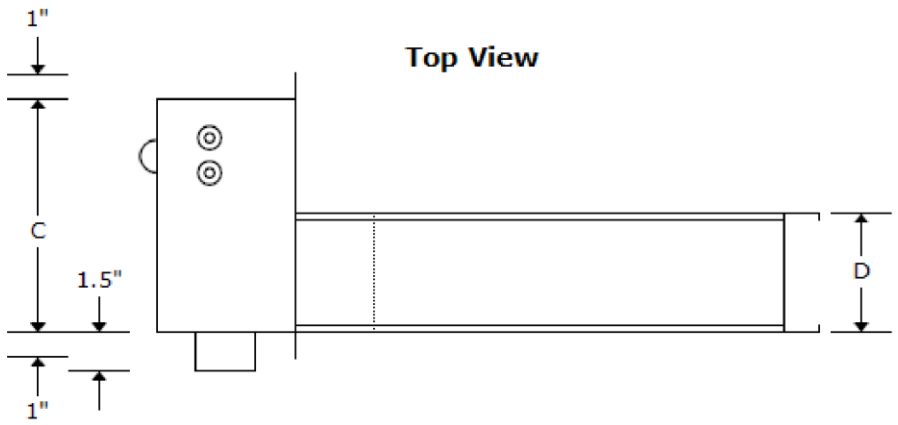

Notes

Nema 1

Horizontal Flow

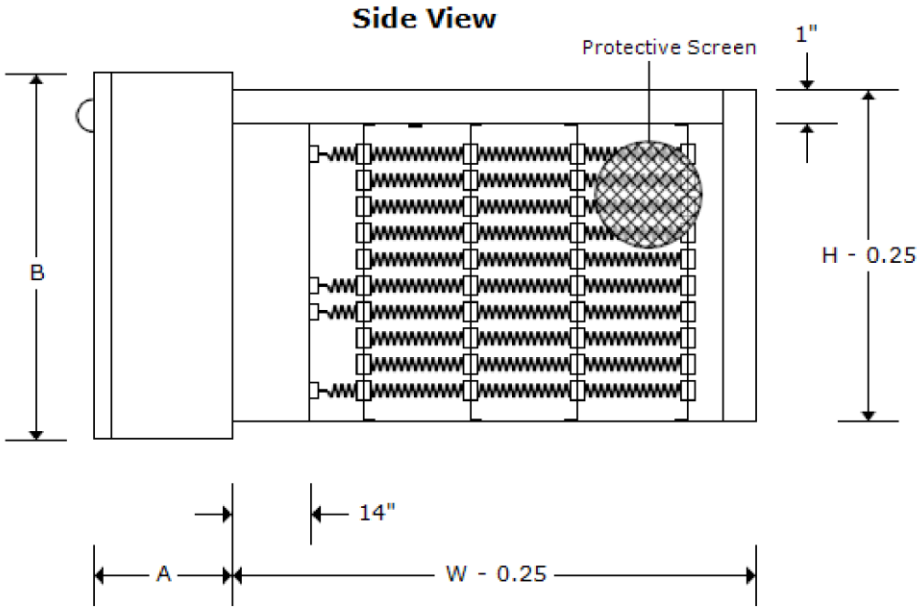

Neptronic 400 Lebeau, Montreal (QC) H4N 1R6 Tel:(514)333-1433

Proprietary Information: This document contains proprietary information and is property of Neptronic. This document and the information it contains shall not be duplicated or used in whole or in part without express written consent of Neptronic.

Mechanical Drawing
M253370024-B

Project #: 253370024
Nom Projet: Klein ISD Eiland ES - 2025 FRP
Customer Name:

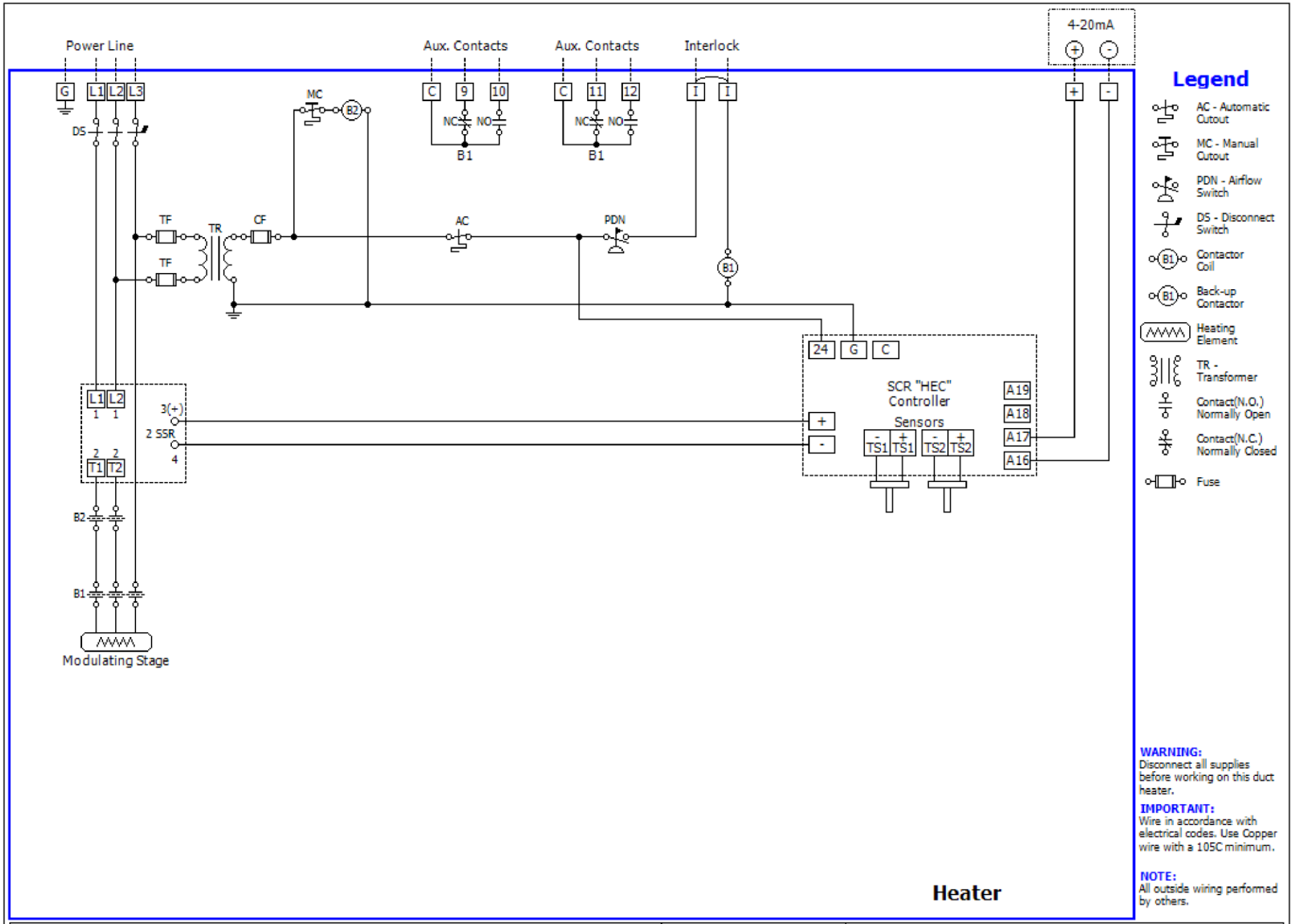

Neptronic 400 Lebeau, Montreal (QC) H4N 1R6 Tel:(514)333-1433

Proprietary Information: this document contains proprietary information & is property of Neptronic. This Document and the information it contains shall not be duplicated or used in whole or in part without the express consent of Neptronic.

ELECTRICAL DRAWING

E253370024-A

Project Number: 253370024
Project Name: Klein ISD Eiland ES - 2025 FRP
Customer Name:

Job Information	Technical Data Sheet
Job Name	Klein ISD Eiland ES AHU replacements
Date	January 16 2026
Submitted By	Salas O'Brien
Software Version	13.91
Unit Tag	OAHU-3 (Eiland)

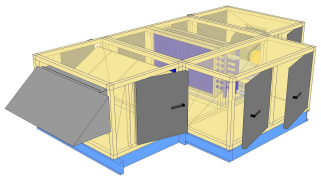

Unit Overview

Model Number	Supply					
	Air Volume cfm	Static Pressure		External Dimensions		
		External inWc	Total inWc	Height in	Width in	Length in
OAH008GDAM	3200	0.60	2.91	34*	58*	142

**Not including base rails, coil connectors, drain connectors, vestibule sections, control boxes and hoods.*

Unit

Model Number:	OAH008GDAM		
Approval:	ETL Listed / ETL Listed to Canadian Safety Standards (ETL Label / ETLc Label)		
Outer Panel:	Painted 18 gauge G60 Galvanized Steel (3000 hr. Salt Spray ASTM B-117)		
Liner:	24 gauge Galvanized Steel (unless noted per section)		
Insulation:	R-13 Injected Foam		
Unit Configuration:	Inline horizontal	**Drive (Handling) Location:**	Right
Base:	Curb ready	**Wall Thickness:**	2 in
Roof Curb Kit:	None	**Altitude:**	0 ft
Parts Warranty:	Additional One Year, Two Year Total		

Mixing Box

Component: 1 | Length: 42 in | Shipping Section: 1

Portion	Damper					Blade Action	Rated CFM	Air Pressure Drop	Quantity	Hoods
	Size (Width x Height)		Location	Type	Actuation					
	Overall	Opening								
Outside Air	54 in x 22 in	42 in x 16 in	End	Ruskin CD60	NA	Opposed	3200 cfm	0.07 insWg	1	Fitted - Factory installed
Return Air	No opening	No opening		None		None	3200 cfm		0	

Filter Data

Type	Efficiency	Nominal Face Velocity	Actual Face Velocity	Actual Face Area	Air Volume	Filter Loading
Pre Pleat	MERV 13	171 ft/min	182 ft/min	17.6 ft²	3200 cfm	Side

Air Pressure Drop				Number of Filters	Height	Width	Depth
Clean Air	Mean Air	Dirty Air	User Spec				
0.09 inWc	**0.54** inWc	1.00 inWc	N/A	2	24 in	24 in	2 in
				2	24 in	20 in	2 in
				2	24 in	12 in	2 in

Door

Location	Drive Side Door Width	Opp. Drv. Side Door Width	Opening
Both sides	26 in	26 in	Outward

Electric Heater

Component: 2 | Length: 34 in | Shipping Section: 1

Voltage	Control Type	Temperature Control	Control Signal	Pressure Drop	kW	FLA	Steps	Disconnect		Free Air Velocity ft/min
480	SCR	Yes	4 - 20mA	0.09	40	50.21	N/A	Yes		308

Notes

This component section includes equipment that is a potential source of ignition in conjunction with A2L refrigerants. Refer to relevant IOM's regarding proper interlock with required refrigeration detection systems.

Special Options

Sound Baffle

(As casing details)

Chilled Water Coil

Component: 3 | Length: 34 in | Shipping Section: 2

Coil Model	Total Capacity	Sensible Capacity	Number of Coils	Number of Rows	Fins per Inch	Tube Diameter	Tube Spacing (Face x Row)
5WS1208C	306012 Btu/hr	161937 Btu/hr	1	8	12	0.625 in	1.50 in X 1.299 in

Coil Operating Weight	Coil Dry Weight
294 lb	222 lb

Air Volume	Air Temperature				Coil Air Pressure Drop	Finned Height	Finned Length	Face Area	Face Velocity
	Entering		Leaving						
	Dry Bulb	Wet Bulb	Dry Bulb	Wet Bulb					
3200 cfm	98.0 °F	79.0 °F	51.7 °F	51.5 °F	1.65 inWc	24 in	45 in	7.50 ft²	427 ft/min

Water

Entering	Leaving	Flow Rate	Pressure Drop	Velocity	Fluid Volume	Fluid Weight	Piping Vestibule
45.0 °F	56.3 °F	54.00 gpm	7.10 ftHd	3.60 ft/s	8.0 gal	72.00 lb	30 in

Connection [Data Per Coil]				Min. Fin Surface Temp.	Min. Tube Wall Surface Temp.	Fouling Factor
Type	Size	Location	Material			
Threaded	2.00 in	Drive side	Carbon steel	45.0 °F	45.0 °F	0.000

Material				Drain Pan	Drain Side
Fin	Tube	Header	Case		
Aluminum .0075 in	Copper .020 in	Copper	Stainless steel	Stainless steel	Opp drive side

AHRI 410 Certification

Certified in accordance with the AHRI Forced-Circulation Air-Cooling and Air-Heating Coils Certification Program which is based on AHRI Standard 410 within the Range of Standard Rating Conditions listed in Table 1 of the Standard. Certified units may be found in the AHRI Directory at www.ahridirectory.org

Door

Location	Width	Opening
Non-drive side	14 in	Outward

Door

Location	Width	Opening
Drive side	30 in	Outward

Supply Fan

Component: 4 | Length: 36 in | Shipping Section: 3

Fan Performance

Air Volume	Static Pressure			Fan Energy Index(FEI)	Total Input Power	Fan Shaft Power	Fan Wheel Speed		Outlet Velocity
	External	Total	Cabinet				Operating	Maximum	
3200 cfm	0.60 inWc	2.91 inWc	0.00 inWc	0.93	2.9 kW	3.02 BHP	1772 rpm	2518 rpm	3048 ft/min

Fan Data

Fan Type	Blade Type / Class	Quantity of Fans	Wheel Diameter	Number of Blades	Discharge	Motor Location
Centrifugal DWDI	Forward Curved / 2	1	10.62 in	N/A	Top horizontal	To Side of Fan

Motor Data

Power	Electrical Supply	Speed	Efficiency	Enclosure	Frame Size	Supplier	Number of Poles	Lock Rotor Current	Full Load Current
5.0 HP	460/60/3 V/Hz/Phase	1750 rpm	Premium	TEFC	184 T frame	Generic	4	47.04 A	6.70 A

Fan Options

Shaft Grounding Kit:	Provided	**Isolator Type:**	Spring

Drive Package Data*

Fan Sheave	Motor Sheave	Belt	Number of Belts	Actual Drive S.F.	Bearing Type
AK61H	AK61H	A30	2	1.14	Standard - L50 (200K)

**Daikin Applied reserves the right to provide a different but equivalent drive package*

VFD/Starter/Disconnect Data

Selection Type:	External J-Box	**Vendor:**	Factory Standard
Voltage:	460 V	**Height x Width x Depth:**	6.00 in x 6.00 in x 4.00 in
Mounting:	Door Side	**Enclosure:**	NEMA 3R

Door

Location	Drive Side Door Width	Opp. Drv. Side Door Width	Opening
Both sides	20 in	28 in	Outward

Unit Sound Power (dB)

Type	63 Hz	125 Hz	250 Hz	500 Hz	1000 Hz	2000 Hz	4000 Hz	8000 Hz
Radiated:	76	79	66	62	63	53	46	51
Unit Discharge:	86	89	84	83	85	81	80	77
Unit Return:	76	79	66	66	68	64	60	54

Shipping Section Details

Section	Length in	Weight lb	Corner Weights (lb)				Center of Gravity (in)		
			P1	P2	P3	P4	XX	YY	ZZ
1	42	636	169	169	149	149	20	29	18
2	64	1435	535	174	222	584	34	15	21
3	36	684	197	145	146	197	18	25	19
Entire Unit	**142**	**2755**	**875**	**462**	**542**	**955**	**75**	**21**	**20**

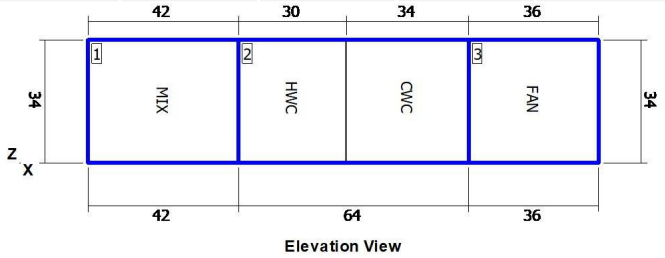

Elevation View

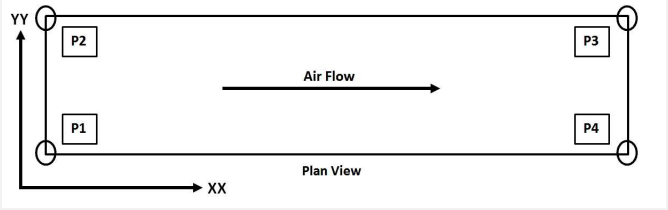

Plan View

NOTE: Piping vestibule shipping section length(s) not included in the total shipping section length.

NOTE: Piping vestibule(s) are shipped attached to the coil section(s).

NOTE: Special components aren't included in the corner weights and center of gravity data.

NOTE: Shipping weights listed do not include weight of water (listed in coil section(s) above.

Shipping Protection

None

Supply Static Pressure Drop

Component	Option	Static Pressure Drop
Mixing Box	Filter	0.54 insWg
Mixing Box	Mixing Box	0.07 insWg
Hot Water Coil	Hot Water Coil	0.05 insWg
Chilled Water coil	Chilled Water coil	1.65 insWg
Supply Fan	Cabinet	
External Static	External Static	0.60 insWg
Total Supply Fan Static		2.91 insWg

Minimum Recommended Drain Pan Trap Dimensions

Shipping Section	Component	H
2	Chilled Water coil	5.12

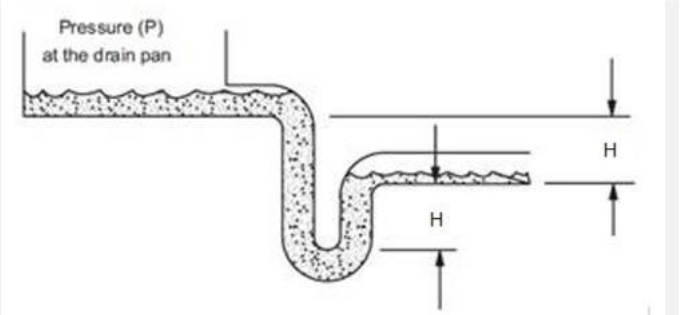

Dimensions provided as a courtesy and are recommended minimums only. Daikin is not responsible for supplying or designing drain pan traps and is not responsible for any damage caused by incorrect trap heights. The dimensions listed above should be reviewed and approved by a licensed plumbing professional.

This calculation is based on an assumption that 0.25 inches of the external static pressure is in the return duct and the remainder is in the supply duct. If actual conditions vary from this assumption then contact Applications for new trap height recommendations.

AHRI Certification



Certified by the AHRI Central Station Air-Handling Unit (AHU) Certification Program, which is based on AHRI Standard 430/431. AHRI certified units are subject to rigorous and continuous testing, have performance ratings independently measured and are third-party verified. Certified units may be found in the AHRI Directory at www.ahridirectory.org.

Notes

Standard
1. As a standalone component, unit meets or exceeds requirements of ASHRAE 90.1 - 2007. The approving authority is responsible for compliance of multi - component building systems.

BQZQ3P

Klein ISD Eiland ES AHU re

35

1/16/2026

OAHU-3 (Eiland)

Drawing

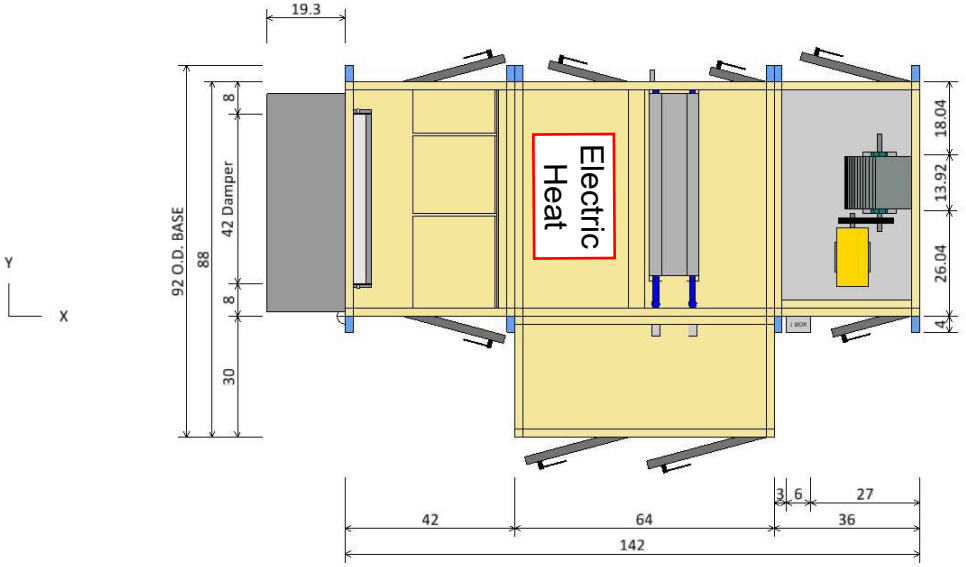

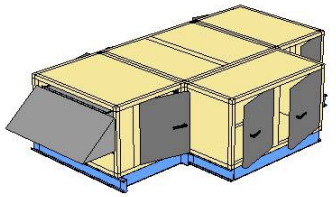

PLAN VIEW

ISOMETRIC VIEW

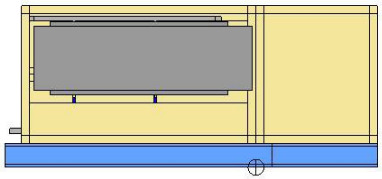

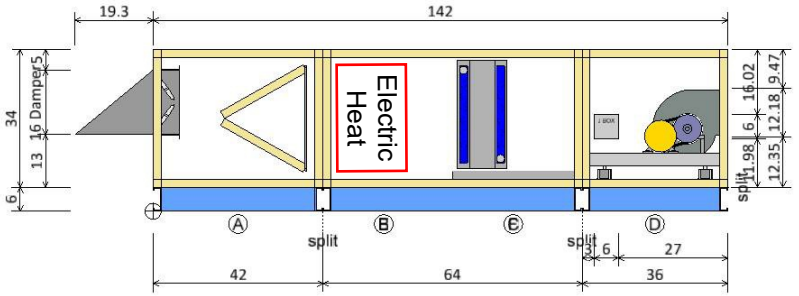

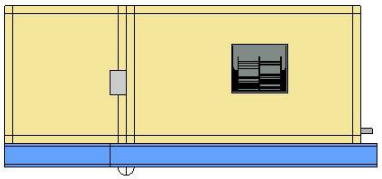

Z
X

FRONT END VIEW

ELEVATION VIEW

REAR END VIEW

Plan/Elevation	Unit Tag: OAHU-3 (Eiland)			Sales Office: HTS Texas		
Product: Skyline Air Handler	Project Name: Klein ISD Eiland ES AHU replacements			Sales Engineer:		
Model: OAH008GDAM	Jan. 16, 2026	Ver/Rev:	Sheet: 1 of 1	Scale: NTS	Tolerance: +/-0.25"	Dwg Units: in

DAIKIN

13600 Industrial Park Blvd, Minneapolis, MN 55441

www.DaikinApplied.com Software Version: 13.91

All opening dimensions have a 1" mounting flange along the inner edge. The actual airflow area of the opening is 2" smaller in each dimension.

BQZQ3P

Klein ISD Eiland ES AHU re

36

1/16/2026

OAHU-3 (Eiland)

Drawing

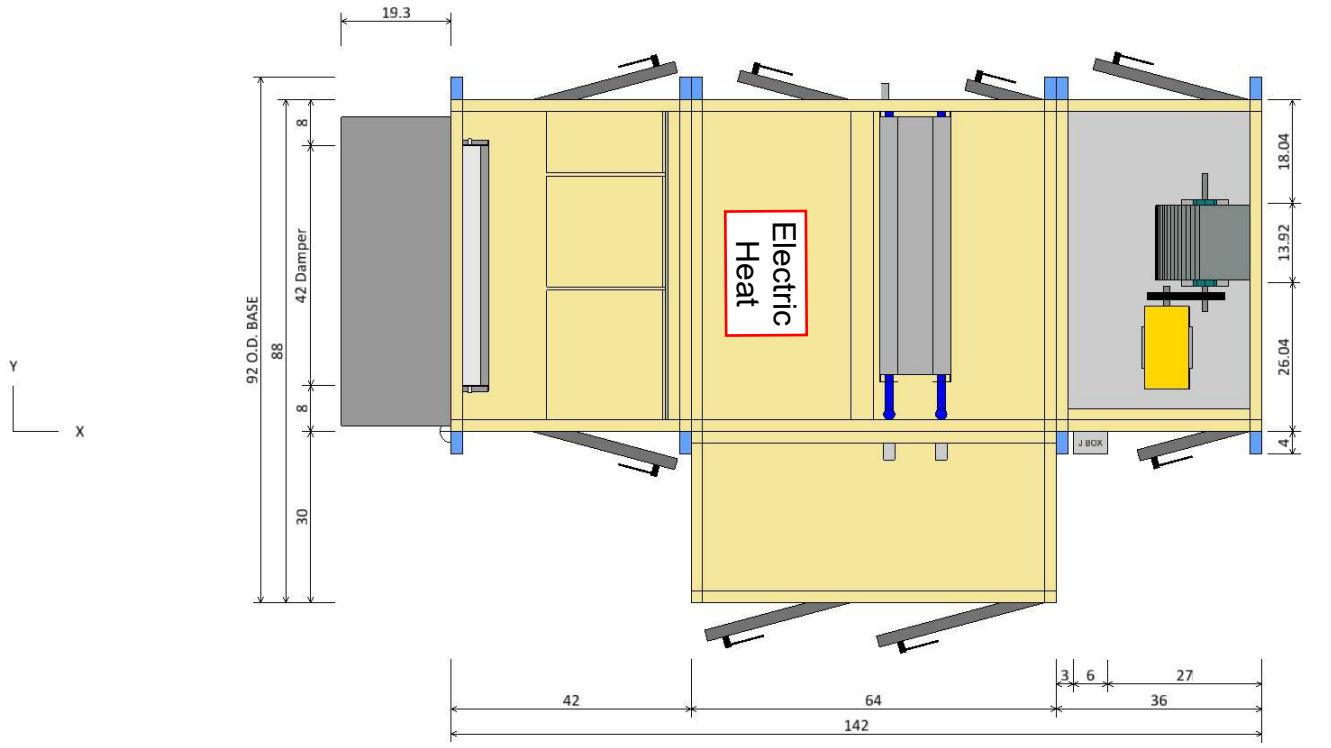

PLAN VIEW

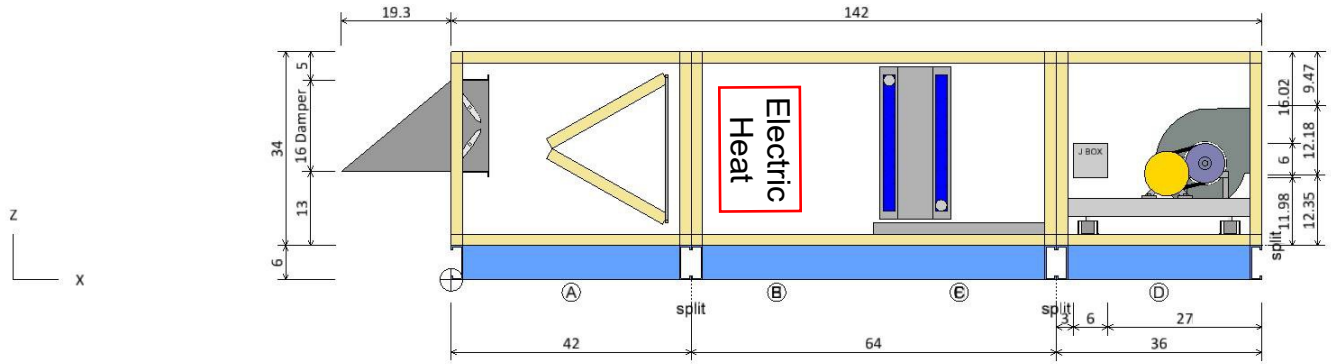

ELEVATION VIEW

Component Key		
Ⓐ	Mixing Box	
	Filter Type:	Pre Pleat M13
	Right Door (WxH):	26 ins x 30 ins
	Left Door (WxH):	26 ins x 30 ins
Ⓑ	Hot Water Coil	
	Coil Model:	5WH0001C
	Total Capacity:	0.0 Btu/hr
	Left Door (WxH):	20 ins x 26 ins
Ⓒ	Chilled Water coil	
	Coil Model:	5WS1208C
	Total Capacity:	306012.0 Btu/hr
	Left Door (WxH):	14 ins x 24 ins
Ⓓ	Supply Fan	
	Fan Type:	Centrifugal DWDI
	Fan Size (Class):	10 (2)
	Air Flowrate:	3200.0 cfm
	T.S.P:	2.9 insWg
	Motor Power:	5.0 HP
	Right Door (WxH):	20 ins x 30 ins
	Left Door (WxH):	28 ins x 30 ins
Ⓔ	Vestibule Section	
	Right Door (WxH):	26 ins x 30 ins
Ⓕ	Vestibule Section	
	Right Door (WxH):	30 ins x 30 ins

Opening dimensions shown are for unit only, refer to curb drawing for duct opening dimensions.

Roof panels add 2 inches to total unit height.

Plan/Elevation - No Ends	Unit Tag: OAHU-3 (Eiland)			Sales Office: HTS Texas		
Product: Skyline Air Handler	Project Name: Klein ISD Eiland ES AHU replacements			Sales Engineer:		
Model: OAH008GDAM	Jan. 16, 2026	Ver/Rev:	Sheet: 1 of 1	Scale: NTS	Tolerance: +/-0.25"	Dwg Units: in

DAIKIN

13600 Industrial Park Blvd, Minneapolis, MN 55441

www.DaikinApplied.com Software Version: 13.91

All opening dimensions have a 1" mounting flange along the inner edge. The actual airflow area of the opening is 2" smaller in each dimension.

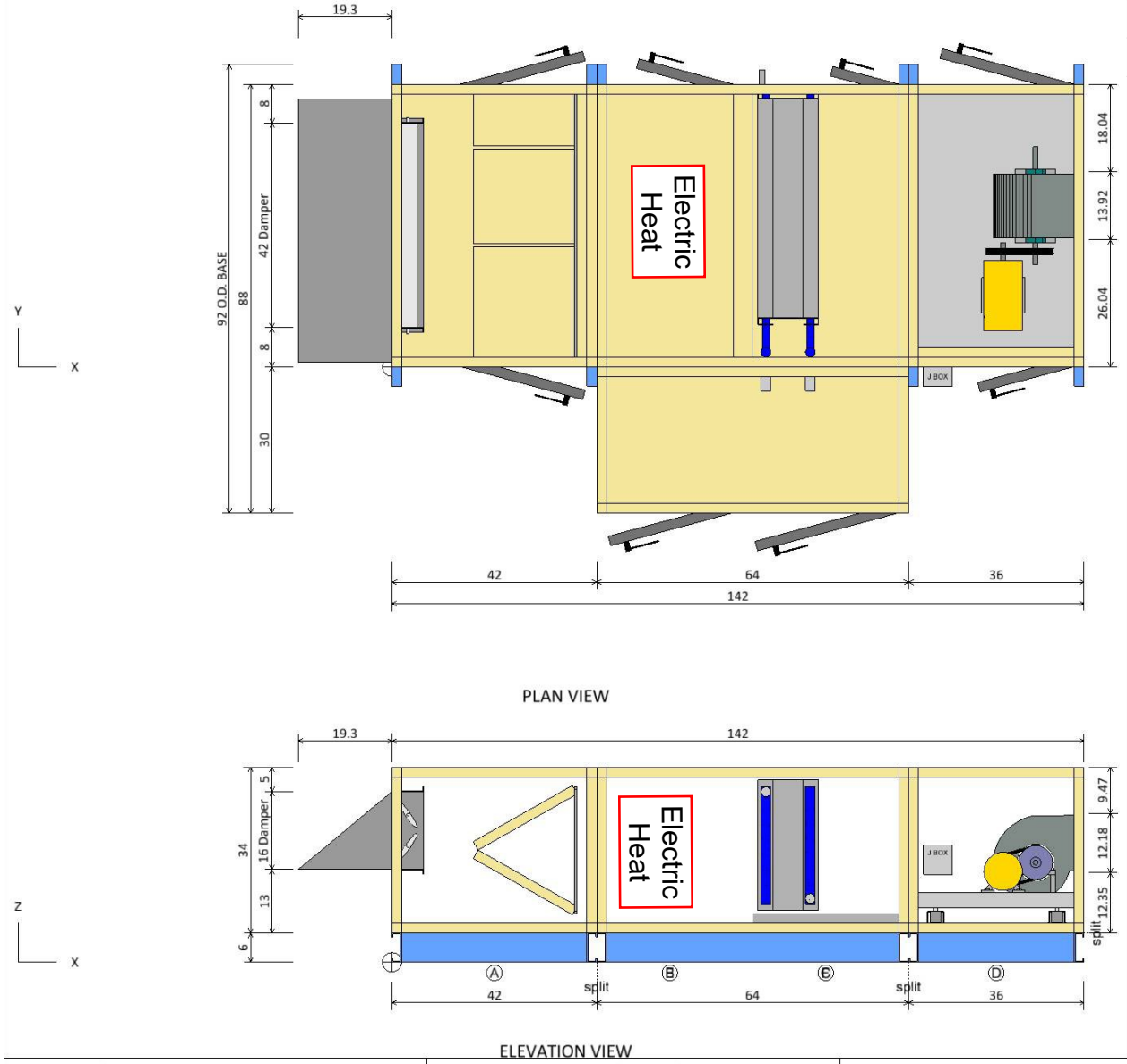

Component Key

	Type	X	Y	Z	Wid	Hgt
Ⓐ	Mixing Box Outside air damper	0.00	2.00	16.00	54.00	22.00
Ⓓ	Supply Fan Fan Discharge	142.00	26.04	18.35	13.92	12.18

Opening dimensions shown are for unit only, refer to curb drawing for duct opening dimensions.

Roof panels add 2 inches to total unit height.

Note: Dimensions are measured from the origin point.
Note: Openings with or without dampers are recessed into the unit by approximately 1.75 in.

Opening/Damper Connections	Unit Tag: OAHU-3 (Eiland)			Sales Office: HTS Texas		
Product: Skyline Air Handler	Project Name: Klein ISD Eiland ES AHU replacements			Sales Engineer:		
Model: OAH008GDAM	Jan. 16, 2026	Ver/Rev:	Sheet: 1 of 1	Scale: NTS	Tolerance: +/-0.25"	Dwg Units: in

DAIKIN
13600 Industrial Park Blvd, Minneapolis, MN 55441
www.DaikinApplied.com Software Version: 13.91

All opening dimensions have a 1" mounting flange along the inner edge. The actual airflow area of the opening is 2" smaller in each dimension.

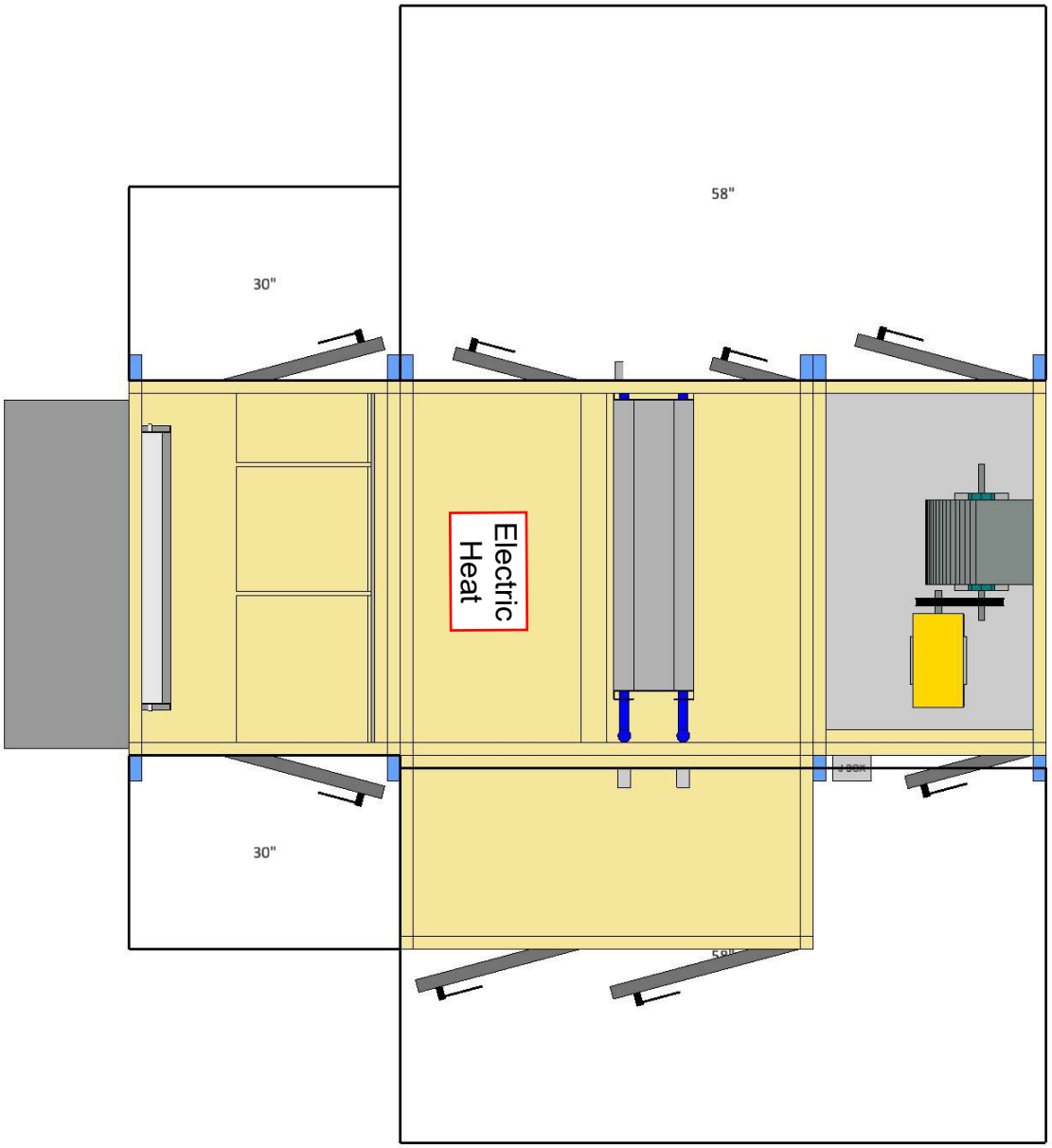

PLAN VIEW

Notes
Check local electrical component service clearance codes for specific distances. Access is only required on one side of the unit.

Service Clearance View	Unit Tag: OAHU-3 (Eiland)			Sales Office: HTS Texas		
Product: Skyline Air Handler	Project Name: Klein ISD Eiland ES AHU replacements			Sales Engineer:		
Model: OAH008GDAM	Jan. 16, 2026	Ver/Rev:	Sheet: 1 of 1	Scale: NTS	Tolerance: +/-0.25"	Dwg Units: in

DAIKIN
13600 Industrial Park Blvd, Minneapolis, MN 55441
www.DaikinApplied.com Software Version: 13.91

All opening dimensions have a 1" mounting flange along the inner edge. The actual airflow area of the opening is 2" smaller in each dimension.

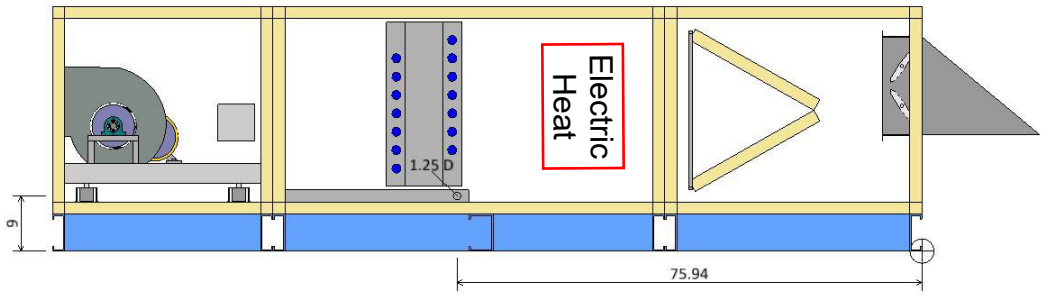

LEFT ELEVATION VIEW

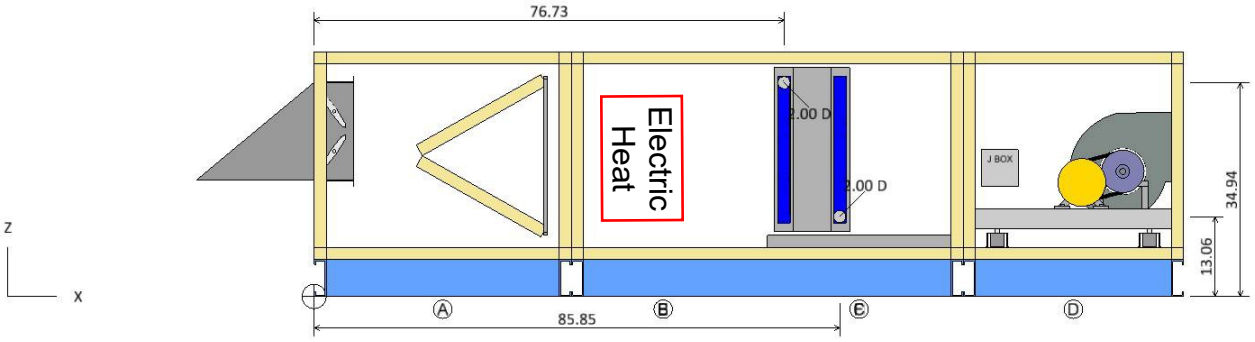

RIGHT ELEVATION VIEW

Coil and Drain Connections

	Type	X	Y	Z	Diam
Ⓒ	Chilled Water coil Condensate drain conn:	75.94	60.90	9.00	1.25
	Cold water inlet:	85.85	-7.00*	13.06	2.00
	Cold water outlet:	76.73	-7.00*	34.94	2.00

Roof panels add 2 inches to total unit height.

Notes:
Dimensions are measured from the origin point.
* value varies +/- 1 in.

Coil and Drain Connections	Unit Tag: OAHU-3 (Eiland)			Sales Office: HTS Texas		
Product: Skyline Air Handler	Project Name: Klein ISD Eiland ES AHU replacements			Sales Engineer:		
Model: OAH008GDAM	Jan. 16, 2026	Ver/Rev:	Sheet: 1 of 1	Scale: NTS	Tolerance: +/-0.25"	Dwg Units: in

DAIKIN
13600 Industrial Park Blvd, Minneapolis, MN 55441
www.DaikinApplied.com Software Version: 13.91

All opening dimensions have a 1" mounting flange along the inner edge. The actual airflow area of the opening is 2" smaller in each dimension.

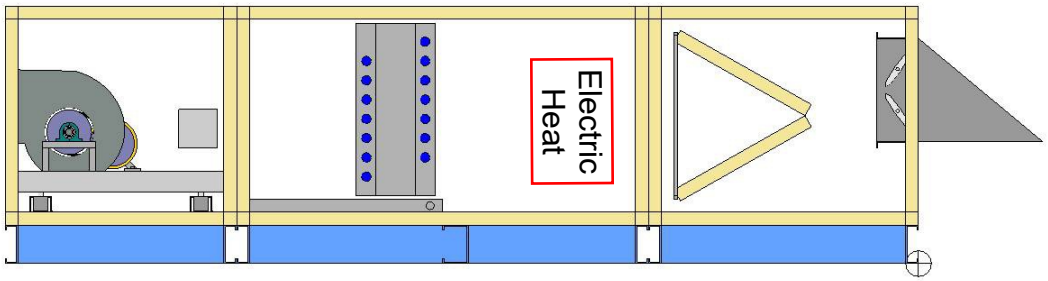

LEFT ELEVATION VIEW

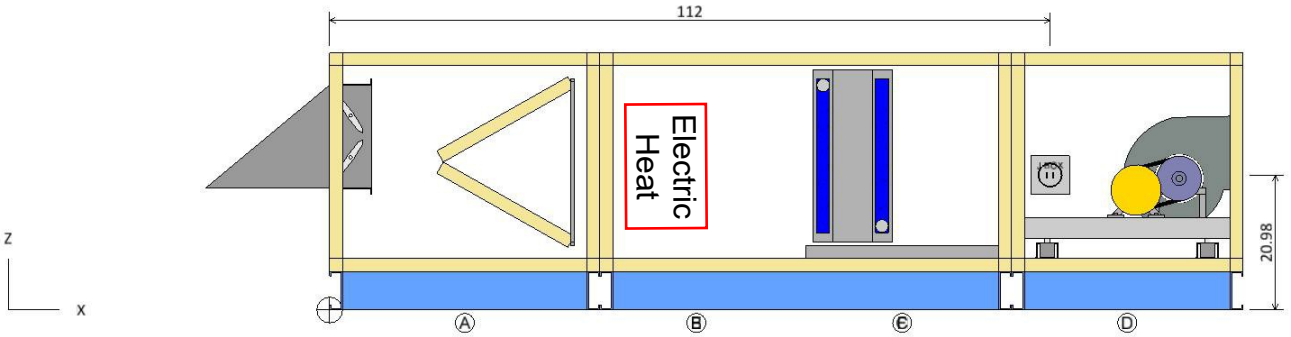

RIGHT ELEVATION VIEW

Component Key

	Type	X	Y	Z	Volts	Phase
Ⓓ	Supply Fan Fan	112.00	0.00	20.98	460	3

Roof panels add 2 inches to total unit height.

Note: Dimensions are measured from the origin point.

Electrical Connections	Unit Tag: OAHU-3 (Eiland)			Sales Office: HTS Texas		
Product: Skyline Air Handler	Project Name: Klein ISD Eiland ES AHU replacements			Sales Engineer:		
Model: OAH008GDAM	Jan. 16, 2026	Ver/Rev:	Sheet: 1 of 1	Scale: NTS	Tolerance: +/-0.25"	Dwg Units: in

DAIKIN
13600 Industrial Park Blvd, Minneapolis, MN 55441
www.DaikinApplied.com Software Version: 13.91

All opening dimensions have a 1" mounting flange along the inner edge. The actual airflow area of the opening is 2" smaller in each dimension.

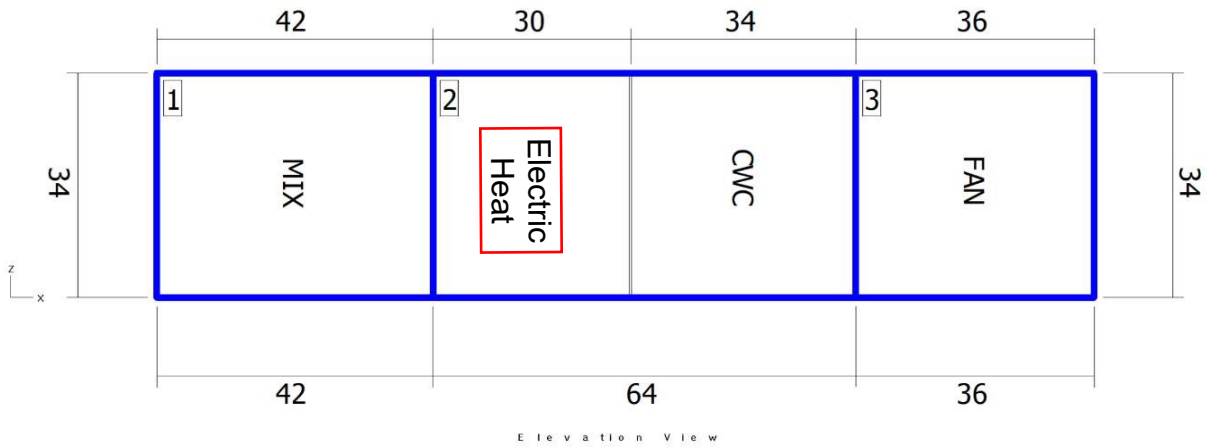

Shipping Sections

Section	Weight (lb)	X	Y	Z
Section 1	635.98	42	58	34
Section 2	1434.81	64	58	34
Section 3	684.14	36	58	34
Total Unit	2754.93	142	88	34

Note: Base rails, curb ready base, coil connectors, drain connectors, and control boxes not included in height X, Y, Z dimensions.
Shipping section may be 2" longer in air flow direction due to internal splice joint.

Shipping Sections	Unit Tag: OAHU-3 (Eiland)			Sales Office: HTS Texas		
Product: Skyline Air Handler	Project Name: Klein ISD Eiland ES AHU replacements			Sales Engineer:		
Model: OAH008GDAM	Jan. 16, 2026	Ver/Rev:	Sheet: 1 of 1	Scale: NTS	Tolerance: +/-0.25"	Dwg Units: in

DAIKIN
13600 Industrial Park Blvd, Minneapolis, MN 55441
www.DaikinApplied.com Software Version: 13.91

All opening dimensions have a 1" mounting flange along the inner edge. The actual airflow area of the opening is 2" smaller in each dimension.

Product Drawing	Unit Tag: OAHU-3 (Eiland)			Sales Office: HTS Texas			DAIKIN
Product: Skyline Air Handler	Project Name: Klein ISD Eiland ES AHU replacements			Sales Engineer:			13600 Industrial Park Blvd, Minneapolis, MN 55441
Model: OAH008GDAM	Jan. 16, 2026	Ver/Rev:	Sheet: 1 of 1	Scale: NTS	Tolerance: +/-0.25"	Dwg Units: in	www.DaikinApplied.com Software Version: 13.91

All opening dimensions have a 1" mounting flange along the inner edge. The actual airflow area of the opening is 2" smaller in each dimension.

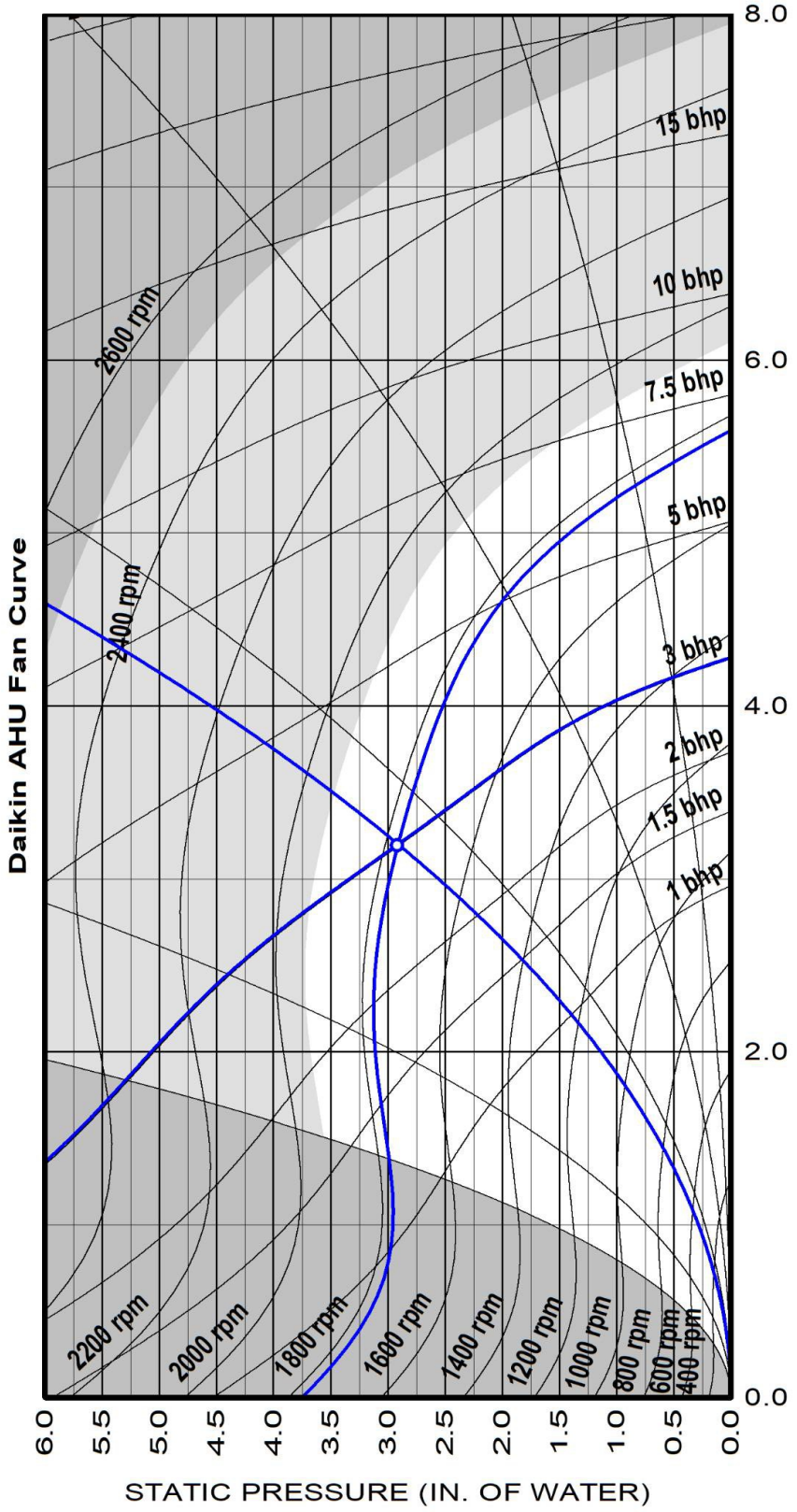

10.62" Forward Curved Supply Fan at Standard Conditions

Air volume	3200	cfm	Fan speed	1772	rpm
Total static	2.91	insWg	Max speed	2518	rpm
Fan Shaft Power	3.0	bhp	Efficiency	48.6	%
Fan Energy Index(FEI)	0.93				

Unit tagging OAHU-3 (Eiland) Date January-16-2026

Job name Klein ISD Eiland ES AHU replacements Time 17:03

Supply fan performance is certified in accordance with the Central Station Air-Handling Unit Certification Program, which is based on AHRI Standard 430.

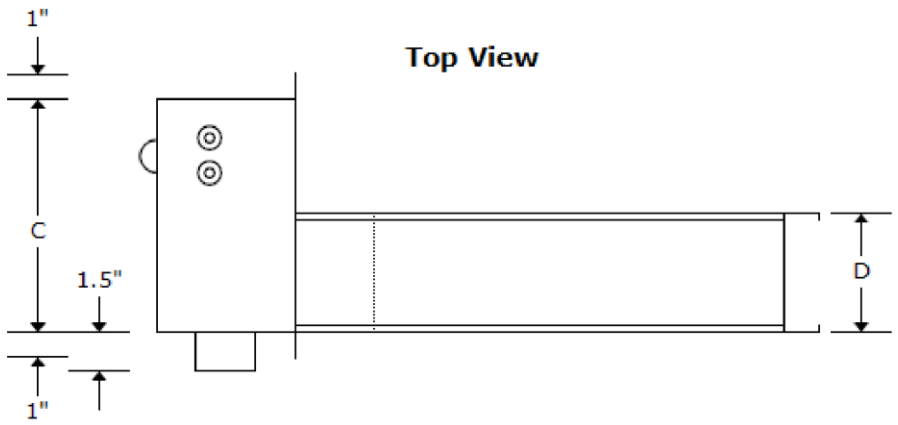

Notes

Nema 1

Horizontal Flow

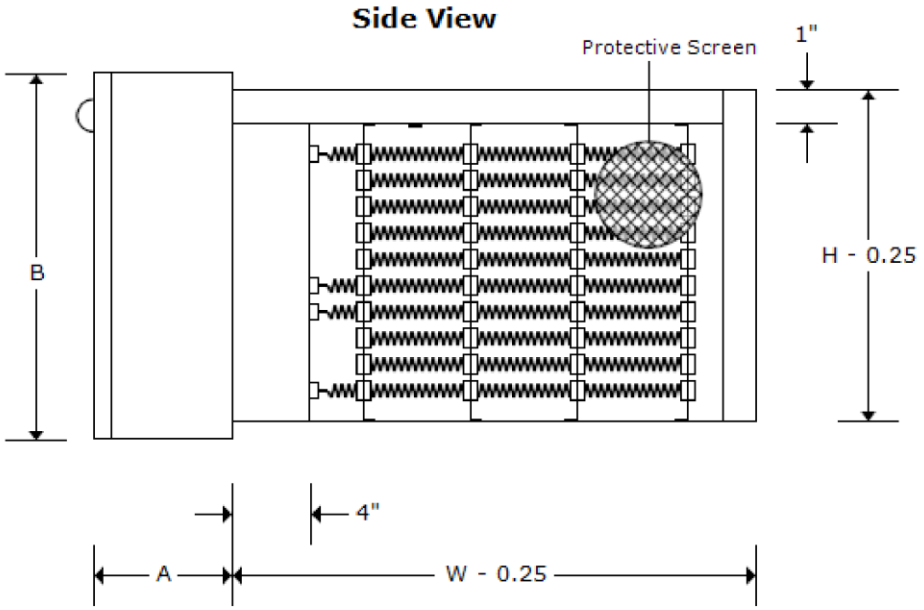

Neptronic 400 Lebeau, Montreal (QC) H4N 1R6 Tel:(514)333-1433

Proprietary Information: This document contains proprietary information and is property of Neptronic. This document and the information it contains shall not be duplicated or used in whole or in part without express written consent of Neptronic.

Mechanical Drawing
M253370024-C

Project #: 253370024
Nom Projet: Klein ISD Eiland ES - 2025 FRP
Customer Name:

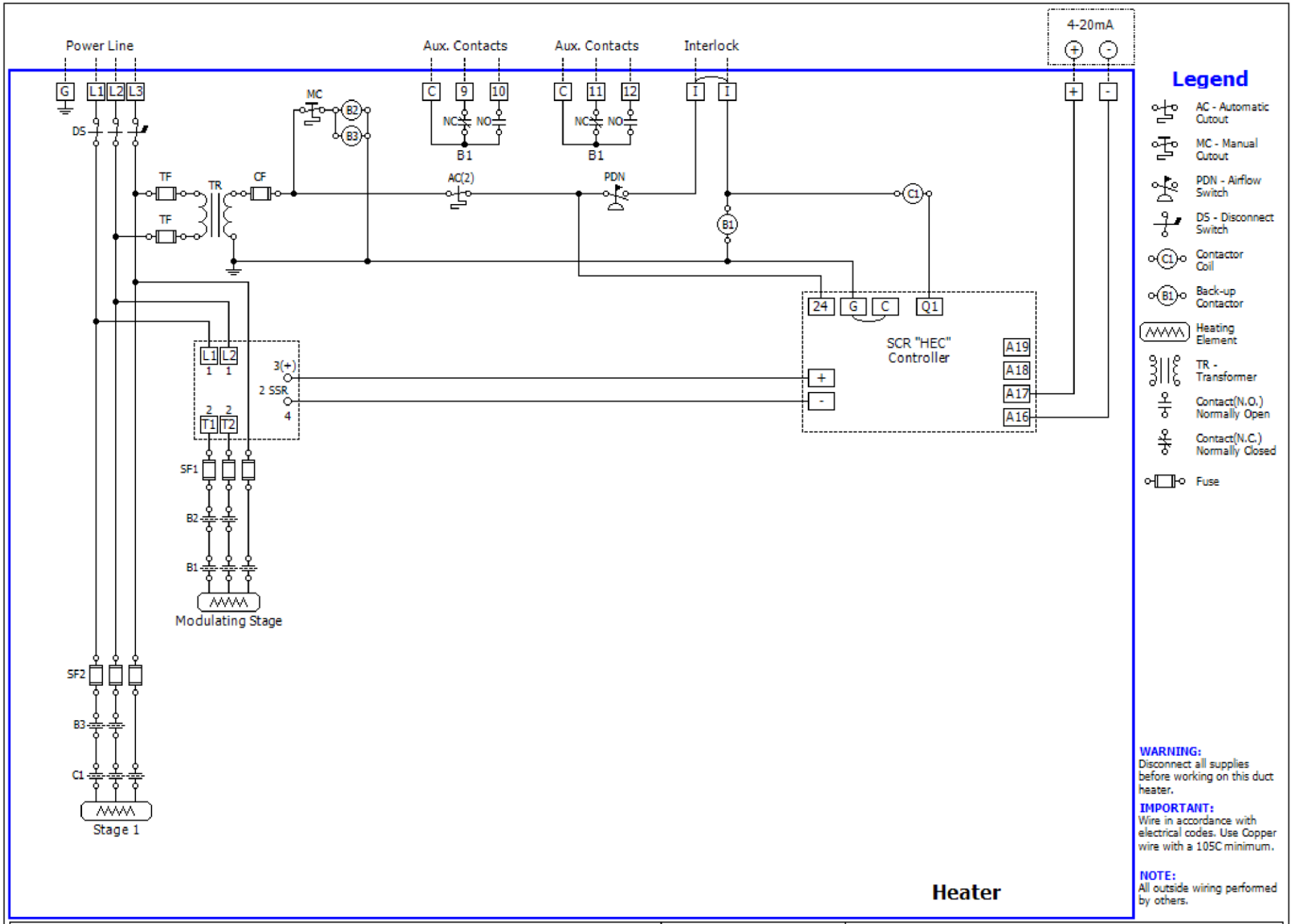

Neptronic 400 Lebeau, Montreal (QC) H4N 1R6 Tel:(514)333-1433

Proprietary Information: this document contains proprietary information & is property of Neptronic. This Document and the information it contains shall not be duplicated or used in whole or in part without the express consent of Neptronic.

ELECTRICAL DRAWING

E253370024-B

Project Number: 253370024

Project Name: Klein ISD Eiland ES - 2025 FRP

Customer Name:

Job Information	Technical Data Sheet
Job Name	Klein ISD Eiland ES AHU replacements
Date	January 16 2026
Submitted By	Salas O'Brien
Software Version	13.91
Unit Tag	OAHU-4 (Eiland)

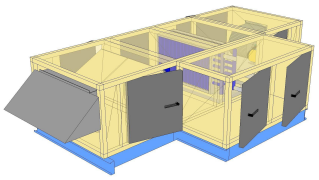

Unit Overview

Model Number	Supply					
	Air Volume cfm	Static Pressure		External Dimensions		
		External inWc	Total inWc	Height in	Width in	Length in
OAH006GDAM	1900	0.60	1.85	32*	50*	140

**Not including base rails, coil connectors, drain connectors, vestibule sections, control boxes and hoods.*

Unit

Model Number:	OAH006GDAM		
Approval:	ETL Listed / ETL Listed to Canadian Safety Standards (ETL Label / ETLc Label)		
Outer Panel:	Painted 18 gauge G60 Galvanized Steel (3000 hr. Salt Spray ASTM B-117)		
Liner:	24 gauge Galvanized Steel (unless noted per section)		
Insulation:	R-13 Injected Foam		
Unit Configuration:	Inline horizontal	**Drive (Handling) Location:**	Right
Base:	Curb ready	**Wall Thickness:**	2 in
Roof Curb Kit:	None	**Altitude:**	0 ft
Parts Warranty:	Additional One Year, Two Year Total		

Mixing Box

Component: 1 | Length: 42 in | Shipping Section: 1

Portion	Damper					Blade Action	Rated CFM	Air Pressure Drop	Quantity	Hoods
	Size (Width x Height)		Location	Type	Actuation					
	Overall	Opening								
Outside Air	46 in x 20 in	34 in x 14 in	End	Ruskin CD60	NA	Opposed	1900 cfm	0.05 insWg	1	Fitted - Factory installed
Return Air	No opening	No opening		None		None	1900 cfm		0	

Filter Data

Type	Efficiency	Nominal Face Velocity	Actual Face Velocity	Actual Face Area	Air Volume	Filter Loading
Pre Pleat	MERV 13	130 ft/min	137 ft/min	13.9 ft²	1900 cfm	Side

Air Pressure Drop				Number of Filters	Height	Width	Depth
Clean Air	Mean Air	Dirty Air	User Spec				
0.06 inWc	**0.53** inWc	1.00 inWc	N/A	2	24 in	24 in	2 in
				2	24 in	20 in	2 in

Door

Location	Drive Side Door Width	Opp. Drv. Side Door Width	Opening
Both sides	26 in	26 in	Outward

Electric Heater

Component: 2 | Length: 34 in | Shipping Section: 1

Voltage	Control Type	Temperature Control	Control Signal	Pressure Drop	kW	FLA	Steps	Disconnect		Free Air Velocity ft/min
480	SCR	Yes	4 - 20mA	0.07	24	30.12	N/A	Yes		304

Notes

This component section includes equipment that is a potential source of ignition in conjunction with A2L refrigerants. Refer to relevant IOM's regarding proper interlock with required refrigeration detection systems.

Special Options

Sound Baffle

(As casing details)

Chilled Water Coil

Component: 3 | Length: 32 in | Shipping Section: 1

Coil Model	Total Capacity	Sensible Capacity	Number of Coils	Number of Rows	Fins per Inch	Tube Diameter	Tube Spacing (Face x Row)
5WL1108B	179934 Btu/hr	95405 Btu/hr	1	8	11	0.625 in	1.50 in X 1.299 in

Coil Operating Weight	Coil Dry Weight
217 lb	163 lb

Air Volume	Air Temperature				Coil Air Pressure Drop	Finned Height	Finned Length	Face Area	Face Velocity
	Entering		Leaving						
	Dry Bulb	Wet Bulb	Dry Bulb	Wet Bulb					
1900 cfm	98.0 °F	79.0 °F	52.1 °F	51.9 °F	0.62 inWc	21 in	37 in	5.40 ft²	352 ft/min

Water

Entering	Leaving	Flow Rate	Pressure Drop	Velocity	Fluid Volume	Fluid Weight	Piping Vestibule
45.0 °F	55.9 °F	33.00 gpm	6.20 ftHd	3.40 ft/s	6.0 gal	54.00 lb	30 in

Connection [Data Per Coil]				Min. Fin Surface Temp.	Min. Tube Wall Surface Temp.	Fouling Factor
Type	Size	Location	Material			
Threaded	2.00 in	Drive side	Carbon steel	45.0 °F	45.0 °F	0.000

Material				Drain Pan	Drain Side
Fin	Tube	Header	Case		
Aluminum .0075 in	Copper .020 in	Copper	Stainless steel	Stainless steel	Opp drive side

AHRI 410 Certification

Certified in accordance with the AHRI Forced-Circulation Air-Cooling and Air-Heating Coils Certification Program which is based on AHRI Standard 410 within the Range of Standard Rating Conditions listed in Table 1 of the Standard. Certified units may be found in the AHRI Directory at www.ahridirectory.org

Door

Location	Width	Opening
Non-drive side	12 in	Outward

Door

Location	Width	Opening
Drive side	28 in	Outward

Supply Fan

Component: 4 | Length: 36 in | Shipping Section: 2

Fan Performance

Air Volume	Static Pressure			Fan Energy Index(FEI)	Total Input Power	Fan Shaft Power	Fan Wheel Speed		Outlet Velocity
	External	Total	Cabinet				Operating	Maximum	
1900 cfm	0.60 inWc	1.85 inWc	0.00 inWc	1.15	1.1 kW	1.00 BHP	1367 rpm	2518 rpm	1810 ft/min

Fan Data

Fan Type	Blade Type / Class	Quantity of Fans	Wheel Diameter	Number of Blades	Discharge	Motor Location
Centrifugal DWDI	Forward Curved / 2	1	10.62 in	N/A	Top horizontal	To Side of Fan

Motor Data

Power	Electrical Supply	Speed	Efficiency	Enclosure	Frame Size	Supplier	Number of Poles	Lock Rotor Current	Full Load Current
2.0 HP	460/60/3 V/Hz/Phase	1750 rpm	Premium	TEFC	145 T frame	Generic	4	23.83 A	2.90 A

Fan Options

Shaft Grounding Kit:	Provided	**Isolator Type:**	Rubber in shear

Drive Package Data*

Fan Sheave	Motor Sheave	Belt	Number of Belts	Actual Drive S.F.	Bearing Type
AK46H	AK34H	A27	2	1.11	Standard - L50 (200K)

**Daikin Applied reserves the right to provide a different but equivalent drive package*

VFD/Starter/Disconnect Data

Selection Type:	External J-Box	**Vendor:**	Factory Standard
Voltage:	460 V	**Height x Width x Depth:**	6.00 in x 6.00 in x 4.00 in
Mounting:	Door Side	**Enclosure:**	NEMA 3R

Door

Location	Drive Side Door Width	Opp. Drv. Side Door Width	Opening
Both sides	20 in	28 in	Outward

Unit Sound Power (dB)

Type	63 Hz	125 Hz	250 Hz	500 Hz	1000 Hz	2000 Hz	4000 Hz	8000 Hz
Radiated:	66	69	56	52	53	43	46	51
Unit Discharge:	76	79	74	73	75	71	70	67
Unit Return:	66	69	56	56	58	54	50	51

Shipping Section Details

Section	Length in	Weight lb	Corner Weights (lb)				Center of Gravity (in)		
			P1	P2	P3	P4	XX	YY	ZZ
1	104	1785	573	209	358	722	60	15	19
2	36	582	155	127	136	164	19	23	18
Entire Unit	**140**	**2367**	**762**	**370**	**460**	**852**	**75**	**17**	**19**

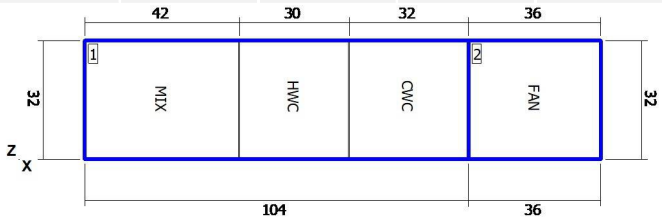

Elevation View

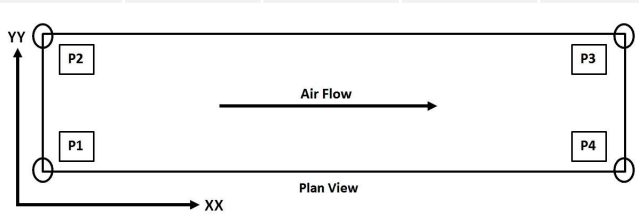

NOTE: Piping vestibule shipping section length(s) not included in the total shipping section length.

NOTE: Piping vestibule(s) are shipped attached to the coil section(s).

NOTE: Special components aren't included in the corner weights and center of gravity data.

NOTE: Shipping weights listed do not include weight of water (listed in coil section(s) above.

Shipping Protection	None

Supply Static Pressure Drop

Component	Option	Static Pressure Drop
Mixing Box	Filter	0.53 insWg
Mixing Box	Mixing Box	0.05 insWg
Hot Water Coil	Hot Water Coil	0.05 insWg
Chilled Water coil	Chilled Water coil	0.62 insWg
Supply Fan	Cabinet	
External Static	External Static	0.60 insWg
Total Supply Fan Static		1.85 insWg

Minimum Recommended Drain Pan Trap Dimensions

Shipping Section	Component	H
1	Chilled Water coil	3.00

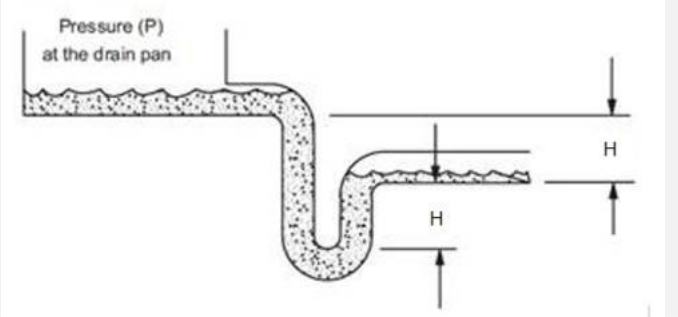

Dimensions provided as a courtesy and are recommended minimums only. Daikin is not responsible for supplying or designing drain pan traps and is not responsible for any damage caused by incorrect trap heights. The dimensions listed above should be reviewed and approved by a licensed plumbing professional.

This calculation is based on an assumption that 0.25 inches of the external static pressure is in the return duct and the remainder is in the supply duct. If actual conditions vary from this assumption then contact Applications for new trap height recommendations.

AHRI Certification

Certified by the AHRI Central Station Air-Handling Unit (AHU) Certification Program, which is based on AHRI Standard 430/431. AHRI certified units are subject to rigorous and continuous testing, have performance ratings independently measured and are third-party verified. Certified units may be found in the AHRI Directory at www.ahridirectory.org.

Notes

Standard
1. As a standalone component, unit meets or exceeds requirements of ASHRAE 90.1 - 2007. The approving authority is responsible for compliance of multi - component building systems.

BQZQ3P

Klein ISD Eiland ES AHU re

48

1/16/2026

OAHU-4 (Eiland)

Drawing

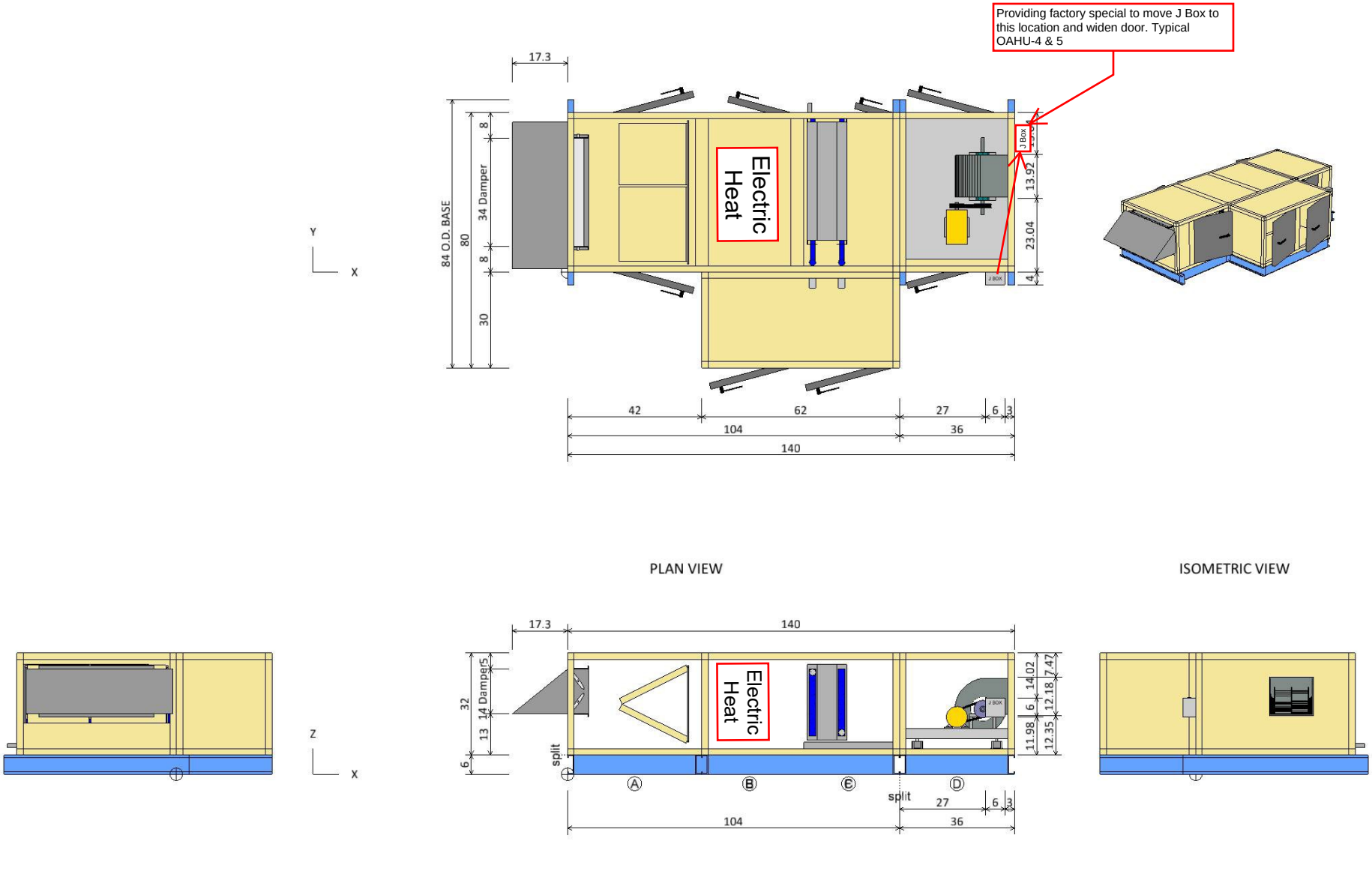

Plan/Elevation	Unit Tag: OAHU-4 (Eiland)			Sales Office: HTS Texas		
Product: Skyline Air Handler	Project Name: Klein ISD Eiland ES AHU replacements			Sales Engineer:		
Model: OAH006GDAM	Jan. 16, 2026	Ver/Rev:	Sheet: 1 of 1	Scale: NTS	Tolerance: +/-0.25"	Dwg Units: in

DAIKIN
13600 Industrial Park Blvd, Minneapolis, MN 55441
www.DaikinApplied.com Software Version: 13.91

All opening dimensions have a 1" mounting flange along the inner edge. The actual airflow area of the opening is 2" smaller in each dimension.

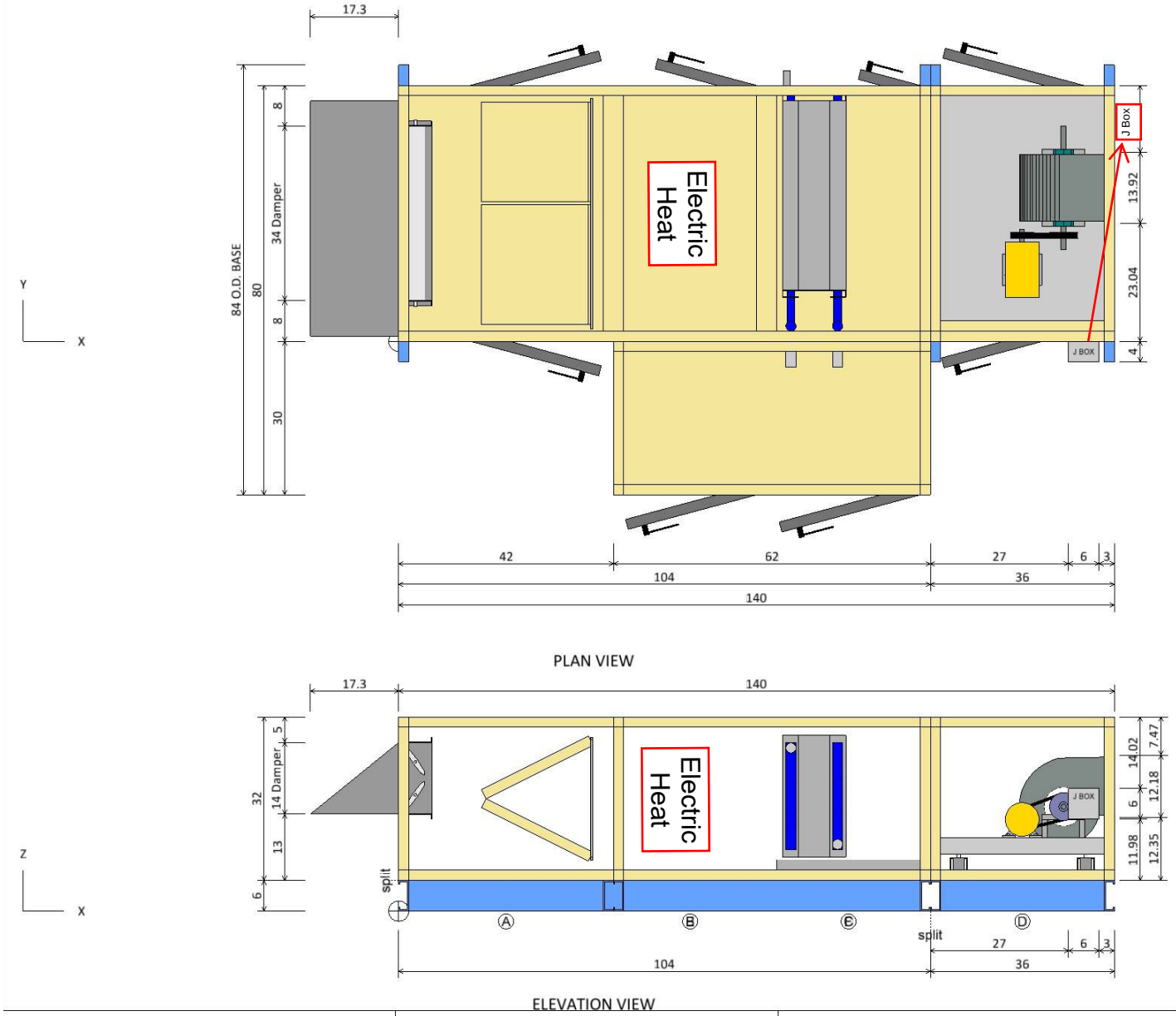

Component Key		
Ⓐ	Mixing Box	
	Filter Type:	Pre Pleat M13
	Right Door (WxH):	26 ins x 28 ins
	Left Door (WxH):	26 ins x 28 ins
Ⓑ	Hot Water Coil	
	Coil Model:	5WH0001C
	Total Capacity:	0.0 Btu/hr
	Left Door (WxH):	20 ins x 24 ins
Ⓒ	Chilled Water coil	
	Coil Model:	5WL1108B
	Total Capacity:	179934.0 Btu/hr
	Left Door (WxH):	12 ins x 22 ins
Ⓓ	Supply Fan	
	Fan Type:	Centrifugal DWDI
	Fan Size (Class):	10 (2)
	Air Flowrate:	1900.0 cfm
	T.S.P:	1.9 insWg
	Motor Power:	2.0 HP
	Right Door (WxH):	20 ins x 28 ins
	Left Door (WxH):	28 ins x 28 ins
Ⓔ	Vestibule Section	
	Right Door (WxH):	26 ins x 28 ins
Ⓕ	Vestibule Section	
	Right Door (WxH):	28 ins x 28 ins

Opening dimensions shown are for unit only, refer to curb drawing for duct opening dimensions.

Roof panels add 2 inches to total unit height.

Plan/Elevation - No Ends	Unit Tag: OAHU-4 (Eiland)			Sales Office: HTS Texas		
Product: Skyline Air Handler	Project Name: Klein ISD Eiland ES AHU replacements			Sales Engineer:		
Model: OAH006GDAM	Jan. 16, 2026	Ver/Rev:	Sheet: 1 of 1	Scale: NTS	Tolerance: +/-0.25"	Dwg Units: in

DAIKIN
13600 Industrial Park Blvd, Minneapolis, MN 55441
www.DaikinApplied.com Software Version: 13.91

All opening dimensions have a 1" mounting flange along the inner edge. The actual airflow area of the opening is 2" smaller in each dimension.

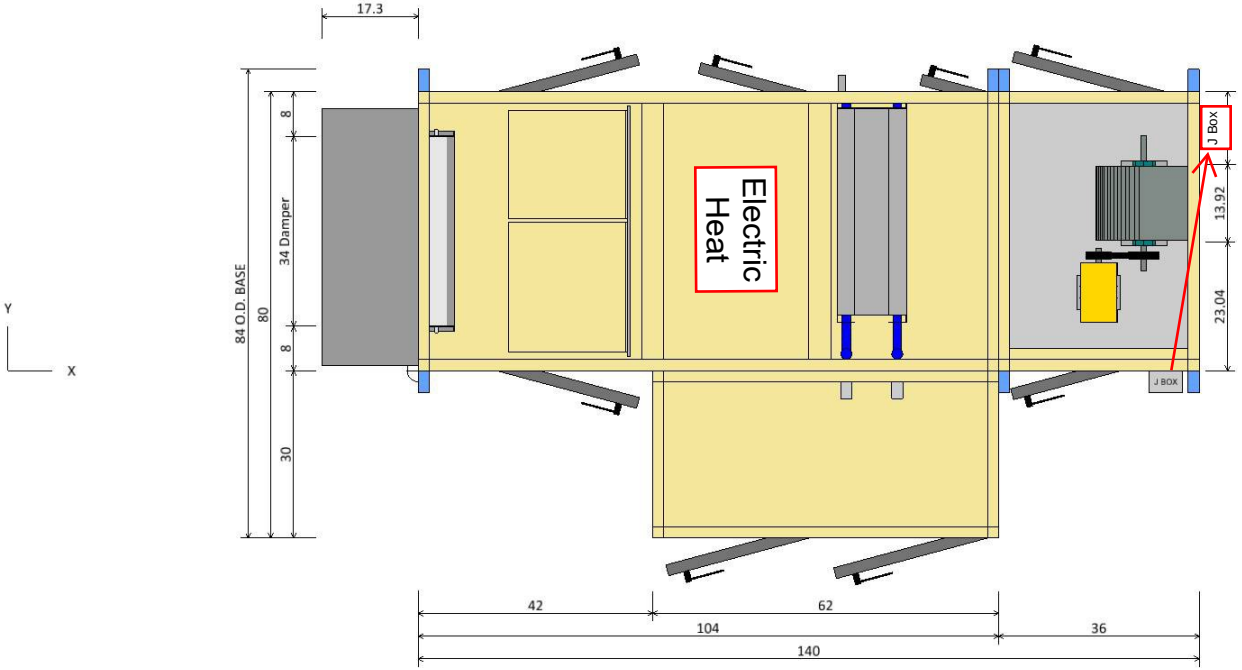

PLAN VIEW

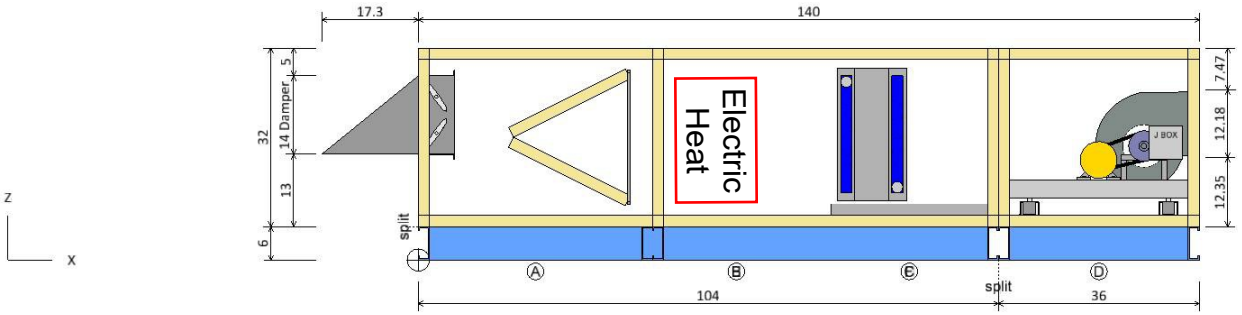

ELEVATION VIEW

Component Key

	Type	X	Y	Z	Wid	Hgt
Ⓐ	Mixing Box Outside air damper	0.00	2.00	16.00	46.00	20.00
Ⓓ	Supply Fan Fan Discharge	140.00	23.04	18.35	13.92	12.18

Opening dimensions shown are for unit only, refer to curb drawing for duct opening dimensions.

Roof panels add 2 inches to total unit height.

Note: Dimensions are measured from the origin point.
Note: Openings with or without dampers are recessed into the unit by approximately 1.75 in.

Opening/Damper Connections	Unit Tag: OAHU-4 (Eiland)			Sales Office: HTS Texas		
Product: Skyline Air Handler	Project Name: Klein ISD Eiland ES AHU replacements			Sales Engineer:		
Model: OAH006GDAM	Jan. 16, 2026	Ver/Rev:	Sheet: 1 of 1	Scale: NTS	Tolerance: +/-0.25"	Dwg Units: in

DAIKIN
13600 Industrial Park Blvd, Minneapolis, MN 55441
www.DaikinApplied.com Software Version: 13.91

All opening dimensions have a 1" mounting flange along the inner edge. The actual airflow area of the opening is 2" smaller in each dimension.

BQZQ3P

Klein ISD Eiland ES AHU re

51

1/16/2026

OAHU-4 (Eiland)

Drawing

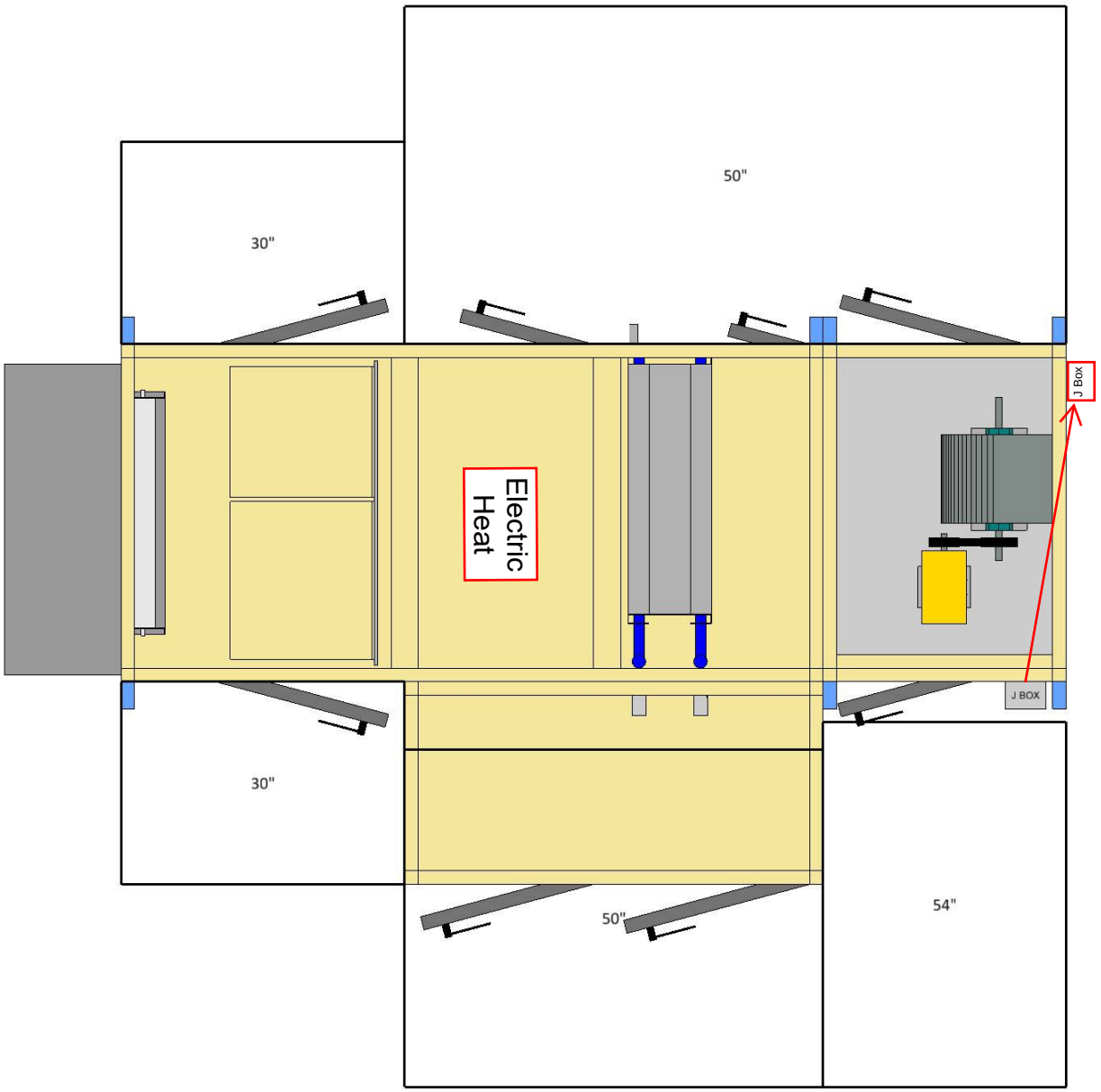

PLAN VIEW

Notes

Check local electrical component service clearance codes for specific distances.

Access is only required on one side of the unit.

Service Clearance View	Unit Tag: OAHU-4 (Eiland)			Sales Office: HTS Texas		
Product: Skyline Air Handler	Project Name: Klein ISD Eiland ES AHU replacements			Sales Engineer:		
Model: OAH006GDAM	Jan. 16, 2026	Ver/Rev:	Sheet: 1 of 1	Scale: NTS	Tolerance: +/-0.25"	Dwg Units: in

DAIKIN
13600 Industrial Park Blvd, Minneapolis, MN 55441
www.DaikinApplied.com Software Version: 13.91

All opening dimensions have a 1" mounting flange along the inner edge. The actual airflow area of the opening is 2" smaller in each dimension.

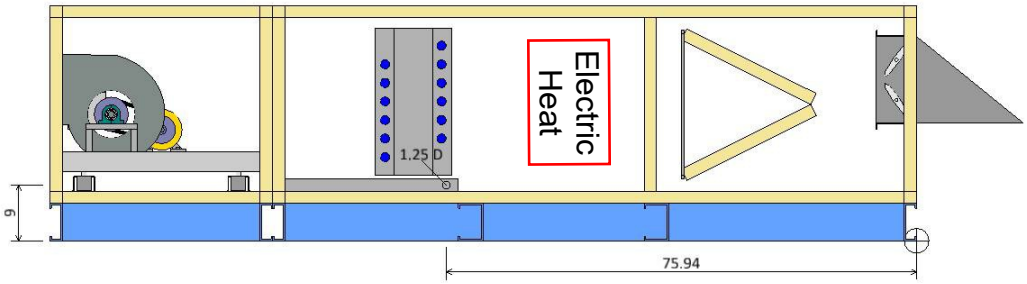

LEFT ELEVATION VIEW

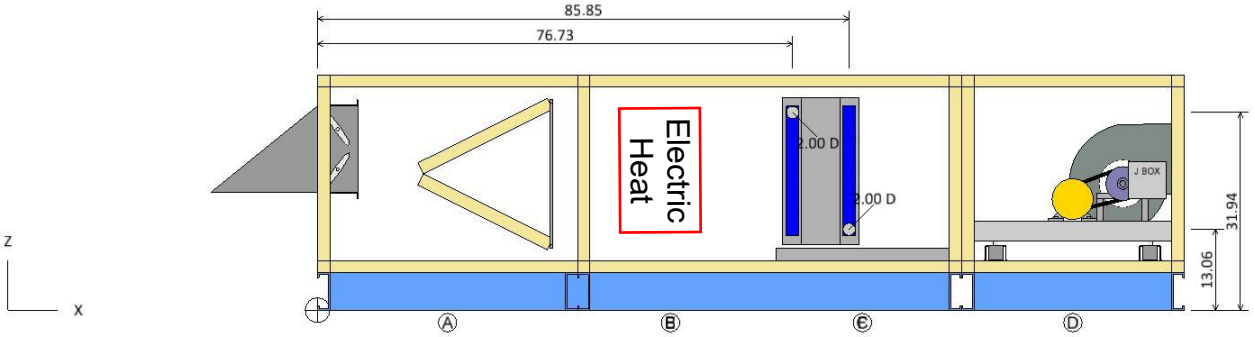

RIGHT ELEVATION VIEW

Coil and Drain Connections

	Type	X	Y	Z	Diam
Ⓒ	Chilled Water coil Condensate drain conn:	75.94	52.90	9.00	1.25
	Cold water inlet:	85.85	-7.00*	13.06	2.00
	Cold water outlet:	76.73	-7.00*	31.94	2.00

Roof panels add 2 inches to total unit height.

Notes:
Dimensions are measured from the origin point.
* value varies +/- 1 in.

Coil and Drain Connections	Unit Tag: OAHU-4 (Eiland)			Sales Office: HTS Texas		
Product: Skyline Air Handler	Project Name: Klein ISD Eiland ES AHU replacements			Sales Engineer:		
Model: OAH006GDAM	Jan. 16, 2026	Ver/Rev:	Sheet: 1 of 1	Scale: NTS	Tolerance: +/-0.25"	Dwg Units: in

DAIKIN
13600 Industrial Park Blvd, Minneapolis, MN 55441
www.DaikinApplied.com Software Version: 13.91

All opening dimensions have a 1" mounting flange along the inner edge. The actual airflow area of the opening is 2" smaller in each dimension.

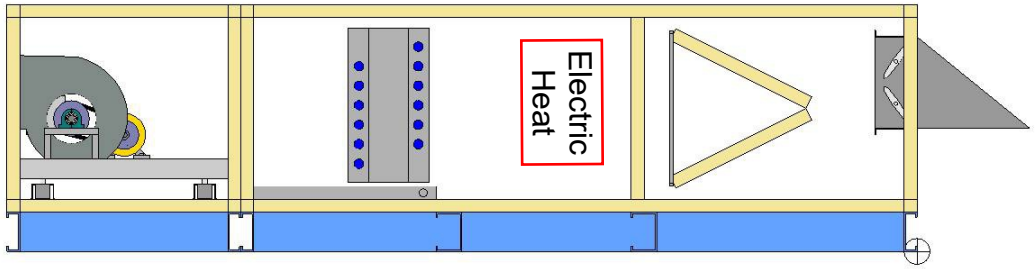

LEFT ELEVATION VIEW

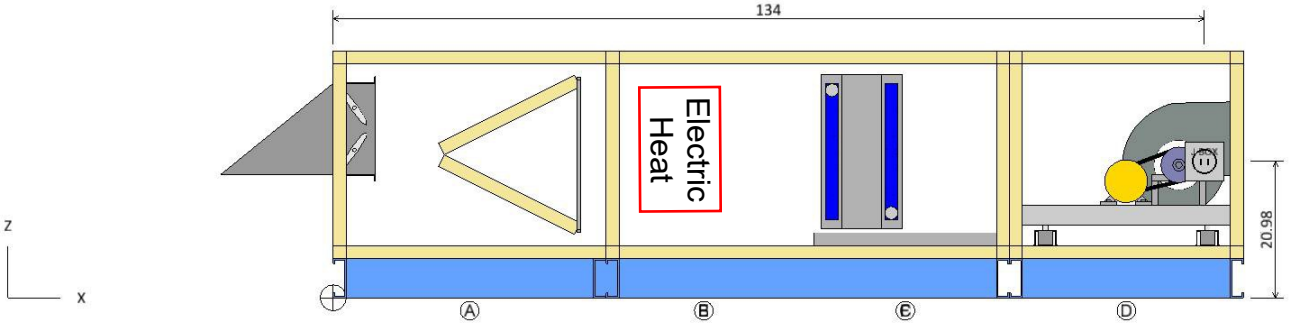

RIGHT ELEVATION VIEW

Component Key

	Type	X	Y	Z	Volts	Phase
Ⓓ	Supply Fan Fan	134.00	0.00	20.98	460	3

Roof panels add 2 inches to total unit height.

Note: Dimensions are measured from the origin point.

Electrical Connections	Unit Tag: OAHU-4 (Eiland)			Sales Office: HTS Texas		
Product: Skyline Air Handler	Project Name: Klein ISD Eiland ES AHU replacements			Sales Engineer:		
Model: OAH006GDAM	Jan. 16, 2026	Ver/Rev:	Sheet: 1 of 1	Scale: NTS	Tolerance: +/-0.25"	Dwg Units: in

DAIKIN
13600 Industrial Park Blvd, Minneapolis, MN 55441
www.DaikinApplied.com Software Version: 13.91

All opening dimensions have a 1" mounting flange along the inner edge. The actual airflow area of the opening is 2" smaller in each dimension.

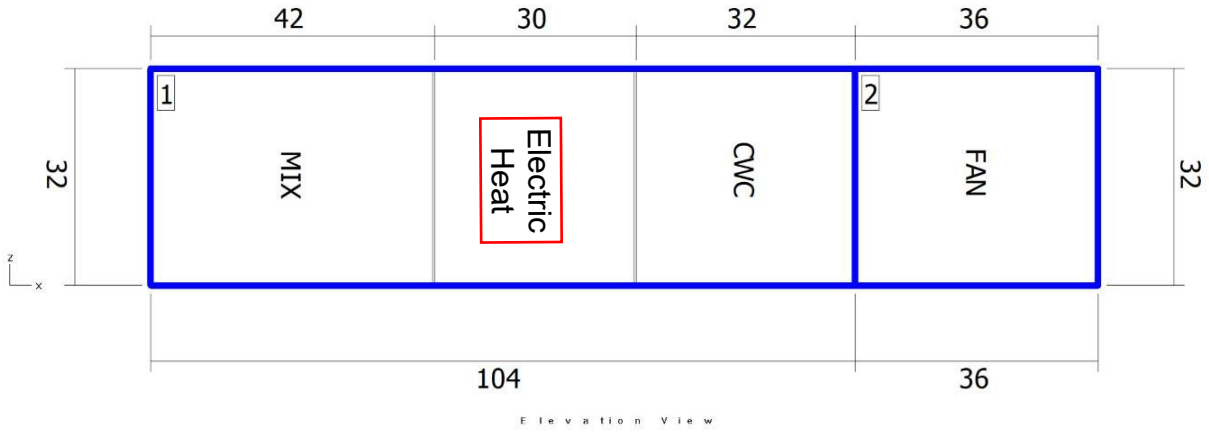

Elevation View

Shipping Sections

Section	Weight (lb)	X	Y	Z
Section 1	1785.21	104	50	32
Section 2	582.29	36	50	32
Total Unit	2367.50	140	80	32

Note: Base rails, curb ready base, coil connectors, drain connectors, and control boxes not included in height X, Y, Z dimensions. Shipping section may be 2" longer in air flow direction due to internal splice joint.

Shipping Sections	Unit Tag: OAHU-4 (Eiland)			Sales Office: HTS Texas		
Product: Skyline Air Handler	Project Name: Klein ISD Eiland ES AHU replacements			Sales Engineer:		
Model: OAH006GDAM	Jan. 16, 2026	Ver/Rev:	Sheet: 1 of 1	Scale: NTS	Tolerance: +/-0.25"	Dwg Units: in

DAIKIN
13600 Industrial Park Blvd, Minneapolis, MN 55441
www.DaikinApplied.com Software Version: 13.91

All opening dimensions have a 1" mounting flange along the inner edge. The actual airflow area of the opening is 2" smaller in each dimension.

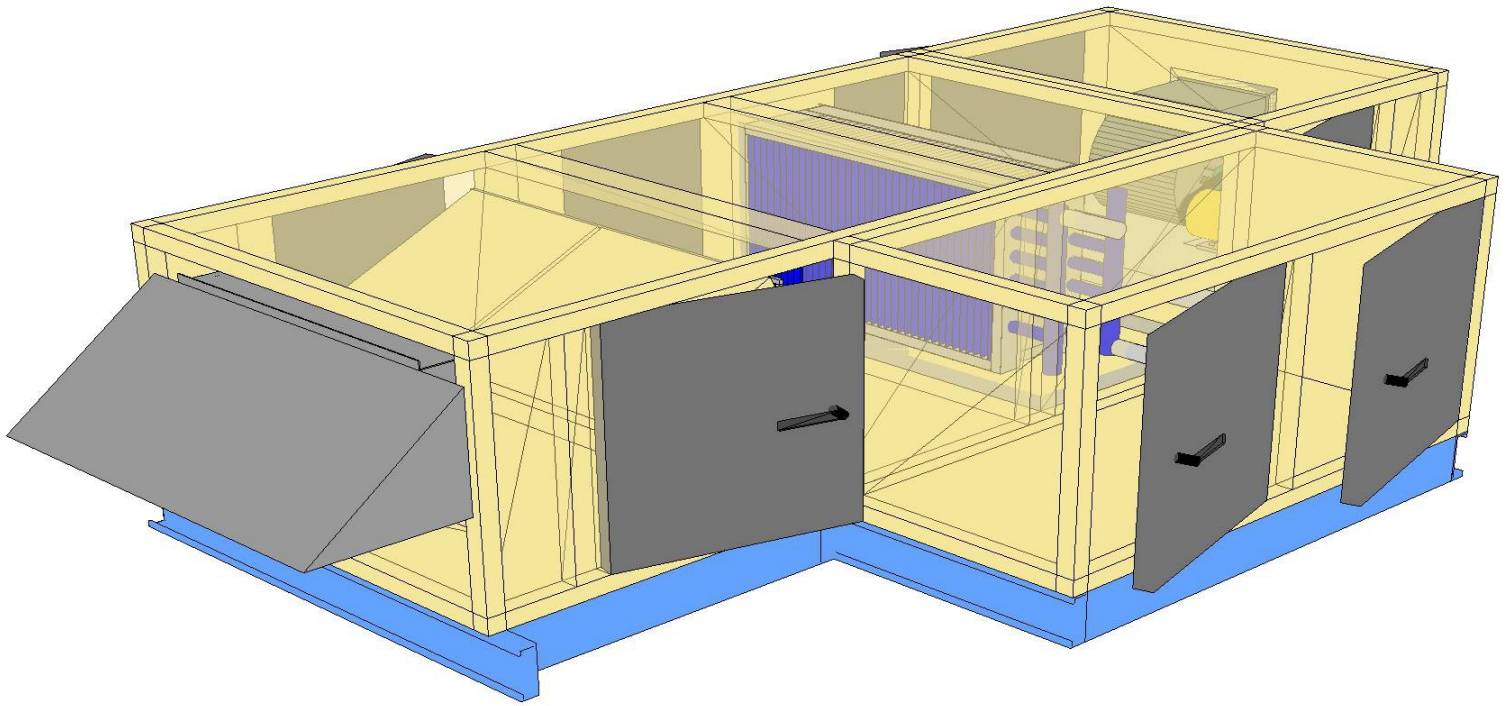

Product Drawing	Unit Tag: OAHU-4 (Eiland)			Sales Office: HTS Texas			DAIKIN
Product: Skyline Air Handler	Project Name: Klein ISD Eiland ES AHU replacements			Sales Engineer:			13600 Industrial Park Blvd, Minneapolis, MN 55441
Model: OAH006GDAM	Jan. 16, 2026	Ver/Rev:	Sheet: 1 of 1	Scale: NTS	Tolerance: +/-0.25"	Dwg Units: in	www.DaikinApplied.com Software Version: 13.91

All opening dimensions have a 1" mounting flange along the inner edge. The actual airflow area of the opening is 2" smaller in each dimension.

Daikin AHU Fan Curve

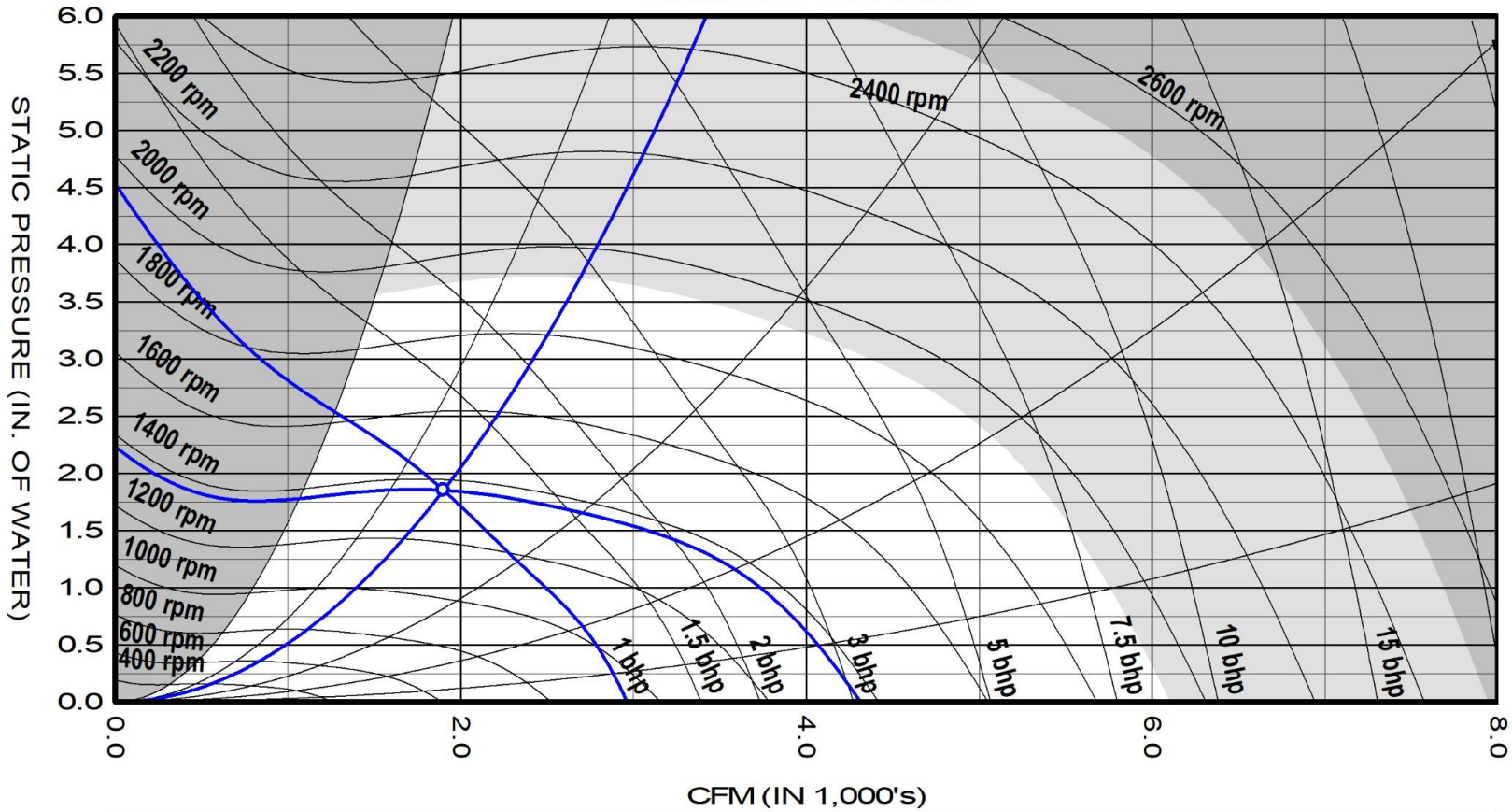

10.62" Forward Curved Supply Fan at Standard Conditions					
Air volume	1900	cfm	Fan speed	1367	rpm
Total static	1.85	insWg	Max speed	2518	rpm
Fan Shaft Power	1.0	bhp	Efficiency	55.3	%
Fan Energy Index(FEI)	1.15				
Unit tagging	OAHU-4 (Eiland)		Date	January-16-2026	
Job name	Klein ISD Eiland ES AHU replacements		Time	17:04	

Supply fan performance is certified in accordance with the Central Station Air-Handling Unit Certification Program, which is based on AHRI Standard 430.

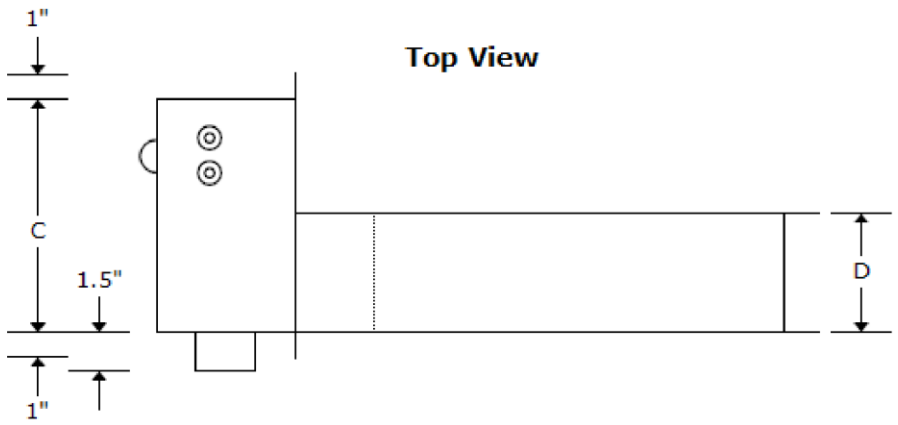

Notes

Nema 1

Horizontal Flow

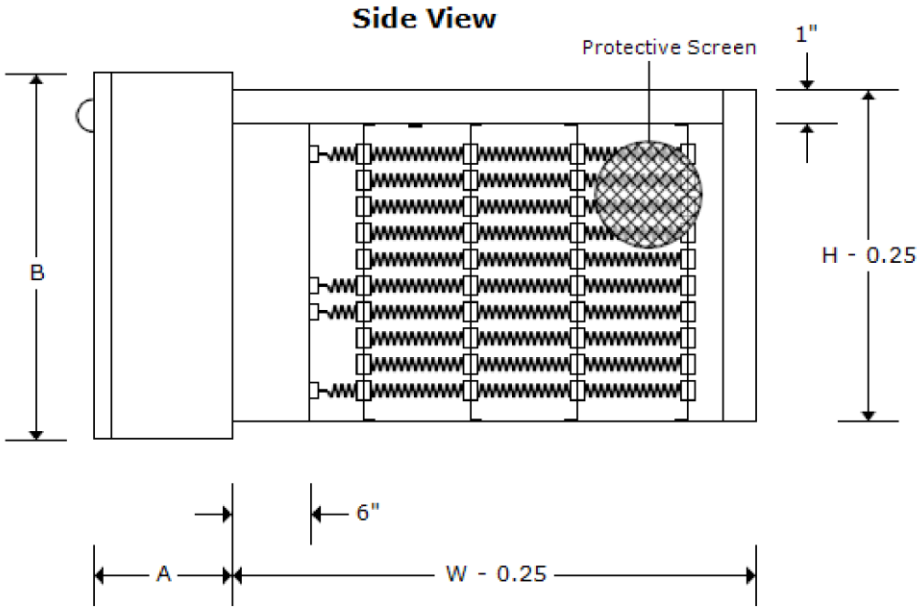

Neptronic 400 Lebeau, Montreal (QC) H4N 1R6 Tel:(514)333-1433

Proprietary Information: This document contains proprietary information and is property of Neptronic. This document and the information it contains shall not be duplicated or used in whole or in part without express written consent of Neptronic.

Mechanical Drawing
M253370024-D

Project #: 253370024
Nom Projet: Klein ISD Eiland ES - 2025 FRP
Customer Name:

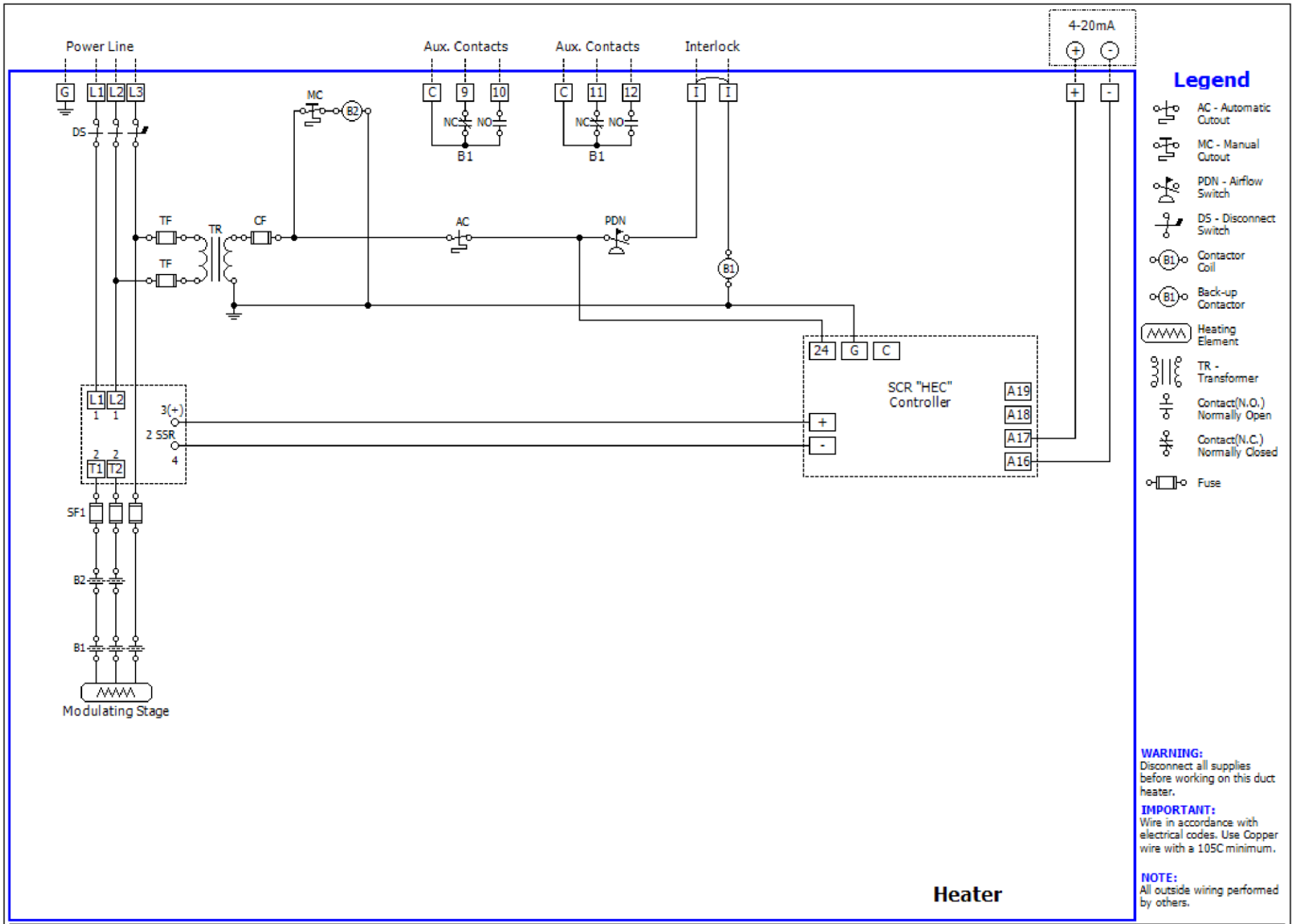

Neptronic 400 Lebeau, Montreal (QC) H4N 1R6 Tel:(514)333-1433

Proprietary Information: this document contains proprietary information & is property of Neptronic. This Document and the information it contains shall not be duplicated or used in whole or in part without the express consent of Neptronic.

ELECTRICAL DRAWING

E253370024-C

Project Number: 253370024

Project Name: Klein ISD Eiland ES - 2025 FRP

Customer Name:

Job Information	Technical Data Sheet
Job Name	Klein ISD Eiland ES AHU replacements
Date	January 16 2026
Submitted By	Salas O'Brien
Software Version	13.91
Unit Tag	OAHU-5 (Eiland)

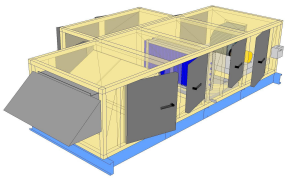

Unit Overview

Model Number	Supply					
	Air Volume cfm	Static Pressure		External Dimensions		
		External inWc	Total inWc	Height in	Width in	Length in
OAH006GDAM	1400	0.60	1.83	32*	50*	142

**Not including base rails, coil connectors, drain connectors, vestibule sections, control boxes and hoods.*

Unit

Model Number:	OAH006GDAM		
Approval:	ETL Listed / ETL Listed to Canadian Safety Standards (ETL Label / ETLc Label)		
Outer Panel:	Painted 18 gauge G60 Galvanized Steel (3000 hr. Salt Spray ASTM B-117)		
Liner:	24 gauge Galvanized Steel (unless noted per section)		
Insulation:	R-13 Injected Foam		
Unit Configuration:	Inline horizontal	**Drive (Handling) Location:**	Right
Base:	Curb ready	**Wall Thickness:**	2 in
Roof Curb Kit:	None	**Altitude:**	0 ft
Parts Warranty:	Additional One Year, Two Year Total		

Mixing Box

Component: 1 | Length: 42 in | Shipping Section: 1

Portion	Damper					Blade Action	Rated CFM	Air Pressure Drop	Quantity	Hoods
	Size (Width x Height)		Location	Type	Actuation					
	Overall	Opening								
Outside Air	46 in x 20 in	34 in x 14 in	End	Ruskin CD60	NA	Opposed	1400 cfm	0.03 insWg	1	Fitted - Field installed
Return Air	No opening	No opening		None		None	1400 cfm		0	

Filter Data

Type	Efficiency	Nominal Face Velocity	Actual Face Velocity	Actual Face Area	Air Volume	Filter Loading
Pre Pleat	MERV 13	95 ft/min	101 ft/min	13.9 ft²	1400 cfm	Side

Air Pressure Drop				Number of Filters	Height	Width	Depth
Clean Air	Mean Air	Dirty Air	User Spec				
0.04 inWc	**0.52** inWc	1.00 inWc	N/A	2	24 in	24 in	2 in
				2	24 in	20 in	2 in

Door

Location	Drive Side Door Width	Opp. Drv. Side Door Width	Opening
Both sides	26 in	26 in	Outward

Electric Heater	Component: 2	Length: 34 in	Shipping Section: 1

Voltage	Control Type	Temperature Control	Control Signal	Pressure Drop	kW	FLA	Steps	Disconnect		Free Air Velocity ft/min
480	SCR	Yes	4 - 20mA	0.05	18	22.59	N/A	Yes		300

Notes

This component section includes equipment that is a potential source of ignition in conjunction with A2L refrigerants. Refer to relevant IOM's regarding proper interlock with required refrigeration detection systems.

Special Options

Sound Baffle

(As casing details)

Chilled Water Coil	Component: 3	Length: 34 in	Shipping Section: 1

Coil Model	Total Capacity	Sensible Capacity	Number of Coils	Number of Rows	Fins per Inch	Tube Diameter	Tube Spacing (Face x Row)
5WH1206C	133777 Btu/hr	70803 Btu/hr	1	6	12	0.625 in	1.50 in x 1.299 in

Coil Operating Weight	Coil Dry Weight
148 lb	113 lb

Air Volume	Air Temperature				Coil Air Pressure Drop	Finned Height	Finned Length	Face Area	Face Velocity
	Entering		Leaving						
	Dry Bulb	Wet Bulb	Dry Bulb	Wet Bulb					
1400 cfm	98.0 °F	79.0 °F	51.8 °F	51.6 °F	0.63 inWc	18 in	37 in	4.62 ft²	303 ft/min

Water

Entering	Leaving	Flow Rate	Pressure Drop	Velocity	Fluid Volume	Fluid Weight	Piping Vestibule
45.0 °F	56.6 °F	23.00 gpm	10.00 ftHd	4.10 ft/s	4.0 gal	35.00 lb	30 in

Connection [Data Per Coil]				Min. Fin Surface Temp.	Min. Tube Wall Surface Temp.	Fouling Factor
Type	Size	Location	Material			
Threaded	1.50 in	Opp drive side	Carbon steel	45.0 °F	45.0 °F	0.000

Material				Drain Pan	Drain Side
Fin	Tube	Header	Case		
Aluminum .0075 in	Copper .020 in	Copper	Stainless steel	Stainless steel	Drive side

AHRI 410 Certification

Certified in accordance with the AHRI Forced-Circulation Air-Cooling and Air-Heating Coils Certification Program which is based on AHRI Standard 410 within the Range of Standard Rating Conditions listed in Table 1 of the Standard. Certified units may be found in the AHRI Directory at www.ahridirectory.org

Door

Location	Width	Opening
Drive side	18 in	Outward

Door

Location	Width	Opening
Non-drive side	30 in	Outward

Supply Fan

Component: 4 | Length: 36 in | Shipping Section: 1

Fan Performance

Air Volume	Static Pressure			Fan Energy Index(FEI)	Total Input Power	Fan Shaft Power	Fan Wheel Speed		Outlet Velocity
	External	Total	Cabinet				Operating	Maximum	
1400 cfm	0.60 inWc	1.83 inWc	0.00 inWc	1.18	0.8 kW	0.73 BHP	1365 rpm	2518 rpm	1333 ft/min

Fan Data

Fan Type	Blade Type / Class	Quantity of Fans	Wheel Diameter	Number of Blades	Discharge	Motor Location
Centrifugal DWDI	Forward Curved / 2	1	10.62 in	N/A	Top horizontal	To Side of Fan

Motor Data

Power	Electrical Supply	Speed	Efficiency	Enclosure	Frame Size	Supplier	Number of Poles	Lock Rotor Current	Full Load Current
2.0 HP	460/60/3 V/Hz/Phase	1750 rpm	Premium	TEFC	145 T frame	Generic	4	23.83 A	2.90 A

Fan Options

Shaft Grounding Kit:	Provided	**Isolator Type:**	Spring

Drive Package Data*

Fan Sheave	Motor Sheave	Belt	Number of Belts	Actual Drive S.F.	Bearing Type
AK46H	AK34H	A27	2	1.11	Standard - L50 (200K)

**Daikin Applied reserves the right to provide a different but equivalent drive package*

VFD/Starter/Disconnect Data

Selection Type:	External J-Box	**Vendor:**	Factory Standard
Voltage:	460 V	**Height x Width x Depth:**	6.00 in x 6.00 in x 4.00 in
Mounting:	Door Side	**Enclosure:**	NEMA 3R

Door

Location	Drive Side Door Width	Opp. Drv. Side Door Width	Opening
Both sides	20 in	28 in	Outward

Unit Sound Power (dB)

Type	63 Hz	125 Hz	250 Hz	500 Hz	1000 Hz	2000 Hz	4000 Hz	8000 Hz
Radiated:	65	68	55	51	52	42	46	51
Unit Discharge:	75	78	73	72	74	70	69	66
Unit Return:	65	68	58	58	59	55	51	51

Shipping Section Details

Section	Length in	Weight lb	Corner Weights (lb)				Center of Gravity (in)		
			P1	P2	P3	P4	XX	YY	ZZ
1	142	2313	385	726	810	469	76	32	19
Entire Unit	**142**	**2313**	**385**	**726**	**810**	**469**	**76**	**32**	**19**

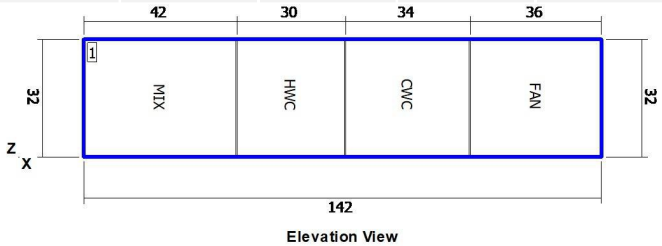

Elevation View

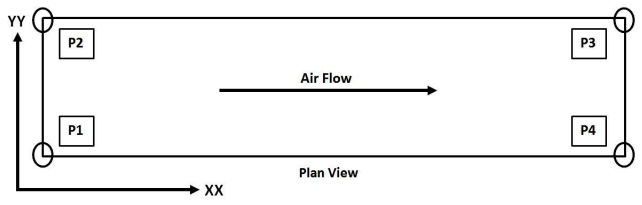

Plan View

NOTE: Piping vestibule shipping section length(s) not included in the total shipping section length.

NOTE: Piping vestibule(s) are shipped attached to the coil section(s).

NOTE: Special components aren't included in the corner weights and center of gravity data.

NOTE: Shipping weights listed do not include weight of water (listed in coil section(s) above.

Shipping Protection	None

Supply Static Pressure Drop

Component	Option	Static Pressure Drop
Mixing Box	Filter	0.52 insWg
Mixing Box	Mixing Box	0.03 insWg
Hot Water Coil	Hot Water Coil	0.05 insWg
Chilled Water coil	Chilled Water coil	0.63 insWg
Supply Fan	Cabinet	
External Static	External Static	0.60 insWg
Total Supply Fan Static		1.83 insWg

Minimum Recommended Drain Pan Trap Dimensions

Shipping Section	Component	H
1	Chilled Water coil	2.96

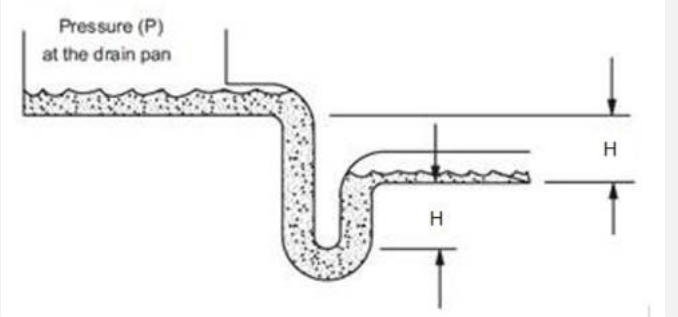

Dimensions provided as a courtesy and are recommended minimums only. Daikin is not responsible for supplying or designing drain pan traps and is not responsible for any damage caused by incorrect trap heights. The dimensions listed above should be reviewed and approved by a licensed plumbing professional.

This calculation is based on an assumption that 0.25 inches of the external static pressure is in the return duct and the remainder is in the supply duct. If actual conditions vary from this assumption then contact Applications for new trap height recommendations.

AHRI Certification

Certified by the AHRI Central Station Air-Handling Unit (AHU) Certification Program, which is based on AHRI Standard 430/431. AHRI certified units are subject to rigorous and continuous testing, have performance ratings independently measured and are third-party verified. Certified units may be found in the AHRI Directory at www.ahridirectory.org.

Notes

Standard
1. As a standalone component, unit meets or exceeds requirements of ASHRAE 90.1 - 2007. The approving authority is responsible for compliance of multi - component building systems.

BQZQ3P

Klein ISD Eiland ES AHU re

21

1/16/2026

OAHU-5 (Eiland)

Drawing

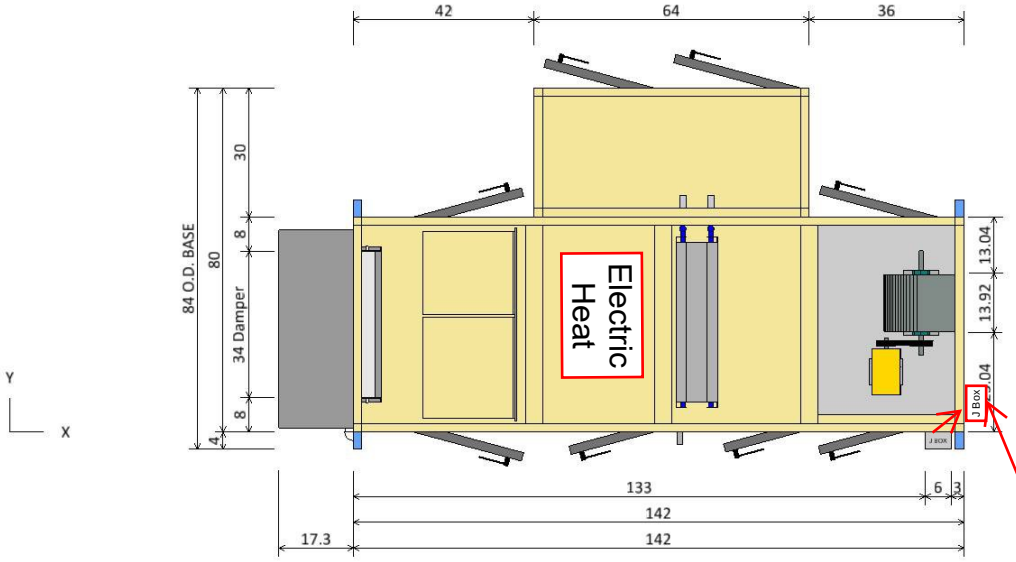

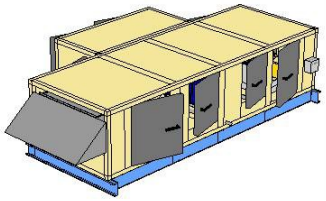

PLAN VIEW

ISOMETRIC VIEW

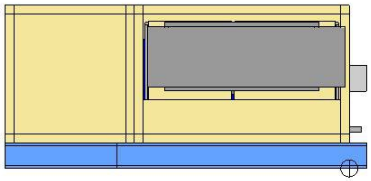

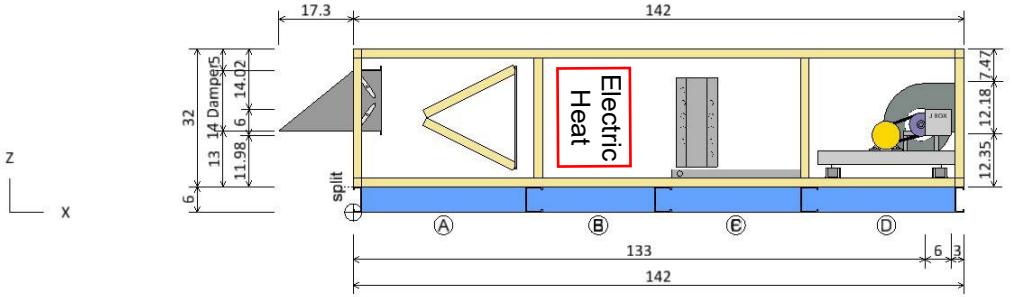

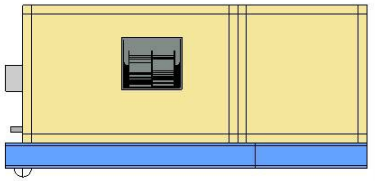

FRONT END VIEW

ELEVATION VIEW

REAR END VIEW

Plan/Elevation	Unit Tag: OAHU-5 (Eiland)			Sales Office: HTS Texas		
Product: Skyline Air Handler	Project Name: Klein ISD Eiland ES AHU replacements			Sales Engineer:		
Model: OAH006GDAM	Jan. 16, 2026	Ver/Rev:	Sheet: 1 of 1	Scale: NTS	Tolerance: +/-0.25"	Dwg Units: in

DAIKIN

13600 Industrial Park Blvd, Minneapolis, MN 55441

www.DaikinApplied.com Software Version: 13.91

All opening dimensions have a 1" mounting flange along the inner edge. The actual airflow area of the opening is 2" smaller in each dimension.

BQZQ3P

Klein ISD Eiland ES AHU re

22

1/16/2026

OAHU-5 (Eiland)

Drawing

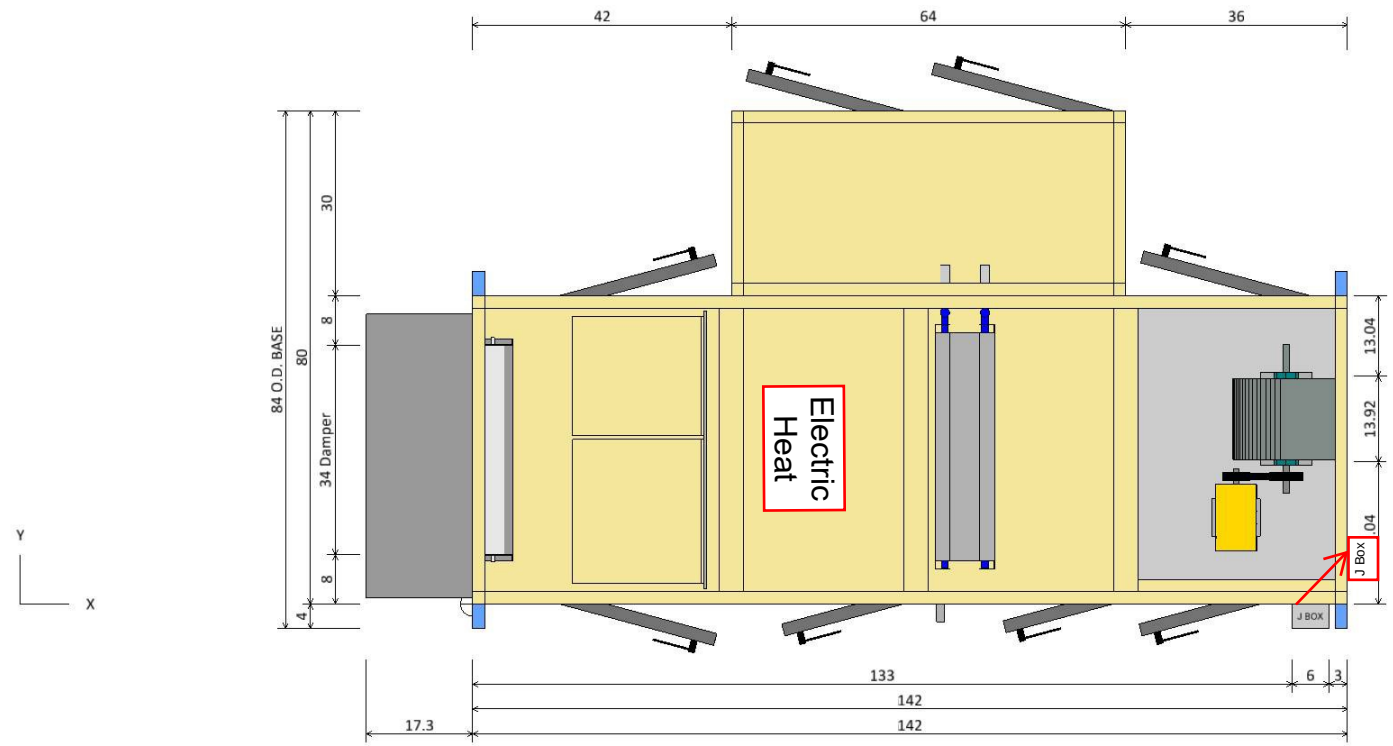

PLAN VIEW

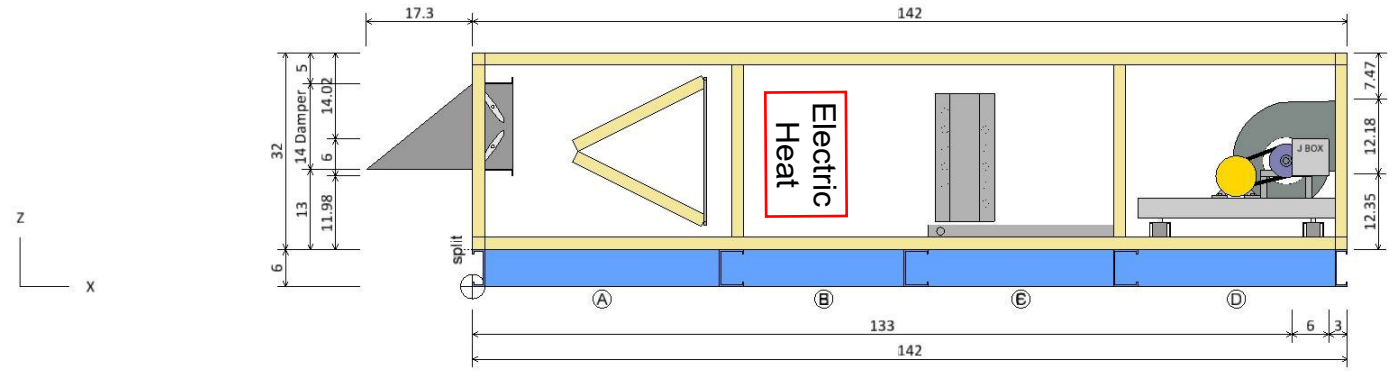

ELEVATION VIEW

Component Key		
Ⓐ	Mixing Box	
	Filter Type:	Pre Pleat M13
	Right Door (WxH):	26 ins x 28 ins
	Left Door (WxH):	26 ins x 28 ins
Ⓑ	Hot Water Coil	
	Coil Model:	5WH0001C
	Total Capacity:	0.0 Btu/hr
	Right Door (WxH):	20 ins x 24 ins
Ⓒ	Chilled Water coil	
	Coil Model:	5WH1206C
	Total Capacity:	133777.0 Btu/hr
	Right Door (WxH):	18 ins x 22 ins
Ⓓ	Supply Fan	
	Fan Type:	Centrifugal DWDI
	Fan Size (Class):	10 (2)
	Air Flowrate:	1400.0 cfm
	T.S.P:	1.8 insWg
	Motor Power:	2.0 HP
	Right Door (WxH):	20 ins x 28 ins
	Left Door (WxH):	28 ins x 28 ins
Ⓔ	Vestibule Section	
	Left Door (WxH):	26 ins x 28 ins
Ⓕ	Vestibule Section	
	Left Door (WxH):	30 ins x 28 ins

Opening dimensions shown are for unit only, refer to curb drawing for duct opening dimensions.

Roof panels add 2 inches to total unit height.

Plan/Elevation - No Ends	Unit Tag: OAHU-5 (Eiland)			Sales Office: HTS Texas		
Product: Skyline Air Handler	Project Name: Klein ISD Eiland ES AHU replacements			Sales Engineer:		
Model: OAH006GDAM	Jan. 16, 2026	Ver/Rev:	Sheet: 1 of 1	Scale: NTS	Tolerance: +/-0.25"	Dwg Units: in

DAIKIN
13600 Industrial Park Blvd, Minneapolis, MN 55441
www.DaikinApplied.com Software Version: 13.91

All opening dimensions have a 1" mounting flange along the inner edge. The actual airflow area of the opening is 2" smaller in each dimension.

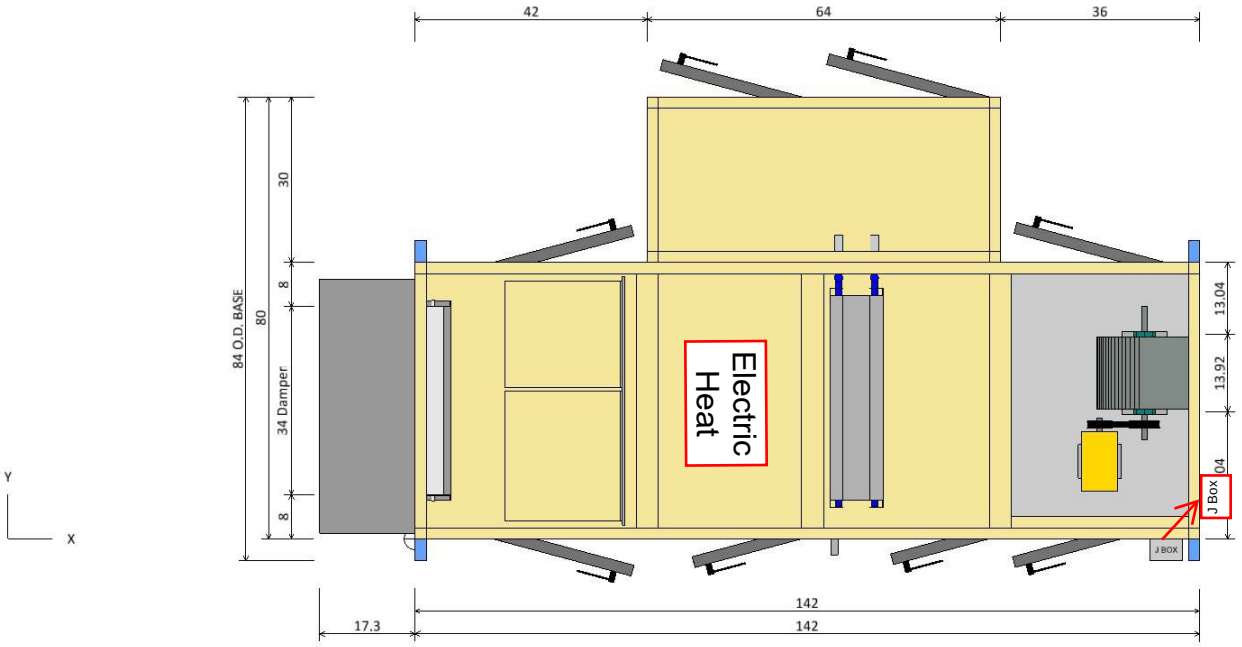

PLAN VIEW

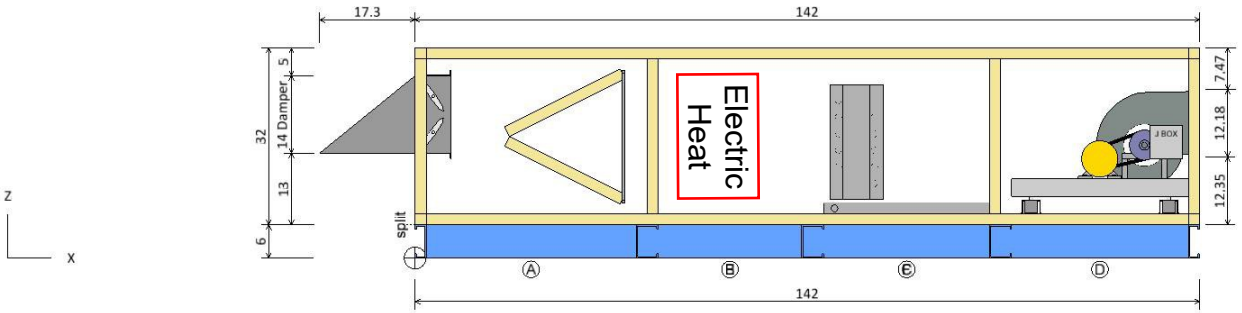

ELEVATION VIEW

Component Key

	Type	X	Y	Z	Wid	Hgt
Ⓐ	Mixing Box Outside air damper	0.00	2.00	16.00	46.00	20.00
Ⓓ	Supply Fan Fan Discharge	142.00	23.04	18.35	13.92	12.18

Opening dimensions shown are for unit only, refer to curb drawing for duct opening dimensions.

Roof panels add 2 inches to total unit height.

Note: Dimensions are measured from the origin point.
Note: Openings with or without dampers are recessed into the unit by approximately 1.75 in.

Opening/Damper Connections	Unit Tag: OAHU-5 (Eiland)			Sales Office: HTS Texas		
Product: Skyline Air Handler	Project Name: Klein ISD Eiland ES AHU replacements			Sales Engineer:		
Model: OAH006GDAM	Jan. 16, 2026	Ver/Rev:	Sheet: 1 of 1	Scale: NTS	Tolerance: +/-0.25"	Dwg Units: in

DAIKIN
13600 Industrial Park Blvd, Minneapolis, MN 55441
www.DaikinApplied.com Software Version: 13.91

All opening dimensions have a 1" mounting flange along the inner edge. The actual airflow area of the opening is 2" smaller in each dimension.

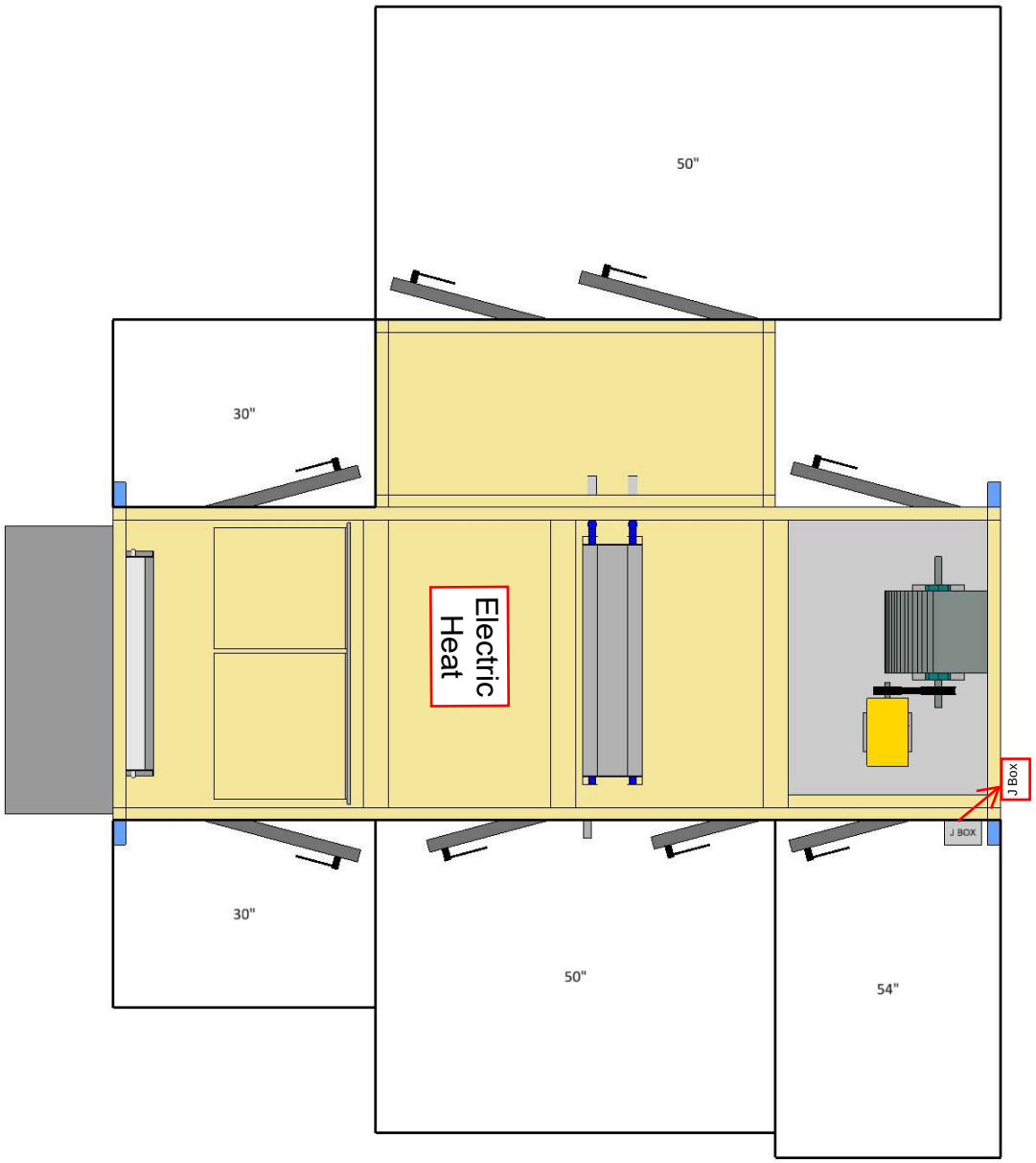

PLAN VIEW

Notes

Check local electrical component service clearance codes for specific distances.

Access is only required on one side of the unit.

Service Clearance View	Unit Tag: OAHU-5 (Eiland)			Sales Office: HTS Texas		
Product: Skyline Air Handler	Project Name: Klein ISD Eiland ES AHU replacements			Sales Engineer:		
Model: OAH006GDAM	Jan. 16, 2026	Ver/Rev:	Sheet: 1 of 1	Scale: NTS	Tolerance: +/-0.25"	Dwg Units: in

DAIKIN
13600 Industrial Park Blvd, Minneapolis, MN 55441
www.DaikinApplied.com Software Version: 13.91

All opening dimensions have a 1" mounting flange along the inner edge. The actual airflow area of the opening is 2" smaller in each dimension.

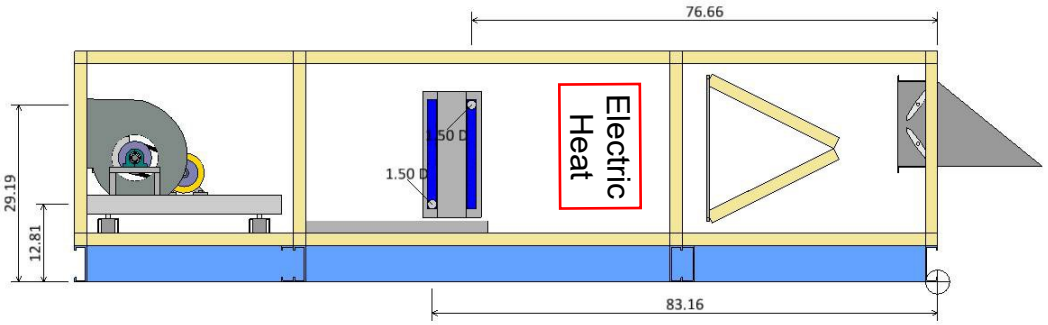

LEFT ELEVATION VIEW

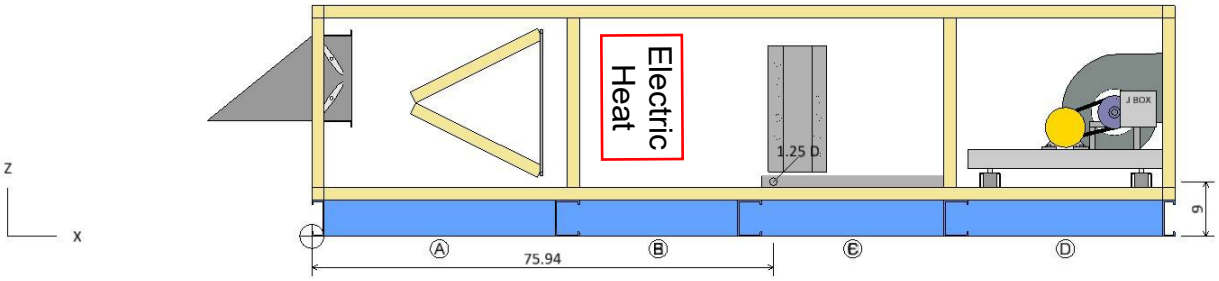

RIGHT ELEVATION VIEW

Coil and Drain Connections

	Type	X	Y	Z	Diam
Ⓒ	Chilled Water coil				
	Condensate drain conn:	75.94	-2.90	9.00	1.25
	Cold water inlet:	83.16	57.00*	12.81	1.50
	Cold water outlet:	76.66	57.00*	29.19	1.50

Roof panels add 2 inches to total unit height.

Notes:
Dimensions are measured from the origin point.
* value varies +/- 1 in.

Coil and Drain Connections	Unit Tag: OAHU-5 (Eiland)			Sales Office: HTS Texas		
Product: Skyline Air Handler	Project Name: Klein ISD Eiland ES AHU replacements			Sales Engineer:		
Model: OAH006GDAM	Jan. 16, 2026	Ver/Rev:	Sheet: 1 of 1	Scale: NTS	Tolerance: +/-0.25"	Dwg Units: in

DAIKIN
13600 Industrial Park Blvd, Minneapolis, MN 55441
www.DaikinApplied.com Software Version: 13.91

All opening dimensions have a 1" mounting flange along the inner edge. The actual airflow area of the opening is 2" smaller in each dimension.

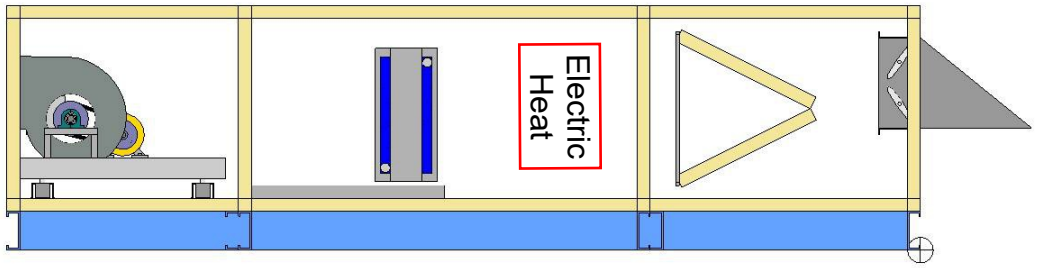

LEFT ELEVATION VIEW

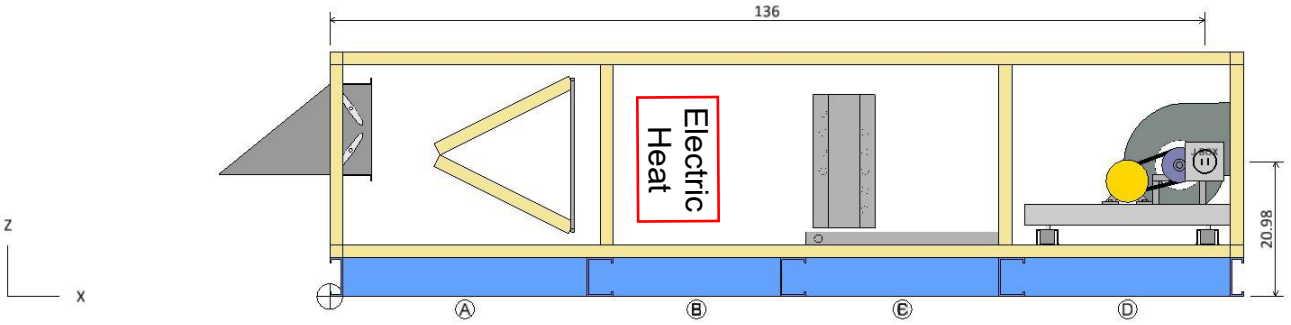

RIGHT ELEVATION VIEW

Component Key

	Type	X	Y	Z	Volts	Phase
Ⓓ	Supply Fan Fan	136.00	0.00	20.98	460	3

Roof panels add 2 inches to total unit height.

Note: Dimensions are measured from the origin point.

Electrical Connections	Unit Tag: OAHU-5 (Eiland)			Sales Office: HTS Texas		
Product: Skyline Air Handler	Project Name: Klein ISD Eiland ES AHU replacements			Sales Engineer:		
Model: OAH006GDAM	Jan. 16, 2026	Ver/Rev:	Sheet: 1 of 1	Scale: NTS	Tolerance: +/-0.25"	Dwg Units: in

DAIKIN
13600 Industrial Park Blvd, Minneapolis, MN 55441
www.DaikinApplied.com Software Version: 13.91

All opening dimensions have a 1" mounting flange along the inner edge. The actual airflow area of the opening is 2" smaller in each dimension.

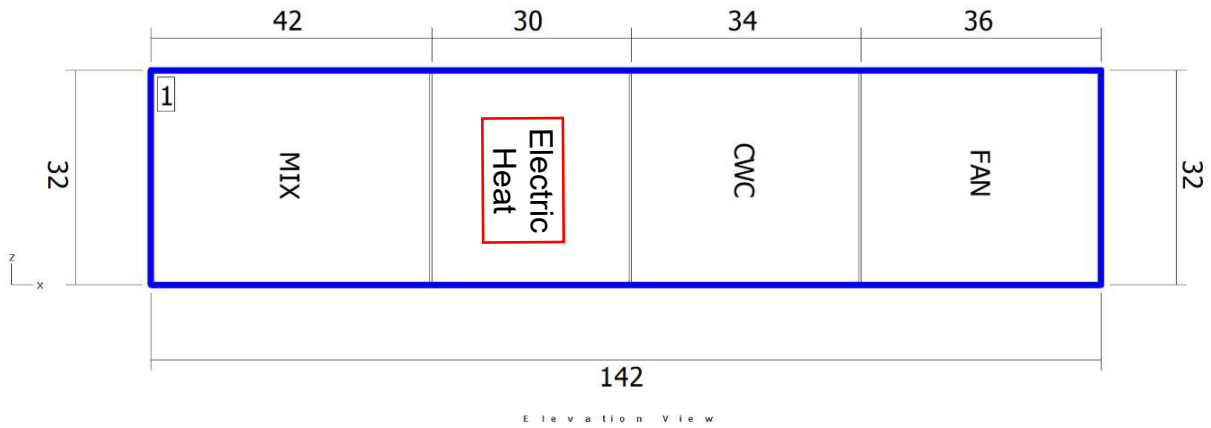

Elevation View

Shipping Sections

Section	Weight (lb)	X	Y	Z
Section 1	2312.89	142	50	32
Total Unit	2312.89	142	80	32

Note: Base rails, curb ready base, coil connectors, drain connectors, and control boxes not included in height X, Y, Z dimensions.
Shipping section may be 2" longer in air flow direction due to internal splice joint.

Shipping Sections	Unit Tag: OAHU-5 (Eiland)			Sales Office: HTS Texas		
Product: Skyline Air Handler	Project Name: Klein ISD Eiland ES AHU replacements			Sales Engineer:		
Model: OAH006GDAM	Jan. 16, 2026	Ver/Rev:	Sheet: 1 of 1	Scale: NTS	Tolerance: +/-0.25"	Dwg Units: in

DAIKIN
13600 Industrial Park Blvd, Minneapolis, MN 55441
www.DaikinApplied.com Software Version: 13.91

All opening dimensions have a 1" mounting flange along the inner edge. The actual airflow area of the opening is 2" smaller in each dimension.

Product Drawing	Unit Tag: OAHU-5 (Eiland)			Sales Office: HTS Texas		
Product: Skyline Air Handler	Project Name: Klein ISD Eiland ES AHU replacements			Sales Engineer:		
Model: OAH006GDAM	Jan. 16, 2026	Ver/Rev:	Sheet: 1 of 1	Scale: NTS	Tolerance: +/-0.25"	Dwg Units: in

DAIKIN
13600 Industrial Park Blvd, Minneapolis, MN 55441
www.DaikinApplied.com Software Version: 13.91

All opening dimensions have a 1" mounting flange along the inner edge. The actual airflow area of the opening is 2" smaller in each dimension.

Daikin AHU Fan Curve

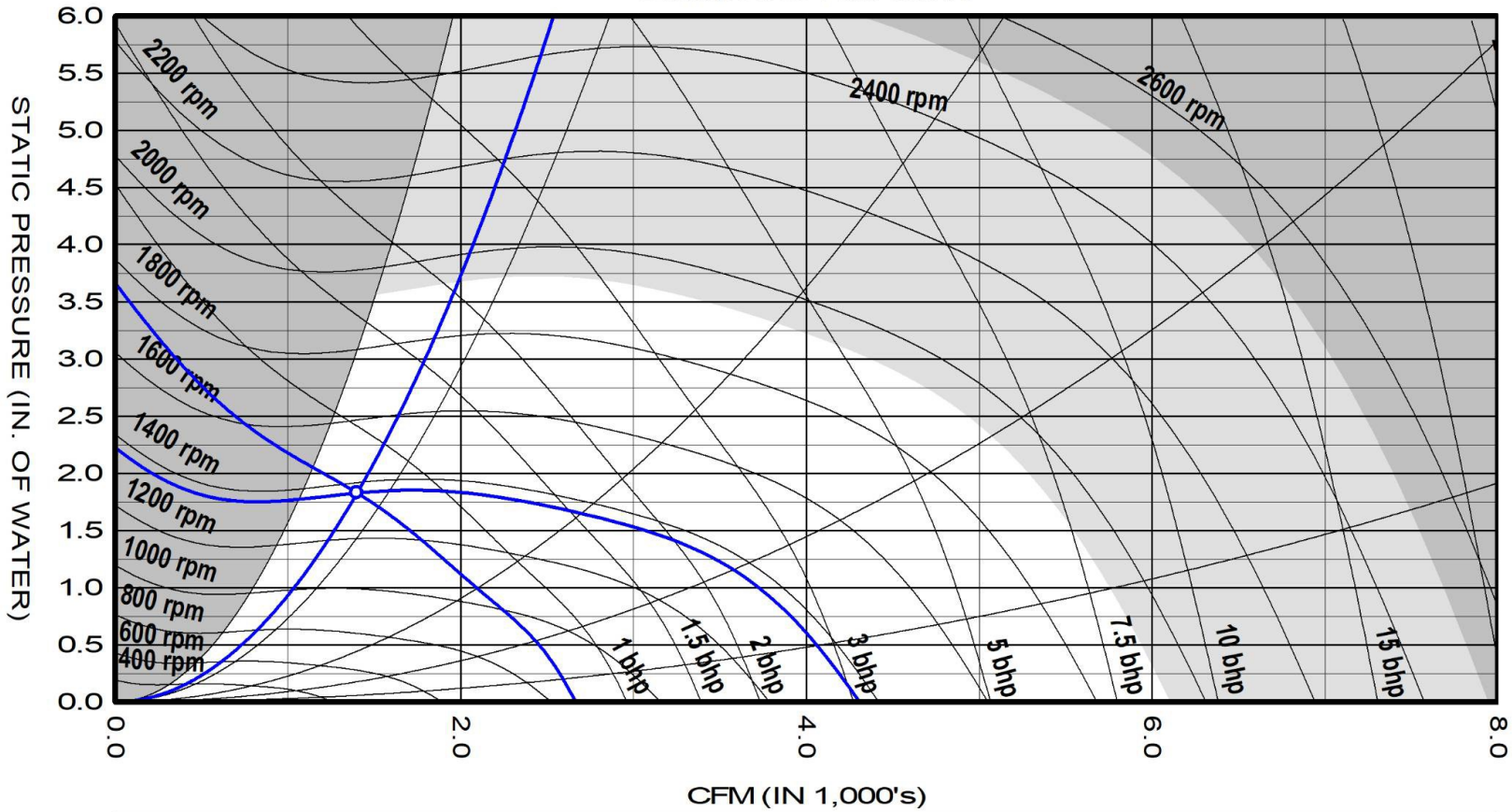

10.62" Forward Curved Supply Fan at Standard Conditions					
Air volume	1400	cfm	Fan speed	1365	rpm
Total static	1.83	insWg	Max speed	2518	rpm
Fan Shaft Power	0.7	bhp	Efficiency	55.3	%
Fan Energy Index(FEI)	1.18				

Unit tagging	OAHU-5 (Eiland)	Date	January-16-2026
Job name	Klein ISD Eiland ES AHU replacements	Time	19:00

Supply fan performance is certified in accordance with the Central Station Air-Handling Unit Certification Program, which is based on AHRI Standard 430.

Electric Duct Heater Schedule

#	Tag	Frame Dimensions		Airflow	Air Vel.	Electrical Section					Stages			Model	Options	Thermostats	Notes
		W	H	(CFM)	(FPM)	P(kW)	VAC-Ph	I(A)	Ctrl V	Signal	Qty	kW	A				
1	OAHU-1 & 5	36.00	24.00	1400	300	18	460-3	22.59	24	Mod	1X	18.00	22.59	DF CI11H	FC-CA-DS-AC-MC-TR-TF-CF-PDN-HEC-EAS-SSR-CGA-AUX(2)-N1-BLE-CC(8)	None	
2		36.00	24.00	1400	300	18	460-3	22.59	24	Mod	1X	18.00	22.59	DF CI11H	FC-CA-DS-AC-MC-TR-TF-CF-PDN-HEC-EAS-SSR-CGA-AUX(2)-N1-BLE-CC(8)	None	
3	OAHU-2	48.00	28.00	2000	303	25	460-3	31.38	24	Mod	1X	25.00	31.38	DF CI11H	FC-CA-DS-AC-MC-TR-TF-CF-PDN-HEC-EAS-SSR-CGA-AUX(2)-N1-BLE-CC(14)	None	
4	OAHU-3	54.00	30.00	3200	308	40	460-3	50.21	24	Mod	1X 1X	26.67 13.33	33.47 16.74	DF CI11H	FC-CA-SF-DS-AC-MC-TR-TF-CF-PDN-HEC-SSR-CGA-AUX(2)-N1-BLE-CC(4)	None	
5	OAHU-4	36.00	30.00	1900	304	24	460-3	30.12	24	Mod	1X	24.00	30.12	DF CI11H	FC-CA-SF-DS-AC-MC-TR-TF-CF-PDN-HEC-SSR-CGA-AUX(2)-N1-BLE-CC(6)	None	

Model Legend

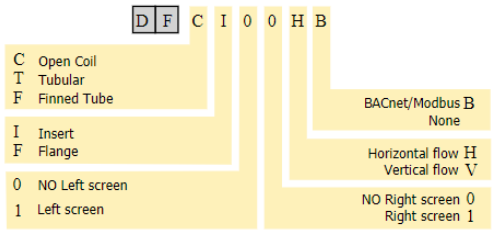

Components & Options Legend

AC	Automatic thermal cutout	HEC	Neptronic controller
AUX	Auxiliary Switch	MC	Manual thermal cutout
BLE	Control box with Left ext.	N1	Control Panel NEMA 1
CA	Magnetic contactor	PDN	P.D. Switch - fixed
CC	Cold spot on Control box side	SF	Stage fuse
CF	Control fuse	SSR	Solid-State Relay (TRIAC)
CGA	Coil Grade A (80% Nickel/20% Chrome)	TF	Transformer Fuse (primary)
DS	Disconnect switch	TR	Transformer
EAS	Electronic Airflow Sensors		
FC	Full break contactor		

Project Name	Klein ISD Eiland ES - 2025 FRP
Project Number	253370024
Project Revision	0
Manufacturer	Neptronic

neptronic
www.neptronic.com

400 Boulevard Lebeau
Montreal, QC, Canada, H4N 1R6
Tel 1-800-361-2308 or 1-514-333-1433, Fax 1-514-333-3163
Visit us at http://www.Neptronic.com

Listed (Duct Heater) 35 AU

C SP US

C ETL US

Duct Heater Approval Drawing

Heater(s) selected:5/5

Created	03 Dec, 2025	Rev.0
Last Modified	03 Dec, 2025	United States
Project Number	253370024	
Project Name	Klein ISD Eiland ES - 2025 FRP	
Reference Number		
Customer		
Engineer		
Submitted By	Erick Beltran	
Company	HTS Texas - Houston Office	

Duct Heaters			Dimensions (in)						CFM	FPM	Electrical Data					Stages			Drawings	Thermostats
			Heater			Control Box														
Item	Qty	Model (See Legend)	W	H	D	A	B	C			P (kW)	VAC-Ph	I (A)	Ctrl V	Signal	Qty	kW	A		
1	**Tag(s):** OAHU-1 & 5														MOD 4-20mA					
	2	DF CI11H	36.00	24.00	6.00	8.50	26.00	9.00	1400	300	18.00	460-3	22.59	24		1X	18.00	22.59	M253370024-A E253370024-A	None
	Elec. opts.: FC-CA-DS-AC-MC-TR-TF-CF-PDN-HEC-EAS-SSR-CGA-AUX(2) **Mech. opts.:** N1-BLE-CC(8)																			
2	**Tag(s):** OAHU-2														MOD 4-20mA					
	1	DF CI11H	48.00	28.00	6.00	8.50	30.00	8.00	2000	303	25.00	460-3	31.38	24		1X	25.00	31.38	M253370024-B E253370024-A	None
	Elec. opts.: FC-CA-DS-AC-MC-TR-TF-CF-PDN-HEC-EAS-SSR-CGA-AUX(2) **Mech. opts.:** N1-BLE-CC(14)																			
3	**Tag(s):** OAHU-3														MOD 4-20mA	1X 1X	26.67 13.33	33.47 16.74	M253370024-C E253370024-B	None
	1	DF CI11H	54.00	30.00	6.00	8.50	32.00	12.00	3200	308	40.00	460-3	50.21	24						
	Elec. opts.: FC-CA-SF-DS-AC-MC-TR-TF-CF-PDN-HEC-SSR-CGA-AUX(2) **Mech. opts.:** N1-BLE-CC(4)																			
4	**Tag(s):** OAHU-4														MOD 4-20mA	1X	24.00	30.12	M253370024-D E253370024-C	None
	1	DF CI11H	36.00	30.00	6.00	8.50	32.00	9.00	1900	304	24.00	460-3	30.12	24						
	Elec. opts.: FC-CA-SF-DS-AC-MC-TR-TF-CF-PDN-HEC-SSR-CGA-AUX(2) **Mech. opts.:** N1-BLE-CC(6)																			

Model Legend

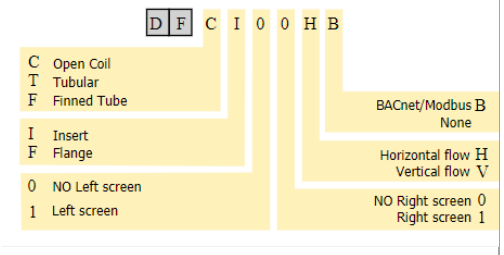

Components & Options Legend

AC	Automatic thermal cutout	HEC	Neptronic controller
AUX	Auxiliary Switch	MC	Manual thermal cutout
BLE	Control box with Left ext.	N1	Control Panel NEMA 1
CA	Magnetic contactor	PDN	P.D. Switch - fixed
CC	Cold spot on Control box side	SF	Stage fuse
CF	Control fuse	SSR	Solid-State Relay (TRIAC)
CGA	Coil Grade A (80% Nickel/20% Chrome)	TF	Transformer Fuse (primary)
DS	Disconnect switch	TR	Transformer
EAS	Electronic Airflow Sensors		
FC	Full break contactor		

OUTSIDE AIR HANDLING UNIT- ELECTRIC HEAT (PRE-PURCHASED) 1

MARK	FAN					COOLING							HEATING					PIPE SIZE TO COIL (IN.)	REMARKS
	SUPPLY AIR CFM	OUTSIDE AIR CFM	EXT. STATIC PRESSURE (IN. W.C.)	HORSE POWER	CURRENT CHARAC.	AIR TEMPERATURE (°F) ENTERING DRY BULB	ENTERING WET BULB	LEAVING DRY BULB	LEAVING WET BULB	WATER ENTERING TEMP. (°F)	GPM	MAX. PRESSURE DROP (FT.)	ENTERING AIR TEMPERATURE (°F)	MINIMUM CAPACITY (BTUH)	KW	NUMBER OF STAGES	CURRENT CHARAC.	CHILLED WATER	
OAU-1	1,400	1,400	0.6	2	480/3/60	98	79	52.5	52.0	45.0	23	10.0	27	61,419	18	SCR	480/3/60	2	(1,2,3,4,5,6,7)
OAU-2	2,000	2,000	0.6	2	480/3/60	98	79	52.5	52.0	45.0	34	10.0	27	85,304	25	SCR	480/3/60	2	(1,2,3,4,5,6,7)
OAU-3	3,200	3,200	0.6	5	480/3/60	98	79	52.5	52.0	45.0	54	10.0	27	136,486	40	SCR	480/3/60	2-1/2	(1,2,3,4,5,6,7)
OAU-4	1,900	1,900	0.6	2	480/3/60	98	79	52.5	52.0	45.0	33	10.0	27	81,891	24	SCR	480/3/60	2	(1,2,3,4,5,6,7)
OAU-5	1,400	1,400	0.6	2	480/3/60	98	79	52.5	52.0	45.0	23	10.0	27	61,419	18	SCR	480/3/60	2	(1,2,3,4,5,6,7)

GENERAL NOTES:
1. EXTERNAL STATIC PRESSURE INCLUDES LOSSES DUE TO DUCTWORK, AIR DEVICES, DAMPERS, AND DUCT MOUNTED HOT WATER COILS WHERE APPLICABLE. DIRTY FILTER AND UNIT CASING MUST BE ADDED TO EXTERNAL STATIC PRESSURE TO OBTAIN TOTAL PRESSURE LOSS. INCREASE HORSEPOWER AS REQUIRED TO MEET YOUR TOTAL PRESSURE LOSS. COORDINATE WITH ELECTRICIAN.
2. MAINTAIN MINIMUM CLEARANCE FOR COIL PULL AS RECOMMENDED BY UNIT MANUFACTURER. MAINTAIN MINIMUM CLEARANCE AS REQUIRED TO OPEN ACCESS AND CONTROL DOORS ON UNIT FOR SERVICE, MAINTENANCE, AND INSPECTION. MAINTAIN MINIMUM ELECTRICAL CLEARANCE AS REQUIRED BY NEC.
3. UNIT SHALL FIT WITHIN EXISTING AVAILABLE SPACE. MANUFACTURER SHALL FIELD VERIFY PRIOR TO ORDERING. PROVIDE SHIPPING SPLITS AS REQUIRED.

REMARKS:
1. VELOCITY NOT TO EXCEED 450 FPM ON COOLING COIL.
2. HORIZONTAL DRAW THROUGH UNIT WITH FRONT DISCHARGE AND VARIABLE FREQUENCY DRIVE.
3. PROVIDE LOW VELOCITY ANGLED FILTER SECTION.
4. ELECTRIC HEAT IN PRE-HEAT POSITION.
5. PROVIDE UNIT WITH WEATHERHOOD AND MIXING BOX SECTION WITH OUTSIDE AIR DAMPER.
6. ROOF MOUNTED WEATHERPROOF OUTSIDE AIR UNIT WITH PROVIDE 24" MINIMUM DEEP PIPING VESTIBULE WITH FULL WIDTH ACCESS DOOR.
7. PROVIDE WITH WIND RESISTANT ROOF CURB.

MULTI-ZONE AIR HANDLING UNIT (PRE-PURCHASED) 1

MARK	FAN				CURRENT CHARAC.			COOLING								PIPE SIZE TO COIL (IN.)	REMARKS
	SUPPLY AIR CFM	OUTSIDE AIR CFM	EXT. STATIC PRESSURE (IN. W.C)	HORSE POWER	V	PH	F	AIR TEMPERATURE (°F) ENTERING DRY BULB	ENTERING WET BULB	LEAVING DRY BULB	LEAVING WET BULB	WATER ENTERING TEMP (°F)	LEAVING TEMP (°F)	GPM	PRESSURE DROP (FT.)		
AHU-26	4,000	500	0.8	5.0	480	3	60	79.4	66.0	54.0	52.8	45	57	29	10	2"	(1,2,3,5,6,7,8)
AHU-27	8,000	1,000	0.8	10	480	3	60	79.4	66.0	54.0	52.8	45	57	57	10	2 1/2"	(1,2,4,5,6,7,9)

GENERAL NOTES :
1. EXTERNAL STATIC PRESSURE INCLUDES LOSSES DUE TO DUCTWORK, AIR DEVICES, DAMPERS, AND DUCT MOUNTED HOT WATER COILS WHERE APPLICABLE. DIRTY FILTER AND UNIT CASING MUST BE ADDED TO EXTERNAL STATIC PRESSURE TO OBTAIN TOTAL PRESSURE LOSS. INCREASE HORSEPOWER AS REQUIRED TO MEET YOUR TOTAL PRESSURE LOSS. COORDINATE WITH ELECTRICIAN.
2. MAINTAIN MINIMUM CLEARANCE FOR COIL PULL AS RECOMMENDED BY UNIT MANUFACTURER. MAINTAIN MINIMUM CLEARANCE AS REQUIRED TO OPEN ACCESS AND CONTROL DOORS ON UNIT FOR SERVICE, MAINTENANCE, AND INSPECTION. MAINTAIN MINIMUM ELECTRICAL CLEARANCE AS REQUIRED BY NEC.
3. UNIT SHALL FIT WITHIN EXISTING AVAILABLE SPACE. MANUFACTURER SHALL FIELD VERIFY PRIOR TO ORDERING. PROVIDE SHIPPING SPLITS AS REQUIRED.

REMARKS :
1. VELOCITY NOT TO EXCEED 500 FPM ON COOLING COIL.
2. HORIZONTAL BLOW THRU MULTIZONE UNIT WITH DIRECT DRIVE FAN AND WITH VARIABLE FREQUENCY DRIVE.
3. TOP DISCHARGE.
4. FRONT DISCHARGE.
5. LOW VELOCITY ANGLED FILTER SECTION WITH TOP INLET.
6. HEATING BY ELECTRIC DUCT HEATERS.
7. UNIT HEIGHT MUST NOT EXCEED 84".
8. UNIT LENGTH MUST NOT EXCEED 110".
9. UNIT LENGTH MUST NOT EXCEED 120".

AHU ZONES

ZONE NUMBER	LOCATION	SUPPLY CFM
Z-26-1	EXISTING ROOM	2,000
Z-26-2	EXISTING ROOM	2,000
AHU-26		4,000
Z-27-1	EXISTING ROOM	2,000
Z-27-2	EXISTING ROOM	2,000
Z-27-3	EXISTING ROOM	2,000
Z-27-4	EXISTING ROOM	2,000
AHU-27		8,000

AIR HANDLING UNIT (PRE-PURCHASED) 1

MARK	FAN					COOLING							PIPE SIZE TO COIL (IN.)	REMARKS
	SUPPLY AIR CFM	OUTSIDE AIR CFM	EXT. STATIC PRESSURE (IN. W.C.)	HORSE POWER	CURRENT CHARAC.	AIR TEMPERATURE (°F) ENTERING DRY BULB	ENTERING WET BULB	LEAVING DRY BULB	LEAVING WET BULB	WATER ENTERING TEMP. (°F)	GPM	MAX. PRESSURE DROP (FT.)	CHILLED WATER	
AHU-1	14,400	1,400	1.5	15	480/3/60	78	67	55	54	45	91	10	3	(1,2,3,5,7,8,9,10)
AHU-2	3,650	300	1.5	5.0	480/3/60	78	67	55	54	45	24	10	2	(1,2,3,5,7,8,9)
AHU-3	5,300	500	1.5	7.5	480/3/60	78	67	55	54	45	34	10	2	(1,2,3,5,7,8,9,12)
AHU-4	3,600	300	1.5	5.0	480/3/60	78	67	55	54	45	23	10	2	(1,2,3,5,7,8,9,11)
AHU-5	3,300	300	1.5	5.0	480/3/60	78	67	55	54	45	21	10	2	(1,2,3,5,7,8,9,11)
AHU-6	3,600	300	1.5	5.0	480/3/60	78	67	55	54	45	23	10	2	(1,2,3,5,7,8,9,11)
AHU-7	3,600	300	1.5	5.0	480/3/60	78	67	55	54	45	23	10	2	(1,2,3,5,7,8,9,11)
AHU-8	8,750	800	1.5	10	480/3/60	78	67	55	54	45	56	10	2-1/2	(1,2,3,6,7,8,9,13)
AHU-9	4,600	400	1.5	5.0	480/3/60	78	67	55	54	45	28	10	2	(1,2,4,6,7,8,9,14)
AHU-10	3,600	300	1.5	5.0	480/3/60	78	67	55	54	45	23	10	2	(1,2,3,5,7,8,9)
AHU-11	3,200	300	1.5	5.0	480/3/60	78	67	55	54	45	21	10	2	(1,2,3,5,7,8,9)
AHU-12	2,600	200	1.5	3.0	480/3/60	78	67	55	54	45	17	10	1-1/2	(1,2,3,5,7,8,9)
AHU-13	4,000	400	1.5	5.0	480/3/60	78	67	55	54	45	26	10	2	(1,2,3,5,7,8,9,15)
AHU-14	3,150	300	1.5	5.0	480/3/60	78	67	55	54	45	20	10	2	(1,2,3,5,7,8,9,15)
AHU-15	3,150	300	1.5	5.0	480/3/60	78	67	55	54	45	20	10	2	(1,2,3,5,7,8,9,15)
AHU-16	2,600	200	1.5	2.0	480/3/60	78	67	55	54	45	17	10	1-1/2	(1,2,3,5,7,8,9,15)
AHU-17	1,800	100	1.5	2.0	480/3/60	78	67	55	54	45	12	10	1-1/2	(1,2,3,5,7,8,9,15)
AHU-18	3,150	300	1.5	5.0	480/3/60	78	67	55	54	45	20	10	2	(1,2,3,5,7,8,9,15)
AHU-19	3,150	300	1.5	5.0	480/3/60	78	67	55	54	45	20	10	2	(1,2,3,5,7,8,9,15)
AHU-20	2,400	200	1.5	3.0	480/3/60	78	67	55	54	45	16	10	1-1/2	(1,2,3,5,7,8,9,15)
AHU-21	2,250	200	1.5	3.0	480/3/60	78	67	55	54	45	15	10	1-1/2	(1,2,3,5,7,8,9,15)
AHU-22	2,520	200	1.5	3.0	480/3/60	78	67	55	54	45	15	10	1-1/2	(1,2,3,5,7,8,9,15)
AHU-23	2,250	200	1.5	3.0	480/3/60	78	67	55	54	45	16	10	1-1/2	(1,2,3,5,7,8,9,15)
AHU-24	3,150	300	1.5	5.0	480/3/60	78	67	55	54	45	20	10	2	(1,2,3,5,7,8,9,15)
AHU-25	3,150	300	1.5	5.0	480/3/60	78	67	55	54	45	20	10	2	(1,2,3,5,7,8,9,15)

GENERAL NOTES:
1. EXTERNAL STATIC PRESSURE INCLUDES LOSSES DUE TO DUCTWORK, AIR DEVICES, DAMPERS, AND DUCT MOUNTED HOT WATER COILS WHERE APPLICABLE. DIRTY FILTER AND UNIT CASING MUST BE ADDED TO EXTERNAL STATIC PRESSURE TO OBTAIN TOTAL PRESSURE LOSS. INCREASE HORSEPOWER AS REQUIRED TO MEET YOUR TOTAL PRESSURE LOSS. COORDINATE WITH ELECTRICIAN.
2. MAINTAIN MINIMUM CLEARANCE FOR COIL PULL AS RECOMMENDED BY UNIT MANUFACTURER. MAINTAIN MINIMUM CLEARANCE AS REQUIRED TO OPEN ACCESS AND CONTROL DOORS ON UNIT FOR SERVICE, MAINTENANCE, AND INSPECTION. MAINTAIN MINIMUM ELECTRICAL CLEARANCE AS REQUIRED BY NEC.
3. UNIT SHALL FIT WITHIN EXISTING AVAILABLE SPACE. MANUFACTURER SHALL FIELD VERIFY PRIOR TO ORDERING. PROVIDE SHIPPING SPLITS AS REQUIRED.

REMARKS:
1. VELOCITY NOT TO EXCEED 500 FPM ON COOLING COIL.
2. DIRECT DRIVE FAN.
3. VERTICAL DRAW THROUGH UNIT WITH VARIABLE FREQUENCY DRIVE.
4. HORIZONTAL DRAW THROUGH UNIT WITH VARIABLE FREQUENCY DRIVE.
5. TOP DISCHARGE.
6. FRONT DISCHARGE.
7. CONSTANT VOLUME UNIT.
8. FLAT FILTER SECTION
9. HEATING BY ELECTRIC DUCT HEATERS.
10. UNIT HEIGHT MUST NOT EXCEED 108".
11. UNIT LENGTH MUST NOT EXCEED 40".
12. UNIT LENGTH MUST NOT EXCEED 56".
13. UNIT HEIGHT MUST NOT EXCEED 90".
14. UNIT LENGTH MUST NOT EXCEED 75".
15. UNIT HEIGHT MUST NOT EXCEED 62".

DX-AIR HANDLING UNIT (PRE-PURCHASED) 1

MARK	FAN					COOLING						REMARKS
	SUPPLY AIR CFM	OUTSIDE AIR CFM	EXT. STATIC PRESSURE (IN. W.C.)	HORSE POWER	CURRENT CHARAC.	AIR TEMPERATURE (°F) ENTERING DRY BULB	ENTERING WET BULB	MIN. TOTAL CAPACITY (BTUH)	MIN. SENSIBLE CAPACITY (BTUH)	MINIMUM EER/ SEER	NUMBER OF STAGES	
AHU-PE-1	8,300	1,200	0.75	10	460/3/60	78.2	65.2	336,150	234,860	10.0/-	2	(1,2,3,4,5,6,7)

GENERAL NOTES:
1. EXTERNAL STATIC PRESSURE INCLUDES LOSSES DUE TO DUCTWORK, AIR DEVICES, DAMPERS, AND DUCT MOUNTED HOT WATER COILS WHERE APPLICABLE. DIRTY FILTER AND UNIT CASING MUST BE ADDED TO EXTERNAL STATIC PRESSURE TO OBTAIN TOTAL PRESSURE LOSS. INCREASE HORSEPOWER AS REQUIRED TO MEET YOUR TOTAL PRESSURE LOSS. COORDINATE WITH ELECTRICIAN.
2. MINIMUM RECOMMENDED CLEARANCE AROUND UNIT IS 12 INCHES ON NON-SERVICE SIDES AND 30 INCHES ON SERVICE SIDES. MAINTAIN MINIMUM CLEARANCE AS REQUIRED TO OPEN ACCESS AND CONTROL DOORS ON UNIT FOR SERVICE, MAINTENANCE, AND INSPECTION. MAINTAIN MINIMUM ELECTRICAL CLEARANCE AS REQUIRED BY NEC.

REMARKS:
1. FACE VELOCITY ACROSS COOLING COIL SHALL NOT EXCEED 500 FPM.
2. CONSTANT VOLUME UNIT WITH VARIABLE FREQUENCY DRIVE..
3. PROVIDE VERTICAL FRONT DISCHARGE UNIT.
4. PROVIDE ANGLE FILTER SECTION.
5. HEATING BY ELECTRIC DUCT HEATERS.
6. UNIT HEIGHT MUST NOT EXCEED 100"
7. PROVIDE WITH FACTORY A2L REFRIGERANT LEAK DETECTION SYSTEM CERTIFIED TO UL 60335-2-40 AS SPECIFIED.

AIR COOLED CONDENSING UNIT (PRE-PURCHASED) 1

MARK	MIN. TOTAL CAPACITY (BTUH)	OUTDOOR AIR TEMP (°F)	MINIMUM EER/ SEER	NUMBER OF STAGES	CURRENT CHARAC.	RELATED UNIT MARK	REMARKS
CU-PE-1	336,150	95	10.0/-	2	460/3/60	AHU-PE-1	(1,2,3,4)

GENERAL NOTES:
1. MINIMUM RECOMMENDED CLEARANCE AROUND UNIT IS 24 INCHES ON NON-SERVICE SIDES AND 36 INCHES ON SERVICE SIDES. MAINTAIN MINIMUM CLEARANCE FOR CONDENSER AIR FLOW AS RECOMMENDED BY UNIT MANUFACTURER. MAINTAIN MINIMUM CLEARANCE AS REQUIRED TO OPEN ACCESS AND CONTROL DOORS ON UNIT FOR SERVICE, MAINTENANCE, AND INSPECTION. MAINTAIN MINIMUM ELECTRICAL CLEARANCE AS REQUIRED BY NEC.

REMARKS:
1. DISCONNECT SWITCH PROVIDED AND INSTALLED BY ELECTRICIAN.
2. PROVIDE WITH LOW AMBIENT KIT.
3. REFRIGERANT LINES TO BE SIZED PER MANUFACTURER'S REQUIREMENTS.
4. PROVIDE WITH FACTORY A2L REFRIGERANT LEAK DETECTION SYSTEM CERTIFIED TO UL 60335-2-40 AS SPECIFIED.

Salas O'Brien
salasobrien.com 281-664-1900
Houston
10930 W. Sam Houston Pkwy North, Suite 900
Houston, TX 77064
Registration: F-4111
Project No: 2550-02120-00

VLK

ARCHITECT
VLK
20445 State Hwy 249, Suite 350
Houston, Texas 77070
Main Phone: 281.671.2300
www.vlkarchitects.com

M.E.P. ENGINEER
Salas O'Brien
10930 W. Sam Houston Pkwy N, Ste. 900
Houston, Texas 77064
Main Phone: 281.664.1900
www.salasobrien.com

KLEIN ISD
KLEIN, TX

BRADLEY KALMANS
80219
02-06-2026

ISSUED: JANUARY 27, 2026

REVISIONS

Revision No.		Revision Date
1	Addendum 01	02/06/2026

Project Director: MR
Designed By: IP
Checked By: VP
Drawn By: IP

PROJECT NO.
25-0225.00

SHEET TITLE
MECHANICAL SCHEDULES - EILAND

SHEET NO.
M14.00

KISD 2025 FRP

COPYRIGHT © 2025 VLK ARCHITECTS

FAN

MARK	LOCATION	CFM	MAXIMUM RPM	EXT. STATIC PRESSURE (IN. W.C.)	HORSE POWER	CURRENT CHARAC.	LOCALLY SWITCHED BY	INTERLOCKED WITH	FAN TYPE	MANUFACTURER	MODEL NUMBER	REMARKS
KEF-2	KITCHEN 546	600	1,000	0.35	0.25	120/1/60	-	DISHMACHINE	UPBLAST	COOK	VCR	(1,2,3)

GENERAL NOTES:

1. EXTERNAL STATIC PRESSURE INCLUDES LOSSES DUE TO DUCTWORK, AIR DEVICES, DAMPERS, AND DUCT MOUNTED HOT WATER COILS WHERE APPLICABLE. DIRTY FILTER AND UNIT CASING MUST BE ADDED TO EXTERNAL STATIC PRESSURE TO OBTAIN TOTAL PRESSURE LOSS. INCREASE HORSEPOWER AS REQUIRED TO MEET YOUR TOTAL PRESSURE LOSS. COORDINATE WITH ELECTRICIAN.
2. MINIMUM RECOMMENDED CLEARANCE AROUND UNIT IS 12 INCHES ON NON-SERVICE SIDES AND 30 INCHES ON SERVICE SIDES. MAINTAIN MINIMUM CLEARANCE AS REQUIRED TO OPEN ACCESS AND CONTROL DOORS ON UNIT FOR SERVICE, MAINTENANCE, AND INSPECTION. MAINTAIN MINIMUM ELECTRICAL CLEARANCE AS REQUIRED BY NEC.

REMARKS:

1. PROVIDE WITH DISCONNECT.
2. REFER MANUFACTURER FOR INSTALLATION GUIDE.
3. ROOF MOUNTED BELT DRIVEN UPBLAST KITCHEN EXHAUST FAN.

DX-AIR HANDLING UNIT (PRE-PURCHASED) 1

MARK	FAN					COOLING					REMARKS
	SUPPLY AIR CFM	OUTSIDE AIR CFM	EXT. STATIC PRESSURE (IN. W.C.)	HORSE POWER	CURRENT CHARAC.	AIR TEMPERATURE (°F) ENTERING DRY BULB	AIR TEMPERATURE (°F) ENTERING WET BULB	MIN. TOTAL CAPACITY (BTUH)	MIN. SENSIBLE CAPACITY (BTUH)	MINIMUM EER/ SEER	NUMBER OF STAGES	
AHU-PE-1	8,300	1,200	0.75	10	460/3/60	78.2	65.2	336,150	234,860	10.0/-	2	(1,2,3,4,5,6,7)

GENERAL NOTES:

1. EXTERNAL STATIC PRESSURE INCLUDES LOSSES DUE TO DUCTWORK, AIR DEVICES, DAMPERS, AND DUCT MOUNTED HOT WATER COILS WHERE APPLICABLE. DIRTY FILTER AND UNIT CASING MUST BE ADDED TO EXTERNAL STATIC PRESSURE TO OBTAIN TOTAL PRESSURE LOSS. INCREASE HORSEPOWER AS REQUIRED TO MEET YOUR TOTAL PRESSURE LOSS. COORDINATE WITH ELECTRICIAN.
2. MINIMUM RECOMMENDED CLEARANCE AROUND UNIT IS 12 INCHES ON NON-SERVICE SIDES AND 30 INCHES ON SERVICE SIDES. MAINTAIN MINIMUM CLEARANCE AS REQUIRED TO OPEN ACCESS AND CONTROL DOORS ON UNIT FOR SERVICE, MAINTENANCE, AND INSPECTION. MAINTAIN MINIMUM ELECTRICAL CLEARANCE AS REQUIRED BY NEC.

REMARKS:

1. FACE VELOCITY ACROSS COOLING COIL SHALL NOT EXCEED 500 FPM.
2. CONSTANT VOLUME UNIT WITH VARIABLE FREQUENCY DRIVE.
3. PROVIDE VERTICAL FRONT DISCHARGE UNIT.
4. PROVIDE ANGLE FILTER SECTION.
5. HEATING BY ELECTRIC DUCT HEATERS.
6. UNIT HEIGHT MUST NOT EXCEED 100"
7. PROVIDE WITH FACTORY A2L REFRIGERANT LEAK DETECTION SYSTEM CERTIFIED TO UL 60335-2-40 AS SPECIFIED.

AIR COOLED CONDENSING UNIT (PRE-PURCHASED) 1

MARK	MIN. TOTAL CAPACITY (BTUH)	OUTDOOR AIR TEMP (°F)	MINIMUM EER/ SEER	NUMBER OF STAGES	CURRENT CHARAC.	RELATED UNIT MARK	REMARKS
CU-PE-1	336,150	95	10.0/-	2	460/3/60	AHU-PE-1	(1,2,3,4)

GENERAL NOTES:

1. MINIMUM RECOMMENDED CLEARANCE AROUND UNIT IS 24 INCHES ON NON-SERVICE SIDES AND 36 INCHES ON SERVICE SIDES. MAINTAIN MINIMUM CLEARANCE FOR CONDENSER AIR FLOW AS RECOMMENDED BY UNIT MANUFACTURER. MAINTAIN MINIMUM CLEARANCE AS REQUIRED TO OPEN ACCESS AND CONTROL DOORS ON UNIT FOR SERVICE, MAINTENANCE, AND INSPECTION. MAINTAIN MINIMUM ELECTRICAL CLEARANCE AS REQUIRED BY NEC.

REMARKS:

1. DISCONNECT SWITCH PROVIDED AND INSTALLED BY ELECTRICIAN.
2. PROVIDE WITH LOW AMBIENT KIT.
3. REFRIGERANT LINES TO BE SIZED PER MANUFACTURER'S REQUIREMENTS.
4. PROVIDE WITH FACTORY A2L REFRIGERANT LEAK DETECTION SYSTEM CERTIFIED TO UL 60335-2-40 AS SPECIFIED.

ELECTRIC DUCT HEATER

MARK	CFM	ENTERING AIR TEMP.(°F)	MINIMUM CAPACITY (BTUH)	KW	PRESSURE DROP (IN. W. G.)	NUMBER OF STAGES	CURRENT V	CURRENT P	CURRENT F	REMARKS
EDH-PE-1	7,575	67	147,258	43	0.25	SCR	480	3	60	(1)
EDH-PE-2	725	67	14,094	4	0.25	SCR	480	3	60	(1)

REMARKS:

1. PROVIDE WITH FLANGE FOR MOUNTING IN DUCTWORK.

Salas O'Brien
salasobrien.com 281-664-1900
Houston
10930 W. Sam Houston Pkwy North, Suite 900
Houston, TX 77064
Registration: F-4111
Project No: 2500-02120-00

VLK

ARCHITECT

VLK
20445 State Hwy 249, Suite 350
Houston, Texas 77070
Main Phone: 281.671.2300
www.vlkarchitects.com

M.E.P. ENGINEER

Salas O'Brien
10930 W. Sam Houston Pkwy N, Ste. 900
Houston, Texas 77064
Main Phone: 281.664.1900
www.salasobrien.com

KLEIN ISD
KLEIN, TX

BRADLEY KALMANS
86559
LICENSED PROFESSIONAL ENGINEER
02-06-2026

ISSUED: JANUARY 27, 2026

REVISIONS

Revision No.		Revision Date
1	Addendum 01	02/06/2026

Project Director:	MR
Designed By:	IP
Checked By:	VP
Drawn By:	IP

PROJECT NO.

25-0225.00

SHEET TITLE

MECHANICAL SCHEDULES - KAISER

SHEET NO.

M33.00

KISD 2025 FRP

COPYRIGHT © 2025 VLK ARCHITECTS

Salas O'Brien
salasobrien.com 281-664-1900
Houston
10930 W. Sam Houston Pkwy North, Suite 900
Houston, TX 77064
Registration: F-4111
Project No: 2550-02120-00

VLK

AHU ZONES

ZONE NUMBER	LOCATION	SUPPLY CFM
Z-1-1	EXISTING ROOM	680
Z-1-2	EXISTING ROOM	300
Z-1-3	EXISTING ROOM	2,050
Z-1-4	EXISTING ROOM	1,020
Z-1-5	EXISTING ROOM	1,220
AHU-1		5,270
Z-5-1	EXISTING ROOM	2,500
Z-5-2	EXISTING ROOM	1,610
Z-5-3	EXISTING ROOM	530
Z-5-4	EXISTING ROOM	630
Z-5-5	EXISTING ROOM	2,620
Z-5-6	EXISTING ROOM	570
AHU-5		8,460
Z-6-1	EXISTING ROOM	530
Z-6-2	EXISTING ROOM	2,620
Z-6-3	EXISTING ROOM	1,300
Z-6-4	EXISTING ROOM	1,150
Z-6-5	EXISTING ROOM	1,160
Z-6-6	EXISTING ROOM	1,520
AHU-6		8,280
Z-7-1	EXISTING ROOM	1,150
Z-7-2	EXISTING ROOM	640
Z-7-3	EXISTING ROOM	1,105
Z-7-4	EXISTING ROOM	1,520
AHU-7		4,415
Z-9-1	EXISTING ROOM	1,520
Z-9-2	EXISTING ROOM	1,160
Z-9-3	EXISTING ROOM	640
Z-9-4	EXISTING ROOM	1,150
AHU-9		4,470
Z-10-1	EXISTING ROOM	1,400
Z-10-2	EXISTING ROOM	860
Z-10-3	EXISTING ROOM	1,700
Z-10-4	EXISTING ROOM	1,100
Z-10-5	EXISTING ROOM	700
Z-10-6	EXISTING ROOM	700
Z-10-7	EXISTING ROOM	800
AHU-10		7,260
Z-11-1	EXISTING ROOM	1,355
Z-11-2	EXISTING ROOM	625
Z-11-3	EXISTING ROOM	625
Z-11-4	EXISTING ROOM	1,355
Z-11-5	EXISTING ROOM	2,750
Z-11-6	EXISTING ROOM	1,650
Z-11-7	EXISTING ROOM	950
AHU-11		9,310
Z-12-1	EXISTING ROOM	1,325
Z-12-2	EXISTING ROOM	620
Z-12-3	EXISTING ROOM	1,250
Z-12-4	EXISTING ROOM	1,655
Z-12-5	EXISTING ROOM	2,050
AHU-12		6,900

MULTI-ZONE AIR HANDLING UNIT
(PRE-PURCHASED) ⚠1

MARK	FAN: SUPPLY AIR CFM	FAN: OUTSIDE AIR CFM	FAN: EXT. STATIC PRESSURE (IN. W.C)	FAN: HORSE POWER	CURRENT CHARAC.: V	PH	F	COOLING AIR TEMPERATURE (°F): ENTERING DRY BULB	ENTERING WET BULB	LEAVING DRY BULB	LEAVING WET BULB	WATER: ENTERING TEMP (°F)	LEAVING TEMP (°F)	GPM	PRESSURE DROP (FT.)	PIPE SIZE TO COIL (IN.)	REMARKS
AHU-1	5,270	750	0.95	7.5	480	3	60	77.9	65.0	53.0	52.5	45	55	39.4	15.0	2-1/2"	(1,2,4,5,6,7)
AHU-5	8,460	860	0.75	10.0	480	3	60	77.2	64.4	55.0	54.0	45	55	65.1	15.0	3"	(1,2,3,5,6,8)
AHU-6	8,280	850	0.75	10.0	480	3	60	77.2	64.4	55.0	54.0	45	55	60.8	15.0	2-1/2"	(1,2,3,5,6,8)
AHU-7	4,415	560	0.70	7.5	480	3	60	77.8	64.9	55.0	54.5	45	55	36.2	15.0	2"	(1,2,4,5,6,9)
AHU-9	4,470	545	0.70	7.5	480	3	60	77.7	64.8	55.0	54.5	45	55	35.9	15.0	2"	(1,2,4,5,6,9)
AHU-10	7,260	1,050	0.75	10.0	480	3	60	78.1	65.1	52.5	52.0	45	55	67.7	15.0	3"	(1,2,4,5,6,9)
AHU-11	9,310	1,050	0.75	15.0	480	3	60	77.5	64.6	52.5	52.0	45	55	89.4	15.0	3"	(1,2,4,5,6,9)
AHU-12	6,900	1,350	0.75	10.0	480	3	60	79.4	66.1	52.5	52.0	45	55	68.2	15.0	3"	(1,2,4,5,6,9)

GENERAL NOTES :
1. EXTERNAL STATIC PRESSURE INCLUDES LOSSES DUE TO DUCTWORK, AIR DEVICES, DAMPERS, AND DUCT MOUNTED HOT WATER COILS WHERE APPLICABLE. DIRTY FILTER AND UNIT CASING MUST BE ADDED TO EXTERNAL STATIC PRESSURE TO OBTAIN TOTAL PRESSURE LOSS. INCREASE HORSEPOWER AS REQUIRED TO MEET YOUR TOTAL PRESSURE LOSS. COORDINATE WITH ELECTRICIAN.
2. MAINTAIN MINIMUM CLEARANCE FOR COIL PULL AS RECOMMENDED BY UNIT MANUFACTURER. MAINTAIN MINIMUM CLEARANCE AS REQUIRED TO OPEN ACCESS AND CONTROL DOORS ON UNIT FOR SERVICE, MAINTENANCE, AND INSPECTION. MAINTAIN MINIMUM ELECTRICAL CLEARANCE AS REQUIRED BY NEC.
3. UNIT SHALL FIT WITHIN EXISTING AVAILABLE SPACE. MANUFACTURER SHALL FIELD VERIFY PRIOR TO ORDERING. PROVIDE SHIPPING SPLITS AS REQUIRED.

REMARKS :
1. VELOCITY NOT TO EXCEED 500 FPM ON COOLING COIL.
2. HORIZONTAL BLOW THRU MULTIZONE UNIT WITH DIRECT DRIVE FAN AND VARIABLE FREQUENCY DRIVE.
3. TOP DISCHARGE.
4. FRONT DISCHARGE.
5. LOW VELOCITY FLAT FILTER SECTION WITH TOP INLET.
6. HEATING BY ELECTRIC DUCT HEATERS.
7. UNIT HEIGHT MUST NOT EXCEED 66".
8. UNIT HEIGHT MUST NOT EXCEED 76".
9. UNIT HEIGHT MUST NOT EXCEED 60".

AIR HANDLING UNIT
(PRE-PURCHASED) ⚠1

MARK	FAN: SUPPLY AIR CFM	FAN: OUTSIDE AIR CFM	FAN: EXT. STATIC PRESSURE (IN. W.C)	FAN: HORSE POWER	CURRENT CHARAC.: V	PH	F	COOLING AIR TEMPERATURE (°F): ENTERING DRY BULB	ENTERING WET BULB	LEAVING DRY BULB	LEAVING WET BULB	WATER: ENTERING TEMP (°F)	LEAVING TEMP (°F)	GPM	PRESSURE DROP (FT.)	PIPE SIZE TO COIL	REMARKS
AHU-2	12,245	2,400	0.75	20.0	480	3	60	79.4	66.1	55.0	54.0	45.0	57.0	100.7	15.0	3"	(1,3,4,7,8,9,10)
AHU-3	6,660	450	0.60	10.0	480	3	60	78.0	67.0	55.0	54.5	45.0	57.0	35.5	15.0	2"	(1,2,4,6,8,9,10)
AHU-8	5,450	1,200	0.60	10.0	480	3	60	79.9	66.6	55.0	54.5	45.0	57.0	49.0	15.0	2-1/2"	(1,2,4,6,8,9,10,11)

GENERAL NOTES:
1. EXTERNAL STATIC PRESSURE INCLUDES LOSSES DUE TO DUCTWORK, AIR DEVICES, DAMPERS, AND DUCT MOUNTED HOT WATER COILS WHERE APPLICABLE. DIRTY FILTER AND UNIT CASING MUST BE ADDED TO EXTERNAL STATIC PRESSURE TO OBTAIN TOTAL PRESSURE LOSS. INCREASE HORSEPOWER AS REQUIRED TO MEET YOUR TOTAL PRESSURE LOSS. COORDINATE WITH ELECTRICIAN.
2. MAINTAIN MINIMUM CLEARANCE FOR COIL PULL AS RECOMMENDED BY UNIT MANUFACTURER. MAINTAIN MINIMUM CLEARANCE AS REQUIRED TO OPEN ACCESS AND CONTROL DOORS ON UNIT FOR SERVICE, MAINTENANCE, AND INSPECTION. MAINTAIN MINIMUM ELECTRICAL CLEARANCE AS REQUIRED BY NEC.
3. UNIT SHALL FIT WITHIN EXISTING AVAILABLE SPACE. MANUFACTURER SHALL FIELD VERIFY PRIOR TO ORDERING. PROVIDE SHIPPING SPLITS AS REQUIRED.

REMARKS:
1. VELOCITY NOT TO EXCEED 500 FPM ON COOLING COIL.
2. HORIZONTAL DRAW THROUGH UNIT WITH VARIABLE FREQUENCY DRIVE..
3. VERTICAL DRAW THROUGH UNIT WITH VARIABLE FREQUENCY DRIVE..
4. DIRECT DRIVE FAN.
5. TOP DISCHARGE.
6. FRONT DISCHARGE.
7. REAR DISCHARGE.
8. CONSTANT VOLUME UNIT.
9. FLAT FILTER SECTION
10. HEATING BY ELECTRIC DUCT HEATERS.
11. UNIT HEIGHT MUST NOT EXCEED 60".

ELECTRIC DUCT HEATER

MARK	CFM	ENTERING AIR TEMP.(°F)	MINIMUM CAPACITY (BTUH)	KW	PRESSURE DROP (IN. W.G.)	NUMBER OF STAGES	CURRENT V	P	F	REMARKS
EDH-1-1	625	60	14,175	4	0.25	SCR	277	1	60	(1)
EDH-1-2	260	60	5,616	2	0.25	SCR	277	1	60	(1)
EDH-1-3	1,775	60	36,423	11	0.25	SCR	480	3	60	(1)
EDH-1-4	885	60	23,895	7	0.25	SCR	480	3	60	(1)
EDH-1-5	1,020	60	22,032	6	0.25	SCR	480	3	60	(1)
EDH-2	12,245	60	242,010	71	0.25	SCR	480	3	60	(1)
EDH-3	6,660	60	119,760	35	0.25	SCR	480	3	60	(1)
EDH-5-1	2,500	60	43,200	13	0.25	SCR	480	3	60	(1)
EDH-5-2	1,610	60	41,036	12	0.25	SCR	480	3	60	(1)
EDH-5-3	530	60	12,135	4	0.25	SCR	277	1	60	(1)
EDH-5-4	630	60	15,649	5	0.25	SCR	277	1	60	(1)
EDH-5-5	2,620	60	52,914	16	0.25	SCR	480	3	60	(1)
EDH-5-6	570	60	10,465	3	0.25	SCR	277	1	60	(1)
EDH-6-1	530	60	11,448	3	0.25	SCR	277	1	60	(1)
EDH-6-2	2,620	60	54,611	16	0.25	SCR	480	3	60	(1)
EDH-6-3	1,300	60	29,484	9	0.25	SCR	480	3	60	(1)
EDH-6-4	1,150	60	31,050	9	0.25	SCR	480	3	60	(1)
EDH-6-5	1,160	60	22,237	7	0.25	SCR	480	3	60	(1)
EDH-6-6	1,520	60	31,190	9	0.25	SCR	480	3	60	(1)
EDH-7-1	1,150	60	25,709	8	0.25	SCR	480	3	60	(1)
EDH-7-2	640	60	15,621	5	0.25	SCR	277	1	60	(1)
EDH-7-3	1,105	60	29,238	9	0.25	SCR	480	3	60	(1)
EDH-7-4	1,520	60	31,190	9	0.25	SCR	480	3	60	(1)
EDH-8	5,450	60	120,663	35	0.25	SCR	480	3	60	(1)
EDH-9-1	1,520	60	30,714	9	0.25	SCR	480	3	60	(1)
EDH-9-2	1,160	60	22,300	7	0.25	SCR	480	3	60	(1)
EDH-9-3	640	60	15,621	5	0.25	SCR	277	1	60	(1)
EDH-9-4	1,150	60	29,435	9	0.25	SCR	480	3	60	(1)
EDH-10-1	1,230	63	32,479	10	0.25	SCR	480	3	60	(1)
EDH-10-2	720	63	18,896	6	0.25	SCR	277	1	60	(1)
EDH-10-3	1,580	63	32,422	10	0.25	SCR	480	3	60	(1)
EDH-10-4	1,025	63	29,114	9	0.25	SCR	480	3	60	(1)
EDH-10-5	700	63	13,835	4	0.25	SCR	277	1	60	(1)
EDH-10-6	700	63	13,835	4	0.25	SCR	277	1	60	(1)
EDH-10-7	800	63	17,107	5	0.25	SCR	277	1	60	(1)
EDH-11-1	1,200	64	30,715	9	0.25	SCR	480	3	60	(1)
EDH-11-2	600	64	15,358	5	0.25	SCR	277	1	60	(1)
EDH-11-3	600	64	15,358	5	0.25	SCR	277	1	60	(1)
EDH-11-4	1,200	64	30,715	9	0.25	SCR	480	3	60	(1)
EDH-11-5	2,590	64	49,510	15	0.25	SCR	480	3	60	(1)
EDH-11-6	1,560	64	30,832	9	0.25	SCR	480	3	60	(1)
EDH-11-7	910	64	18,870	6	0.25	SCR	277	1	60	(1)
EDH-12-1	1,220	60	36,234	11	0.25	SCR	480	3	60	(1)
EDH-12-2	570	60	17,237	5	0.25	SCR	277	1	60	(1)
EDH-12-3	1,170	60	34,244	10	0.25	SCR	480	3	60	(1)
EDH-12-4	1,550	60	36,828	11	0.25	SCR	480	3	60	(1)
EDH-12-5	1,910	60	44,556	13	0.25	SCR	480	3	60	(1)
EDH-PE-1	7,575	67	147,258	43	0.25	SCR	480	3	60	(1)
EDH-PE-2	725	67	14,094	4	0.25	SCR	480	3	60	(1)

REMARKS
1. PROVIDE WITH FLANGE FOR MOUNTING IN DUCTWORK.

DX-AIR HANDLING UNIT
(PRE-PURCHASED) ⚠1

MARK	FAN: SUPPLY AIR CFM	FAN: OUTSIDE AIR CFM	FAN: EXT. STATIC PRESSURE (IN. W.C.)	FAN: HORSE POWER	FAN: CURRENT CHARAC.	COOLING AIR TEMPERATURE (°F): ENTERING DRY BULB	ENTERING WET BULB	MIN. TOTAL CAPACITY (BTUH)	MIN. SENSIBLE CAPACITY (BTUH)	MINIMUM EER/ SEER	NUMBER OF STAGES	REMARKS
AHU-PE-1	8,300	1,200	0.75	10	460/3/60	78.2	65.2	336,150	234,860	10.0/-	2	(1,2,3,4,5,6,7)

GENERAL NOTES:
1. EXTERNAL STATIC PRESSURE INCLUDES LOSSES DUE TO DUCTWORK, AIR DEVICES, DAMPERS, AND DUCT MOUNTED HOT WATER COILS WHERE APPLICABLE. DIRTY FILTER AND UNIT CASING MUST BE ADDED TO EXTERNAL STATIC PRESSURE TO OBTAIN TOTAL PRESSURE LOSS. INCREASE HORSEPOWER AS REQUIRED TO MEET YOUR TOTAL PRESSURE LOSS. COORDINATE WITH ELECTRICIAN.
2. MINIMUM RECOMMENDED CLEARANCE AROUND UNIT IS 12 INCHES ON NON-SERVICE SIDES AND 30 INCHES ON SERVICE SIDES. MAINTAIN MINIMUM CLEARANCE AS REQUIRED TO OPEN ACCESS AND CONTROL DOORS ON UNIT FOR SERVICE, MAINTENANCE, AND INSPECTION. MAINTAIN MINIMUM ELECTRICAL CLEARANCE AS REQUIRED BY NEC.

REMARKS:
1. FACE VELOCITY ACROSS COOLING COIL SHALL NOT EXCEED 500 FPM.
2. CONSTANT VOLUME UNIT WITH VARIABLE FREQUENCY DRIVE.
3. PROVIDE VERTICAL FRONT DISCHARGE UNIT.
4. PROVIDE ANGLE FILTER SECTION.
5. HEATING BY ELECTRIC DUCT HEATERS.
6. UNIT HEIGHT MUST NOT EXCEED 100"
7. PROVIDE WITH FACTORY A2L REFRIGERANT LEAK DETECTION SYSTEM CERTIFIED TO UL 60335-2-40 AS SPECIFIED.

AIR COOLED CONDENSING UNIT
(PRE-PURCHASED) ⚠1

MARK	MIN. TOTAL CAPACITY (BTUH)	OUTDOOR AIR TEMP (°F)	MINIMUM EER/ SEER	NUMBER OF STAGES	CURRENT CHARAC.	RELATED UNIT MARK	REMARKS
CU-PE-1	336,150	95	10.0/-	2	460/3/60	AHU-PE-1	(1,2,3,4)

GENERAL NOTES:
1. MINIMUM RECOMMENDED CLEARANCE AROUND UNIT IS 24 INCHES ON NON-SERVICE SIDES AND 36 INCHES ON SERVICE SIDES. MAINTAIN MINIMUM CLEARANCE FOR CONDENSER AIR FLOW AS RECOMMENDED BY UNIT MANUFACTURER. MAINTAIN MINIMUM CLEARANCE AS REQUIRED TO OPEN ACCESS AND CONTROL DOORS ON UNIT FOR SERVICE, MAINTENANCE, AND INSPECTION. MAINTAIN MINIMUM ELECTRICAL CLEARANCE AS REQUIRED BY NEC.

REMARKS:
1. DISCONNECT SWITCH PROVIDED AND INSTALLED BY ELECTRICIAN.
2. PROVIDE WITH LOW AMBIENT KIT.
3. REFRIGERANT LINES TO BE SIZED PER MANUFACTURER'S REQUIREMENTS.
4. PROVIDE WITH FACTORY A2L REFRIGERANT LEAK DETECTION SYSTEM CERTIFIED TO UL 60335-2-40 AS SPECIFIED.

FAN

MARK	LOCATION	CFM	MAXIMUM RPM	EXT. STATIC PRESSURE (IN. W.C.)	HORSE POWER	CURRENT CHARAC.	LOCALLY SWITCHED BY	INTERLOCKED WITH	FAN TYPE	MANUFACTURER	MODEL NUMBER	REMARKS
SF-1	MECH. ROOM 1117	5,280	1,200	0.75	3	460/3/60	-	(E)F-3	INLINE	COOK	SQN	(1,2,3,4)

GENERAL NOTES:
1. EXTERNAL STATIC PRESSURE INCLUDES LOSSES DUE TO DUCTWORK, AIR DEVICES, DAMPERS, AND DUCT MOUNTED HOT WATER COILS WHERE APPLICABLE. DIRTY FILTER AND UNIT CASING MUST BE ADDED TO EXTERNAL STATIC PRESSURE TO OBTAIN TOTAL PRESSURE LOSS. INCREASE HORSEPOWER AS REQUIRED TO MEET YOUR TOTAL PRESSURE LOSS. COORDINATE WITH ELECTRICIAN.
2. MINIMUM RECOMMENDED CLEARANCE AROUND UNIT IS 12 INCHES ON NON-SERVICE SIDES AND 30 INCHES ON SERVICE SIDES. MAINTAIN MINIMUM CLEARANCE AS REQUIRED TO OPEN ACCESS AND CONTROL DOORS ON UNIT FOR SERVICE, MAINTENANCE, AND INSPECTION. MAINTAIN MINIMUM ELECTRICAL CLEARANCE AS REQUIRED BY NEC.

REMARKS:
1. INLINE DIRECT DRIVE SUPPLY FAN WITH 1" ALUMINUM WASHABLE FILTER.
2. REFER MANUFACTURER FOR INSTALLATION GUIDE.
3. PROVIDE WITH VARIABLE FREQUENCY DRIVE.
4. SUSPEND UNIT WITH FOUR THREADED HANGER RODS ATTACHED TO TWO UNISTRUT RUNNERS SECURED TO STRUCTURE. PROVIDE SPRING ISOLATION. REFER TO MANUFACTURER FOR MORE DETAILS.

ARCHITECT
VLK
20445 State Hwy 249, Suite 350
Houston, Texas 77070
Main Phone: 281.671.2300
www.vlkarchitects.com

M.E.P. ENGINEER
Salas O'Brien
10930 W. Sam Houston Pkwy N, Ste. 900
Houston, Texas 77064
Main Phone: 281.664.1900
www.salasobrien.com

KLEIN ISD
KLEIN, TX

STATE OF TEXAS
BRADLEY KALMANS
80219
LICENSED
PROFESSIONAL ENGINEER
02-06-2026

ISSUED: JANUARY 27, 2026

REVISIONS

Revision No.		Revision Date
1	Addendum 01	02/06/2026

Project Director: MR
Designed By: IP
Checked By: VP
Drawn By: IP

PROJECT NO.
25-0225.00

SHEET TITLE
MECHANICAL SCHEDULES - KLENK

SHEET NO.
M44.00

KISD 2025 FRP

COPYRIGHT © 2025 VLK ARCHITECTS

Salas O'Brien
salasobrien.com 281-664-1900
Houston
10930 W. Sam Houston Pkwy North, Suite 900
Houston, TX 77064
Registration: F-4111
Project No: 2500-02120-00

DX-AIR HANDLING UNIT (PRE-PURCHASED) 1

MARK	FAN					COOLING						REMARKS
	SUPPLY AIR CFM	OUTSIDE AIR CFM	EXT. STATIC PRESSURE (IN. W.C.)	HORSE POWER	CURRENT CHARAC.	AIR TEMPERATURE (°F) ENTERING DRY BULB	AIR TEMPERATURE (°F) ENTERING WET BULB	MIN. TOTAL CAPACITY (BTUH)	MIN. SENSIBLE CAPACITY (BTUH)	MINIMUM EER/ SEER	NUMBER OF STAGES	
AHU-PE-1	8,300	1,200	0.75	10	460/3/60	78.2	65.2	336,150	234,860	10.0/-	2	(1,2,3,4,5,6,7)

GENERAL NOTES:

1. EXTERNAL STATIC PRESSURE INCLUDES LOSSES DUE TO DUCTWORK, AIR DEVICES, DAMPERS, AND DUCT MOUNTED HOT WATER COILS WHERE APPLICABLE. DIRTY FILTER AND UNIT CASING MUST BE ADDED TO EXTERNAL STATIC PRESSURE TO OBTAIN TOTAL PRESSURE LOSS. INCREASE HORSEPOWER AS REQUIRED TO MEET YOUR TOTAL PRESSURE LOSS. COORDINATE WITH ELECTRICIAN.
2. MINIMUM RECOMMENDED CLEARANCE AROUND UNIT IS 12 INCHES ON NON-SERVICE SIDES AND 30 INCHES ON SERVICE SIDES. MAINTAIN MINIMUM CLEARANCE AS REQUIRED TO OPEN ACCESS AND CONTROL DOORS ON UNIT FOR SERVICE, MAINTENANCE, AND INSPECTION. MAINTAIN MINIMUM ELECTRICAL CLEARANCE AS REQUIRED BY NEC.

REMARKS:

1. FACE VELOCITY ACROSS COOLING COIL SHALL NOT EXCEED 500 FPM.
2. CONSTANT VOLUME UNIT WITH VARIABLE FREQUENCY DRIVE.
3. PROVIDE VERTICAL FRONT DISCHARGE UNIT.
4. PROVIDE ANGLE FILTER SECTION.
5. HEATING BY ELECTRIC DUCT HEATERS.
6. UNIT HEIGHT MUST NOT EXCEED 100"
7. PROVIDE WITH FACTORY A2L REFRIGERANT LEAK DETECTION SYSTEM CERTIFIED TO UL 60335-2-40 AS SPECIFIED.

AIR COOLED CONDENSING UNIT (PRE-PURCHASED) 1

MARK	MIN. TOTAL CAPACITY (BTUH)	OUTDOOR AIR TEMP (°F)	MINIMUM EER/ SEER	NUMBER OF STAGES	CURRENT CHARAC.	RELATED UNIT MARK	REMARKS
CU-PE-1	336,150	95	10.0/-	2	460/3/60	AHU-PE-1	(1,2,3,4)

GENERAL NOTES:

1. MINIMUM RECOMMENDED CLEARANCE AROUND UNIT IS 24 INCHES ON NON-SERVICE SIDES AND 36 INCHES ON SERVICE SIDES. MAINTAIN MINIMUM CLEARANCE FOR CONDENSER AIR FLOW AS RECOMMENDED BY UNIT MANUFACTURER. MAINTAIN MINIMUM CLEARANCE AS REQUIRED TO OPEN ACCESS AND CONTROL DOORS ON UNIT FOR SERVICE, MAINTENANCE, AND INSPECTION. MAINTAIN MINIMUM ELECTRICAL CLEARANCE AS REQUIRED BY NEC.

REMARKS:

1. DISCONNECT SWITCH PROVIDED AND INSTALLED BY ELECTRICIAN.
2. PROVIDE WITH LOW AMBIENT KIT.
3. REFRIGERANT LINES TO BE SIZED PER MANUFACTURER'S REQUIREMENTS.
4. PROVIDE WITH FACTORY A2L REFRIGERANT LEAK DETECTION SYSTEM CERTIFIED TO UL 60335-2-40 AS SPECIFIED.

ELECTRIC DUCT HEATER

MARK	CFM	ENTERING AIR TEMP.(°F)	MINIMUM CAPACITY (BTUH)	KW	PRESSURE DROP (IN. W.G.)	NUMBER OF STAGES	CURRENT V	CURRENT P	CURRENT F	REMARKS
EDH-PE-1	7,575	67	147,258	43	0.25	SCR	480	3	60	(1)
EDH-PE-2	725	67	14,094	4	0.25	SCR	480	3	60	(1)

REMARKS:
1. PROVIDE WITH FLANGE FOR MOUNTING IN DUCTWORK.

VLK

ARCHITECT

VLK
20445 State Hwy 249, Suite 350
Houston, Texas 77070
Main Phone: 281.671.2300
www.vlkarchitects.com

M.E.P. ENGINEER

Salas O'Brien
10930 W. Sam Houston Pkwy N, Ste. 900
Houston, Texas 77064
Main Phone: 281.664.1900
www.salasobrien.com

KLEIN ISD
KLEIN, TX

BRADLEY M. KALMANS
86559
LICENSED PROFESSIONAL ENGINEER
02-06-2026

ISSUED: JANUARY 27, 2026

REVISIONS

Revision No.		Revision Date
1	Addendum 01	02/06/2026

Project Director: MR
Designed By: IP
Checked By: VP
Drawn By: IP

PROJECT NO.
25-0225.00

SHEET TITLE
MECHANICAL SCHEDULES - NITSCH

SHEET NO.
M63.00

KISD 2025 FRP

COPYRIGHT © 2025 VLK ARCHITECTS

Salas O'Brien
salasobrien.com 281-664-1900
Houston
10930 W. Sam Houston Pkwy North, Suite 900
Houston, TX 77064
Registration: F-4111
Project No: 2500-02120-00

VLK

LINETYPE LEGEND

———	EXISTING TO REMAIN
– – – –	DISCONNECT AND REMOVE
———	NEW WORK

DEMOLITION / EXISTING DRAWINGS ARE BASED ON CASUAL FIELD OBSERVATION, AND WHEN AVAILABLE, EXISTING RECORD DOCUMENTS. REPORT DISCREPANCIES TO ARCHITECT BEFORE DISTURBING EXISTING INSTALLATION, AND IMMEDIATELY AFTER SUCH DISCREPANCIES ARE DISCOVERED. CONTRACTOR TO VERIFY EXISTING CONDITIONS ON FIELD AND NOTIFY ENGINEER IF THERE ARE ANY CONFLICTS BETWEEN EXISTING CONDITIONS AND DRAWINGS PRIOR TO COMMENCEMENT OF WORK. CONTRACTOR SHALL REMOVE SUCH EXISTING WORK AS CALLED FOR ON THE DRAWINGS OR AS REQUIRED TO CLEAR THE AREAS OF NEW CONSTRUCTION.

REMOVE EXISTING AND PROVIDE NEW DUCT DETECTORS FOR AIR HANDLING UNITS BEING REPLACED BY DIVISION 23.

ELECTRICAL KEYED NOTES

1 CONNECT TO EXISTING NORMAL AND EMERGENCY CIRCUITS IN ADJACENT MECH 049 SPACE. EXTEND CONDUCTORS/CONDUIT WITH MATCHING SIZE. REFER TO SPECIFICATIONS AND DETAIL SHEETS.

2 CONNECT NEW ELECTRIC DUCT HEATER TO EXISTING MSB 30A FUSED POSITION LEFT IN PLACE AFTER DEMOLITION. PROVIDE NEW 30A/3P FUSES IN EXISTING SPACE AND PROVIDE NEW 3#10, 1#10G. 3/4"C.

3 PROVIDE NEW RECEPTACLES AS SHOWN AND CONNECT TO EXISTING CIRCUITS LEFT IN PLACE AFTER DEMOLITION, EXTEND CONDUCTORS/CONDUIT WITH MATCHING SIZE TO NEW LOCATION. FIELD VERIFY CONNECTED LOAD NOT TO EXCEED 1500 W @ 120 V.

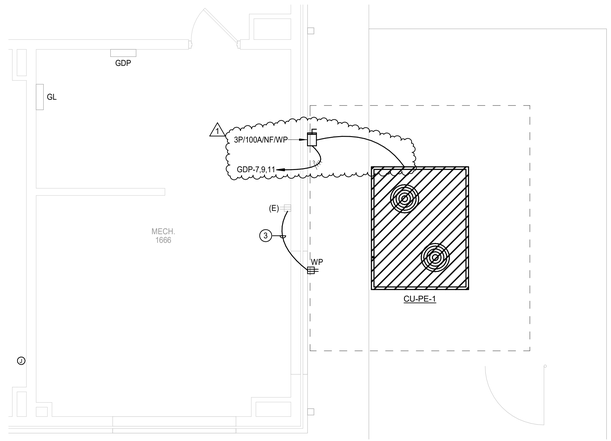

N 5 **ELECTRICAL FLOOR PLAN - MECH GYM - EILAND ES**
Scale: 1/4" = 1'-0"

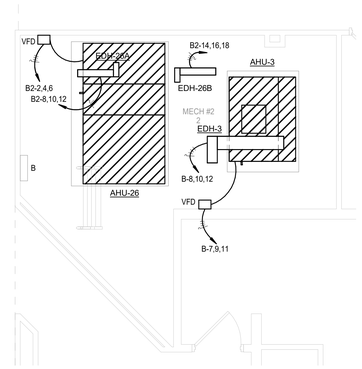

N 3 **ELECTRICAL FLOOR PLAN - MECH 2 - EILAND ES**
Scale: 1/4" = 1'-0"

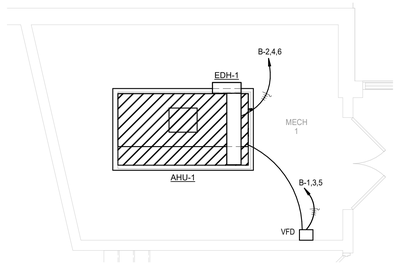

N 2 **ELECTRICAL FLOOR PLAN - MECH 1 - EILAND ES**
Scale: 1/4" = 1'-0"

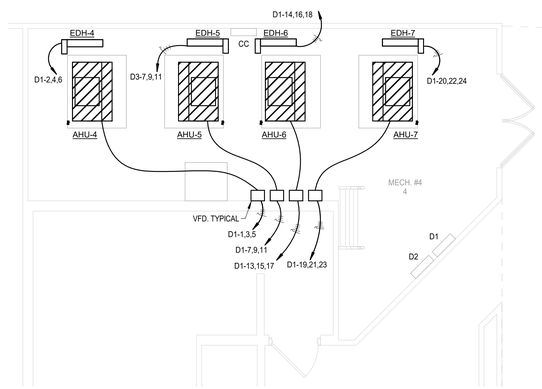

N 4 **ELECTRICAL FLOOR PLAN - MECH 4 - EILAND ES**
Scale: 1/4" = 1'-0"

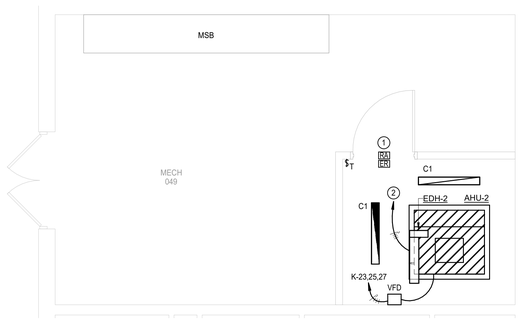

N 1 **ELECTRICAL FLOOR PLAN - MAIN ELEC. - EILAND ES**
Scale: 1/4" = 1'-0"

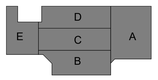

KEY PLAN

ARCHITECT

VLK
20445 State Hwy 249, Suite 350
Houston, Texas 77070
Main Phone: 281.671.2300
www.vlkarchitects.com

M.E.P. ENGINEER

Salas O'Brien
10930 W. Sam Houston Pkwy N, Ste. 900
Houston, Texas 77064
Main Phone: 281.664.1900
www.salasobrien.com

KLEIN ISD
KLEIN, TX

BRADLEY KALMANS 96659 LICENSED PROFESSIONAL ENGINEER
01-27-2026

ISSUED: JANUARY 27, 2026

REVISIONS

Revision No.		Revision Date
1	Addendum 01	02/06/2026

Project Director:	MR
Designed By:	LT
Checked By:	PS
Drawn By:	LT

PROJECT NO.
25-0225.00

SHEET TITLE
ELECTRICAL FLOOR PLANS - LEVEL 1 - EILAND ES

SHEET NO.
E13.01

KISD 2025 FRP

COPYRIGHT © 2025 VLK ARCHITECTS

PANELBOARD CIRCUIT DIRECTORY:

CONTRACTOR SHALL RECORD AND/OR PRESERVE THE EXISTING CIRCUIT DIRECTORY, IF ANY, FOR THE SOLE PURPOSE UPON COMPLETION OF NEW WORK OF PRODUCING A NEW CIRCUIT DIRECTORY.

CONTRACTOR SHALL PROVIDE AS PART OF THE CONSTRUCTION DOCUMENTS A NEW, NEATLY TYPED DIRECTORY. CONTRACTOR SHALL LEGIBLY IDENTIFY AS TO ITS CLEAR, EVIDENT, AND SPECIFIC PURPOSE OR USE. LOADS SERVED AND LOCATION AND/OR THE PANELBOARD SCHEDULE ON THE DRAWINGS. THE WORD "EXISTING" SHALL NOT BE USED ON PANELBOARD DIRECTORIES. SPARE BREAKERS ARE TO BE LISTED AS "SPARE". SPACES WITH NO BREAKERS ARE TO BE LEFT BLANK. REFER TO NEC-2023: 408.4(A) FOR DETAILS.

CONTRACTOR SHALL PERMANENTLY LABEL AS PART OF THE CONSTRUCTION DOCUMENTS ALL SWITCHBOARDS, SWITCHGEAR AND PANELBOARDS TO INDICATE EACH POWER SOURCE. REFER TO NEC-2023: 408.4(B) FOR DETAILS.

CONTRACTOR TO FIELD VERIFY INTERRUPTING FAULT CURRENT CAPACITY OF EXISTING PANELS AND/OR SWITCHBOARDS AND TO PROVIDE NEW BREAKERS/FUSES TO MATCH EXISTING.

Branch Panel: GDP — Campus: Kaiser ES — EXISTING PANEL

Location: Room 1583
Supply From:
Mounting: Surface

Volts: 277/480 Wye
Phases: 3
Wires: 4

A.I.C. Rating: Existing
Enclosure: Type 1
Mains: 400A MCB

Phase in kVA

Note	CKT	Circuit Description	Wire	Breaker	A	B	C	Breaker	Wire	Circuit Description	CKT	Note
	1				10.0 / 10.0						2	
--	3	GH	--	100	3	10.0 / 10.0		3	70	-- XFMR GT	4	--
	5						10.0 / 10.0				6	
	7				14.3 / 0.0			1	--	-- Space	8	--
1	9	CU-PE-1	#4	80	3	14.3 / 0.0		1	--	-- Space	10	--
	11						14.3 / 0.0	1	--	-- Space	12	--
	13				14.3 / 3.1						14	
1	15	EDH-PE-1	#4	70	3	14.3 / 3.1		3	20	#12 AHU-PE-1	16	1
	17						14.3 / 3.1				18	
	19				0.0 / 1.3						20	
--	21	Spare	--	70	3	0.0 / 1.3		3	20	#12 EDH-PE-2	22	1
	23						0.0 / 1.3				24	
	25				0.0 / 0.0						26	
--	27	Spare	--	30	3	0.0 / 0.0		3	100	-- Spare	28	--
	29						0.0 / 0.0				30	
			Total Load:		53.1 kVA	53.1 kVA	53.1 kVA					
			Total Amps:		192 A	192 A	192 A					

Load Classification Abbreviation	Connected Load	Demand Factor	Estimated Demand	Panel Totals	
HVAC	99.2 kVA	100.00%	99.2 kVA		
Miscellaneous	0.0 kVA	0.00%	0.0 kVA	**Total Conn. Load:**	159.2 kVA
Existing	60.0 kVA	125.00%	75.0 kVA	**Total Est. Demand:**	174.2 kVA
				Total Conn. Current:	191 A
				Total Est. Demand...	209 A

Notes:
1. New circuit and breaker.

Abbreviations:
G - PROVIDE GFCI CIRCUIT BREAKER
LF - PROVIDE PERMANENT LOCK-OFF DEVICE
LO - PROVIDE PERMANENT LOCK-ON DEVICE
M - PROVIDE METERING DEVICE

LINETYPE LEGEND

———	EXISTING TO REMAIN
— — —	DISCONNECT AND REMOVE
———	NEW WORK

DEMOLITION / EXISTING DRAWINGS ARE BASED ON CASUAL FIELD OBSERVATION, AND WHEN AVAILABLE, EXISTING RECORD DOCUMENTS. REPORT DISCREPANCIES TO ARCHITECT BEFORE DISTURBING EXISTING INSTALLATION, AND IMMEDIATELY AFTER SUCH DISCREPANCIES ARE DISCOVERED. CONTRACTOR TO VERIFY EXISTING CONDITIONS ON FIELD AND NOTIFY ENGINEER IF THERE ARE ANY CONFLICTS BETWEEN EXISTING CONDITIONS AND DRAWINGS PRIOR TO COMMENCEMENT OF WORK. CONTRACTOR SHALL REMOVE SUCH EXISTING WORK AS CALLED FOR ON THE DRAWINGS OR AS REQUIRED TO CLEAR THE AREAS OF NEW CONSTRUCTION.

REMOVE EXISTING AND PROVIDE NEW DUCT DETECTORS FOR AIR HANDLING UNITS BEING REPLACED BY DIVISION 23.

ELECTRICAL KEYED NOTES

1 DISCONNECT EXISTING MECHANICAL EQUIPMENT AND REMOVE ASSOCIATED DISCONNECT/CONTROLLER FOR MECHANICAL EQUIPMENT REPLACEMENT AND NEW DISCONNECT/CONTROLLER. REMOVE EXISTING CIRCUIT BACK TO SOURCE OR NEXT DEVICE TO REMAIN.

2 PROVIDE NEW RECEPTACLES AS SHOWN AND CONNECT TO EXISTING CIRCUITS LEFT IN PLACE AFTER DEMOLITION. EXTEND CONDUCTORS/CONDUIT WITH MATCHING SIZE TO NEW LOCATION. FIELD VERIFY CONNECTED LOAD NOT TO EXCEED 1500 W @ 120 V.

3 LEAK DETECTION. COORDINATE FINAL LOCATION WITH DIVISION 23. PROVIDE NEW BRANCH BREAKER IN EXISTING PANEL 'GL', 20A/1P, 2#12, 1#12G, 3/4"C.

4 DISCONNECT EXISTING MECHANICAL EQUIPMENT AND REMOVE ASSOCIATED DISCONNECT/CONTROLLER FOR REPLACEMENT. EXISTING CIRCUIT TO REMAIN IN PLACE FOR RE-USE.

5 CONNECT REPLACEMENT MECHANICAL EQUIPMENT TO EXISTING CIRCUITS LEFT IN PLACE AFTER DEMOLITION. EXTEND CONDUCTORS/CONDUIT WITH MATCHING SIZE.

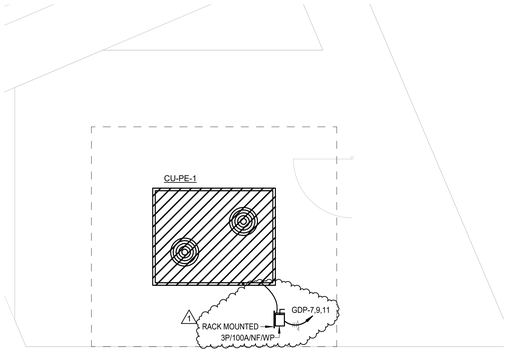

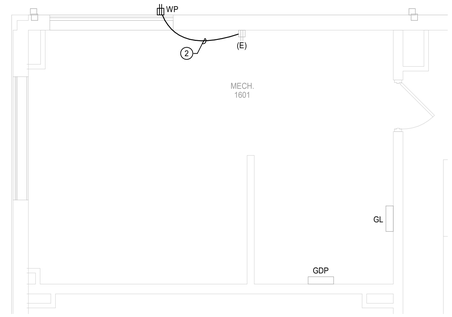

N 2 **ELECTRICAL FLOOR PLAN - MECH GYM - KAISER ES**
Scale: 1/4" = 1'-0"

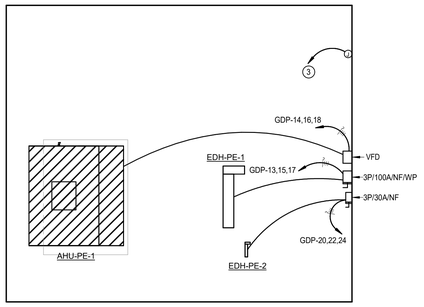

N 4 **ELECTRICAL FLOOR PLAN - MEZZ GYM - KAISER ES**
Scale: 1/4" = 1'-0"



N 6 **ELECTRICAL PLAN - LEVEL 1 - KAISER - KITCHEN**
Scale: 1/8" = 1'-0"



N 5 **ELECTRICAL DEMOLITION PLAN - KAISER - KITCHEN**
Scale: 1/8" = 1'-0"

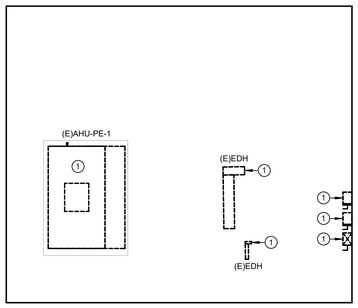

N 3 **ELECTRICAL DEMOLITION FLOOR PLAN - MEZZ GYM - KAISER ES**
Scale: 1/4" = 1'-0"

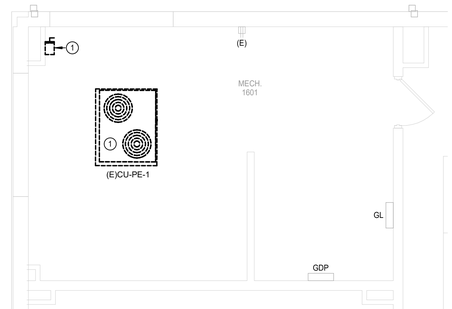

N 1 **ELECTRICAL DEMOLITION FLOOR PLAN - MECH GYM - KAISER ES**
Scale: 1/4" = 1'-0"

Salas O'Brien
salasobrien.com 281-664-1900
Houston
10930 W. Sam Houston Pkwy North, Suite 900
Houston, TX 77064
Registration: F-4111
Project No: 2500-02120-00

VLK

ARCHITECT
VLK
20445 State Hwy 249, Suite 350
Houston, Texas 77070
Main Phone: 281.671.2300
www.vlkarchitects.com

M.E.P. ENGINEER
Salas O'Brien
10930 W. Sam Houston Pkwy N, Ste. 900
Houston, Texas 77064
Main Phone: 281.664.1900
www.salasobrien.com

KLEIN ISD
KLEIN, TX

BRADLEY T. KALMANS
86559
LICENSED PROFESSIONAL ENGINEER
01-27-2026

ISSUED: JANUARY 27, 2026

REVISIONS

Revision No.	Revision Date
1 Addendum 01	02/06/2026

Project Director:	MR
Designed By:	LT
Checked By:	PS
Drawn By:	LT

PROJECT NO.
25-0225.00

SHEET TITLE
ELECTRICAL FLOOR PLANS & PANELBOARD SCHEDULES - KAISER ES

SHEET NO.
E32.01

KISD 2025 FRP

COPYRIGHT © 2025 VLK ARCHITECTS

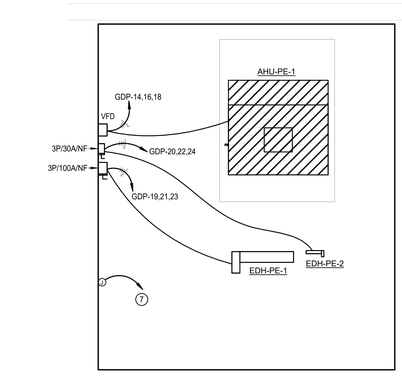

N

6 ELECTRICAL FLOOR PLAN - MEZZ GYM - KLENK ES

Scale: 1/4" = 1'-0"

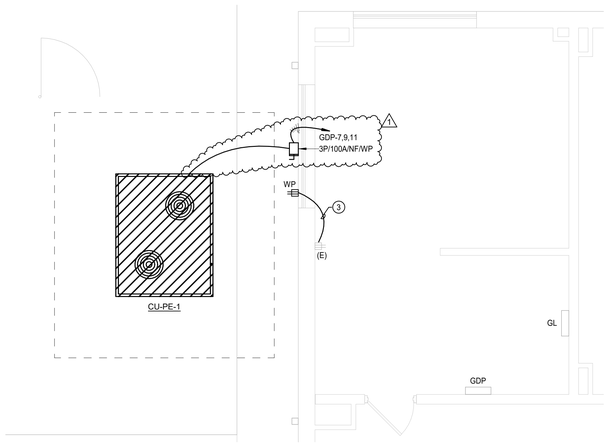

N

3 ELECTRICAL FLOOR PLAN - MECH GYM - KLENK ES

Scale: 1/4" = 1'-0"

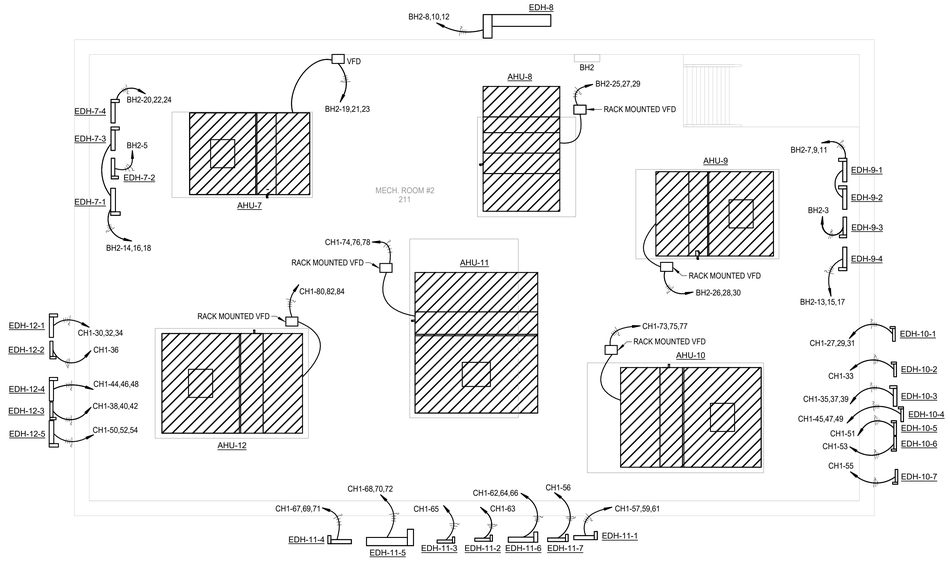

N

5 ELECTRICAL FLOOR PLAN - MECH MEZZ 2 - KLENK ES

Scale: 1/4" = 1'-0"

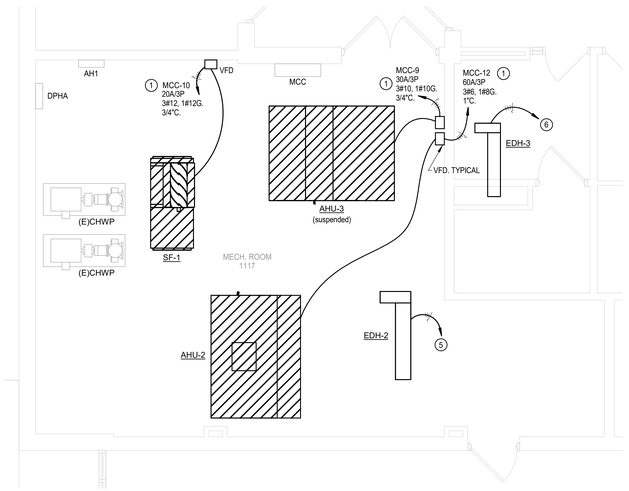

N

2 ELECTRICAL FLOOR PLAN - MECH 2 - KLENK ES

Scale: 1/4" = 1'-0"

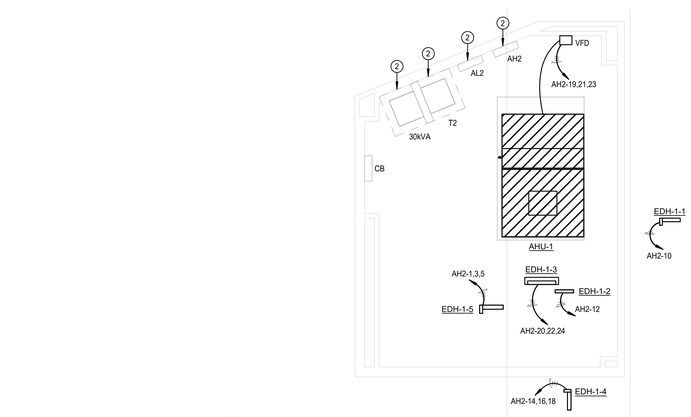

N

4 ELECTRICAL FLOOR PLAN - MECH MEZZ 1 - KLENK ES

Scale: 1/4" = 1'-0"

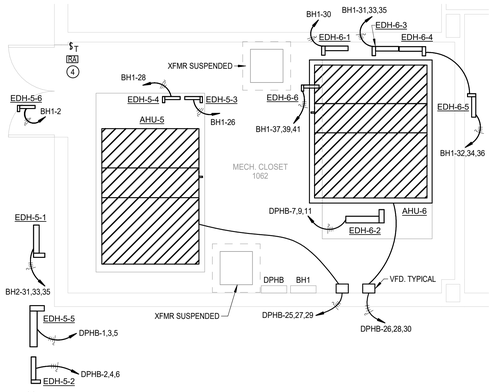

N

1 ELECTRICAL FLOOR PLAN - MECH 1 - KLENK ES

Scale: 1/4" = 1'-0"

LINETYPE LEGEND

———	EXISTING TO REMAIN
- - - -	DISCONNECT AND REMOVE
———	NEW WORK

DEMOLITION / EXISTING DRAWINGS ARE BASED ON CASUAL FIELD OBSERVATION, AND WHEN AVAILABLE, EXISTING RECORD DOCUMENTS. REPORT DISCREPANCIES TO ARCHITECT BEFORE DISTURBING EXISTING INSTALLATION, AND IMMEDIATELY AFTER SUCH DISCREPANCIES ARE DISCOVERED. CONTRACTOR TO VERIFY EXISTING CONDITIONS ON FIELD AND NOTIFY ENGINEER IF THERE ARE ANY CONFLICTS BETWEEN EXISTING CONDITIONS AND DRAWINGS PRIOR TO COMMENCEMENT OF WORK. CONTRACTOR SHALL REMOVE SUCH EXISTING WORK AS CALLED FOR ON THE DRAWINGS OR AS REQUIRED TO CLEAR THE AREAS OF NEW CONSTRUCTION.

REMOVE EXISTING AND PROVIDE NEW DUCT DETECTORS FOR AIR HANDLING UNITS BEING REPLACED BY DIVISION 23.

ELECTRICAL KEYED NOTES

1 REMOVE EXISTING OVERLOAD RELAYS AND CONTROL WIRING. CAP ALL OPENINGS AFTER REMOVAL OF CONTROLS AND INDICATORS. RE-LABEL AS FEEDER DISCONNECT ONLY. PROVIDE BRANCH BREAKER AS SHOWN AND FILLER PLATES.

2 TEMPORARILY REMOVE EXISTING PANELS AND TRANSFORMERS AND RETAIN IN PLACE ALL EXISTING BRANCH CIRCUITS AND FEEDER FOR WORK THAT REQUIRE WALL REMOVAL AND/OR REPLACEMENT, INCLUDING BUT NOT LIMITED TO MECHANICAL, TECHNOLOGY, FIRE ALARM, FIRE SPRINKLERS AND PLUMBING SCOPE OF WORK. AFTER COMPLETION, RELOCATE EXISTING PANELS AND TRANSFORMERS TO PREVIOUS LOCATION ON REPLACEMENT WALL. RETAIN IN PLACE ALL EXISTING BRANCH CIRCUITS AND FEEDER FROM SOURCE FOR ALL EXISTING PANELS LABELED TO BE TEMPORARILY REMOVED. EXTEND/RE-ROUTE EXISTING BRANCH CIRCUITS AND FEEDER LEFT IN PLACE AFTER DEMOLITION FROM EXISTING PANELS TO BE RELOCATED.

3 PROVIDE NEW RECEPTACLES AS SHOWN AND CONNECT TO EXISTING CIRCUITS LEFT IN PLACE AFTER DEMOLITION, EXTEND CONDUCTORS/CONDUIT WITH MATCHING SIZE TO NEW LOCATION. FIELD VERIFY CONNECTED LOAD NOT TO EXCEED 1500 W @ 120 V.

4 PROVIDE SWITCH AND CONNECT EXISTING LIGHTING FOR LOCAL CONTROL. EXTEND CONDUCTORS/CONDUIT WITH MATCHING SIZE TO NEW LOCATION.

5 CONNECT MECHANICAL UNIT TO EXISTING PANEL SOURCE 'DPHA'. PROVIDE NEW 110A/3P BREAKER/FUSES IN EXISTING SPACE AND PROVIDE NEW 3#2, 1#6G. 1-1/2"C.

6 CONNECT MECHANICAL UNIT TO EXISTING PANEL SOURCE 'AH1'. PROVIDE NEW 60A/3P BREAKER/FUSES IN EXISTING SPACE AND PROVIDE NEW 3#6, 1#10G. 1"C.

7 LEAK DETECTION, COORDINATE FINAL LOCATION WITH DIVISION 23. PROVIDE NEW BRANCH BREAKER IN EXISTING PANEL 'GL', 20A/1P, 2#12, 1#12G. 3/4"C.

KEY PLAN

A | B | C | D

Salas O'Brien
salasobrien.com 281-664-1900
Houston
10930 W. Sam Houston Pkwy North, Suite 900
Houston, TX 77064
Registration: F-4111
Project No: 2560-02120-00

VLK

ARCHITECT

VLK
20445 State Hwy 249, Suite 350
Houston, Texas 77070
Main Phone: 281.671.2300
www.vlkarchitects.com

M.E.P. ENGINEER

Salas O'Brien
10930 W. Sam Houston Pkwy N, Ste. 900
Houston, Texas 77064
Main Phone: 281.664.1900
www.salasobrien.com

KLEIN ISD
KLEIN, TX

BRADLEY KALMANS
LICENSED ARCHITECT
01-27-2026

ISSUED: JANUARY 27, 2026

REVISIONS

Revision No.		Revision Date
1	Addendum 01	02/06/2026

Project Director:	MR
Designed By:	LT
Checked By:	PS
Drawn By:	LT

PROJECT NO.

25-0225.00

SHEET TITLE

ELECTRICAL FLOOR PLANS - KLENK ES

SHEET NO.

E43.01

KISD 2025 FRP

COPYRIGHT © 2025 VLK ARCHITECTS

Salas O'Brien
salasobrien.com 281-664-1900
Houston
10930 W. Sam Houston Pkwy North, Suite 900
Houston, TX 77064
Registration: F-4111
Project No: 2550-02120-00

VLK

LINETYPE LEGEND

Line	Meaning
————	EXISTING TO REMAIN
— — — —	DISCONNECT AND REMOVE
━━━━	NEW WORK

DEMOLITION / EXISTING DRAWINGS ARE BASED ON CASUAL FIELD OBSERVATION, AND WHEN AVAILABLE, EXISTING RECORD DOCUMENTS. REPORT DISCREPANCIES TO ARCHITECT BEFORE DISTURBING EXISTING INSTALLATION, AND IMMEDIATELY AFTER SUCH DISCREPANCIES ARE DISCOVERED. CONTRACTOR TO VERIFY EXISTING CONDITIONS ON FIELD AND NOTIFY ENGINEER IF THERE ARE ANY CONFLICTS BETWEEN EXISTING CONDITIONS AND DRAWINGS PRIOR TO COMMENCEMENT OF WORK. CONTRACTOR SHALL REMOVE SUCH EXISTING WORK AS CALLED FOR ON THE DRAWINGS OR AS REQUIRED TO CLEAR THE AREAS OF NEW CONSTRUCTION.

REMOVE EXISTING AND PROVIDE NEW DUCT DETECTORS FOR AIR HANDLING UNITS BEING REPLACED BY DIVISION 23.

ELECTRICAL KEYED NOTES

1. DISCONNECT EXISTING MECHANICAL EQUIPMENT AND REMOVE ASSOCIATED DISCONNECT/CONTROLLER FOR MECHANICAL EQUIPMENT REPLACEMENT AND NEW DISCONNECT/CONTROLLER. REMOVE EXISTING CIRCUIT BACK TO SOURCE OR NEXT DEVICE TO REMAIN.
2. PROVIDE NEW RECEPTACLES AS SHOWN AND CONNECT TO EXISTING CIRCUITS LEFT IN PLACE AFTER DEMOLITION. EXTEND CONDUCTORS/CONDUIT WITH MATCHING SIZE TO NEW LOCATION. FIELD VERIFY CONNECTED LOAD NOT TO EXCEED 1500 W @ 120 V.
3. LEAK DETECTION, COORDINATE FINAL LOCATION WITH DIVISION 23. PROVIDE NEW BRANCH BREAKER IN EXISTING PANEL 'GL', 20A/1P, 2#12, 1#12G. 3/4"C.

PANELBOARD CIRCUIT DIRECTORY:

CONTRACTOR SHALL RECORD AND/OR PRESERVE THE EXISTING CIRCUIT DIRECTORY, IF ANY, FOR THE SOLE PURPOSE UPON COMPLETION OF NEW WORK OF PRODUCING A NEW CIRCUIT DIRECTORY.

CONTRACTOR SHALL PROVIDE AS PART OF THE CONSTRUCTION DOCUMENTS A NEW, NEATLY TYPED DIRECTORY. CONTRACTOR SHALL LEGIBLY IDENTIFY AS TO ITS CLEAR, EVIDENT, AND SPECIFIC PURPOSE OR USE, LOADS SERVED AND LOCATION AND/OR THE PANELBOARD SCHEDULE ON THE DRAWINGS. THE WORD "EXISTING" SHALL NOT BE USED ON PANELBOARD DIRECTORIES. SPARE BREAKERS ARE TO BE LISTED AS "SPARE". SPACES WITH NO BREAKERS ARE TO BE LEFT BLANK. REFER TO NEC-2023: 408.4(A) FOR DETAILS.

CONTRACTOR SHALL PERMANENTLY LABEL AS PART OF THE CONSTRUCTION DOCUMENTS ALL SWITCHBOARDS, SWITCHGEAR AND PANELBOARDS TO INDICATE EACH POWER SOURCE. REFER TO NEC-2023: 408.4(B) FOR DETAILS.

CONTRACTOR TO FIELD VERIFY INTERRUPTING FAULT CURRENT CAPACITY OF EXISTING PANELS AND/OR SWITCHBOARDS AND TO PROVIDE NEW BREAKERS/FUSES TO MATCH EXISTING.

Branch Panel: GDP — Campus: Nitsch ES — EXISTING PANEL

Location: ELEC. 1449 **Supply From:** **Mounting:** Surface
Volts: 277/480 Wye **Phases:** 3 **Wires:** 4
A.I.C. Rating: Existing **Enclosure:** Type 1 **Mains:** 400A MCB

Phase in kVA

Note	CKT	Circuit Description	Wire	Breaker		A	B	C	Breaker		Wire	Circuit Description	CKT	Note
	1					10.0 / 10.0							2	
--	3	PANEL GH	--	100	3		10.0 / 10.0		3	70	--	XFMR GT	4	--
	5							10.0 / 10.0					6	
	7					14.3 / 0.0							8	
1	9	CU-PE-1	#4	80	3		14.3 / 0.0		3	100	--	Spare	10	--
	11							14.3 / 0.0					12	
	13					0.0 / 2.7							14	
--	15	Spare	--	100	3		0.0 / 2.7		3	30	#10	AHU-PE-1	16	1
	17							0.0 / 2.7					18	
	19					14.3 / 1.3							20	
1	21	EDH-PE-1	#4	70	3		14.3 / 1.3		3	20	#12	EDH-PE-2	22	1
	23							14.3 / 1.3					24	
	25					0.0 / 0.0			1	--	--	Space	26	--
--	27	Spare	--	30	3		0.0 / 0.0		1	--	--	Space	28	--
	29							0.0 / 0.0	1	--	--	Space	30	--
			Total Load:			52.7 kVA	52.7 kVA	52.7 kVA						
			Total Amps:			190 A	190 A	190 A						

Load Classification Abbreviation	Connected Load	Demand Factor	Estimated Demand	Panel Totals	
HVAC	98.0 kVA	100.00%	98.0 kVA		
Miscellaneous	0.0 kVA	0.00%	0.0 kVA	Total Conn. Load:	158.0 kVA
Existing	60.0 kVA	125.00%	75.0 kVA	Total Est. Demand:	173.0 kVA
				Total Conn. Current:	190 A
				Total Est. Demand...	208 A

Notes:
1. New circuit and breaker.

Abbrevations:
G - PROVIDE GFCI CIRCUIT BREAKER
LF - PROVIDE PERMANENT LOCK-OFF DEVICE
LO - PROVIDE PERMANENT LOCK-ON DEVICE
M - PROVIDE METERING DEVICE

Branch Panel: BL1 — Campus: Nitsch ES — EXISTING PANEL

Location: Room 926 **Supply From:** **Mounting:** Surface
Volts: 120/208 Wye **Phases:** 3 **Wires:** 4
A.I.C. Rating: Existing **Enclosure:** Type 1 **Mains:** 100A MCB

Phase in kVA

Note	CKT	Circuit Description	Wire	Breaker		A	B	C	Breaker		Wire	Circuit Description	CKT	Note
--	1	Existing lighting contactor	--	20	1	0.1 / 0.2			1	20	--	Existing F/A booster	2	--
--	3	Existing lighting contactor	--	20	1		0.1 / 0.2		1	20	--	Existing F/A booster	4	--
--	5	Existing lighting contactor	--	20	1			0.1 / 0.4	1	20	--	Existing receptacles	6	--
--	7	Existing receptacles	--	20	1	0.4 / 0.4			1	30	--	Existing receptacles	8	--
--	9	Existing receptacles	--	20	1		0.4 / 0.4		1	20	--	Existing receptacles	10	--
--	11	Existing receptacles	--	20	1			0.4 / 0.4	1	20	--	Existing receptacles	12	--
--	13	Existing EF-6	--	20	1	0.7 / 0.4			1	20	--	Existing receptacles	14	--
--	15	Existing EDF	--	20	1		0.4 / 0.4		1	20	--	Existing receptacles	16	--
--	17	Existing EDF	--	20	1			0.4 / 0.4	1	20	--	Existing receptacles	18	--
--	19	Existing receptacles	--	20	1	0.4 / 0.4			1	20	--	Existing receptacles	20	--
--	21	Existing receptacles	--	20	1		0.4 / 0.4		1	20	--	Existing receptacles	22	--
--	23	Existing receptacles	--	20	1			0.4 / 0.4	1	20	--	Existing receptacles	24	--
--	25	Existing receptacles	--	20	1	0.4 / 0.4			1	20	--	Existing receptacles	26	--
--	27	Existing receptacles	--	20	1		0.4 / 0.4		1	20	--	Existing receptacles	28	--
--	29	Existing receptacles	--	20	1			0.4 / 0.4	1	20	--	Existing EDF	30	--
--	31	Existing hand dryer	--	30	1	0.5 / 0.4			1	20	--	Existing EDF	32	--
--	33	Existing hand dryer	--	30	1		0.5 / 0.2		1	20	--	Existing	34	--
--	35	Existing	--	30	1			0.2 / 0.4	1	20	--	Existing receptacles	36	--
	37					2.0 / 0.7			1	20	--	Existing EF-9	38	--
--	39	Existing Panel 'BL2'	--	60	3		2.0 / 0.2		1	20	--	Existing	40	--
	41							2.0 / 0.4	1	20	--	Existing EF-7/8	42	--
	43					0.0 / 0.7			1	20	--	Existing EF-6	44	--
--	45	Existing SPD	--	20	3		0.0 / 0.4		1	20	--	Existing receptacles	46	--
	47							0.0 / 0.4	1	20	--	Existing receptacles	48	--
1	49	Marquee sign	#4	20	2	0.0 / 0.0			1	--	--	Space	50	--
	51						0.0 / 0.0		1	--	--	Space	52	--
--	53	Space	--	--	1			0.0 / 0.0	1	--	--	Space	54	--
--	55	Space	--	--	1	0.0 / 0.0			1	--	--	Space	56	--
--	57	Space	--	--	1		0.0 / 0.0		1	--	--	Space	58	--
--	59	Space	--	--	1			0.0 / 0.0	1	--	--	Space	60	--
			Total Load:			8.1 kVA	6.8 kVA	7.1 kVA						
			Total Amps:			68 A	57 A	60 A						

Load Classification Abbreviation	Connected Load	Demand Factor	Estimated Demand	Panel Totals	
Miscellaneous	0.0 kVA	0.00%	0.0 kVA		
Existing	22.0 kVA	125.00%	27.5 kVA	Total Conn. Load:	22.0 kVA
				Total Est. Demand:	27.5 kVA
				Total Conn. Current:	61 A
				Total Est. Demand...	76 A

Notes:
- Splice conductors to a smaller size or provide wire reducing adapters to accommodate large wire size shown on schedule.
1. New circuit and breaker.

Abbrevations:
G - PROVIDE GFCI CIRCUIT BREAKER
LF - PROVIDE PERMANENT LOCK-OFF DEVICE
LO - PROVIDE PERMANENT LOCK-ON DEVICE
M - PROVIDE METERING DEVICE

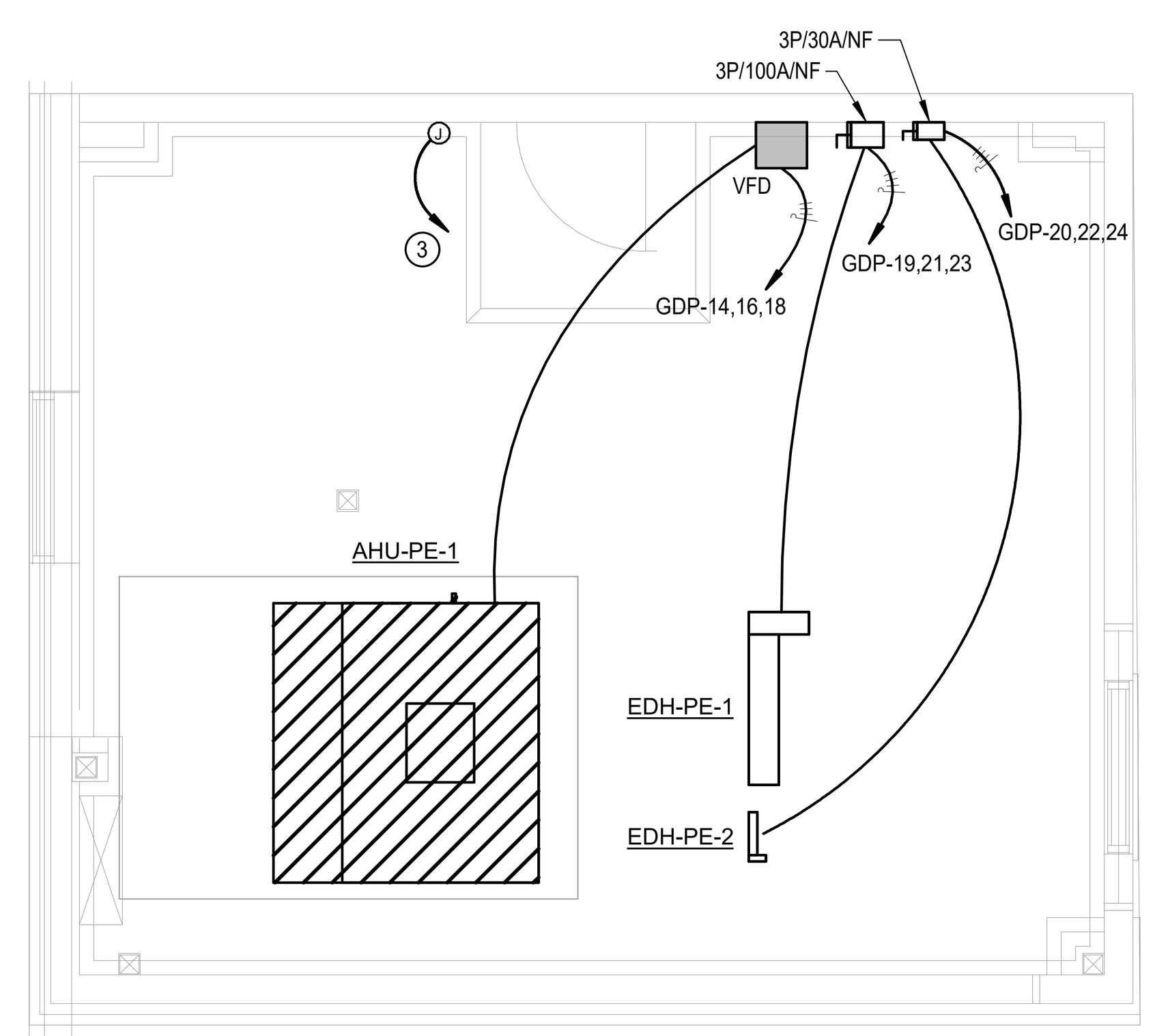

N
4 **ELECTRICAL FLOOR PLAN - MEZZ GYM - NITSCH ES**
Scale: 1/4" = 1'-0"

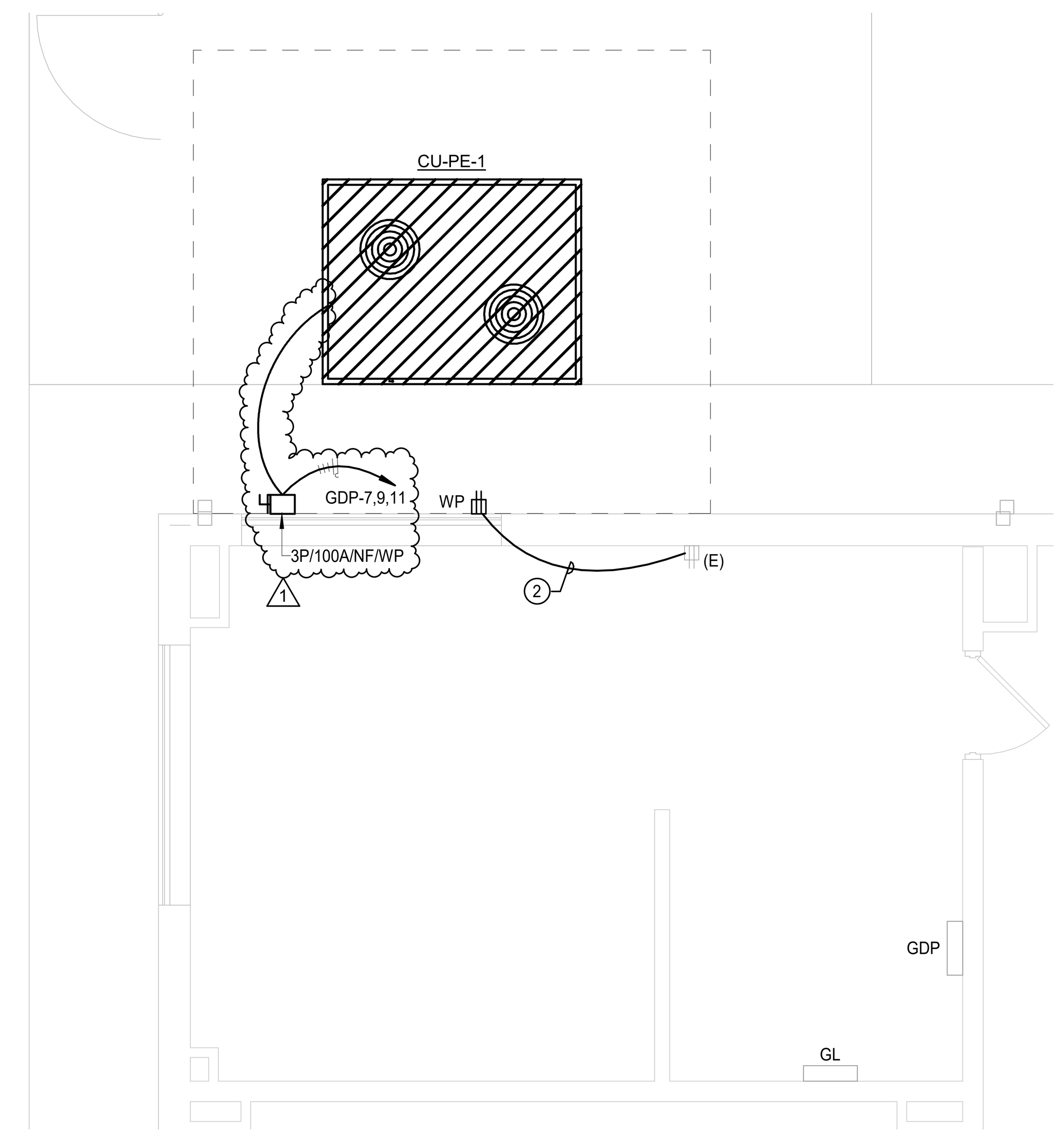

N
2 **ELECTRICAL FLOOR PLAN - MECH GYM - NITSCH ES**
Scale: 1/4" = 1'-0"

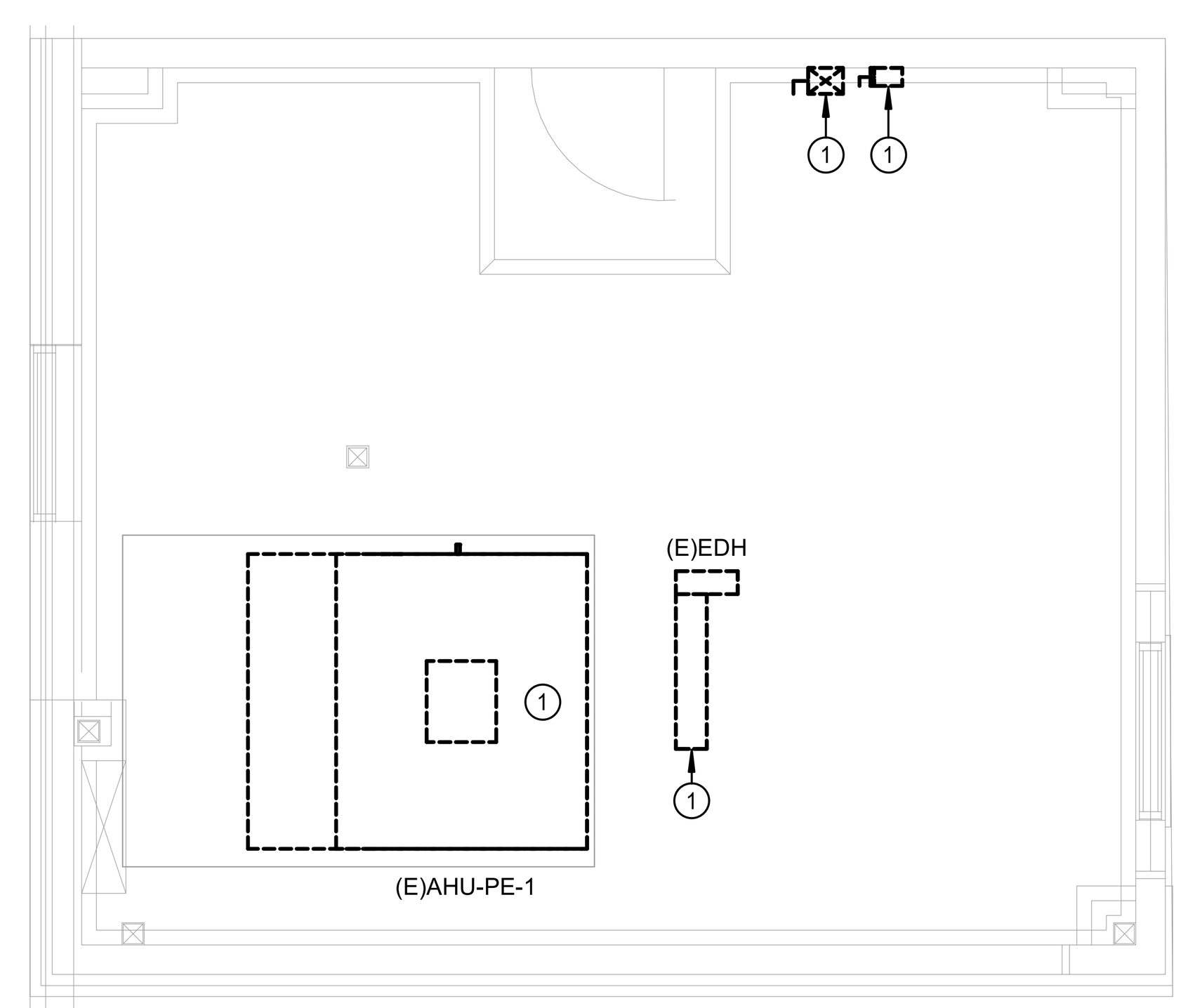

N
3 **ELECTRICAL DEMOLITION FLOOR PLAN - MEZZ. GYM - NITSCH ES**
Scale: 1/4" = 1'-0"

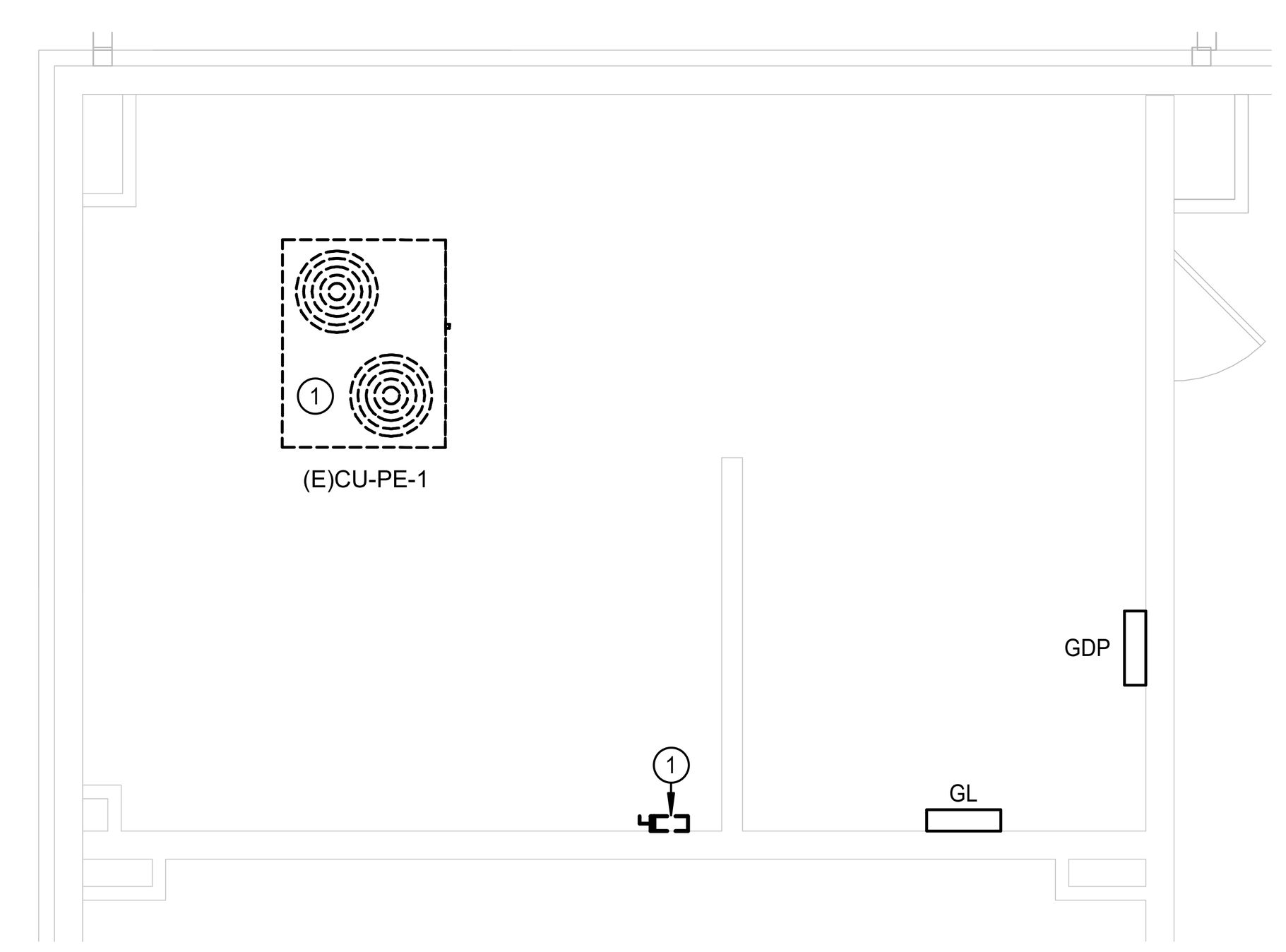

N
1 **ELECTRICAL DEMOLITION FLOOR PLAN - MECH GYM - NITSCH ES**
Scale: 1/4" = 1'-0"

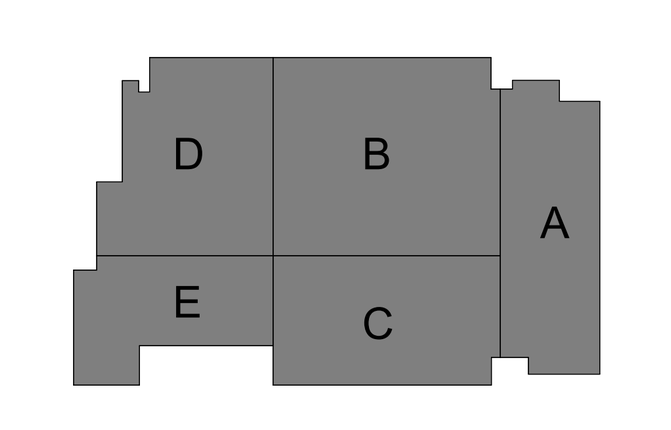

KEY PLAN

ARCHITECT
VLK
20445 State Hwy 249, Suite 350
Houston, Texas 77070
Main Phone: 281.671.2300
www.vlkarchitects.com

M.E.P. ENGINEER
Salas O'Brien
10930 W. Sam Houston Pkwy N, Ste. 900
Houston, Texas 77064
Main Phone: 281.664.1900
www.salasobrien.com

KLEIN ISD
KLEIN, TX

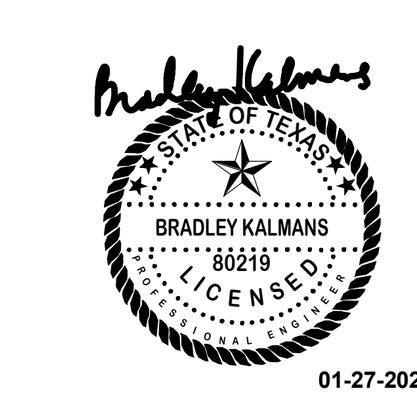

ISSUED: JANUARY 27, 2026

REVISIONS

Revision No.		Revision Date
1	Addendum 01	02/06/2026

Project Director: MR
Designed By: LT
Checked By: PS
Drawn By: LT

PROJECT NO.
25-0225.00

SHEET TITLE
ELECTRICAL FLOOR PLANS & PANELBOARD SCHEDULES - NITSCH ES

KISD 2025 FRP

SHEET NO.
E62.01

COPYRIGHT © 2025 VLK ARCHITECTS