COVER SHEET
G-000
FOR BLUEBEAM LABELING OCR:

PKG 3A - GPHS NEW FIELDHOUSE

Galena Park ISD

1000 Keene St,
Galena Park, TX 77547

ISSUE FOR PROPOSAL

June 10, 2025

BOARD OF TRUSTEES

Mrs. Norma Hernandez	Board President
Mr. Ramon Garza	Board Vice President
Mrs. Linda Clark Sherrard	Board Secretary
Mrs. Adrian stephens	Board Trustee
Mr. Noe Esparza	Board Trustee
Mr. Jose Jimenez	Board Trustee
Mrs. Amanda Erebia	Board Trustee

GPISD ADMINISTRATION

Dr. John C. Moore	Superintendent of Schools
Dr. Wanna Giacona	Chief Administrative Officer
Mr. Ben Pape	Chief Financial Officer
Dr. Mechelle Epps	Assistant Superintendent for Student Support
Mr. Mike McKay	Assistant Superintendent for Operations
Mrs. Holli Malloy	Assistant Superintendent for Academic Support
Mr. Jerid Link	Assistant Superintendent for Human Resource Services

GPISD ADMINISTRATION

Mr. Bryan Clements	Chief of Police/Executive Director for Security & Technology
Mr. Lee Ramirez	Executive Director for Operations
Dr. Kimberly Martin	Executive Director for Accountability & Academics
Ms. Vivian Dancy	Director for Athletics
Mr. Ed Martir	Director for Facilities, Planning & Construction
Mr. Trey Kraemer	Campus Liaison

ARCHITECT
PBK ARCHITECTS, INC
11 GREENWAY PLAZA
SUITE 2200
HOUSTON, TX 77046
T 713-965-0608

CIVIL ENGINEER
DIG ENGINEER
11 GREENWAY PLAZA
SUITE 1510
HOUSTON, TX 77046
T 713-965-0608

STRUCTURAL ENGINEER
KUBALA ENGINEERS
11 GREENWAY PLAZA
SUITE 1510
HOUSTON, TX 77046
T 713-965-0608

MEP ENGINEER
LEAF ENGINEERS
11 GREENWAY PLAZA
SUITE 1510
HOUSTON, TX 77046
T 713-965-0608

ENVELOPE CONSULTANT
BEAM
11 GREENWAY PLAZA
SUITE 1510
HOUSTON, TX 77046
T 713-965-0608

ISSUE FOR PROPOSAL

1000 Keene St,
Galena Park, TX 77547

PKG 3A - GPHS NEW FIELDHOUSE

SHEET INDEX AND GENERAL PROJECT INFORMATION
G-001
FOR BLUEBEAM LABEL/INDOOR:

ABBREVIATIONS AND LEGEND KEYS

REFER TO SCHEDULES AND LEGENDS FOR ADDITIONAL ABBREVIATIONS
REFER TO OTHER DISCIPLINES FOR ADDITIONAL ABBREVIATIONS

A	
ABV	above
ACOUS	acoustical
ACT	acoustical ceiling tile
AD	area drain
ADJ	adjustable
AFF	above finished floor
ALT	alternate
ALUM	aluminum
APPROX	approximate
ARCH	architect / architectural
B	
B.O.	bottom of
BALC	balcony
BD	board
BET	between
BLDG	building
BLKG	blocking
BLW	below
BM	beam
BOT	bottom
BRKT	bracket
BULKHD	bulkhead
BUR	built up roof
C	
C.G.	corner guard
CAB	cabinet
CALK	caulking
CDS	cabinet design series
CEM	cement
CER	ceramic
CJ	control joint
CLG	ceiling
CLOS	closet
CLR	clear
CO	cased opening
COL	column
CONC	concrete
CONT	continous
CPT	carpet
CT	ceramic tile
CTR	center
CW	curtain wall
D	
DBL	double
DET	detail
DIA	diameter
DIM	dimension
DN	down
DR	door
DS	down spout
DW	dishwasher
DWG	drawing
E	
E	east
EA	each
EIFS	exterior insulation & finish system
ELEC	electric(al)
ELEV	elevation
EMER	emergency
ENCL	enclosure
EOS	edge of slab
EQ	equal
EQUIP	equipment
ETR	existing to remain
EW	each way
EXP. JT.	expansion joint
EXST	existing
F	
F.O.	face of
FA	fire alarm
FAP	fire annunciator panel
FD	floor drain
FE	fire extinguisher
FEC	fire extinguisher cabinet
FG	finish group
FH	fire hydrant
FHC	fire hose cabinet
FIN	finish
FLR	floor
FLUOR	fluorescent
FT	foot or feet
FUR	furring
G	
GAL	gallon
GALV	galvanized
GB	grab bar
GC	general contractor
GL	glass
GND	ground
GWB	gypsum wall board
GYP	gypsum
H	
H.W.H.	hot water heater
HC	handicapped
HDWD	hardwood
HDWR	hardware
HM	hollow metal
HORIZ	horizontal
HR	hour
HT	height
I	
ID	inner diameter
INCAN	incandescent
INSUL	insulation
INT	interior
J	
JAN	janitor
JST	joist
JT	joint
L	
LAM	laminate
LAV	lavatory
LB	pound(s)
LDG	landing
LT	light
M	
MAX	maximum
MECH	mechanical
MEMB	membrane
MFR	manufacturer
MIN	minimum
MISC	miscellaneous
MO	masonry opening
MTD	mounted
MTL	metal
N	
N	north
NIC	not in contract
NO	number
NOM	nominal
NTS	not to scale
O	
O.P.	overflow pipe
OA	overall
OC	on center
OD	outside diameter
OFF	office
OH	opposite hand
OPG	opening
OPP	opposite
P	
PART	partition
PCT	porcelain tile
PERM	perimeter
PG	paint grade
PLAM	plastic laminate
PLAS	plaster
PLYWD	plywood
POLYISO	polyisocyanurate
PR	pair
PT	paint
PTD	painted
R	
R	riser
RAD	radius
RCP	reflected ceiling plan
RD	roof drain
RE:	refer
REF	refrigerator
REINF	reinforced
REQD	required
RESIL	resilient
RM	room
RO	rough opening
RTU	root top unit (mech)
S	
S	south
SAFB	sound attenunation fiber batt
SC	scupper
SCHED	schedule
SEAL	sealant
SECT	section
SF	square foot
SHT	sheet
SIM	similar
SPEC	specification
SQ	square
SS	stainless steel
STD	standard
STF	storefront
STL	steel
STOR	storage
STRUCT	structural
SUSP	suspended
SYM	symmetrical
T	
T	tread
T&G	tongue & groove
T.O.	top of
TEL	telephone
TER	terrazzo
THK	thick
THR	threshold
TYP	typical
U	
UC	undercut
UNFIN	unfinished
UNO	unless noted otherwise
UON	unless otherwise noted
UTIL	utility
V	
VCT	vinyl compostion tile
VERT	vertical
VIF	verify in field
VTR	vent termination pipe
VWC	vinyl wall covering
W	
W	west
W/	with
W/O	without
WC	watercloset
WIN	window
WP	waterproof
WS	wood, solid core
WSCT	wainscot
WT	weight
X	
XPS	extruded polystrene

PROJECT GRAPHIC REFERENCES

AA-201A

- **BUILDING NAME** (If Applicable)
- **BUILDING AREA** (If Applicable)
- **LEVEL REFERENCE**
- **SHEET SERIES TYPE**
- **SUBDISCIPLINE**
- **DISCIPLINE**

DISCIPLINE	
G	GENERAL
C	CIVIL
CA	SPORTS CIVIL
SA	SPORTS ARCH
S	STRUCTURAL
L	LANDSCAPE
D	DEMOLITION
A	ARCHITECTURAL
M	MECHANICAL
E	ELECTRICAL
P	PLUMBING
T	TECHNOLOGY
FS	FOOD SERVICE
AV	ACOUSTICAL
TH	THEATRICAL

SUBDISCIPLINE	
-	*NOT USED*
S	SITE
D	DEMO
F	FURNITURE
G	GRAPHICS & SIGNAGE
Q	EQUIPMENT

0	GENERAL
1	PLANS (Site, Floor, Finish, Graphics)
2	CEILING
3	ROOF
4	ENLARGED PLANS
5	ELEVATIONS (Exterior)
6	SECTIONS (Bldg & Wall)
7	BLDG DETAILS
8	DIAGRAMS/COMPILED SCHEDULES (Partition Types, Door & Panel/Frame Types, Window Types)
9	INTERIOR FINISHES/SCHEDULES (Finish Plan, Interior Elevations, Casework/Millwork Elevations & Details, Locker Types & Details)

GENERAL NOTES

A. THE CONTRACT DOCUMENTS ARE TO INCLUDE AIA DOCUMENT A201 "GENERAL CONDITIONS OF THE CONTRACT FOR CONSTRUCTION". CLIENT SHALL BE DESIGNATED AS "THE OWNER", PBK ARCHITECTS, INC. SHALL BE DESIGNATED AS "THE ARCHITECT". FACILITY SHALL BE DESIGNATED AS "THE LANDLORD". THE CONTRACT DOCUMENT SHALL ALSO INCLUDE THE AGREEMENT, PERFORMANCE AND PAYMENT BONDS, GENERAL CONDITIONS, SUPPLEMENTARY CONDITIONS, THE SPECIFICATIONS, CONTRACT DRAWINGS ADDENDA, AND CONTRACT MODIFICATIONS, BUILDING RULES AND REGULATIONS & ANY OTHER DOCUMENTS REQUIRED BY THE OWNER.

B. THE WORK SHALL BE DONE IN ACCORDANCE WITH THE RULES AND REGULATIONS OF ALL APPLICABLE SAFETY AND BUILDING CODES, AND AS APPROVED BY THE AUTHORITY HAVING JURISDICTION. CONTRACTOR IS RESPONSIBLE FOR SECURING AND PAYING FOR ALL PERMITS REQUIRED FOR THE WORK AND FOR THE SCHEDULING OF ALL REQUIRED INSPECTIONS DURING THE COURSE OF THE WORK.

C. CONTRACTOR SHALL REVIEW AND VERIFY EXISTING CONDITIONS AS PROVIDED IN THE CONSTRUCTION DOCUMENTS. CONTRACTOR SHALL NOTIFY THE ARCHITECT OF ALL DISCREPANCIES, ERRORS, INCONSISTENCIES OR AMBIGUITIES PRIOR TO PROCEEDING WITH THE WORK.

D. CONTRACTOR SHALL BE RESPONSIBLE FOR, AND PROVIDE PROTECTION OF, ANY EXISTING FINISHES, MATERIALS, AND EQUIPMENT TO REMAIN. CONTRACTOR SHALL REPAIR OR REPLACE ANY DAMAGED FINISHES, MATERIALS, AND EQUIPMENT AS A RESULT OF THE WORK. ALL EXISTING FINISHES TO REMAIN SHALL BE CLEANED AT THE COMPLETION OF CONSTRUCTION. CONTRACTOR SHALL PHOTOGRAPH AND DOCUMENT ALL EXISTING DAMAGES, AND PROVIDE TO THE ARCHITECT, PRIOR TO PROCEEDING WITH THE WORK.

E. ALL MATERIALS AND SYSTEMS SHALL BE INSTALLED PER MANUFACTURER'S SPECIFICATIONS. ALL CONSTRUCTION SHALL BE OF INDUSTRY STANDARD OR BETTER. THE ARCHITECT SHALL BE FINAL JUDGE OF QUALITY.

F. ONLY NEW MATERIALS AND EQUIPMENT OF RECENT MANUFACTURE, OF STANDARD QUALITY, AND FREE FROM DEFECTS, WILL BE PERMITTED IN THE WORK, UNLESS OTHERWISE NOTED. REJECTED MATERIALS AND EQUIPMENT SHALL BE REMOVED IMMEDIATELY FROM THE WORK AND REPLACED WITH MATERIALS AND EQUIPMENT OF THE QUALITY SPECIFIED. FAILURE TO REMOVE REJECTED MATERIALS AND EQUIPMENT SHALL NOT RELIEVE CONTRACTOR FROM THE RESPONSIBILITY FOR QUALITY OF MATERIAL AND EQUIPMENT USED NOR FROM ANY OTHER OBLIGATION IMPOSED BY THE CONTRACT.

G. DO NOT SCALE DRAWINGS. STATED & WRITTEN DIMENSIONS GOVERN. CONTRACTOR SHALL VERIFY ALL DIMENSIONS IN THE FIELD AND SHALL BE RESPONSIBLE FOR THEIR ACCURACY. NO EXTRA CHARGE OR COMPENSATION SHALL BE ALLOWED BECAUSE OF DIFFERENCE BETWEEN ACTUAL DIMENSIONS AND THOSE INDICATED ON THE DRAWINGS, UNLESS THEY CONTRIBUTE TO A CHANGE IN THE SCOPE OF THE WORK. ANY DIFFERENCE FOUND SHALL BE SUBMITTED TO THE ARCHITECT FOR COORDINATION PRIOR TO ORDERING, MANUFACTURING, OR PROCEEDING WITH THE WORK. HORIZONTAL DIMENSIONS INDICATED ARE TO/FROM FACE OF FINISH, UNLESS NOTED OTHERWISE. VERTICAL DIMENSIONS ARE FROM TOP OF FLOOR SLAB EXCEPT WHERE NOTED TO BE ABOVE FINISHED FLOOR (AFF). DIMENSIONS ARE NOT ADJUSTABLE WITHOUT APPROVAL OF ARCHITECT UNLESS NOTED +/-.

H. CONTRACTOR SHALL VERIFY THAT NO CONFLICTS EXIST BETWEEN THE LOCATIONS OF EXISTING AND PROPOSED NEW MECHANICAL, ELECTRICAL, PLUMBING, DATA, AND SPRINKLER EQUIPMENT (INCLUDING BUT NOT LIMITED TO STRUCTURAL MEMBERS, PIPING, DUCT WORK, CONDUIT AND SPRINKLERS) AND THAT CLEARANCES FOR INSTALLATION AND MAINTENANCE OF EQUIPMENT ARE PROVIDED. ELEMENTS IN CONFLICT SHALL BE DOCUMENTED AND PROVIDED TO THE ARCHITECT PRIOR TO PROCEEDING WITH THE WORK.

J. CONTRACTOR SHALL PROVIDE THE ARCHITECT WITH SHOP DRAWINGS FOR REVIEW AND APPROVAL. FOR ALL, BUT NOT LIMITED TO, THE FOLLOWING: SHOP-FABRICATED MILLWORK, CARPET LAYOUT, FLOORING, LIGHT FIXTURES, DOORS, MISC. STEEL, METAL FABRICATION, GLASS/GLAZING, SPRINKLER LAYOUTS, HARDWARE. SHOP DRAWINGS SHALL BE SUBMITTED IN THE FORM OF 3 SETS OF PRINTS. SHOP DRAWINGS SHALL NOT BE REPRODUCTIONS OF CONTRACT DOCUMENTS. MATERIAL SUBMITTALS (3 SAMPLES) SHALL BE PROVIDED FOR WOOD, FASTENERS, ACRYLIC, CARPET, TILE, BASE, PAINT, LAMINATE AND ANY OTHER MATERIALS INDICATED IN THE SHOP DRAWING.

K. CONTRACTOR SHALL PROVIDE THE ARCHITECT WITH MANUFACTURER'S CUT SHEETS AND SPECIFICATIONS FOR ALL EQUIPMENT INCLUDING BUT NOT LIMITED TO: LIGHT FIXTURES, PLUMBING EQUIPMENT, ELECTRICAL EQUIPMENT, FANS, SUPPLEMENTARY HEATING AND COOLING ELEMENTS, ALL HARDWARE AND SECURITY EQUIPMENT.

L. CONTRACTOR SHALL NOT PROCEED WITH WORK FOR WHICH ADDITIONAL COMPENSATION BEYOND THE CONTRACT AMOUNT IS EXPECTED WITHOUT WRITTEN AUTHORIZATION FROM THE ARCHITECT AND OWNER. FAILURE TO OBTAIN SUCH AUTHORIZATION SHALL INVALIDATE A CLAIM FOR EXTRA COMPENSATION. CONTRACTOR SHALL NOT PROCEED WITH WORK WHICH, IF COMPLETED IN STRICT CONFORMANCE WITH THE CONSTRUCTION DOCUMENTS, WILL RESULT IN ADDITIONAL WORK BEYOND THE SCOPE OF THE CONTRACT WITHOUT WRITTEN AUTHORIZATION FROM THE ARCHITECT AND OWNER. ANY FIELD CONDITIONS THAT SIGNIFICANTLY VARY FROM THE CONTRACT DOCUMENTS OR WILL RESULT IN ADDITIONAL WORK, SHALL BE BROUGHT TO THE ATTENTION OF THE ARCHITECT PRIOR TO PROCEEDING WITH WORK.

M. CONTRACTOR SHALL REVIEW AND COORDINATE THE SIZE AND LOCATION OF ALL SLAB OPENINGS WITH ALL RELATED DISCIPLINES. CONTRACTOR SHALL SUBMIT PROPOSED LOCATIONS OF CORE DRILLING AND SLAB OPENINGS TO ARCHITECT AND STRUCTURAL ENGINEER OF RECORD FOR REVIEW AND APPROVAL PRIOR TO PROCEEDING WITH THE WORK.

N. PATCH, REPAIR, AND INSTALL ALL FIREPROOFING AS REQUIRED BY CODE. FIREPROOF ALL NEW PENETRATIONS AS REQUIRED FOR APPROVAL BY THE AUTHORITY HAVING JURISDICTION.

P. WHERE BUILDING THERMAL EXPANSION JOINTS ARE LOCATED, CONTRACTOR SHALL COMPLY WITH APPLICABLE CODE AND INDUSTRY BEST PRACTICES FOR ROUTING OF ALL PIPING, DUCTS, CONDUITS AND OTHER CONTINUOUS RUNS.

Q. CONTRACTOR SHALL CONTINUOUSLY CHECK ARCHITECTURAL AND STRUCTURAL CLEARANCES FOR ACCESSIBILITY OF EQUIPMENT AND MECHANICAL AND ELECTRICAL SYSTEMS. NO ALLOWANCES OF ANY KIND WILL BE MADE FOR THE GENERAL CONTRACTOR'S NEGLIGENCE TO FORESEE MEANS OF INSTALLING EQUIPMENT INTO POSITION.

R. FINISHED WORK SHALL BE FIRM, WELL-ANCHORED, IN TRUE ALIGNMENT, PLUMB, LEVEL, WITH SMOOTH, CLEAN, UNIFORM, APPEARANCE WITHOUT WAVES, DISTORTIONS, HOLES, MARKS, CRACKS, STAINS, OR DISCOLORATION. JOINTING SHALL BE CLOSE FITTING, NEAT AND WELL SCRIBED. FINISHED WORK SHALL HAVE NO EXPOSED UNSIGHTLY ANCHORS OR FASTENERS AND SHALL NOT PRESENT HAZARDOUS, UNSAFE CORNERS. ALL WORK SHALL HAVE THE PROVISION FOR EXPANSION, CONTRACTION AND SHRINKAGE AS NECESSARY TO PREVENT CRACKS, BUCKLING, AND WARPING DUE TO TEMPERATURE AND HUMIDITY CONDITIONS.

S. ATTACHMENTS, CONNECTIONS OR FASTENERS OF ANY NATURE ARE TO PROPERLY AND PERMANENTLY BE SECURED IN CONFORMANCE WITH INDUSTRY BEST PRACTICES. THE DRAWINGS HIGHLIGHT SPECIAL CONDITIONS ONLY AND BY NO MEANS ILLUSTRATE EVERY CONNECTION. THE CONTRACTOR IS RESPONSIBLE FOR IMPROVING CONNECTION ACCORDINGLY.

T. CONTRACTOR SHALL WAIVE "COMMON PRACTICE" AND "COMMON USAGE" AS CONSTRUCTION CRITERIA WHEREVER DETAILS AND CONTRACT DOCUMENTS OR GOVERNING CODES, ORDINANCES, ETC. REQUIRE QUANTITY OR BETTER QUALITY THAN COMMON PRACTICE OR COMMON USAGE WOULD REQUIRE.

U. CONTRACTOR SHALL SUBMIT SHOP DRAWINGS AND SUBMITTALS AND SHALL ORDER AND SCHEDULE DELIVERY OF MATERIALS TO AVOID DELAYS IN CONSTRUCTION. IF AN ITEM IS FOUND TO BE UNAVAILABLE OR TO HAVE A LONG LEAD TIME, THE GENERAL CONTRACTOR SHALL NOTIFY ARCHITECT IMMEDIATELY WITH A PROPOSED ALTERNATIVE.

V. CONTRACTOR SHALL NOTIFY THE OWNER, THE LANDLORD, AND THE ARCHITECT IN WRITING OF ANY DEFICIENCIES IN BASE BUILDING WORK PRIOR TO THE COMMENCEMENT OF THE WORK. ANY UNREPORTED DEFICIENCIES WILL BECOME THE RESPONSIBILITY OF THE GENERAL CONTRACTOR TO CORRECT.

W. CONTRACTOR SHALL EXERCISE INDUSTRY BEST PRACTICES FOR CARE AND CAUTION DURING THE CONSTRUCTION OF THE WORK, AND SHALL SCHEDULE WORK TO MINIMIZE DISTURBANCES TO OCCUPANTS, ADJACENT SPACES AND/OR STRUCTURES, PROPERTY, PUBLIC THOROUGHFARES, ETC. THE GENERAL CONTRACTOR SHALL TAKE PRECAUTIONS AND BE RESPONSIBLE FOR THE SAFETY OF ALL BUILDING OCCUPANTS DURING CONSTRUCTION PROCEDURES. THE GENERAL CONTRACTOR SHALL BE RESPONSIBLE FOR ANY COSTS INCURRED.

X. ALL DEBRIS SHALL BE REMOVED FROM THE SITE ON A DAILY BASIS, OR AS DIRECTED BY THE AUTHORITY HAVING JURISDICTION. UPON COMPLETION OF THE WORK, REMOVE ALL DEBRIS FROM THE WORK PROVIDED UNDER THIS CONTRACT AND LEAVE ALL AREAS CLEAN. TRASH IS NOT PERMITTED TO BE BURNED ON SITE.

Y. ALL ABANDONED AND MISCELLANEOUS NAILS, HANGERS, STAPLES, WIRES, CONDUITS AND DEBRIS SHALL BE REMOVED FROM EXPOSED AREAS OF THE FLOORS, WALLS, AND CEILINGS. REMOVE ALL ABANDONED PIPE SLEEVES IN FLOOR SLABS. PATCH EXISTING SLAB AS REQUIRED TO MAINTAIN UL FIRE RATING OF FLOOR SLAB WHERE PIPES AND CONDUITS HAVE BEEN REMOVED.

Z. SLAB PENETRATIONS SHALL BE SEALED AS REQUIRED TO MAINTAIN FIRE RATING, USING MATERIALS AND METHODS APPROVED BY THE AUTHORITY HAVING JURISDICTION. EXPANSION MATERIAL SHALL BE APPROVED BY THE ARCHITECT.

ZA. CONTRACTOR SHALL NOTIFY THE ARCHITECT OF ANY ACCESS PANELS WHICH MAY BE REQUIRED PRIOR TO PROCEEDING WITH THE WORK. CONTRACTOR SHALL BE RESPONSIBLE FOR COORDINATING ALL TRADES. REQUIRED ACCESS PANELS SHALL BE INCLUDED IN THE CONTRACTOR'S SCOPE OF WORK.

ZB. CONTRACTOR SHALL PROVIDE THE TEAM WITH A CONSTRUCTION SCHEDULE SHOWING THE PROPOSED PHASING. LONG LEAD ITEMS THAT WILL AFFECT THE SUBSTANTIAL COMPLETION DATE SHALL BE BROUGHT TO THE ARCHITECT'S ATTENTION IMMEDIATELY.

PROJECT GRAPHIC REFERENCES

PROJECT SYMBOLS

- PLAN NORTH / NORTH ARROW
- TRUE NORTH / NORTH ARROW
- WORKING POINT / LEVEL POINT / DATUM POINT / SPOT ELEVATION / TOP OF FRAMING/STEEL
- FIRE RATING TYPE / PARTITION MODIFIER / STRUCTURAL CORE WIDTH / PARTITION TYPE / PARTITION TYPE TAG / (RE: PARTITION SCHEDULE)
- BLDG AREA / LEVEL / DOOR SEQUENCE / (RE: DOOR SCHEDULE)
- ROOM NAME / (RE: ROOM FINISH SCHEDULE) / ROOM SEQUENCE / LEVEL / BLDG AREA
- EXIT SIGN / DIRECTION SYMBOL
- MATCHLINE / VIEW REFERENCE
- CURTAINWALL TAG / STOREFRONT TAG
- KEYNOTE TAG
- WINDOW & LOUVER TAG
- MATERIAL TAG
- REVISION TAG
- CASEWORK TYPE (CDS NUMBER) / SIZE (WxD)

PROJECT SYMBOLS

- CEILING TYPE / CEILING HEIGHT
- COLUMN LINE / REFERENCE
- EXISTING/NEW COLUMN LINE / REFERENCE
- DETAIL NUMBER / SHEET NUMBER / CALLOUT / REFERENCE
- EXTERIOR REFERENCE / ELEVATION NUMBER / SHEET NUMBER
- INTERIOR REFERENCE / ELEVATION NUMBER / SHEET NUMBER
- REFERENCE / BUILDING SECTION REFERENCE / DETAIL NUMBER / SHEET NUMBER
- REFERENCE / WALL SECTION REFERENCE / DETAIL NUMBER / SHEET NUMBER
- CENTER LINE, & SYMBOL
- ABOVE LINE
- BEYOND LINE
- BREAK LINE

CONSTRUCTION TYPE SYMBOLS

- EXISTING CONSTRUCTION TO REMAIN
- EXISTING CONSTRUCTION TO BE DEMOLISHED
- NEW NON-RATED CONSTRUCTION

MATERIAL INDICATIONS

- CONCRETE
- BRICK
- CONC. MASONRY UNITS (CMU)
- RIGID INSULATION
- BATT INSULATION
- ACOUSTICAL TILE / FABRIC PANEL
- GYPSUM BOARD
- PLASTER ON METAL LATH
- FINISH WOOD
- CONTINUOUS WOOD
- BLOCKING / SHIM
- PLYWOOD
- EARTH
- CAST STONE / SPRAY ON INSULATION / SAND / MORTAR
- STEEL
- ALUMINUM
- STONE
- GRAVEL
- SEALANT
- ROD STOCK & SEALANT

VICINITY MAP

ARCHITECTURAL GENERAL	
G-000	COVER SHEET
G-001	SHEET INDEX AND GENERAL PROJECT INFORMATION
G-020	ACCESSIBILITY GUIDELINES
G-030	FIRE RATED ASSEMBLIES
G-100	CODE REVIEW
G-101	LEVEL 1 SCOPE PLAN
G-102	LEVEL 2 SCOPE PLAN
CIVIL	
C001	NOTES, INDEX AND LEGENDS
C002A	SURVEY (FOR INFORMATION ONLY)
C002B	SURVEY (FOR INFORMATION ONLY)
C002C	SURVEY (FOR INFORMATION ONLY)
C002D	SURVEY (FOR INFORMATION ONLY)
C003	DEMOLITION PLAN
C101	SITE PLAN
C102	DIMENSIONAL CONTROL PLAN
C103	FIRE APPARATUS & SAFETY PLAN
C201	DRAINAGE AND UTILITY PLAN
C202	DRAINAGE AREA MAP
C301	PAVING PLAN
C401	EROSION CONTROL PLAN
C501	DETAILS
C502	DETAILS
ARCHITECTURAL SITE	
AS100	OVERALL SITE PLAN
AS711	SITE DETAILS
STRUCTURAL	
S-000	3D VIEW & SHEET LIST
S-010	GENERAL NOTES
S-011	GENERAL NOTES
S-012	GENERAL NOTES
S-013	GENERAL SUBGRADE NOTES AND TYP DETAILS
S-101	FOUNDATION PLAN
S-102	SECOND FLOOR FRAMING PLAN
S-103	ROOF FRAMING PLAN
S-104	POP-UP ROOF FRAMING PLAN
S-300	GENERAL CONCRETE AND STL REINF NOTES AND TYP DETAILS
S-301	GENERAL SLAB-ON-GRADE NOTES AND TYP DETAILS
S-302	GENERAL GRADE BEAM NOTES AND TYP DETAILS
S-302A	GENERAL GRADE BEAM NOTES AND TYP DETAILS
S-303SF	GENERAL FOUNDATION NOTES AND TYP DETAILS
S-304	GENERAL FOUNDATION NOTES AND TYP DETAILS
S-310	FOUNDATION DETAILS
S-311	FOUNDATION DETAILS
S-313	FOUNDATION DETAILS (CMU)
S-314	FOUNDATION DETAILS (CMU)
S-315	ELEVATOR PIT DETAILS
S-320	SITE ITEMS FOUNDATION SECTIONS AND DETAILS
S-400	GENERAL CMU NOTES AND TYP DETAILS
S-401	GENERAL CMU NOTES AND TYP DETAILS
S-402	MISC CMU DETAILS
S-403	MISC CMU DETAILS
S-500	GENERAL STEEL NOTES AND TYP DETAILS
S-501	GENERAL STEEL NOTES AND TYP DETAILS
S-502	GENERAL STEEL NOTES AND TYP DETAILS
S-503	GENERAL STEEL CONNECTION NOTES AND TYP DETAILS
S-504	GENERAL COMPOSITE STEEL NOTES AND TYP DETAILS
S-505	GENERAL COMPOSITE STEEL NOTES AND TYP DETAILS
S-506	TYPICAL STEEL DECK DETAILS
S-507	GENERAL STEEL NOTES AND TYP DETAILS
S-508	GENERAL STEEL NOTES AND TYP DETAILS
S-509	GENERAL STEEL NOTES AND TYP DETAILS
S-510	COMPOSITE FRAMING DETAILS
S-511	COMPOSITE FRAMING DETAILS
S-512	COMPOSITE FRAMING DETAILS
S-513	COMPOSITE FRAMING DETAILS
S-520	ROOF FRAMING DETAILS
S-521	ROOF FRAMING DETAILS
S-522	ROOF FRAMING DETAILS
S-524	ROOF FRAMING DETAILS
S-600	TYPICAL WIND BRACING ELEVATIONS
S-610	TYPICAL WIND BRACING DETAILS
S-700	TYPICAL LADDER DETAILS
ARCHITECTURAL	
A-101	LEVEL 1 - FLOOR PLAN
A-102	LEVEL 2 - FLOOR PLAN
A-201	LEVEL 1 - CEILING PLAN
A-202	LEVEL 2 - CEILING PLAN
A-301	OVERALL ROOF PLAN
A-322	ROOF DETAILS
A-411	ENLARGED TOILET PLANS
A-421	ENLARGED STAIR PLANS AND SECTIONS
A-422	ELEVATOR PLANS & SECTIONS
A-501	EXTERIOR ELEVATIONS
A-601	BUILDING SECTIONS
A-621	WALL SECTIONS
A-701	PLAN DETAILS
A-711	WALL SECTIONS DETAILS
A-712	STOREFRONT DETAILS
A-801A	PARTITION TYPES
A-801B	PARTITION TYPES
A-810	DOOR SCHEDULE
A-811	DOORS - PANEL & FRAME TYPES
A-851	DOOR DETAILS
A-900	FINISH SCHEDULE
A-901	LEVEL 1 - OVERALL FINISH PLAN
A-902	LEVEL 2 - OVERALL FINISH PLAN
A-921	WALL FINISH SCHEDULE
A-951	CASEWORK AND INTERIOR ELEVATIONS
A-952	CASEWORK AND INTERIOR ELEVATIONS
A-953	CASEWORK AND INTERIOR ELEVATIONS
A-971	LOCKER AND SHELF ELEVATIONS
ARCHITECTURAL EQUIPMENT	
AQ-101	EQUIPMENT AND LOCKER PLANS
ARCHITECTURAL GRAPHICS	
AG051	SIGNAGE GRAPHIC STANDARDS
AG101	LEVEL 1 - OVERALL GRAPHICS & SIGNAGE PLAN
AG102	LEVEL 2 - OVERALL GRAPHICS & SIGNAGE PLAN

DIRTT	
DW-100.1	FLOOR PLAN - FIRST FLOOR
DW-100.2	FLOOR PLAN - LEFT FIRST FLOOR
DW-100.3	FLOOR PLAN - RIGHT FIRST FLOOR
DW-100.4	FLOOR PLAN - SECOND FLOOR
DW-100.5	FLOOR PLAN - LEFT SECOND FLOOR
DW-100.6	FLOOR PLAN - RIGHT SECOND FLOOR
DW-100.7	HIGHLIGHTED PLAN FIRST FLOOR
DW-100.8	HIGHLIGHTED PLAN SECOND FLOOR
DW-200.1	ELEVATIONS FIRST FLOOR
DW-200.2	ELEVATIONS FIRST FLOOR
DW-200.3	ELEVATIONS FIRST FLOOR
DW-200.4	ELEVATIONS FIRST FLOOR
DW-200.5	ELEVATIONS FIRST FLOOR
DW-200.6	ELEVATIONS FIRST FLOOR
DW-200.7	ELEVATIONS FIRST FLOOR
DW-200.8	ELEVATIONS SECOND FLOOR
DW-200.9	ELEVATIONS SECOND FLOOR
DW-200.10	ELEVATIONS SECOND FLOOR
DW-200.11	ELEVATIONS SECOND FLOOR
DW-200.12	ELEVATIONS SECOND FLOOR
DW-200.13	ELEVATIONS SECOND FLOOR
DW-200.14	ELEVATIONS SECOND FLOOR
DW-200.15	ELEVATIONS SECOND FLOOR
DW-300.1	INTERSECTION DETAILS & DOOR SCHEDULE FIRST FLOOR
DW-300.2	INTERSECTION DETAILS & DOOR SCHEDULE FIRST FLOOR
DW-400.1	TYPICAL WALL DETAILS
DW-400.2	TYPICAL WALL DETAILS
DW-500.1	CEILING EFFICIENCIES FIRST FLOOR
DW-500.2	CEILING EFFICIENCIES FIRST FLOOR
DW-500.3	CEILING EFFICIENCIES SECOND FLOOR
DW-500.4	CEILING EFFICIENCIES SECOND FLOOR
MECHANICAL	
M-001	MECHANICAL GENERAL NOTES AND LEGENDS
M-101	1ST FLOOR MECHANICAL PLAN
M-102	2ND FLOOR MECHANICAL PLAN
M-201	MECHANICAL ENLARGED PLANS
M-301	ROOF MECHANICAL PLAN
M-501	MECHANICAL SCHEDULES
M-502	MECHANICAL SCHEDULES
M-601	MECHANICAL DETAILS
M-602	MECHANICAL DETAILS
M-603	MECHANICAL DETAILS
ELECTRICAL	
E-000	ELECTRICAL SYMBOL LEGEND AND GENERAL NOTES
EDS-101	ELECTRICAL DEMO SITE PLAN
ES-101	ELECTRICAL SITE PLAN
E-101	1ST FLOOR POWER PLAN
E-102	2ND FLOOR POWER PLAN
E-201	1ST FLOOR LIGHTING PLAN
E-202	2ND FLOOR LIGHTING PLAN
E-301	ELECTRICAL ROOF PLAN
E-501	ELECTRICAL ONE-LINE DIAGRAM
E-502	ELECTRICAL RISER DIAGRAM
E-601	ELECTRICAL LIGHTING FIXTURE AND CONTACTOR SCHEDULE
E-602	ELECTRICAL DETAILS
E-701	ELECTRICAL PANEL SCHEDULES
E-702	ELECTRICAL PANEL SCHEDULES
PLUMBING	
P-000	PLUMBING COVER SHEET
PS-101	PLUMBING SITE PLAN
PU-101	1ST FLOOR PLUMBING UNDERFLOOR PLAN
P-101	1ST FLOOR PLUMBING PLAN
P-102	2ND FLOOR PLUMBING PLAN
P-301	PLUMBING ROOF PLAN
P-501	PLUMBING SCHEDULES
P-601	PLUMBING DETAILS
P-701	PLUMBING RISER DIAGRAM
P-602	PLUMBING DETAILS
TECHNOLOGY	
T-001	TECHNOLOGY SYSTEM NOTES AND LEGENDS
TS-101	TECHNOLOGY SITE PLAN
TF-101	1ST FLOOR FIRE ALARM PLAN
TF-102	2ND FLOOR FIRE ALARM PLAN
TN-101	1ST FLOOR TECHNOLOGY PLAN
TN-102	2ND FLOOR TECHNOLOGY PLAN
T-401	TECHNOLOGY ENLARGED
T-501	TECHNOLOGY RISER DIAGRAMS
T-701	TECHNOLOGY DETAILS
T-702	TECHNOLOGY DETAILS
T-703	TECHNOLOGY DETAILS - AV ONE-LINE DRAWINGS
T-704	TECHNOLOGY DETAILS - AV ONE-LINE DRAWINGS

PBK
www.pbk.com
TX FIRM: BR 1608
HOUSTON, TX
713-965-0608

PKG 3A - GPHS NEW FIELDHOUSE

1000 Keene St.
Galena Park, TX 77547

CLIENT PROJECT NO: 240539

ISSUE FOR PROPOSAL

Galena Park ISD
GP
TO CHANGE ALL FOR ALL KIDS

REGISTERED ARCHITECT
JAN LEPICOVSKY
25572
STATE OF TEXAS

6/10/2025

CLIENT	
Galena Park ISD	
DATE: June 10, 2025	PROJECT NUMBER: 240539

DRAWING HISTORY

No.	Description	Date

CHECKED BY: Checker
DRAWN BY: SY + Isabela Esparza

SHEET INDEX AND GENERAL PROJECT INFORMATION

G-001

Plot Stamp:
6/10/2025 5:46:13 PM

ACCESSIBILITY GUIDELINES
G-020

FOR BLUEBEAM LABELINGDOOR:

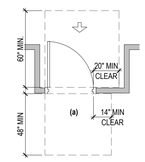

13 DOOR CLEARANCE
1/4" = 1'-0"

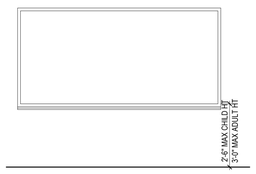

12 TYP. MARKERBOARD MOUNTING HEIGHT
3/8" = 1'-0"

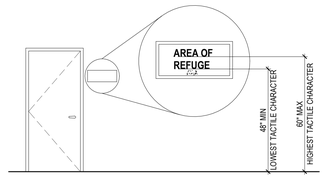

11 SIGNAGE WITH TACTILE MOUNTING HEIGHT
N.T.S.

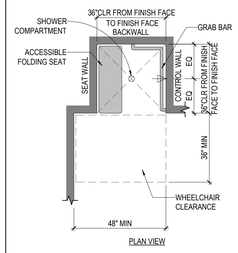

10 TYP SHOWER COMPARTMENT
3/8" = 1'-0"

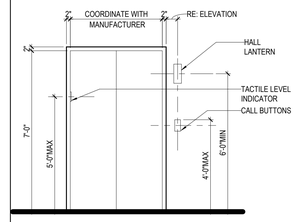

8 TYP ELEVATOR DOOR
3/8" = 1'-0"

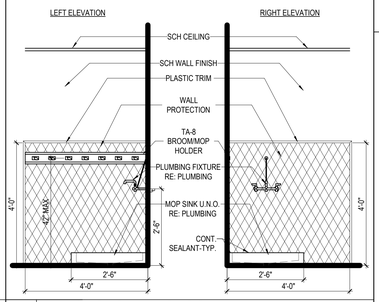

2 TYP CUSTODIAL CLOSET
1/2" = 1'-0"

GENERAL ACCESSIBILITY GUIDELINES NOTES

1. VERIFY AND INSTALL ALL ACCESSORIES AT HEIGHTS TO COMPLY WITH ALL APPLICABLE ACCESSIBILITY REQUIREMENTS. IN THE EVENT OF CONFLICT BETWEEN DATA SHOWN ON ELEVATIONS AND DATA PROVIDED ON THIS SHEET, THIS SHEET SHALL GOVERN THE DETAILS AND TAKE PRECEDENCE OVER DATA ON ELEVATIONS.
2. THE FORCE FOR PUSHING OR PULLING OPEN A DOOR OR GATE OTHER THAN FIRE DOORS SHALL BE:
   FIVE POUNDS MAXIMUM FOR INTERIOR HINGED DOORS AND GATES.
   FIVE POUNDS MAXIMUM FOR SLIDING OR FOLDING DOORS.
3. PRIOR TO INSTALLATION OF ANY OWNER FURNISHED, CONTRACTOR INSTALLED (OFCI) ITEMS, THE CONTRACTOR SHALL REQUEST CUTSHEETS FROM OWNER TO CONFIRM DIMENSIONS WITH ARCHITECT.

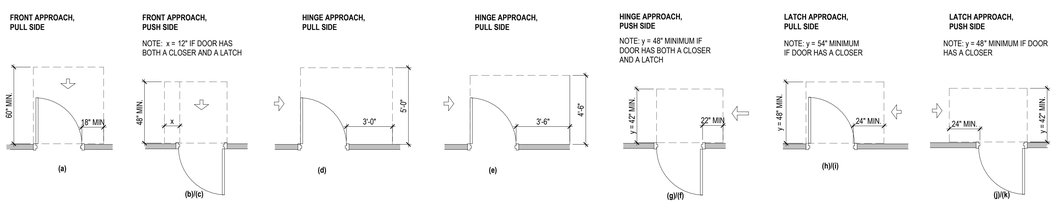

2012 TAS 404.2.4.1 MANEUVERING CLEARANCES AT MANUAL SWINGING DOORS AND GATES

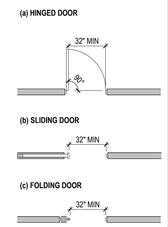

2012 TAS 404.2.3 CLEAR WIDTH OF DOORWAYS

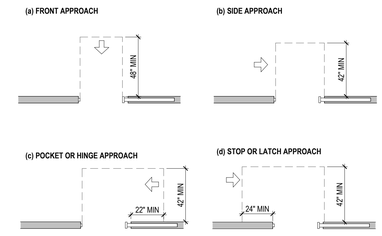

2012 TAS 404.2.4.2 MANEUVERING CLEARANCES AT DOORWAYS WITHOUT DOORS, SLIDING DOORS, GATES AND FOLDING DOORS

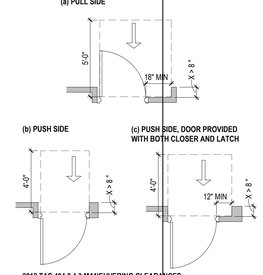

2012 TAS 404.2.4.3 MANEUVERING CLEARANCES AT RECESSED DOORS AND GATES

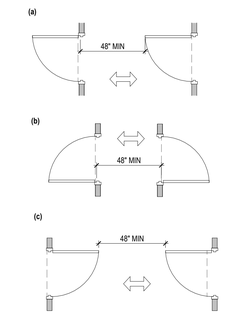

2012 TAS 404.2.6 DOORS IN SERIES AND GATES IN SERIES

ACCESSIBLE ROUTES & DOOR APPROACH CLEARANCES

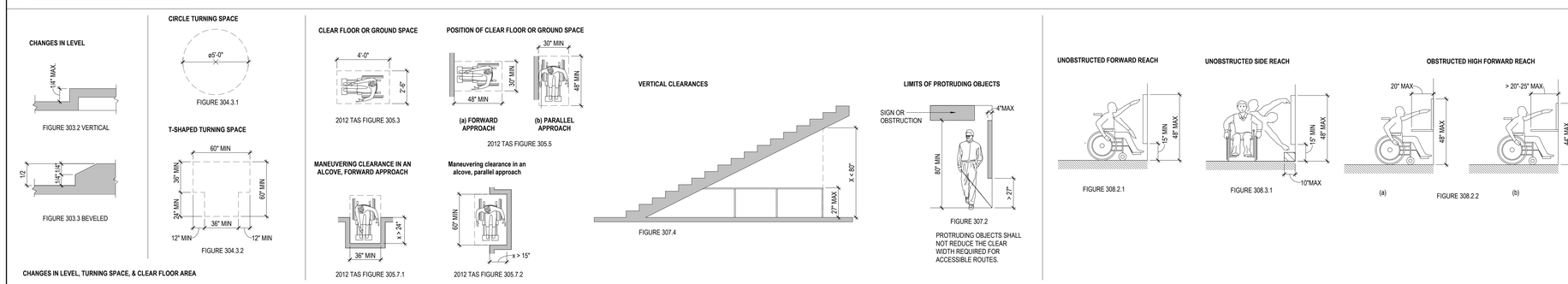

4 TEXAS ACCESSIBILITY STANDARDS
1/4" = 1'-0"

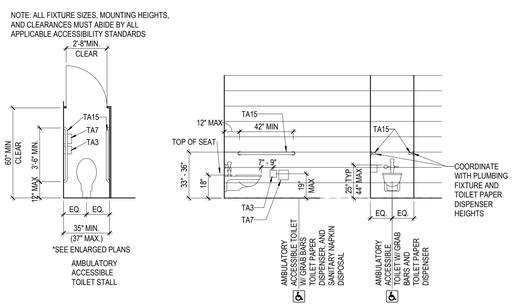

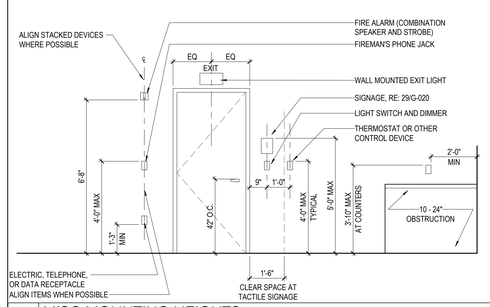

7 MISC MOUNTING HEIGHTS
3/8" = 1'-0"

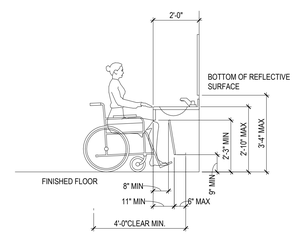

1 ACCESSIBLE VANITY
3/8" = 1'-0"

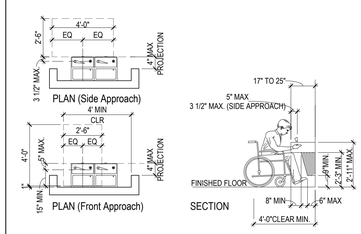

6 DRINKING FOUNTAIN GUIDELINE
1/4" = 1'-0"

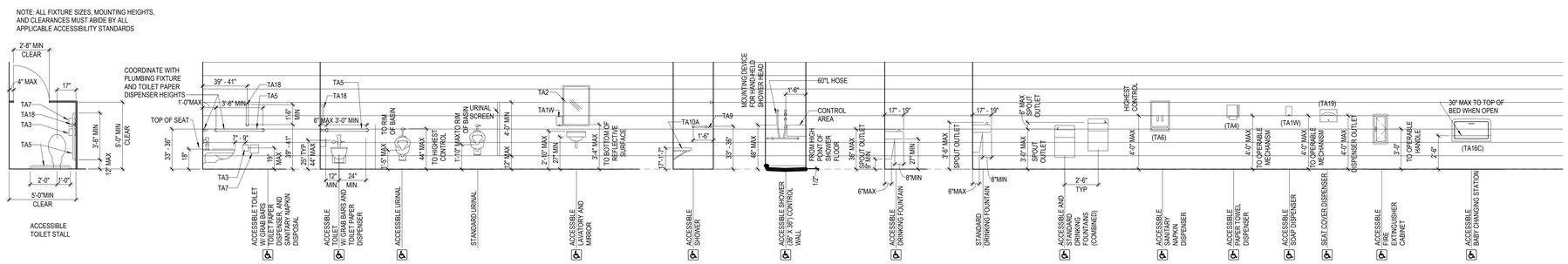

3 ACCESSIBILITY - AGES 13 THRU ADULT (GRADES 8 AND ABOVE)
1/4" = 1'-0"

DESCRIPTION	Ages: 13 - Adult (Grades 8 and Above)
WATER CLOSET: To Top of Seat	17" - 19"
Grab Bar Height	33" - 36"
Flush Control Height	25" TYP 44" MAX
URINAL: Max. To Rim of Basin	17"
Flush Control Height (Max)	44"
LAVATORIES: Front Approach	
Knee Clearance (Min)	27"
To Top (Max)	34"
To Faucet (Max)	25"
FIXED OR BUILT-IN:	
Height of Tables or Counter:	28" - 34"
Knee Clearance (Min)	27"
SHELVES, DISPENSERS: Max. Height to Control Device	
Frontal Approach (Max)	48"
Side Approach (Max)	48"
DRINKING FOUNTAINS:	
To Spout (Max)	36"
Knee Clearance (Min)	27"
SWITCHES AND CONTROLS	
Frontal Approach (Max)	48"
Side Approach (Max)	48"
MIRRORS: Max. Height to Bottom of Reflective Surface	
At Lavatories and Counter Tops	40"
Full Length	35"
MIRRORS: Min. Height to Top of Reflective Surface	
Full Length	74"
TOILET PAPER DISPENSER: Height to Center of Roll (Max)	19"
PAPER TOWEL DISPENSER: Height to Operating Mechanism	48"
SHOWER	
Top of Seat	17" - 19"
Grab Bar	33" - 36"
To Hand Shower Head Mounting (Max)	48"
MARKER BOARDS / TACKBOARDS	COORD. MOUNTING HEIGHT WITH OWNER PRIOR TO INSTALL

5 ACCESSIBILE MOUNTING HEIGHTS
1/4" = 1'-0"

PBK

www.pbk.com
TX FIRM: BR 1608
HOUSTON, TX
713-965-0608

PKG 3A - GPHS NEW FIELDHOUSE

1000 Keene St.
Galena Park, TX 77547

CLIENT PROJECT NO: 240539

ISSUE FOR PROPOSAL

KEY PLAN
NORTH: PLAN TRUE

REGISTERED ARCHITECT
JAN LEGG
13872
STATE OF TEXAS

6/10/2025

CLIENT	
Galena Park ISD	
DATE June 10, 2025	PROJECT NUMBER 240539

DRAWING HISTORY

No.	Description	Date

CHECKED BY: Checker

DRAWN BY: Author

ACCESSIBILITY GUIDELINES

G-020

Plot Stamp:
6/10/2025 5:34:11 PM

FIRE RATED ASSEMBLIES
G-030

FOR BLUEBEAM LABELING/OCR:

Design No. P921

Restrained Assembly Rating—1, 1 1/2 or 2 Hr (See Items 4, 6, 7 and 9)
Unrestrained Assembly Rating—0 Hr (See Item 7)
Unrestrained Beam Rating—1, 1 1/2 or 2 Hr (See Items 4, 6, 7 and 9)

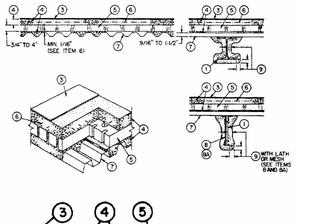

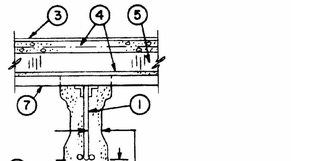

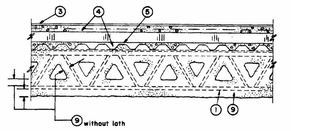

1. **Supports**—W6X16 or W8X10 beam. As alternate to steel beams, Joist girders—(Not shown)—20 in. min depth and 13 lb/lin ft min weight.
1A. **Steel Joists**—12K5 or heavier steel joist may be used as secondary support.
2. **Bridging Angles**—(Not shown)—1-1/4 by 1-1/4 by 1/8 in. thick angles for use with steel joists. Angles welded to top and bottom chords of the joists.
3. **Roof Covering***—Consisting of hot mopped or cold application materials compatible with insulation(s) described herein which provide Class A, B or C coverings. See Roofing Materials and Systems Directory-Roof Covering Materials (TEVT).
3A. In lieu of Item 3, roof covering consisting of single-ply **Roofing Membrane*** that is either ballasted, adhered or mechanically attached as permitted under the respective manufacturer's Classification. See Fire Resistance Directory—Roofing Membranes (CHCI).
4. **Vermiculite Concrete**—6 cu ft of **Vermiculite Aggregate*** to 94 lb of Portland cement and 0.11 lb of air entraining agent mixed with approx 25 gal of water. Min compressive strength shall be 125 psi when tested in accordance with ASTM C495. Min thickness above foamed plastic is 2 in. Min thickness between top of steel deck and bottom of foamed plastic shall be 1/16 in. when wire mesh (Item 6) is used and 1/8 in. when the wire mesh is not used. When foamed plastic (Item No. 5 or 5A) is not used the topping thickness of Vermiculite Concrete over the crests of steel deck shall be a min of 2-3/16 in. for the 1 and 1-1/2 h ratings and 2-3/8 in. for the 2 h rating. The max vermiculite concrete thickness shall be determined by job site conditions.
   Mandoval Ltd.
   Mandoval Vermiculite Products, Inc.
   Palmetto Vermiculite Co., Inc.
   Siplast Inc.
   Strong-Lite Products Corp.
   Vermiculite Products, Inc.
4A. **As an alternate to Item 4, Cellular Concrete —Roof Topping Mixture***—Foam concentrate mixed with water and Portland cement per manufacturer's specifications. Cast dry density and 28-day compressive strength of min 190 psi as determined in accordance with ASTM C495-66. Min thickness above foamed plastic is 2 in. Min thickness between the top of steel deck and the bottom of foamed plastic shall be 1/8 in. When foamed plastic is not used, the min thickness of Roof Topping Mixture* above the top of the steel deck shall be 2-3/4 in.
   Celcore Inc.—Cast dry density of 31 (+ or -) 3.0 pcf.
   Cellufoam Concrete Systems—Cast dry density of 30 (+ or - 3.0) pcf.
   Elastizell Corp. of America—Type II. Mix #1 of cast dry density 39 (+ or -) 3.0 pcf, Mix #2 of cast dry density 40 (+ or -) 3.0 pcf, Mix #3 of cast dry density 47 (+ or -) 3.0 pcf.
   Lite-Crete, Inc.—Cast dry density of 29 (+ or -) 3.0 pcf.
   Mearl Corp., The—Cast dry density 37 (+ or -) 3.0 pcf.
   Siplast Inc.—Mix #2. Cast dry density of 36 (+ or -) 3.0 pcf.
4B. **As an alternate to Item 4**—Perlite Concrete—Mix consists of 6 cu ft of **Perlite Aggregate*** to 94 lb of Portland cement and 1-1/2 pints of air-entraining agent. Thickness of perlite concrete topping to be 2 in. min from the top plane of the foamed plastic. Min thickness between the top of steel deck and the bottom of the foamed plastic shall be 1/8 in.
   See Perlite Aggregate (CFFX) category in Fire Resistance Directory for names of Classified companies.
4C. **As an alternate to Item 4**—Cellular Concrete—Roof Topping Mixture*—Foam Concentrate mixed with water, Portland Cement and UL Classified Vermiculite Aggregate per manufacturer's application instructions. Cast dry density of 33 (+ or -) 3.0 pcf and 28-day compressive strength of min 250 psi as determined in accordance with ASTM C495-86. A 1/8 in. min slurry coat shall be employed below the foamed plastic (Item 5). The cellular concrete topping thickness, above the foamed plastic, shall be 2 in. min. When foamed plastic is not used, the min thickness of Roof-Topping Mixture, above the top of the steel deck, shall be 2-3/4 in.
   Siplast Inc.—Mix #3.
   The Mearl Corp.—Mix #3.
5. **Foamed Plastic***(Optional)—Foamed plastic insulation boards with holes and/or slots. Nom size 24 by 48 in. Thickness shall be 3/4 in. to 8 in.
   Siplast Inc.
   Vermiculite Products, Inc.
5A. **Foamed Plastic***—Nom 24 by 48 in., 48 by 48 in. or 30 by 60 in. by max 8 in. thick polystyrene foamed plastic insulation boards with holes symetrically placed having a max density of 2.0 pcf. For use only with cellular concrete roof topping mixture.
   Starrfoam Manufacturing, Inc.
5B. **Foamed Plastic***(Optional)—Nom 24 x 48 by max 8 in. thick polystyrene foamed plastic insulation boards having a density of 2.5 pcf max. Each insulation board shall contain six nom 3 in. diam holes oriented in two rows of three holes each, with the holes spaced 12 in. OC transversely and 16 in. OC longitudinally.
   See Foamed Plastic* (BRYX) category in the Building Materials Directory or **Foamed Plastic* (CCVW)** category in Fire Resistance Directory for list of Classified Companies.
6. **Wire Mesh**—No. 19 SWG galv steel wire twisted to form 2 in. hexagons. In addition, straight No. 16 SWG galv steel wire woven into mesh and spaced 3 in. apart for stiffness. Mesh installed without attachment perpendicular to supports and overlapped 6 in. at the sides. As an alternate, 4 by 8 in., No. 12/14 SWG or 2 by 2 in., No. 14/14 SWG welded wire fabric may be used. The wire mesh may be omitted for the **1 and 1-1/2 h Restrained Assembly and Beam Ratings** only. Thickness of vermiculite concrete between the top of the roof deck and the bottom of the foamed plastic insulation shall be 1/8 in. min when wire mesh is not used.
7. **Steel Roof Deck**—(Unclassified)—Noncomposite design, vented or nonvented units, 9/16 in., 15/16 in., 1-5/16 in., 1-1/2 or 2 in. deep galv units, nom 24 to 36 in. wide. When vented or nonvented 9/16 in. deep galv units are used, the **Restrained Assembly and Beam Ratings shall not exceed 1-1/2 h.** Welded to supports with 3/8 in. puddle welds through weld washers spaced 15 in. O. C. Adjacent units overlapped one corrugation. Max support spacings 8 ft O.C. unless otherwise noted for specific Classified units and their recommended loadings. Steel thickness to be No. 24 MSG min when supports are spaced not more than 8 ft 0. C., No. 26 MSG min when supports are spaced not more than 6 ft 0. C., and No. 28 MSG, 9/16 in. deep steel deck may be used when supports are spaced 4 ft. 0. C. Roof deck units to be loaded not more than 75 percent of their max allowable bending stress. For clear spans not more than 7 ft., 8-3/8 in. the **Unrestrained Assembly Rating is equal to the Restrained Assembly Rating.** Or, **Classified Steel Floor and Form Units*** conforming to the same installation, steel thickness, loading requirements and **Restrained Assembly Rating** as described for unclassified units.
   BHP Steel Building Products USA Inc.—Types CP32, (1-3/8), B, Ventform and 2W. Two or three—10 ft—0 in. continuous spans may be used for Types B or 2W units, and 12 ft—0 in. simple or continuous spans may be used for Type N units, provided that the total loading on these spans is based on the allowable steel stress and the deflection limitation criteria using the steel (noncomposite) section properties of these units.
   Bowman Metal Deck/Wheeling Corrugating Co. Div of Wheeling-Pittsburgh Steel Corp.—Nonvented Types B, FM-2, Strongfoam SF-3, SF-4, SF-5; vented Types B, FM-2, SV-3, SV-4, SV-5. Types SF-4/SV-4 units may be used for a max 10 ft, 0 in. spans. Types SF-5/SV-5 units made from 24 MSG steel may be used for a max 10 ft, 6 in. spans. Types SF-5/SV-5 units made from 22 ga or heavier steel may be used for max 12 ft, 0 in. spans.
   Consolidated Systems, Inc.—Consoliform and Convent Types EHD, HD, S, SD. -Media-Dek Type 1 (vented and nonvented) and Media-Dek Type 2, Type R.
   Deck West, Inc.—36 in. wide Type B-DW, BA-DW or 3-DW. The Type 3-DW units made from 22 ga or heavier steel may be used for a maximum 10 ft., 0 in. spans, provided that the total loading on these spans is based on the allowable steel stresses and the deflection limitation criteria using the steel (noncomposite) section properties of these units.
   Epic Metals Corp.—Type Metricform.
   Marlyn Steel Decks, Inc.—Types B, BV, EF, EVF, F, HF, HVF, SF, SVF.
   Robertson, H. H.—Type QL-3 or Sec. 3 with or without up-punched integral hanger tabs, and 3 in. QL-99. The 3 in. deep Type QL-99 units made from 22 ga or heavier steel may be used for max 10 ft, 0 in. spans, provided the total loading on these spans is based on the allowable steel stresses and the deflection limitation criteria using the steel (noncomposite) section properties of these units.
   Roll Form Products, Inc.—"Permaform" Type H.
   Roof Deck, Inc.—Vented or Nonvented Types EHD Multi-Rib, HD Multi-Rib, S Multi-Rib.
   Toman Building Components Inc. —24, 30 or 36 in. wide, Types LXR-B; 30 in. wide, types LXR-B-N-30 and LXR-B-N-30-I; 35 in. wide, Types LXR-B-35 and LXR-B-35-I.
   United Steel Deck, Inc.—Types B, UFX, UFXV, UFX-36, UFXV-36.
   Verco Manufacturing Inc.—Types B, 2"B, 2"B Ventlok, Vercor, Vercor-Ventlok, W-2, System 80 and N. Two or three 10 ft 0 in. continuous spans may be used for the following units under the following conditions: (A) For Types B and W-2 units the total loading on these spans shall be based on the allowable steel stress or the deflection limitation criteria using the steel (noncomposite) section properties of these units. (B) For System 80 the min gauge of units is 18 MSG and use is limited to three continuous spans. (C) For 2"B and 2"B Ventlok the total loading on these spans shall be limited to 80 percent of the allowable steel bending stress, or the deflection limitation criteria.

Type N deck may be used on simple or continuous 12 ft 0 in. spans with the total loading on these spans limited by the allowable bending stress and/or the deflection limitation criteria.
   Vulcraft, Div. of Nucor Corp.—Types 0.6C, 0.6CPR, 0.6CPRV, 0.6CSV, 1.0C, 1.0CSV, 1.3C, 1.3CSV, 1.5C, 2C, 3C, 1.5B, 1.5BI, 3N, 3NI. Type 1.5B units made from 21MSG or heavier steel may be used on simple or continuous 10 ft 0 in. spans with the total load on these spans limited by the allowable bending stress and/or the deflection criteria of this deck. Type 3N made from 22MSG or heavier steel may be used on simple or continuous 12 ft 0 in. spans with the total load on these spans limited by the allowable bending stress and/or the deflection criteria of this deck.
   Wheeling Corrugating Co., Div of Wheeling-Pittsburgh Steel Corp.—Types B, BW, F, TF-50, TF-75, TF-125, TF-H3, TV-50, TV-75, TV-125, TV-H3,.Permaform Type H.
8. **Metal Lath**—(Optional)—Metal lath is used to facilitate the spray application of Spray-Applied Fire Resistive Materials on steel bar joists and trusses. The diamond mesh, 3/8 in. expanded steel lath, 1.7 to 3.4 lb per sq yd, is secured to one side of each steel joist with No. 18 SWG galv steel wire at joist web and bottom chord members, spaced 15 in. OC max. When used, the metal lath is to be fully covered with Spray-Applied Fire Resistive Materials with no min thickness requirements.
8A. **Non-Metallic Fabric Mesh**—(Optional)—As an alternate to metal lath, glass fiber fabric mesh, weighing approximately 2.5 oz per sq yd, polypropylene fabric mesh, weighing approximately 1.25 oz per sq yd or equivalent, is used to facilitate the spray application. The mesh is secured to one side of each joist web member. The method of attaching the mesh must be sufficient to hold the mesh and the spray-applied Spray-Applied Fire Resistive Materials material in place during application until it has cured. An acceptable method to attach the mesh is by embedding the mesh in minimum 1/4 in. long beads of hot melted glue. The beads of glue shall be spaced a maximum of 12 in. O.C. along the top chord of the bar joist. Another method to secure the mesh is by 1-1/4 in. long by 1/2 in. wide hairpin clips formed from No. 18 SWG or heavier steel wire.
9. **Spray-Applied Fire Resistive Materials***—Applied by mixing with water and spraying in more than one coat to the final thickness shown below to joist or beam surfaces which are clean, free of dirt, loose scale and oil. A 1-3/4 in. thickness of Spray-Applied Fire Resistive Materials shall be applied to the bridging bars. Min avg and min ind density of 15/14 pcf respectively. For method of density determination refer to Design Information Section.

Restrained Assembly Rating, HR	Unrestrained Beam Rating, HR	Thickness (In.) Min Tkns on Beam W6x16	W8x10	Min Tkns on Joist (No. Lath)	Min Tkns on Joist (with Lath)
1	1	1	1-3/8	1-1/2+	1-1/2+
1-1/2	1-1/2	1-1/4	1-3/4	2-1/4	1-3/4
2	1-1/2	1-3/8	1-7/8	2-1/4	1-3/4
2	2	1-5/8	2-1/4	2-7/16	1-7/8

   Construction Products Div., W. R. Grace & Co. of Canada Ltd.—Type MK-5.
   Grace Construction Products—Types MK-4, MK-5, MK-6/HY, MK-6S, RG
   Grace Korea Inc.—Types MK-6/CBF, MK-6/ED, MK-6/HY, MK-6S
   Pyrok Inc.—Type LD.
   Southwest Vermiculite Co., Inc.—Types 4, 5, 5EF, 5GP, 5MD, 8EF, 8GP, 8MD, 9EF, 9GP, 9MD.
   Vermiculite Products, Inc.—Type MK-5, VP5.
   +For 1 Hr ratings, the min joist size shall be 1437.
9A. **Spray-Applied Fire Resistive Materials***—(Not Shown) —In lieu of Item 9 the following Spray-Applied Fire Resistive Materials may be applied by mixing with water and spraying in multiple coats to final thicknesses shown below. Min avg and min ind density 19/18 pcf respectively for Types 7GP, 105. Min avg and min ind density of 22/19 pcf respectively for Types KM-601, Z-106. For method of density determination, refer to Design Information Section, Sprayed Material.

Restrained Assembly Rating, Hr.	Unrestrained Beam Rating, Hr.	Min Tkns on Beam, In W6X16	W8X10
1	1	1-1/16	1-1/2
1-1/2	1-1/2	1-3/8	1-15/16
2	1-1/2	1-1/2	2-1/16
2	2	1-13/16	2-9/16

   Grace Construction Products—Types 105, KM-601, Z-106.
   Grace Korea Inc.—Type Z-106.
   Southwest Vermiculite Co., Inc.—Type 7GP.
9B. **Spray-Applied Fire Resistive Materials***—(Not Shown) —In lieu of Item 9 or 9A the following Spray-Applied Fire Resistive Materials may be applied by mixing with water and spraying in multiple coats to final thicknesses shown below. Min avg and min ind density 40/36 pcf respectively. For method of density determination, refer to Design Information Section, Sprayed Material.

Restrained Assembly Rating, Hr.	Unrestrained Beam Rating, Hr.	Min Tkns on Beam, In W6X16	W8X10
1	1	1-1/16	1-1/2
1-1/2	1-1/2	1-3/8	1-15/16
2	1-1/2	1-1/2	2-1/16
2	2	1-13/16	2-9/16

02 UL DESIGN NO. P921
12" = 1'-0"

Design No. U465

Nonbearing Wall Rating—1 HR.

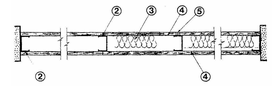

1. **Floor and Ceiling Runners**—(not shown)—Channel shaped runners, 3-5/8 in. wide (min), 1-1/4 in. legs, formed from No. 25 MSG (min) galv steel, attached to floor and ceiling with fasteners spaced 24 in. OC max.
2. **Steel Studs**—Channel shaped, 3-5/8 in. wide (min), 1-1/4 in. legs, 3/8 in. folded back returns, formed from No. 25 MSG (min) galv steel spaced 24 in. OC max.
3. **Batts and Blankets***—(Optional)—Mineral wool or glass fiber batts partially or completely filling stud cavity.
   See Batts and Blankets (BZJZ) category for names of Classified companies.
4. **Wallboard, Gypsum***—5/8 in. thick, 4 ft wide, attached to steel studs and floor and ceiling track with 1 in. long, Type S self-tapping steel screws spaced 8 in. OC along edges of board and 12 in. OC in the field of the board. Joints oriented vertically and staggered on opposite sides of the assembly. When attached to item 6 (furring channels), wallboard is screw attached to furring channels with 1 in. long, type S steel screws spaced 12 in. OC.
   American Gypsum Co.—Type AG-C.
   Boral Gypsum Inc.—Type BG-C.
   Canadian Gypsum Company—Types AR, C, IP-X2, SCX, SHX, WRC or WRX.
   Continental Gypsum Company—Types CG-C, CG5-5, CG6-6, CG9-9, CGTC-C.
   G-P Gypsum Corp.—Types 5, 9, C, GPF56.
   Lafarge Gypsum, A Div. of Lafarge Corp.—Types LGFC6, LGFC-C.
   National Gypsum Co., Charlotte, NC—Types FSK-G, FSW-G.
   National Gypsum Co., Riyadh, Saudi Arabia—Type FR or WR.
   Pabco Gypsum Co.—Type PG-C.
   Republic Gypsum Co.—Type RG-C.
   Standard Gypsum Corp.—Type SG-C.
   Temple-Inland Forest Products Corp.—Type TG-C.
   United States Gypsum Co.—Type AR, C, IP-X2, SCX, SHX, WRC or WRX.
   Yeso Panamericano SA de CV—Type AR, C, IP-X2, SCX, SHX, WRC or WRX.
   Westroc Inc.—Type Westroc Fireboard.
4A. **Wallboard, Gypsum***—(As an alternate to Item 4)—Nom 3/4 in. thick, 4 ft wide, installed as described in Item 4 with screw length increased to 1-1/4 in..
   Canadian Gypsum Company—Type AR.
   United States Gypsum Co.—Type AR.
   Yeso Panamericano SA de CV—Type AR.
4B. **Wallboard, Gypsum***—(As an alternate to Items 4 and 4A) —5/8 in. thick installed as described in Item 4. Joint covering (Item 5) not required.
   Canadian Gypsum Company—Type WSX.
   United States Gypsum Co.—Type WSX.
   Yeso Panamericano SA de CV—Type WSX.
5. **Joint Tape and Compound**—Vinyl, dry or premixed joint compound, applied in two coats to joints and screw heads; paper tape, 2 in. wide, embedded in first layer of compound over all joints. As an alternate, nominal 3/32 in. thick gypsum veneer plaster may be applied to the entire surface of Classified veneer baseboard. Joints reinforced.
6. **Furring Channel**—(Optional-Not Shown)—Resilient 25 MSG galv steel furring channels spaced vertically max 24 in. OC, flange portion attached to each intersecting stud with 1/2 in. long type S-12 panhead steel screws.

*Bearing the UL Classification Marking

06 UL DESIGN NO. U465
12" = 1'-0"

Design No. U905

Bearing Wall Rating—2 HR.
Nonbearing Wall Rating—2 HR

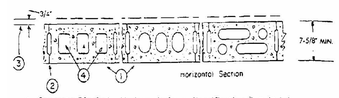

1. **Concrete Blocks***—Various designs. Classification D-2 (2 hr).
   See **Concrete Blocks** category for list of eligible manufacturers.
2. **Mortar**—Blocks laid in full bed of mortar, nom. 3/8 in. thick, of not less than 2-1/4 and not more than 3-1/2 parts of clean sharp sand to 1 part Portland cement (proportioned by volume) and not more than 50 percent hydrated lime (by cement volume). Vertical joints staggered.
3. **Portland Cement Stucco or Gypsum Plaster**—Add 1/2 hr to classification if used. Where combustible members are framed in wall, plaster or stucco must be applied on the face opposite framing to achieve a max. Classification of 1-1/2 hr. Attached to concrete blocks (Item 1).
4. **Loose Masonry Fill**—If all core spaces are filled with loose dry expanded slag, expanded clay or shale (Rotary Kiln Process), water repellant vermiculite masonry fill insulation, or silicone treated perlite loose fill insulation add 2 hr to classification.
5. **Foamed Plastic***—(Optional-Not Shown)—1-1/2 in. thick max, 4 ft wide sheathing attached to concrete blocks (Item 1).
   Celotex Corp.—Type Thermax

*Bearing the UL Classification Marking

05 UL DESIGN NO. U905
12" = 1'-0"

Design No. X771

Ratings—3/4, 1, 1-1/2, 2, 3 and 4 h

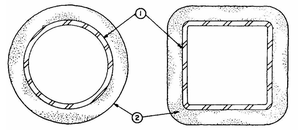

1. **Steel Pipe or Tube Column**—Steel circular pipe with diameter (OD) ranging from a minimum of 3 in. to a maximum of 32 in. with a minimum wall thickness of 3/16 in.
   Steel square or rectangular tube with outside wall dimensions ranging from a minimum 3 in. to a maximum of 32 in. and a minimum wall thickness of 3/16 in.
   The A/P ratio of the steel pipe or tube (see Item 2) shall range from 0.18 to 2.0.
2. **Spray-Applied Fire Resistive Materials***—Applied by mixing with water and spraying in one or more coats to steel surfaces which must be clean and free of dirt, loose scale and oil. Min avg and ind density of 15/14 pcf respectively. For method of density determination, see Design Information Section, preceding these designs.
   The hourly rating of the structural member is dependent upon the ratio of A/P and the thickness of Spray-Applied Fire Resistive Materials, where A is the cross sectional area of the pipe or tube and P is the heated perimeter.
   The A/P ratio of a circular pipe is determined by:

$$A/P\ pipe = \frac{t(d-t)}{d}$$

Where:
   d is the outer diameter of the pipe (in.)
   t is the wall thickness of the pipe (in.)
   The A/P ratio of a rectangular or square tube is determined by:

$$A/P\ tube = \frac{t(a+b-2t)}{a*b}$$

Where:
   a is the outer width of the tube (in.)
   b is the outer length of the tube (in.)
   t is the wall thickness of the tube (in.)
   The thickness of Spray-Applied Fire Resistive Materials for ratings of 3/4, 1, 1-1/2, 2, 3 and 4 h of a steel pipe or tube can be determined by the equation:

$$h = \frac{R - 0.20}{4.43\ (A/P)}$$

Where:
   R is the hourly rating (hrs).
   h is the thickness of Spray-Applied Fire Resistive Materials, minimum 1/4 in., maximum 3-7/8 in.
   Construction Products Div. W. R. Grace & Co. of Canada Ltd.—Types MK-4, MK-5.
   Grace Construction Products—Types MK-4, MK-5, MK-6/CBF, MK-6/ED, MK-6/HY, MK-6s, RG.
   Grace Korea Inc.—Types MK-6/CBF, MK-6/ED, MK-6/HY, MK-6s.
   Pyrok Inc.—Type LD.
   Southwest Vermiculite Co., Inc.—Types 4, 5, 5EF, 5GP, 5MD, 8EF, 8GP, 8MD, 9EF, 9GP, 9MD.
   Vermiculite Prods. Inc.—Types MK-4, MK-5.

*Bearing the UL Classification Marking

04 UL DESIGN NO. X771
12" = 1'-0"

Design No. X772

Ratings—1, 1-1/2, 2, 3 and 4 h.

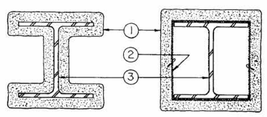

1. **Spray-Applied Fire Resistive Materials***—Applied by mixing with water and spraying in more than one coat to the thicknesses shown below, to steel surfaces which are clean and free of dirt, loose scale, and oil. Min avg and min ind density of 15/14 pcf respectively. For method of density determination, see Design Information Section, Sprayed Material.
   The thickness of Spray-Applied Fire Resistive Materials to be applied to all surfaces of the column (Item 1) required for rating periods of 1 h, 1-1/2 h, 2 h, 3 h, 4 h may be determined by the equation:

$$h = \frac{R}{1.05\ (W/D) + 0.61}$$

Where:
   h = Spray-Applied Fire Resistive Materials thickness in the range 0.25-3.875 in..
   R = Fire resistance rating in hours (1 - 4 h)
   D = Heated perimeter of steel column in inches
   W = Weight of steel column in lbs per foot
   W/D = 0.33 to 6.62

As an alternate to the equation, the minimum thickness of Spray-Applied Fire Resistive Materials required for various fire resistance ratings of contour sprayed or boxed columns may be determined from the table below:

Min Column Size	W/D	Min Thk (In) 1 h	1-1/2 h	2 h	3 h	4 h
W6X9	0.33	1-1/8	1-1/2	2	2-1/2	3-1/8
W6x16	0.57	13/16	1-1/4	1-11/16	2-1/2	3-5/16
W8x28	0.67	3/4	1-3/16	1-3/8	2	2-11/16
W10x49	0.83	11/16	7/8	1-1/8	1-11/16	2-1/2
W14x228	2.49	5/16	1/2	9/16	7/8	1-1/4
W14x730	6.62	5/16	5/16	5/16	3/8	9/16

The thicknesses contained in the table below are applicable when the Spray-Applied Fire Resistive Materials applied to columns' flange tips are reduced to one-half that shown in the table below:

Min Column Size	W/D	Min Thk (In) 1 h	1-1/2 h	2 h	3 h	4 h
W6x9	0.33	1-1/8	1-5/8	2-1/16	2-15/16	3-13/16
W6x16	0.57	7/8	1-5/16	1-3/4	2-9/16	3-3/8
W8x28	0.67	13/16	1-3/16	1-1/2	2-1/4	2-15/16
W10x49	0.83	3/4	1-1/16	1-3/8	2-1/16	2-3/4
W14x233	2.49	5/16	1/2	11/16	1-3/16	1-5/8
W14x730	6.62	5/16	5/16	5/16	9/16	3/4

   Construction Products Div., W. R. Grace & Co. of Canada Ltd.—Types MK-4 or MK-5.
   Grace Construction Products—Types MK-4, MK-5, MK-6/HY, MK-6s, RG.
   Grace Korea Inc.—Types MK-6/CBF, MK-6/ED, MK-6/HY, MK-6s.
   Pyrok Inc.—Type LD.
   Southwest Vermiculite Co., Inc.—Types 4, 5, 5EF, 5GP, 5MD, 8EF, 8GP, 8MD, 9EF, 9GP, 9MD.
   Vermiculite Products, Inc.—Type MK-4 or MK-5.
2. **Metal Lath**—(Optional for contour application)—3.4 lb/sq yd galvanized or painted expanded steel lath. Lath shall be lapped 1 in. and tied together with No. 18 SWG galvanized steel; wire spaced vertically 6 in. O.C.
3. **Steel Column**—Wide flange steel column, min sizes as shown in the tables below.

*Bearing the UL Classification Marking

03 UL DESIGN NO. X772
12" = 1'-0"

Design No. D780

April 14, 2017

Restrained Assembly Rating — 1, 1-1/2, 2 or 3 h

Unrestrained Assembly Rating — 1, 1-1/2, 2 or 3 h (See Item 5)

Unrestrained Beam Ratings — 1, 1-1/2, 2 or 3 h (See Item 5)

Restricted Load Condition — See Items 4 and 5B

This design was evaluated using a load design method other than the Limit States Design Method (e.g., Working Stress Design Method). For jurisdictions employing the Limit States Design Method, such as Canada, a load restriction factor shall be used — See Guide BXUV or BXUV7

*** Indicates such products shall bear the UL or cUL Certification Mark for jurisdictions employing the UL or cUL Certification (such as Canada), respectively.**

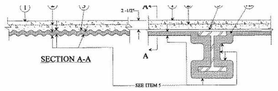

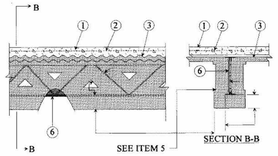

1. **Normal Weight or Lightweight Aggregate Concrete** — Normal weight carbonate or siliceous aggregate concrete, 150 plus over minus 3 pcf unit weight, 3500 psi compressive strength, vibrated. Lightweight concrete, expanded shale, clay, or slate aggregate by rotary-kiln method, 110 plus over minus 3 pcf unit weight, 3500 psi compressive strength, 4 to 7 percent entrapped air.

2. **Welded Wire Fabric** — 6 x 6 — W2.0 X W2.0

3. **Steel Floor and Form Units** — No. 28 MSG galv corrugated sheet steel minimum. The description and sizes of the corrugated sheet steel units and the max beam spacing are as follows:

Steel Deck Unit In.	Nom Pitch In.	Sheet Steel Gauge MSG	Max Beam Spacing
9/16	2-1/2	28	3 ft, 6 in. O.C.
15/16	3-3/4	26	5 ft, 0 in. O.C.
1-5/16	5	26	6 ft, 6 in. O.C.
1-5/16	5	24	7 ft, 0 in. O.C.
1-5/16	5	22	7 ft, 6 in. O.C.
1-5/16	5	20	8 ft, 0 in. O.C.

Units welded to each steel beam, 36 welds per 100 sq ft of form units with at least one weld at each side joint. Welding of deck side joint between beams for deck spans ranging between 3 ft, 6 in. and 6 ft, 6 in. O.C. shall be at least two welds of each side joint. Welding of side joints for spans greater than 6 ft, 6 in. O.C. shall be a minimum of three welds of each side joint.

Any Manufacturer — Corrugated deck having cross-section similar to above description.

3A. **Steel Floor and Form Units** — As an alternate to Item 3, Composite 1-1/2, 2, or 3 in. deep galv fluted units. Min gauge is No. 22 MSG. Spacing of welds attaching units to supports shall be at each side of joint and not to exceed 12 in. OC between joints. Adjacent units button punched or welded together 36 in. OC at joints.
CANAM STEEL CORP — 36 in. wide Type P-3623, P-3606 and P-3615 composite; 24 in. wide Type P-2432 composite.

CANAM STEEL CORP — Types B, B Lok, N Lok, 1-1/2, 2 and 3 in. Lok Floor, UFS and UFX. Units may be phos/painted or painted/painted.

VERCO DECKING INC - A NUCOR CO — Types PLB, HSB, PLN3, HSN3, PLN, N, and FORMLOK™ deck types PLB, B, BR, PLN3, N3, PLN, N, PLW2, W2, PLW3, W3. Units are min 24 in. wide and may be galvanized or phos./ptd.

VULCRAFT, DIV OF NUCOR CORP — 24, 30 and 36 in. wide Type 1.5VLI; 24 or 36 in. wide Types 2VLI, 3VLI. Types 1-SLVI, 2VLI, and 3VLI units may be phos/ptd. Type BW Slotted Deck.

4. **Steel Joists** — 10K1 or 16K2 min size with a max tensile stress of 30,000 psi or 12K3 min size with max tensile stress of 24,000 psi.

4A. As an alternate to Item 4, LH Series joists spanning no greater than 60 ft. For spans greater than 60 ft, deflection under the published total load shall not be greater than 1/277 of the joist span.

4B. **Composite Joists** — (Not shown) — As an alternate to Items 4 and 4A, steel joists designed for full composite action with the concrete slab. Min overall depth 13 in. Min area of joist members shall be 0.708 square in. for top and bottom chord angles and 0.442 square in. for web. Designed in accordance with SJI Specifications for K-Series joists as revised to November 18, 1989.

4C. **Structural Steel Members*** — (Not shown) — As an alternate to Items 4, 4A and 4B — (Not shown) — Composite joists with top chord embedded in concrete slab. Welded to end supports. Min area of joist members shall be 0.708 square in. for top and bottom chord angles and 0.442 square in. for web.
VESCOM STRUCTURAL SYSTEMS INC — Type V.

4D. **Steel Beams** — W8x28 min size. As an alternate to steel joists, Items 4, 4A, 4B and 4C.

4E. **Horizontal Bridging** — (Not shown) — Min 1-1/4 by 1-1/4 by 1/8 in. thick steel angles for use with noncomposite joists (Item 4). Number and spacing per Steel Joist Institute specifications. Welded to top and bottom chord of the joists. Min thickness of Spray-Applied Fire Resistive Materials on bridging angles is 1-1/2 in.

5. **Spray-Applied Fire Resistive Materials*** — Applied by mixing with water and spraying in no more than one coat to a final thickness as shown below to steel surfaces which must be free of dirt, loose scale and oil. Min avg and min ind density of 15/14 pcf, respectively. For method of density determination, see Design Information Section, Sprayed Materials.

Restrained Assembly Rating Hr	Unrestrained Assembly Rating Hr	Unrestrained Beam Rating Hr	on Deck	on Beam
1	1	1	3/8	7/16
1-1/2	1	1	1/2	7/16
1-1/2	1-1/2	1-1/2	1/2	3/4
2	1	1	1/2	7/16
2	2	2	5/8	1
3	1-1/2	1-1/2	1/2	3/4
3	3	3	7/8	1-5/16

Restrained Assembly Rating Hr	Unrestrained Assembly Rating Hr	Unrestrained Beam Rating Hr	LH Joist	Joist Thickness 10K1 more than 4 ft OC	10K1 less than 4 ft OC	16K2 more than 4 ft OC	16K2 less than 4 ft OC
1	1	1	1-1/8	1-1/8	15/16	15/16	15/16
1-1/2	1	1	1-5/16	1-5/16	1-5/16	1-1/4	1-3/16
1-1/2	1-1/2	1-1/2	1-1/2	1-5/8	1-7/16	1-1/4	1-3/16
2	1	1	1-7/16	1-7/16	1-7/16	1-9/16	1-1/2
2	2	2	1-1/2	2-3/16	1-15/16	1-9/16	1-1/2
3	1-1/2	1-1/2	1-1/2	3-1/4	2-13/16	2-1/4	2-1/8
3	3	3	3-1/4	3-1/4	2-13/16	2-1/4	2-1/8

ARABIAN VERMICULITE INDUSTRIES — Types MK-6/CBF, MK-6/ED, MK-6/HY, MK-6/HY Extended Set, MK-10 HB, MK-10 HB Extended Set, MK-6/HB, MK-6s.

GCP APPLIED TECHNOLOGIES INC — Types MK-6 GF, MK-6/HY, MK-6/HY Extended Set, MK-10 HB, MK-10 HB Extended Set, MK-6/HB, MK-6s, RG .

GCP KOREA INC — Types MK-6/CBF, MK-6/ED, MK-6 GF, MK-6/HY, MK-6/HY Extended Set, MK-10 HB, MK-10 HB Extended Set, MK-6/HB, MK-6s.

5A. **Spray-Applied Fire Resistive Materials*** — Applied by mixing with water and spraying in more than one coat to a final thickness as shown below to steel surfaces which must be free of dirt, loose

CODE REVIEW
G-100

FOR BLUEBEAM LABELINGOOR:

OCCUPANCY LOAD FACTOR LEGEND

- (none)
- IBC Business areas (1004.8)
- IBC Kitchens, commercial
- IBC Accessory storage areas, mechanical rooms
- IBC Educational - Classroom area (Net)
- IBC Locker rooms
- IBC Assembly w/o fixed seats - Unconcentrated - tables and chairs(Net)
- IBC Exercise rooms

FIRE RESISTANCE RATINGS OF BUILDING ELEMENTS

BUILDING ELEMENT	RATING (HRS)	REFERENCE
MALE	0	IBC TABLE 601
Bearing Walls; Exterior	0	IBC TABLE 601
Bearing Walls; Interior	0	IBC TABLE 601
Non-bearing Walls & Partitions; Exterior	0	IBC TABLE 601
Non-bearing Walls & Partitions; Interior	0	IBC TABLE 601
Floor Construction & Associated Secondary Members	0	IBC TABLE 601
Roof Construction & Associated Secondary Members	0	IBC TABLE 601

ALLOWABLE HEIGHTS AND AREAS

	1st Occupancy Info	Provided
Occupancy Classification	E	-
Allowable Height in Feet	55'	55'
Allowable Height Stories	2	2
Non-Sprinklered Allowable Area (SF)	14500	-
Tabular Allowable Area (SF)	29,000	-
Frontage Increase (.XX)	0.5	-
Total Allowable Area per Story (SF)	36,250	19,010
Maximum Common Path (With Sprinkler)	75'-0"	0"
Maximum Exit Access Travel Distance (With Sprinkler)	250'-0"	0"
Corridor Fire Resistance Rating	0hr.	0hr.

PLUMBING FIXTURES

	NUMBER OF OCCUPANTS	NUMBER OF FIXTURES	NUMBER OF LAVATORIES	NUMBER OF DRINKING FOUNTAINS
MALES	262	6	6	-
FEMALES	262	6	6	-
TOTAL	524	12	12	6

PROJECT GENERAL INFORMATION

NAME OF PROJECT:	PKG 3A - GPHS NEW FIELDHOUSE
BUILDING / FACILITY NAME:	PKG 3A - GPHS NEW FIELDHOUSE
LOCATION (ADDRESS):	1000 KEENE ST.
STATE, ZIP CODE:	GALENA PARK, TX 77547
DESCRIPTION OF PROJECT:	FIELDHOUSE LOCATED SOUTH END OF CURRENT DEMENT FIELD AT GPHS.
AUTHORITY HAVING JURISDICTION:	CITY OF GALENA PARK, TX
APPLICABLE BUILDING CODE:	2009 INTERNATIONAL BUILDING CODE 2009 INTERNATIONAL FIRE CODE 2009 UNIFORM MECHANICAL CODE 2009 UNIFORM PLUMBING CODE 2011 NATIONAL ELECTRICAL CODE
APPLICABLE ENERGY CODE:	2015 INTERNATIONAL ENERGY EFFICIENCY CODE
ACCESSIBILITY:	2012 TEXAS ACCESSIBILITY STANDARD
CONSTRUCTION TYPE:	2B
CONSTRUCTION TYPE MIX:	-
OCCUPANCY CLASSIFICATION:	GROUP E
OVERALL USE OF BUILDING:	HIGH SCHOOL FIELDHOUSE
HIGH RISE BUILDING:	NO
AUTOMATIC FIRE SPRINKLER SYSTEM:	YES. NFPA 13
STANDPIPE SYSTEM:	NO
MINIMUM CORRIDOR WIDTH (RE. IBC):	44"
GROSS BUILDING SQ FT:	33,192 SQ FT.
NET BUILDING SQ FT:	22,954 SQ FT.
TEA OCCUPANT LOAD:	524 OCCUPANTS

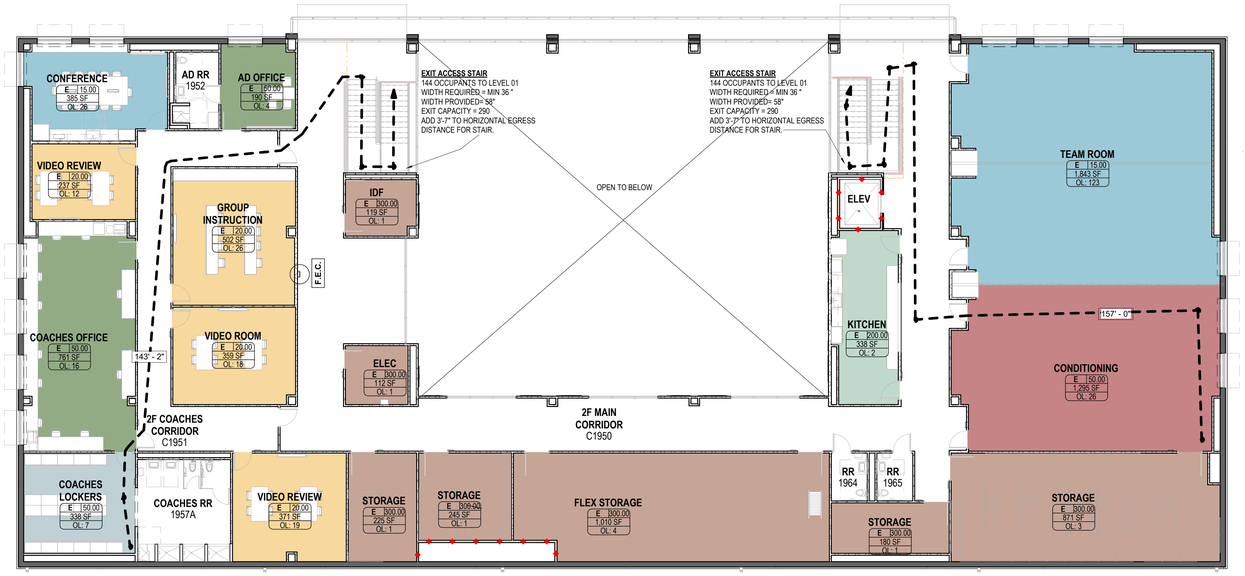

2 LEVEL 2 - LIFE SAFETY PLAN
3/32" = 1'-0"

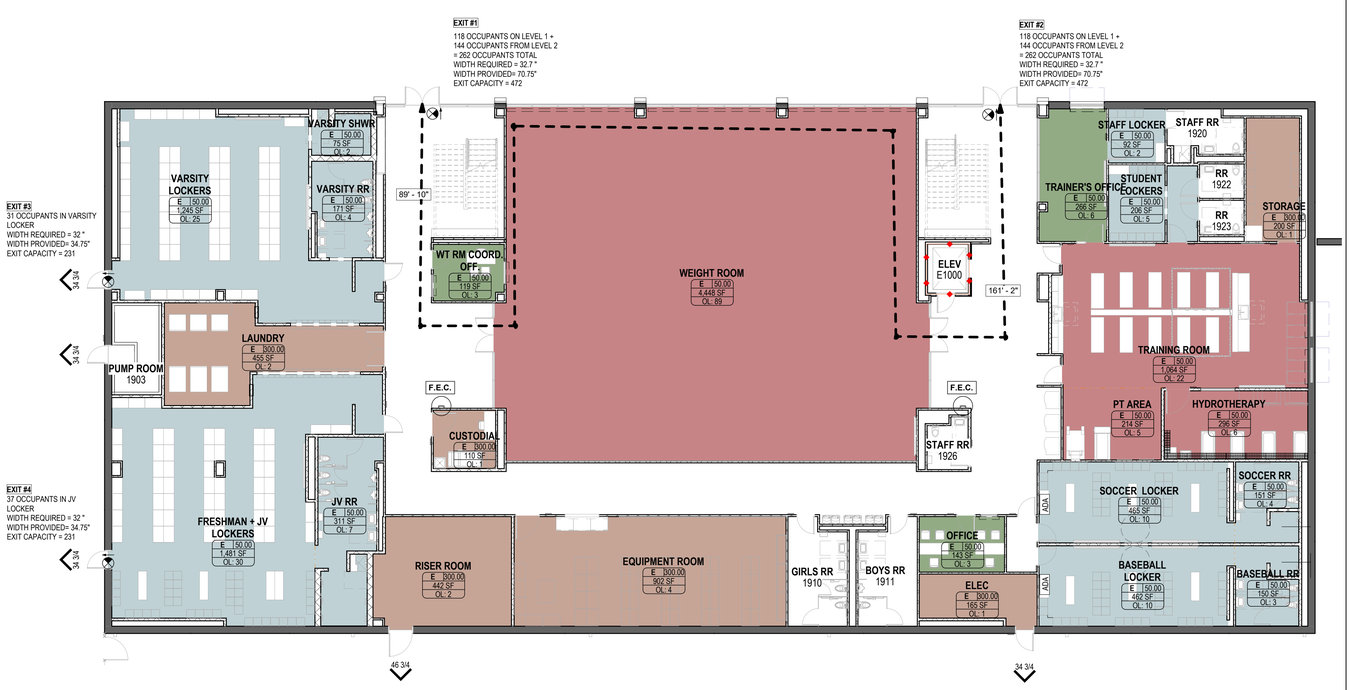

1 LEVEL 1 LIFE SAFETY PLAN
3/32" = 1'-0"

NET OCCUPANCY

Room Information			Occupancy Requirements		Category Calc (A4, A5, B)
Number	Name	Area	Occupancy Load Factor	Occ Function (O.F.)	Occ G.T.
LEVEL 1					
1904	FRESHMAN + JV LOCKERS	1,481 SF	50 SF	IBC Locker rooms	30
1905	WT RM COORD. OFF.	119 SF	50 SF	IBC Business areas (1004.8)	2
1908	EQUIPMENT ROOM	902 SF	300 SF	IBC Accessory storage areas, mechanical rooms	3
1913	ELEC	165 SF	300 SF	IBC Accessory storage areas, mechanical rooms	1
1915	BASEBALL LOCKER	462 SF	50 SF	IBC Locker rooms	9
1916	SOCCER LOCKER	465 SF	50 SF	IBC Locker rooms	9
1916A	SOCCER RR	151 SF	50 SF	IBC Locker rooms	3
1915A	BASEBALL RR	150 SF	50 SF	IBC Locker rooms	3
1925	HYDROTHERAPY	296 SF	50 SF	IBC Exercise rooms	6
1924	STORAGE	200 SF	300 SF	IBC Accessory storage areas, mechanical rooms	1
1921	STUDENT LOCKERS	206 SF	50 SF	IBC Locker rooms	4
1918	TRAINER'S OFFICE	266 SF	50 SF	IBC Business areas (1004.8)	5
1927	WEIGHT ROOM	4,448 SF	50 SF	IBC Exercise rooms	89
1906	CUSTODIAL	110 SF	300 SF	IBC Accessory storage areas, mechanical rooms	1
1917A	PT AREA	214 SF	50 SF	IBC Exercise rooms	4
1919	STAFF LOCKER	92 SF	50 SF	IBC Locker rooms	2
1901	VARSITY LOCKERS	1,245 SF	50 SF	IBC Locker rooms	25
1901A	VARSITY SHWR	75 SF	50 SF	IBC Locker rooms	1
1904A	JV RR	311 SF	50 SF	IBC Locker rooms	6
1902	LAUNDRY	455 SF	300 SF	IBC Accessory storage areas, mechanical rooms	2
1901B	VARSITY RR	171 SF	50 SF	IBC Locker rooms	3
1912	OFFICE	143 SF	50 SF	IBC Business areas (1004.8)	3
1917	TRAINING ROOM	1,064 SF	50 SF	IBC Exercise rooms	21
1907	RISER ROOM	442 SF	300 SF	IBC Accessory storage areas, mechanical rooms	1
		13,634 SF			236
LEVEL 2					
1953	CONFERENCE	385 SF	15 SF	IBC Assembly w/o fixed seats - Unconcentrated - tables and chairs(Net)	26
1951	AD OFFICE	190 SF	50 SF	IBC Business areas (1004.8)	4
1954	VIDEO REVIEW	237 SF	20 SF	IBC Educational - Classroom area (Net)	12
1956	COACHES OFFICE	761 SF	50 SF	IBC Business areas (1004.8)	15
1955	GROUP INSTRUCTION	502 SF	20 SF	IBC Educational - Classroom area (Net)	25
1958	VIDEO ROOM	359 SF	20 SF	IBC Educational - Classroom area (Net)	18
1957	COACHES LOCKERS	338 SF	50 SF	IBC Locker rooms	7
1959	VIDEO REVIEW	371 SF	20 SF	IBC Educational - Classroom area (Net)	19
1970	KITCHEN	338 SF	200 SF	IBC Kitchens, commercial	2
1967	STORAGE	871 SF	300 SF	IBC Accessory storage areas, mechanical rooms	3
1968	CONDITIONING	1,295 SF	50 SF	IBC Exercise rooms	26
1969	TEAM ROOM	1,843 SF	15 SF	IBC Assembly w/o fixed seats - Unconcentrated - tables and chairs(Net)	123
1961	ELEC	112 SF	300 SF	IBC Accessory storage areas, mechanical rooms	1
1960	IDF	119 SF	300 SF	IBC Accessory storage areas, mechanical rooms	1
1966	STORAGE	180 SF	300 SF	IBC Accessory storage areas, mechanical rooms	1
1962	STORAGE	225 SF	300 SF	IBC Accessory storage areas, mechanical rooms	1
1971	FLEX STORAGE	1,010 SF	300 SF	IBC Accessory storage areas, mechanical rooms	3
1963	STORAGE	245 SF	300 SF	IBC Accessory storage areas, mechanical rooms	1
		9,380 SF			268
Grand total: 42		23,014 SF			524

CODE ANALYSIS SYMBOLS

- 1-HOUR FIRE RATING
- 2-HOUR FIRE RATING
- 3-HOUR FIRE RATING
- 0-HOUR SMOKE RATING
- 1-HOUR SMOKE RATING
- EGRESS TRAVEL PATH
- EGRESS COMMON PATH OF TRAVEL
- LS-1 — TRAVEL DISTANCE NAME
- 150' - 0" — TRAVEL DISTANCE LENGTH
- EXIT SIGN
- Area Name — OCCUPANCY TYPE — A3 100.0 — FUNCTION OF SPACE — ROOM AREA — 150 SF — LOAD FACTOR — OL 00000 — OCCUPANT LOAD FOR ROOM (NET FUNCTIONS ONLY)
- 35" POINT OF ***EXIT ACCESS*** WITH CLEAR EXIT WIDTH (EXCLUDING DOOR LEAF AND FRAME STOPS)
- 35" POINT OF ***EXIT DISCHARGE*** WITH CLEAR EXIT WIDTH (EXCLUDING DOOR LEAF AND FRAME STOPS)
- A.E.D. AUTOMATED EXTERNAL DEFIBRILLATOR
- F.E.C. FIRE EXTINGUISHER CABINET
- ACCESSIBLE PUSH PLATE ACTUATOR
- F.E. FIRE EXTINGUISHER
- FH PROPOSED FIRE HYDRANT
- FIRE HOSE COVERAGE

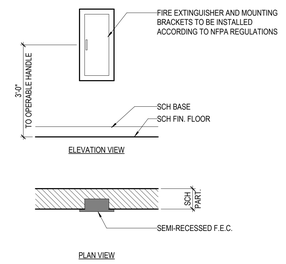

FIRE-RATED ASSEMBLIES

ROOF ASSEMBLY	UL P921
FLOOR ASSEMBLY	UL D780
WIDE FLANGE STEEL COLUMNS	UL X772
TUBE STEEL COLUMNS	UL X771
STUD FRAMED WALL	UL U465
STUD FRAMED SHAFTWALL	UL U415
CMU WALL	UL U905

1. UL ASSEMBLIES INDICATED ESTABLISH A BASIS OF PERFORMANCE. OTHER ASSEMBLIES MAY BE CONSIDERED AT THE DISCRETION OF THE ARCH. IF EQUIVALENT PERFORMANCE IS PROVIDED. SUBSTITUTION PROPOSALS SHALL INCLUDE CHANGES REQUIRED TO ALL COMPONENTS OF THE ASSEMBLY.

2. PROTECT ALL CONDUIT, PIPES, DUCTS, AND MISC. PENETRATIONS THROUGH FIRE-RATED WALLS, FLOOR, AND OR ROOF ASSEMBLIES WITH FIRE SAFING INSULATION AND FIRE STOP SEALANT. REFER TO GUIDELINES FOR APPROPRIATE ASSEMBLIES.

3. PROVIDE DAMPERS AND OR LIGHT FIXTURE PROTECTION AS REQUIRED BY UL ASSEMBLIES.

4. PROVIDE SPRAY-ON FIREPROOFING PROTECTION FOR STRUCTURAL MEMBERS CROSSING FROM A FIRE-RATED ROOF ASSEMBLY AND OR A FIRE-RATED FLOOR ASSEMBLY INTO OTHER AREAS WITH ANY OTHER FIRE-RATED ASSEMBLY OR NO FIRE-RATED ASSEMBLY, FOR THEIR FULL LENGTH.

5. PERMANENTLY MARK ALL WALLS ABOVE CEILINGS AS FOLLOWS:
"FIRE-RATED WALL - PROTECT ALL OPENINGS"
LETTERS SHALL BE RED IN COLOR AND A MINIMUM OF 2 1/2 INCHES IN HEIGHT. PROVIDE A MINIMUM OF ONE MARKING PER STRUCTURAL BAY.

6. PERMANENTLY MARK SMOKE PARTITIONS ABOVE CEILINGS AS FOLLOWS:
"SMOKE PARTITION - PROTECT ALL OPENINGS"
LETTERS SHALL BE RED IN COLOR AND A MINIMUM OF 2 1/2 INCHES IN HEIGHT. PROVIDE A MINIMUM OF ONE MARKING PER STRUCTURAL BAY.

FIRE-RATED FLOOR AND CEILING LEGEND

- 2 HOUR RATED UL FLOOR/ CEILING ASSEMBLY
- 1 HOUR RATED UL FLOOR/ CEILING ASSEMBLY
- NOT RATED STRUCTURE HIGHER THAN 20' A.F.F.

PBK
www.pbk.com
TX FIRM: BR 1608
HOUSTON, TX
713-965-0608

PKG 3A - GPHS NEW FIELDHOUSE

1000 Keene St.
Galena Park, TX 77547

CLIENT PROJECT NO: 240539

ISSUE FOR PROPOSAL

KEY PLAN
NORTH: PLAN TRUE

REGISTERED ARCHITECT JAIME LEQUERICA STATE OF TEXAS

6/10/2025

CLIENT	
Galena Park ISD	
DATE: June 10, 2025	PROJECT NUMBER: 240539

DRAWING HISTORY

No.	Description	Date

CHECKED BY: Checker

DRAWN BY: Isabela Esparza

CODE REVIEW

G-100

Plot Stamp:
6/10/2025 5:34:16 PM

LEVEL 1 SCOPE PLAN
G-101
FOR BLUEBEAM LABELING/OCR:

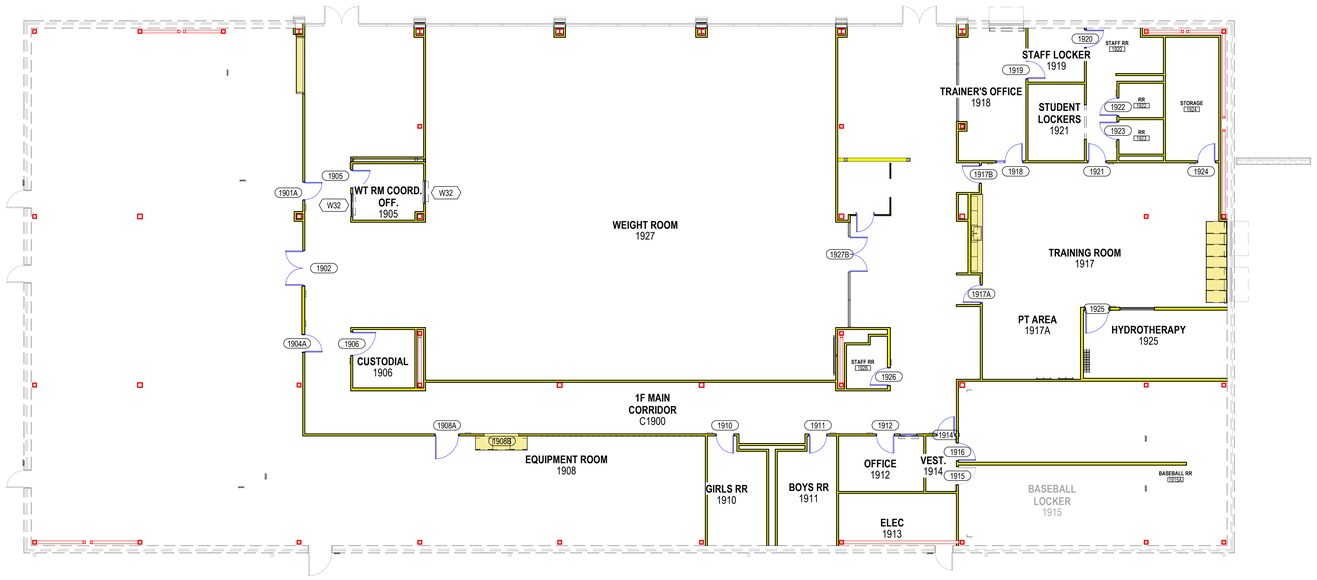

02 LEVEL 1 - DIRTT SCOPE PLAN (BASE BID)
3/32" = 1'-0"

DIRTT SCOPE LEGEND

- DIRTT WALL AND FINISH
- CASEWORK BY DIRTT
- ALL DOORS PROVIDED BY DIRTT, ALL DIRTT DOORS TO TRANSITION

WALL MOUNTED TV/MB/TB INSTALLED IN DIRTT WALLS

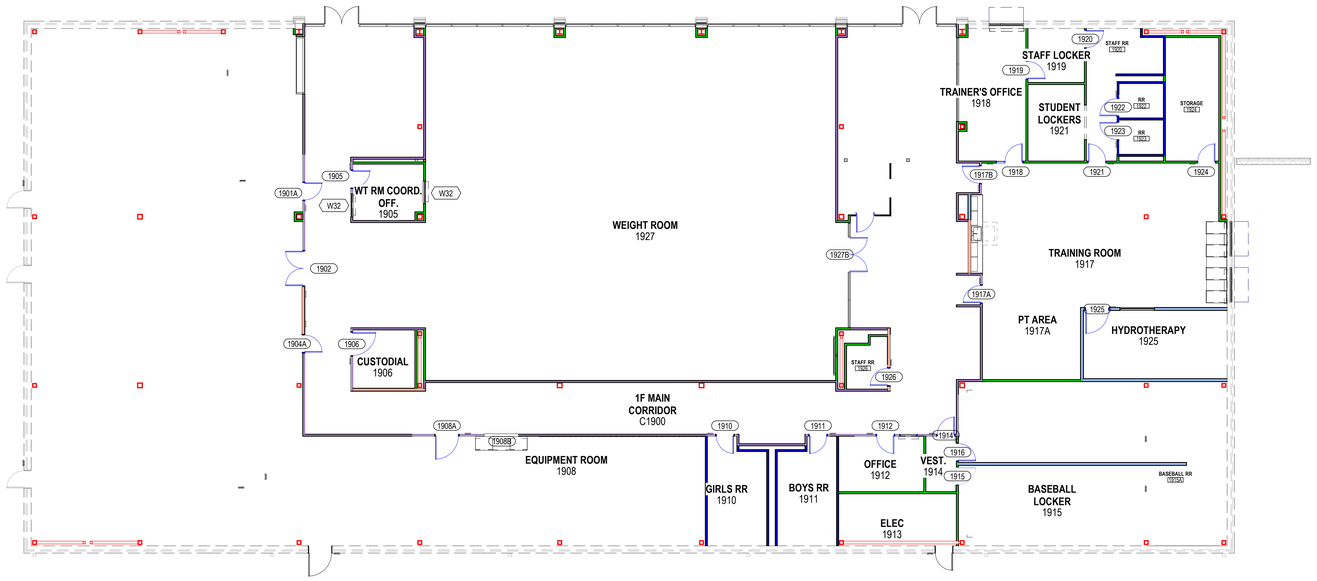

01 LEVEL 1 - CONVENTIONAL SCOPE PLAN (ALTERNATE #5)
3/32" = 1'-0"

CONVENTIONAL SCOPE LEGEND

- 3 5/8 - STUD WALL WITH GYP ON BOTH SIDES
- 6"- STUD WALL WITH GYP ON BOTH SIDES
- 3 5/8 - STUD WITH 5/8" CEMENT BOARD TO 7'-0", WITH TILE AND SCHLUTER WITH TRIM AND TRANSITION TO 5/8 GYP PAINTED.
- 6"- STUD WITH 5/8" CEMENT BOARD TO 7'-0", WITH TILE AND SCHLUTER WITH TRIM AND TRANSITION TO 5/8 GYP PAINTED.
- 3 5/8 - STUD WITH 5/8" CEMENT BOARD TO FULL HEIGHT, WITH TILE AND SCHLUTER WITH TRIM AND TRANSITION TO 5/8 GYP PAINTED.
- ALL DOORS TO BE 6'-10" HIGH BY 3'-0" WIDE, WITH HM FRAMES AND HM DOOR PANELS

PBK

www.pbk.com
TX FIRM: BR 1608
HOUSTON, TX
713-965-0608

PKG 3A - GPHS NEW FIELDHOUSE

1000 Keene St,
Galena Park, TX 77547

CLIENT PROJECT NO: 240539

ISSUE FOR PROPOSAL

KEY PLAN
NORTH: PLAN TRUE

REGISTERED ARCHITECT
JAN LEPICOVSKY
25572
STATE OF TEXAS

6/10/2025

CLIENT	
Galena Park ISD	
DATE	PROJECT NUMBER
June 10, 2025	240539

DRAWING HISTORY

No.	Description	Date

CHECKED BY: TC
DRAWN BY: LG

LEVEL 1 SCOPE PLAN

G-101

Plot Stamp:
6/11/2025 10:53:39 AM

LEVEL 2 SCOPE PLAN
G-102
FOR BLUEBEAM LABELING/OCR:

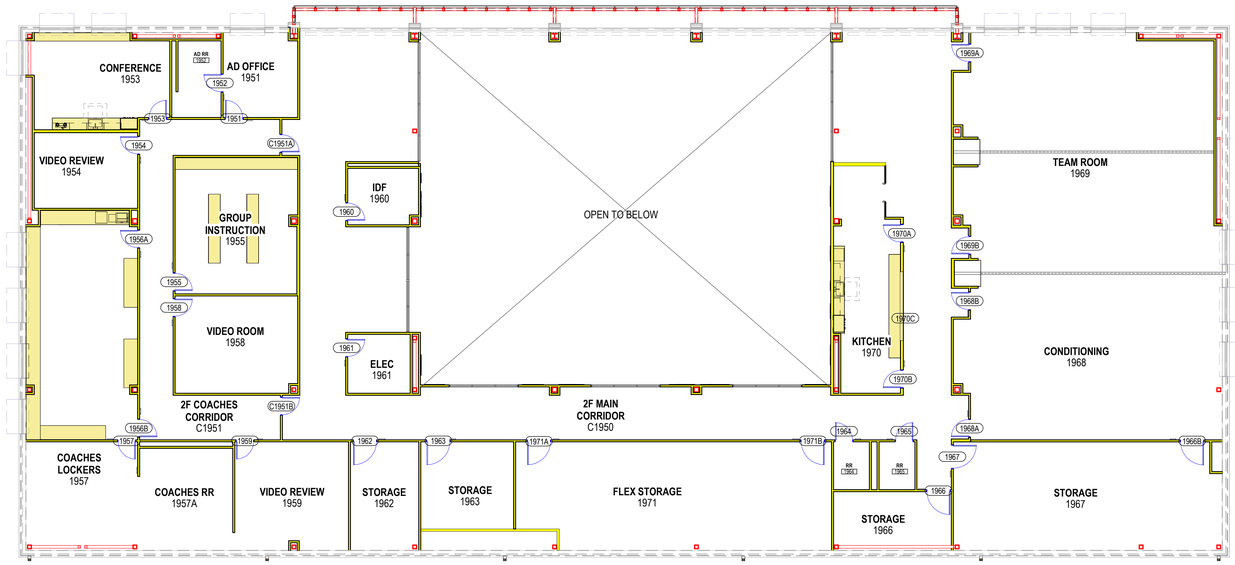

1 LEVEL 2 - DIRTT SCOPE PLAN (BASE BID)
3/32" = 1'-0"

DIRTT SCOPE LEGEND

- DIRTT WALL AND FINISH
- CASEWORK BY DIRTT
- ALL DOORS PROVIDED BY DIRTT, ALL DIRTT DOORS TO TRANSITION

WALL MOUNTED TV/MB/TB
INSTALLED IN DIRTT WALLS

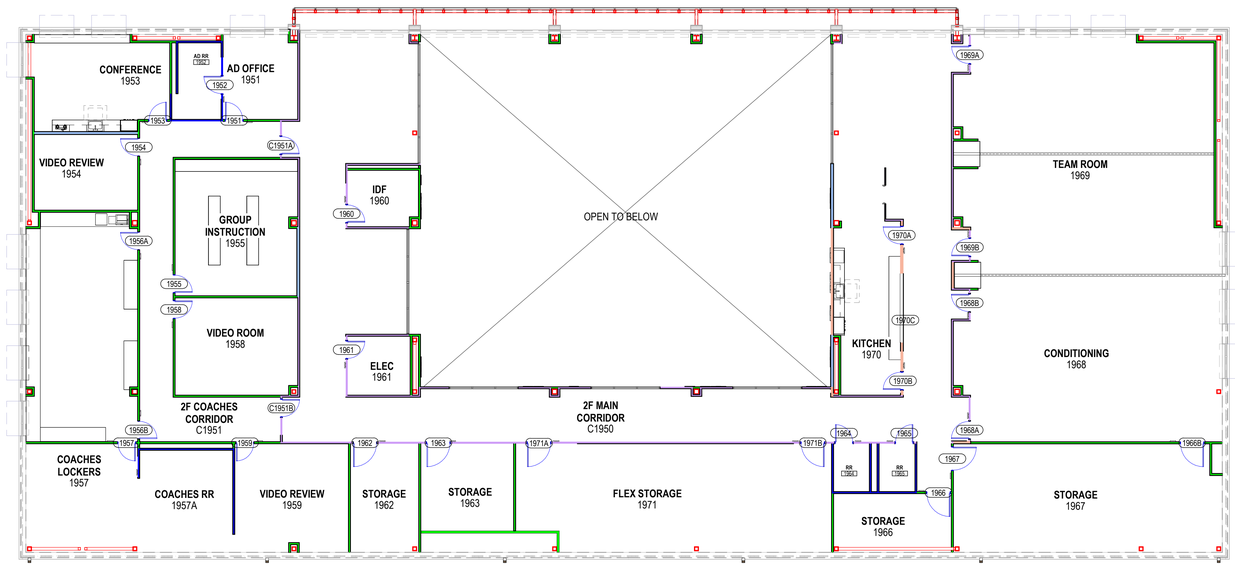

2 LEVEL 2 - CONVENTIONAL SCOPE PLAN (ALTERNATE #5)
3/32" = 1'-0"

CONVENTIONAL SCOPE LEGEND

- 3 5/8 - STUD WALL WITH GYP ON BOTH SIDES
- 6"- STUD WALL WITH GYP ON BOTH SIDES
- 3 5/8 - STUD WITH 5/8" CEMENT BOARD TO 7'-0", WITH TILE AND SCHLUTER WITH TRIM AND TRANSITION TO 5/8 GYP PAINTED.
- 6"- STUD WITH 5/8" CEMENT BOARD TO 7'-0", WITH TILE AND SCHLUTER WITH TRIM AND TRANSITION TO 5/8 GYP PAINTED.
- 3 5/8 - STUD WITH 5/8" CEMENT BOARD TO FULL HEIGHT, WITH TILE AND SCHLUTER WITH TRIM AND TRANSITION TO 5/8 GYP PAINTED.
- ALL DOORS TO BE 6'-10" HIGH BY 3'-0" WIDE, WITH HM FRAMES AND HM DOOR PANELS

PBK
www.pbk.com
TX FIRM: BR 1608
HOUSTON, TX
713-365-0608

PKG 3A - GPHS NEW FIELDHOUSE

1000 Keene St.
Galena Park, TX 77547

CLIENT PROJECT NO: 240539

ISSUE FOR PROPOSAL

KEY PLAN
NORTH: PLAN TRUE

REGISTERED ARCHITECT JAN LEPICOVITZ 25572 STATE OF TEXAS
6/10/2025

CLIENT	
Galena Park ISD	
DATE: June 10, 2025	PROJECT NUMBER: 240539

DRAWING HISTORY

No.	Description	Date

CHECKED BY: TC
DRAWN BY: LG

LEVEL 2 SCOPE PLAN

G-102

Plot Stamp:
6/11/2025 10:53:45 AM

GENERAL NOTES

1. THE CONTRACTOR SHALL BE RESPONSIBLE FOR VERIFYING THE LOCATION OF ALL EXISTING UTILITIES PRIOR TO CONSTRUCTION.
2. THE CONTRACTOR SHALL BE RESPONSIBLE FOR FAMILIARIZING HIMSELF WITH THE JOBSITE.
3. THE CONTRACTOR SHALL BE RESPONSIBLE FOR SAFEGUARDING AND PROTECTING ALL MATERIAL AND EQUIPMENT STORED ON THE JOBSITE, THE CONTRACTOR SHALL BE RESPONSIBLE FOR THE STORAGE OF MATERIALS IN A SAFE AND WORKMANLIKE MANNER TO PREVENT INJURIES AND AFTER WORKING HOURS, UNTIL PROJECT COMPLETION.
4. WRITTEN DIMENSIONS ON THESE DRAWINGS SHALL HAVE PRECEDENCE OVER SCALE DIMENSIONS. CONTRACTOR SHALL VERIFY AND BE RESPONSIBLE FOR ALL DIMENSIONS AND CONDITIONS ON THE JOB AND THIS OFFICE MUST BE NOTIFIED OF ANY VARIATION FROM THE DIMENSIONS AND CONDITIONS SHOWN BY THESE DRAWINGS. DIMENSIONS SHOWN ARE TO FACE OF CURB UNLESS NOTED OTHERWISE.
5. THE CONTRACTOR SHALL BE RESPONSIBLE FOR OBTAINING ALL REQUIRED PERMITS AND CONSTRUCTION INSPECTIONS WITH THE PROPER REGULATORY AGENCIES, PRIOR TO BEGINNING CONSTRUCTION. COPIES OF ALL PERMITS SHALL BE SENT TO THE ENGINEER.
6. CONTRACTOR TO OBTAIN ALL PERMITS REQUIRED PRIOR TO STARTING CONSTRUCTION OF UTILITIES AND/OR CULVERTS WITHIN RIGHT-OF-WAYS.
7. TOPOGRAPHIC SURVEY BY: WEST BELT SURVEYING INC.
   FIRM NO. 10073800
   21020 PARK ROW KATY, TEXAS 77449
   PHONE: (281) 599-8288
8. BENCHMARK: SEE SURVEY
9. CONTRACTOR IS SOLELY RESPONSIBLE FOR CONTACTING THE SURVEYOR AND VERIFYING THE BENCHMARK AND ON SITE TBM'S IN THE FIELD.
10. THE DRAWINGS SHOW AS MUCH INFORMATION AS CAN BE REASONABLY OBTAINED FROM ON THE GROUND OBSERVATION AND EXISTING CONSTRUCTION DRAWINGS REGARDING THE ENTIRE TOPOGRAPHY, CONTOURS, SUB-SURFACE SOILS, AS WELL AS THE LOCATION AND NATURE OF PIPELINES, STORM SEWERS, WATERLINES, NATURAL GAS LINES, UNDERGROUND CABLES, ECT. HOWEVER, THE ACCURACY OF OR COMPLETENESS OF SUCH INFORMATION IS NOT GUARANTEED.
11. THE EXISTING UTILITIES SHOWN WERE PROVIDED BY THE SURVEYOR. THE CONTRACTOR SHALL VERIFY THE LOCATIONS, SIZES, AND DEPTHS OF ALL UTILITIES. THE CONTRACTOR SHALL CONTACT THE CIVIL ENGINEER IF UTILITIES SHOWN ARE NOT AS SPECIFIED.
12. CONTRACTOR SHALL COMPLY WITH ALL OCCUPATIONAL SAFETY AND HEALTH ACT (O.S.H.A.) REGULATIONS.
13. ALL WORK IS TO BE DONE IN ACCORDANCE WITH APPLICABLE NATIONAL, STATE, MUNICIPAL, AND LOCAL CODES.
14. IT IS THE CONTRACTORS RESPONSIBILITY TO SUPERVISE AND COORDINATE ALL WORK TO ENSURE THE PROPER EXECUTION. ALL WORK IS TO BE ACCOMPLISHED IN A NEAT, WORKMAN LIKE MANNER, AND ALL EXCESS MATERIALS, TRASH, DEBRIS, ECT., SHALL BE REMOVED FROM THE JOB BY THE CONTRACTOR, AT HIS EXPENSE.
15. THE CONTRACTOR SHALL INCLUDE IN HIS BID AS AN INCIDENTAL ITEM FOR THE REMOVAL OF ANY EXISTING SIGNAGE THAT IS IN THE WAY OF THE PROPOSED NEW CONSTRUCTION. IF REMOVAL OF SIGNAGE IS NECESSARY, THE CONTRACTOR SHALL REPLACE SAID SIGNAGE.
16. THE CONTRACTOR SHALL KEEP ALL STREETS FREE OF DIRT, MUD,ETC. DURING THE COURSE OF CONSTRUCTION.
17. THE CONTRACTOR SHALL NOT LEAVE ANY TRENCHES OR PITS OPEN OVER NIGHT. THE CONTRACTOR SHALL ALSO BE RESPONSIBLE FOR KEEPING THE SCHOOL CHILDREN OUT OF WORK AREA.
18. CONTRACTOR SHALL NOTIFY ALL UTILITY COMPANIES IN THE AREA PRIOR TO COMMENCING WORK IN ANY RIGHT-OF-WAY OR EXISTING EASEMENT. A VERIFICATION NUMBER FROM THE ONE-CALL UTILITY COORDINATING COMMITTEE WILL BE REQUIRED. (800) 344-8377.
19. CONTRACTOR SHALL COORDINATE WITH APPROPRIATE UTILITY COMPANIES TO RELOCATE EXISTING POWER POLE(S) AND/OR UTILITY BOX(ES) OR ANY OTHER UTILITIES DEEMED NECESSARY BY THE ENGINEER. CONTRACTOR SHALL COORDINATE THE RELOCATION AND PAY ANY FEES.
20. STRIPING AND CROSS-HATCHING SHALL BE "TRAFFIC YELLOW" PAINTED LINES, FOUR (4) INCHES WIDE UNLESS OTHERWISE NOTED.
21. ALL PAVEMENT MARKINGS (OTHER THAN STRIPING & CROSS-HATCHING) SHALL BE THERMOPLASTIC.
22. REFER TO ARCHITECTURAL SHEETS FOR HANDICAP SIGNAGE.
23. EXISTING PAVEMENTS, CURBS, SIDEWALKS, AND DRIVEWAYS DAMAGED OR REMOVED DURING CONSTRUCTION SHALL BE REPLACED TO CITY STANDARDS.
24. CONDITION OF THE ROAD AND/OR RIGHT-OF-WAY, UPON COMPLETION OF JOB, SHALL BE AS GOOD AS OR BETTER THAN THE CONDITION PRIOR TO STARTING WORK.
25. ADEQUATE DRAINAGE SHALL BE MAINTAINED AT ALL TIMES DURING CONSTRUCTION AND SHALL BE RESTORED TO THE SATISFACTION OF THE OWNING AUTHORITY.
26. WHEEL CHAIR RAMPS SHALL BE INSTALLED IN ACCORDANCE WITH CITY STANDARDS AT ALL INTERSECTIONS WHERE SIDEWALKS EXIST AND THE EXISTING CURB OR SIDEWALK IS DAMAGED OR REMOVED DURING CONSTRUCTION.
27. THIS PROPERTY IS LOCATED IN ZONE "X" UNSHADED, AREAS DETERMINED TO BE OUTSIDE OF THE 500-YEAR FLOODPLAIN AS SHOWN ON THE FLOOD INSURANCE RATE MAP BY (FEMA) 48201C0065N PANEL 905 OF 1150 DATED MAY 2, 2019. THIS STATEMENT IS BASED ON SCALING THE LOCATION OF THIS SURVEY ON THE ABOVE REFERENCED MAP.

UTILITY NOTES

28. THE CONTRACTOR SHALL FURNISH ALL MATERIALS, EQUIPMENT, AND LABOR FOR EXCAVATION, INSTALLATION, BACKFILLING OF WATER AND/OR SEWER MAINS AND RELATED APPURTENANCES AS SHOWN ON THE PLANS AND/OR DESCRIBED IN THE SPECIFICATIONS.
29. THE CONTRACTOR SHALL COMPLY WITH O.S.H.A. REGULATIONS AND STATE OF TEXAS LAW CONCERNING EXCAVATION. CONTRACTOR SHALL PROVIDE SHEETING, SHORING AND BRACING AS NECESSARY TO PROTECT WORKMEN AND EXISTING UTILITIES DURING ALL PHASES OF CONSTRUCTION.
30. CONTRACTOR SHALL INCLUDE IN BASE PROPOSAL ALL COSTS ASSOCIATED WITH DE-WATERING WELL POINTING, STABILIZING, ETC, THAT MAY BE REQUIRED TO INSTALL ANY AND ALL UNDERGROUND UTILITIES.
31. BEDDING AND BACKFILL SHALL BE SUBSIDIARY TO THE PAY ITEMS FOR PIPE AND SHALL NOT BE PAID FOR DIRECTLY, REFER TO DETAILS. IF WET SAND CONDITIONS ARE ENCOUNTERED, THE CONTRACTOR SHALL CONTACT THE OWNER AND ENGINEER IMMEDIATELY.
32. THE CONTRACTOR SHALL BE RESPONSIBLE FOR THE SHIPPING AND STORING OF ALL WATER AND SEWER MATERIALS. IT SHALL BE THE CONTRACTOR'S RESPONSIBILITY TO EXAMINE SUCH MATERIALS AT THE POINT OF DELIVERY AND TO REJECT ALL DEFECTIVE MATERIAL. THE CONTRACTOR SHALL REPLACE THE DEFECTIVE MATERIAL WITH SOUND MATERIAL AT HIS OWN EXPENSE.
33. THE LOADING AND UNLOADING OF ALL PIPE, VALVES, HYDRANTS, MANHOLES AND OTHER ACCESSORIES SHALL BE IN ACCORDANCE WITH THE MANUFACTURER'S RECOMMENDED PRACTICES AND SHALL AT ALL TIMES BE PERFORMED WITH CARE TO AVOID ANY DAMAGE TO THE MATERIAL. THE CONTRACTOR SHALL LOCATE AND PROVIDE THE NECESSARY STORAGE AREAS FOR MATERIALS AND EQUIPMENT.
34. ALL STORM SEWER TO BE HIGH DENSITY POLYETHYLENE CORRUGATED EXTERIOR / SMOOTH INTERIOR PIPE WITH WATER TIGHT JOINTS PER ASTM D 3212 UNLESS OTHERWISE OR SPECIFICALLY NOTED.
35. HIGH DENSITY POLYETHYLENE PIPE SHALL BE INSTALLED IN ACCORDANCE WITH THE MANUFACTURER'S RECOMMENDATION OR THE PLANS / SPECIFICATIONS; WHICHEVER IS MORE RESTRICTIVE.
36. ALL WATER MAINS TO HAVE A MINIMUM OF 4' (FOUR FEET) OF COVER FROM PROPOSED TOP OF CURB WHEN CONSTRUCTED IN STREET RIGHT-OF-WAY AND 4' (FOUR FEET) OF COVER FROM FINISHED GRADE WHEN CONSTRUCTED WITHIN EASEMENTS. WATER LINES 4" AND LARGER SHALL CONFORM TO ALL REQUIREMENTS OF AWWA C900 - DR 18, CLASS 150, 2". 2-1/2" AND 3" WATER LINES SHALL CONFORM TO ALL REQUIREMENTS OF ASTM D2241 FOR PVC PIPE AND SHALL BE PRESSURE RATED AT 200 P.S.I. WITH A STANDARD DIMENSION RATIO (SDR) OF 21 FOR CLASS 200 FOR BOTH BARREL AND BELL DIMENSIONS. WATER LINES SMALLER THAN 2" SHALL CONFORM TO ALL REQUIREMENTS OF SCHEDULE 40.
37. PIPE SLEEVES ARE TO BE 6" PVC, SCHEDULE 40 PIPE CAPPED AT EACH END. THE TOP OF THE PIPE SLEEVE SHALL BE 12" TO 18" BELOW THE BOTTOM OF CONCRETE PAVEMENT OR WALK. EACH END SHALL EXTEND A MINIMUM OF TWO (2) FEET BEYOND THE EDGE OF CONCRETE PAVEMENT OR WALK. LOCATION OF EACH END TO BE MARKED IN CURB OR PAVEMENT WITH BRASS BOLTS.
38. ROOF DRAIN AND DOWNSPOUT COLLECTOR LINES SHALL BE PVC, SDR-26 PIPE (ASTM D2241) OR SCHEDULE 40 PIPE. LAID AT A MINIMUM GRADE OF 0.50% UNLESS NOTED OTHERWISE. COLLECTOR LINES SHALL BE SIZE ON SIZE AND 6" MINIMUM FOR DOWNSPOUTS. ONCE TWO OR MORE ROOF DRAINS / DOWNSPOUTS ARE CONNECTED THE COLLECTOR LINE (RD AND/OR DS) SHALL BE 12" UNLESS NOTED OTHERWISE. NO 90° BENDS SHALL BE USED. ALL BENDS IN LINES SHALL BE MADE WITH EITHER "WYES" OR DOUBLE 45° BENDS. REFER TO THE ARCHITECTURAL SHEETS FOR EXACT LOCATIONS OF GUTTER DOWNSPOUTS AND/OR MEP SHEETS FOR EXACT LOCATION/ SIZES OF ROOF DRAINS. WHERE DOWNSPOUT COLLECTORS ARE LOCATED IN PAVED AREAS, PROVIDE A 24"X24" BLOCK OUT AROUND PIPE. REFER TO DETAILS.
39. CONTRACTOR SHALL PROVIDE A MINIMUM OF 12" (TWELVE INCHES) VERTICAL CLEARANCE AT STORM SEWER AND WATER LINE CROSSINGS AND AT STORM SEWER AND SANITARY SEWER CROSSINGS, AND A MINIMUM OF 24" (TWENTY FOUR INCHES) VERTICAL CLEARANCE AT WATER LINE AND SANITARY SEWER CROSSINGS.
40. MARK LOCATIONS OF ALL CABLE AND TELEPHONE LINES EXTENDING BENEATH PAVING BY SETTING A 60D GALVANIZED NAIL FLUSH WITH TOP OF CURB (OR TOP OF PAVEMENT WHERE THERE IS NO CURB).
41. CONNECTION TO EXISTING MANHOLES / INLETS SHALL BE MADE IN A NEAT AND WORKMANLIKE MANNER. NON-SHRINK GROUT SHALL BE USED TO SEAL THE CONNECTION ON BOTH THE INSIDE AND OUTSIDE OF EXISTING MANHOLES / INLETS. ANY DAMAGE TO EXISTING STRUCTURES SHALL BE REPAIRED BY THE CONTRACTOR AT NO ADDITIONAL COST TO THE OWNER.
42. THE CONTRACTOR SHALL BE FULLY RESPONSIBLE FOR ANY AND ALL DAMAGE TO EXISTING PUBLIC OR PRIVATE UTILITY LINES, INCLUDING BUT NOT LIMITED TO WATER LINES, WASTEWATER COLLECTION SYSTEMS AND STORM SEWERS, DURING CONSTRUCTION. ALL DAMAGES SHALL BE REPAIRED AT HIS EXPENSE AND IN ACCORDANCE WITH THE AUTHORITY HAVING JURISDICTION AND/OR AS DIRECTED BY THE ENGINEER.

UTILITY NOTES

43. EXISTING UTILITIES SHALL REMAIN IN SERVICE DURING THE CONSTRUCTION PERIOD UNTIL SUCH TIME THAT NEW UTILITIES CAN BE MADE OPERATIONAL.
44. REFER TO THE M.E.P. SHEETS FOR EXACT LOCATIONS OF WATER, FIRE, GAS AND SANITARY SEWER CONNECTIONS AT THE BUILDING.
45. REFERENCE M.E.P. SHEETS FOR REMOVAL AND/OR REROUTING OF ANY ELECTRICAL SERVICES OR ANY UTILITY LINE (ROOF DRAIN, SANITARY SEWER, ETC.) THAT LIES UNDER A PROPOSED STRUCTURE.
46. UTILITY CONTRACTOR SHALL PROVIDE TEMPORARY SILT BARRIER FENCE ON ALL NON-CURB INLETS WHICH WILL REMAIN IN PLACE AFTER UNDERGROUND CONTRACT IS COMPLETE.
47. CONTRACTOR SHALL PROVIDE SILT BARRIER FENCE ON ALL STAGE 1 CURB INLETS.
48. THE CONTRACTOR SHALL INCLUDE IN THE PROPOSAL AN INCIDENTAL AMOUNT FOR THE SAW CUTTING, REMOVAL AND REPLACEMENT OF PAVEMENT AT ALL LOCATIONS WHERE PROPOSED UTILITIES CROSS EXISTING PAVEMENT, WHETHER SHOWN ON THE DRAWINGS OR NOT, THE CONTRACTOR SHALL MATCH THE EXISTING PAVEMENT TYPE, THICKNESS AND GRADES.
49. WHEN CONNECTING TO EXISTING SANITARY SEWERS OR STORM DRAINAGE SYSTEMS, THE CONTRACTOR SHALL START AT THE DOWNSTREAM END AND WORK UPSTREAM. THE CONTRACTOR SHALL ALSO VERIFY THE ELEVATIONS OF THE UPSTREAM AND DOWNSTREAM CONNECTIONS PRIOR TO STARTING WORK. IF ELEVATIONS ARE NOT AS SHOWN ON THE DRAWINGS, CONTACT THE ENGINEER. UNDER NO CIRCUMSTANCES SHALL THE CONTRACTOR START UPSTREAM AND WORK DOWNSTREAM. PIPE SHALL BE INSTALLED WITH THE BELLS AT THE UPSTREAM END.
50. TELEPHONE COMPANY FACILITIES MAY EXIST ON THE PROPERTY. THE CONTRACTOR SHALL DETERMINE THE EXACT LOCATION BEFORE COMMENCING WORK, AND AGREES TO BE FULLY RESPONSIBLE FOR ALL DAMAGES WHICH MIGHT BE OCCASIONED BY A FAILURE TO EXACTLY LOCATE AND PRESERVE THESE UNDERGROUND UTILITIES. THE CONTRACTOR SHALL CALL (800) 344-8377 A MINIMUM OF 48 HOURS PRIOR TO CONSTRUCTION TO HAVE UNDERGROUND LINES FIELD LOCATED. WHEN EXCAVATING WITHIN EIGHTEEN INCHES (18") OF THE INDICATED LOCATION OF TELEPHONE FACILITIES, ALL EXCAVATIONS MUST BE ACCOMPLISHED USING NON-MECHANIZED EXCAVATION PROCEDURES. WHEN BORING THE CONTRACTOR SHALL EXPOSE THE TELEPHONE FACILITIES. WHEN TELEPHONE FACILITIES ARE EXPOSED, THE CONTRACTOR SHOULD PROVIDE SUPPORT TO PREVENT DAMAGE TO THE CONDUIT DUCTS OR CABLES. WHEN EXCAVATING NEAR TELEPHONE POLES THE CONTRACTOR SHALL BRACE THE POLE FOR SUPPORT
51. CAUTION: UNDERGROUND GAS FACILITIES
    GAS LINES (TO INCLUDE UNIT GAS TRANSMISSION AND/OR INDUSTRIAL GAS SUPPLY CORPORATION WHERE APPLICABLE) MAY EXIST ON THE PROPERTY. SERVICE LINES ARE USUALLY NOT SHOWN. THE CONTRACTOR SHALL CONTACT THE UTILITY COORDINATING COMMITTEE AT 811 OR (800) 669-8344 A MINIMUM OF 48 HOURS PRIOR TO CONSTRUCTION TO HAVE MAIN AND SERVICES LINES FIELD LOCATED
    * WHEN GAS LINE MARKINGS ARE NOT VISIBLE CALL (713) 967-8037 (7:00 AM-4:30 PM) FOR STATUS OF LINE LOCATION REQUEST BEFORE EXCAVATION BEGINS.
    * WHEN EXCAVATING WITHIN 18" OF THE INDICATED LOCATION OF GAS FACILITIES, ALL EXCAVATION MUST BE ACCOMPLISHED USING NON-MECHANIZED EXCAVATION PROCEDURES.
    * WHEN GAS FACILITIES ARE EXPOSED, SUFFICIENT SUPPORT MUST BE PROVIDED TO THE FACILITIES TO PREVENT EXCESSIVE STRESS ON THE PIPING

    THE CONTRACTOR IS FULLY RESPONSIBLE FOR ANY DAMAGES CAUSED BY HIS FAILURE TO EXACTLY LOCATE AND PRESERVE THESE UNDERGROUND FACILITIES.
52. WARNING: OVERHEAD ELECTRICAL FACILITIES
    OVERHEAD LINES MAY EXIST ON THE PROPERTY. THESE LINES ARE CLEARLY VISIBLE, AND IT IS THE CONTRACTOR'S RESPONSIBILITY TO LOCATE THEM PRIOR TO BEGINNING ANY CONSTRUCTION. TEXAS LAW, SECTION 752, HEALTH & SAFETY CODE, FORBIDS ALL ACTIVITIES IN WHICH PERSONS OR THINGS MAY COME WITHIN 6' OF LIVE OVERHEAD HIGH VOLTAGE LINES. PARTIES RESPONSIBLE FOR THE WORK, INCLUDING CONTRACTORS, ARE LEGALLY RESPONSIBLE FOR THE SAFETY OF CONSTRUCTION WORKERS UNDER THIS LAW. THIS LAW CARRIES BOTH CRIMINAL AND CIVIL LIABILITY. TO ARRANGE FOR LINES TO BE TURNED OFF OR REMOVED CALL POWER COMPANY AT (713) 207-2222 (CENTERPOINT).

    WARNING: UNDERGROUND ELECTRICAL FACILITIES
    UNDERGROUND ELECTRICAL FACILITIES MAY EXIST ON THE PROPERTY. AT LEAST 48 HOURS PRIOR TO CONSTRUCTION, CALL THE UCC AT 811, OR TOLL FREE AT (800) 669-8344, TO VERIFY THAT NO UNDERGROUND FACILITIES EXIST.
53. ALL UNDERGROUND PIPE SHALL HAVE A 12 GAUGE METALLIC TRACER WIRE RUNNING THE FULL LENGTH OF THE PIPE. TRACER WIRE SHALL BE TAPED TO THE PIPE AT INTERVALS NOT TO EXCEED 15 FEET USING DUCT TAPE.

PAVING AND GRADING NOTES

54. REFERENCE THE ARCHITECTURAL SITE PLAN FOR SIDEWALK JOINT PATTERN. SIDEWALK JOINTS SHALL ALIGN WITH PAVING JOINTS WHEN SIDEWALK IS ADJACENT TO PAVING.
55. THE INLETS/MANHOLES SHALL BE COORDINATED WITH THE LOCATION OF PAVEMENT JOINT PATTERN WITHIN PAVEMENT AREAS.
56. EXPANSION JOINT MATERIAL SHALL BE PLACED BETWEEN THE BUILDING AND PERIMETER CONCRETE PAVING. SEAL JOINT AS REQUIRED FOR PAVING JOINTS.
57. UNLESS OTHERWISE SPECIFIED, ALL PAVEMENT JOINT SEALANT SHALL BE SELF-LEVELING SILICONE JOINT SEALANT, (DOWSIL890-SL SILICONE JOINT SEALANT, DAP® SILICONE PLUS™ PREMIUM SILICONE RUBBER CONCRETE SEALANT, GE SILICONE II MASONRY & CONCRETE SEALANT - 5020, 5IKASIL - 728 SL, OR PRE-APPROVED EQUIVALENT.)
58. REFER TO STRUCTURAL FOR ANY DOWELS REQUIRED TYING THE BUILDING FOUNDATION AND ADJACENT CONCRETE PAVING TOGETHER.
59. SAWED JOINTS & TRANSVERSE JOINTS ARE TO BE EQUALLY SPACED BETWEEN EXPANSION JOINTS.
60. SAWING OF JOINTS MUST BEGIN AS SOON AS THE CONCRETE HAS HARDENED SUFFICIENTLY TO AVOID EXCESSIVE RAVELING. REFER TO SPECIFICATIONS FOR ADDITIONAL INFORMATION.
61. THE CONTRACTOR SHALL REPLACE ANY DAMAGED AND/OR REMOVED CONCRETE PAVEMENT, CURB AND/OR WALK TO EQUAL OR BETTER THAN EXISTING CONDITION. IT SHALL BE THE CONTRACTORS RESPONSIBILITY TO INCLUDE ANY CONCRETE PAVEMENT, CURB OR WALK REMOVAL AND REPLACEMENT IN HIS BID AS AN INCIDENTAL TO THE COST OF CONSTRUCTION.
62. THE CONTRACTOR SHALL GRADE THE SITE AS INDICATED BY THE CONTOUR LINES. DIRECTIONAL ARROWS AND ELEVATIONS SHOWN ON DRAWINGS. ALL GRADING SHALL VARY UNIFORMLY BETWEEN ELEVATIONS SHOWN.
63. AT ALL DOORWAYS, THE LANDING SHALL SLOPE AT A MAXIMUM OF 2% AWAY FROM DOORWAY FOR A MINIMUM OF 5 FEET. MATCH FINISH FLOOR ELEVATION AT FACE OF DOORWAYS.
64. THE CONTRACTOR SHALL BE RESPONSIBLE FOR CONSTRUCTING SILT FENCE OR PLACING SQUARE HAY BALES AT ALL POINTS WHERE STORMWATER RUNOFF EXITS THE SCHOOL PROPERTY, AND AT ALL STORM SEWER INLETS AND MANHOLES, TO PREVENT SEDIMENT CONTAMINATION OF THE EXISTING DRAINAGE ARTERIES AND NEW STORM SEWERS DURING CONSTRUCTION OF OF THIS PROJECT. REFERENCE "STORM WATER POLLUTION PREVENTION PLAN".
65. SITE TO BE CLEARED OF VEGETATION AND DEBRIS AS NECESSARY TO COMPLETE PROJECT OR AS DIRECTED BY ENGINEER. STRIPPINGS, IF CLEAN, ARE TO BE STOCKPILED AND USED AS DRESSING FOR GRADING, OTHERWISE THE STRIPPINGS SHALL BE DISPOSED OF BY THE CONTRACTOR.
66. ALL EXCESS DEBRIS, TREES, AND/OR WASTE MATERIALS SHALL BE REMOVED FROM THE SITE AND DISPOSED OF PROPERLY. ALL ASSOCIATED COST SHALL BE AT THE EXPENSE OF THE CONTRACTOR.
67. BACKFILL TO TOP OF NEW PAVEMENT OR CURBS WITH CLEAN SOIL FREE OF CLODS, ALL DISTURBED AREAS AND AREAS REQUIRING GRADING SHALL BE FINE GRADED. REMOVE ALL TRASH/DEBRIS AND PROVIDE A SMOOTH SURFACE FOR PROPER TURF MANAGEMENT. UNGRADED DISTURBED AREAS NOT NOTED TO BE SOLID SOD OR AS DIRECTED BY THE ENGINEER.
68. WHERE NEW CONCRETE PAVING MEETS EXISTING CONCRETE PAVING, INSTALL 3/4" SMOOTH DOWELS, (18" LONG AND 18" C-C), BY DRILLING 8" INTO THE CENTER OF THE EXISTING SLAB AND EMBEDDING WITH EPOXY. WHEN PAVING UP TO BUILDING FOUNDATIONS, ALSO INSTALL IMPREGNATED FIBER BOARD EXPANSION MATERIAL WITH TOP PULL STRIP FOR CAULKING.
69. PAVEMENT GRADES SHALL VARY UNIFORMLY BETWEEN ELEVATIONS SHOWN.
70. SECURE PRECAST CONCRETE WHEEL STOPS BY DRILLING AND SETTING #4 DOWELS INTO PAVEMENT.
71. FILL AREAS NOTED ON PLANS SHALL BE FILLED IN LAYERS NOT EXCEEDING 8" IN DEPTH AND EACH LAYER COMPACTED TO NOT LESS THAN 95% STANDARD PROCTOR DENSITY. FILL AREA SHALL BE SEEDED AND FERTILIZED WITHIN 10 WORKING DAYS.
72. CONTRACTOR SHALL INSTALL A GRASS SOLID SOD ADJACENT TO ALL PROPOSED CURBS, DRIVES AND /OR WALKS.
73. MATCH ALL ELEVATIONS WHERE PROPOSED PAVEMENT ADJOINS EXISTING PAVEMENT.
74. PRIOR TO ANY CHEMICAL STABILIZATION OF SOIL WITH LIME, FLY ASH OR ANY OTHER MATERIAL AS RECOMMENDED BY THE GEOTECHNICAL ENGINEER, CONTRACTOR SHALL HAVE A THIRD PARTY TESTING LAB PERFORM A SOIL ANALYSIS, INCLUDING BUT NOT LIMITED TO A LIME SERIES TEST, TO CONFIRM THE REQUIRED APPLICATION RATE OF THE CHEMICAL USED FOR STABILIZATION.
75. TOPSOIL SHALL BE FERTILE, FRIABLE, NATURAL SANDY LOAM SURFACE SOIL WITH A MINIMUM OF 4 PERCENT ORGANIC MATERIAL CONTENT FREE OF STONES 1 INCH OR LARGER IN ANY DIMENSION AND OTHER EXTRANEOUS MATERIALS HARMFUL TO PLANT GROWTH. COMPLY WITH ASTM D 5268.
76. HYDROMULCH ALL DISTURBED AREAS, UNLESS OTHERWISE NOTED. HYDROMULCH TO BE INSTALLED 90 DAYS PRIOR TO SUBSTANTIAL COMPLETION OR AS SOON AS POSSIBLE IN ORDER TO ESTABLISH GROW-IN PER SPEC. ALTERNATIVELY, GENERAL CONTRACTOR TO PROVIDE SOLID SOD IN LIEU OF HYDROMULCH.

GENERAL NOTES

CIVIL LEGEND

201	PROPOSED CONTOUR
	PROPOSED CATCH BASIN (C-1)
	PROPOSED "A" INLET (A-1)
	PROPOSED "E" INLET (E-1)
	PROPOSED STORM MANHOLE W/ GRATE TOP
	PROPOSED MANHOLE
	PROPOSED CURB INLET OR JUNCTION BOX INLET
	GATE VALVE & BOX
	PIPE SLEEVES
	PROP. 45° EL
	TAPPING SLEEVE & VALVE
TC	TOP OF CURB ELEVATION
TP	TOP OF PAVEMENT ELEVATION
TG	TOP OF GRATE ELEVATION
TR	TOP OF RIM (MANHOLE)
FG	FINISH GRADE ELEVATION
MEG	MATCH EXISTING GRADE
FL	FLOWLINE ELEVATION
	SWALE
TFL	THROAT FLOWLINE ELEVATION ("E" INLET)
FH	FIRE HYDRANT
MH	MANHOLE
CO	CLEAN OUT
DCO	DOUBLE CLEAN OUT
DS	DOWNSPOUT COLLECTOR
NIC	NOT IN CONTRACT
RD	ROOF DRAIN COLLECTOR
GV	GATE VALVE
STM	STORM SEWER
SAN	SANITARY SEWER
RCP	REINFORCED CONCRETE PIPE
HDPE	HIGH DENSITY POLYETHYLENE
FFF	FILTER FABRIC FENCE
RFB	REINFORCED FABRIC BARRIER
IPB	INLET PROTECTION BARRIER
X	EXPANSION JOINT
L	LONGITUDINAL CONSTRUCTION JOINT
LT	LONGITUDINAL-TIED CONSTRUCTION JOINT
T	TRANSVERSE CONTRACTION JOINT
S	SAWED PAVEMENT JOINT
UE	UTILITY EASEMENT
SSE	SANITARY SEWER EASEMENT
EP	EDGE OF PAVEMENT
HB	HIGH BANK OF DITCH
CL	CENTERLINE OF DITCH
PP	POWER POLE
GW	GUY WIRE
GM	GAS METER
PB	PHONE BOX
FC	FENCE CORNER
CB	CABLE BOX
NG	NATURAL GROUND
+ 0.00	EXISTING ELEVATION
+ TP XX.XX	PROPOSED ELEVATION
	ATHLETIC LIGHTPOLE
	ELECTRICAL PEDISTAL
	HOSE BIB

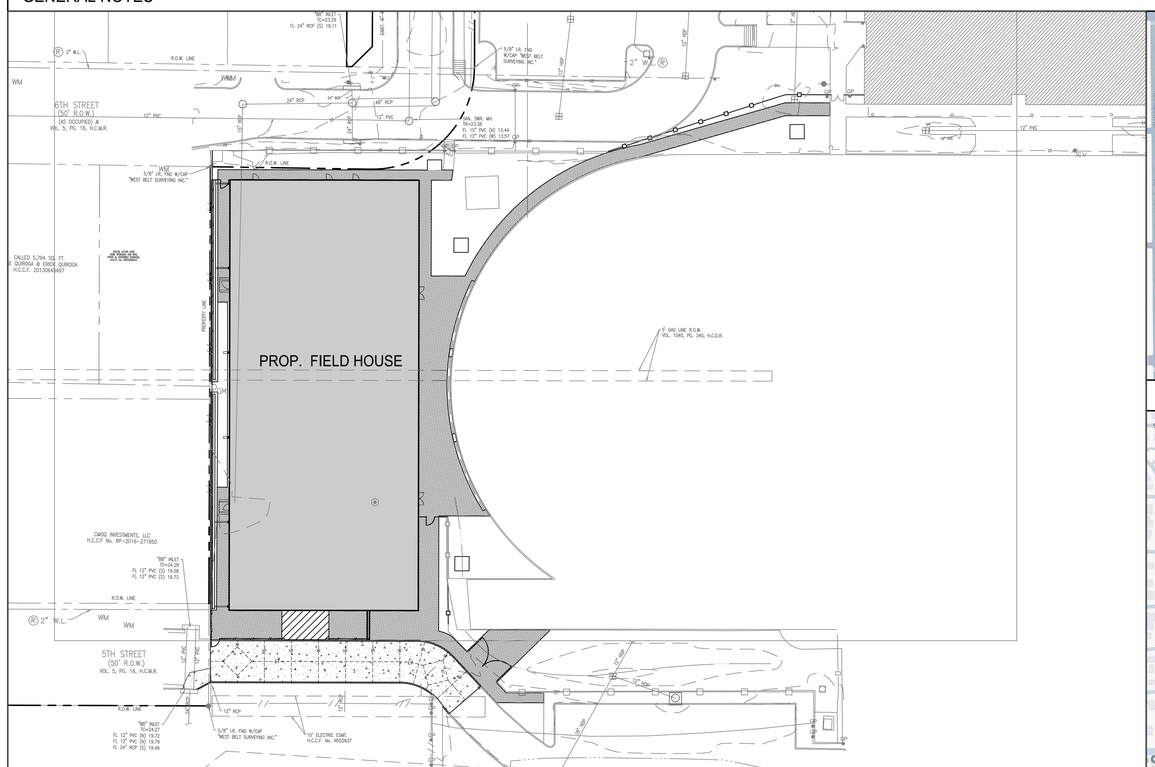

SITE PLAN

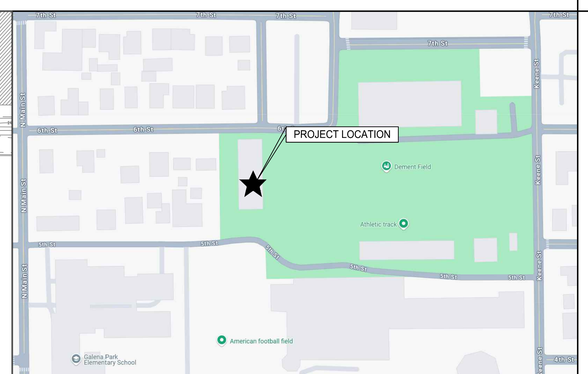

LOCATION

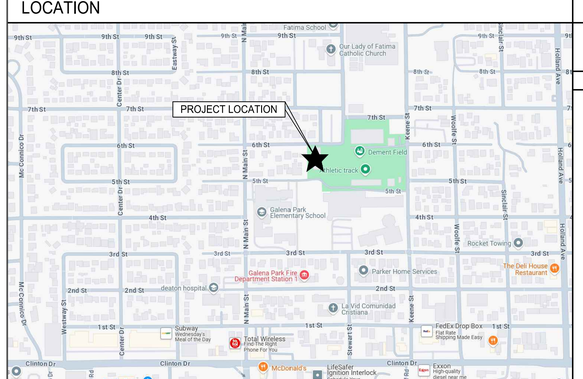

VICINITY

ADDRESS
ADDRESS

PERMITTING INFORMATION

PROJECT NAME:
GPHS - FIELD HOUSE

LEGAL DESCRIPTION:
RES A BLK 1
(SCHOOL & RELATED USES)
GALENA PARK ISD EDUCATIONAL CAMPUS

PHYSICAL ADDRESS:
1000 KEENE ST.
GALENA PARK, TX 77547

TOTAL ACREAGE OF EXISTING LOT:
32.504 ACRES

INDEX OF DRAWINGS

SHEET	DESCRIPTION
C 001	NOTES, INDEX, AND LEGEND
C 002A	SURVEY (FOR INFORMATION ONLY)
C 002B	SURVEY (FOR INFORMATION ONLY)
C 002C	SURVEY (FOR INFORMATION ONLY)
C 002D	SURVEY (FOR INFORMATION ONLY)
C 003	DEMOLITION PLAN
C 101	SITE PLAN
C 102	DIMENSIONAL CONTROL PLAN
C 103	FIRE APPARATUS & SAFETY PLAN
C 201	DRAINAGE AND UTILITY PLAN
C 202	DRAINAGE AREA MAP
C 301	GRADING AND PAVING PLAN
C 401	EROSION CONTROL PLAN
C 501	DETAILS
C 502	DETAILS

PBK
www.pbk.com
TX FIRM: BR 1608
HOUSTON, TX
713-862-0008

PKG 3A - GPHS NEW FIELDHOUSE

1000 Keene St.
Galena Park, TX 77547

CLIENT PROJECT NO: 240539

ISSUE FOR PROPOSAL

STATE OF TEXAS
RAJEEB K. RAJBHANDARI
116968
LICENSED
PROFESSIONAL ENGINEER
06/10/2025
PBK ENGINEERS
F-18326

CLIENT	
DATE: June 10, 2025	PROJECT NUMBER: 240539

DRAWING HISTORY

No.	Description	Date

CHECKED BY: RR
DRAWN BY: KS

NOTES, INDEX, AND LEGEND

C 001

B:\240539 - GPHS MP\FOCD\GD\dwgs\C 001 NOTES INDEX AND LEGEND.dwg Last Saved: KENDAHLSMITH
Wednesday, June 11, 2025 9:37:43 AM

DETAILS

DETAIL 1
"BB" INLET
TC=23.19
FL 24" RCP (W) 18.26

DETAIL 2
STM. SWR. MH.
TR=23.05
FL 36" RCP (S) 15.69
FL 24" RCP (W) 17.57
FL 24" RCP (E) 17.54

DETAIL 3
"BB" INLET
TC=23.23
FL 24" RCP (E) 18.02

DETAIL 4
STM. SWR. MH.
TR=23.70
FL 24" HDP (N) 16.97
FL 15" HDP (E) 17.39
FL 15" HDP (E) 17.33
FL 24" RCP (W) 16.85

DETAIL 5
"BB" INLET
TC=22.68
FL 24" RCP (E) 16.62
FL 24" RCP (SW) 16.77

DETAIL 6
STM. SWR. MH.
TR=22.48
FL 24" RCP (NE) 16.04
FL 36" RCP (SW) 15.39
FL 36" RCP (N) 15.35

DETAIL 7
STM. SWR. MH.
TR=22.57
FL 36" RCP (NE) 15.38
FL 36" RCP (W) 15.54

DETAIL 8
STM. SWR. MH.
TR=22.57
FL 36" RCP (E) 15.72
FL 36" RCP (W) 15.45
FL 24" RCP (N) 16.81

DETAIL 9
SAN. SWR. MH.
TR=25.32
FL 8" PVC (W) 19.64
FL 8" PVC (N) 19.93
FL 8" PVC (E) 19.74

DETAIL 10
SAN. SWR. MH.
TR=24.48
FL 8" PVC (S) 19.46
FL 8" PVC (E) 19.47

DETAIL 11
GRATE INLET
TG=24.17
FL 12" HDP (S) 21.98

DETAIL 12
GRATE INLET
TG=24.67
FL 12" HDP (S) 21.65
FL 12" HDP (N) 21.93

DETAIL 13
GRATE INLET
TG=24.71
FL 12" HDP (S) 19.68
FL 12" HDP (N) 20.90
FL 18" HDP (E) 20.28

DETAIL 14
SAN. SWR. MH.
TR=24.92
FL 8" PVC (S) 18.75
FL 8" PVC (N) 18.76
FL 8" PVC (E) 19.95

DETAIL 15
GRATE INLET
TG=24.33
FL 12" HDP (N) 19.75
FL 18" HDP (SW) 19.64
FL 12" HDP (NW) 20.63

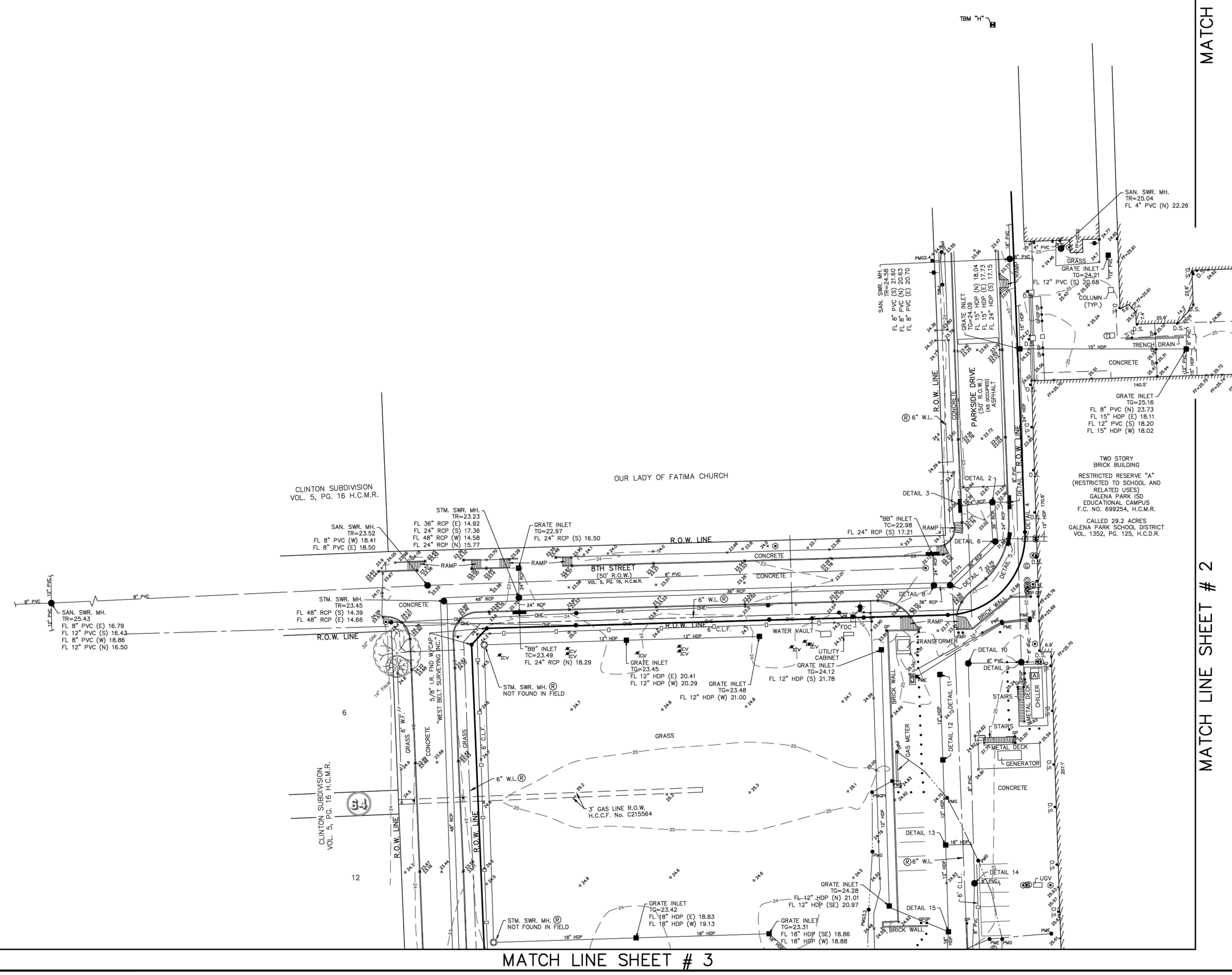

VICINITY MAP

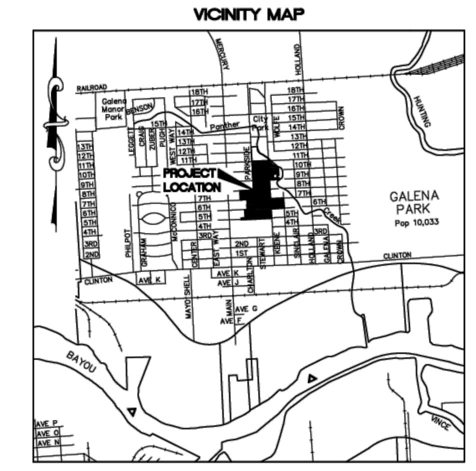

KEY MAP 496W
SCALE 1" = 3000'

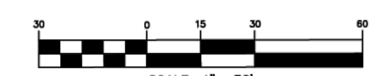

SCALE: 1"= 30'

LEGEND

- AIR CONDITIONING UNIT
- "B" INLET
- "BB" INLET
- BENCHMARK
- BOLLARD
- "C" INLET
- CLEANOUT
- DOWN SPOUT
- ELECTRIC JUNCTION BOX
- FIRE HYDRANT
- GAS METER
- GAS VALVE
- GATE POST
- GRATE TOP MANHOLE
- GREASE TRAP
- GUY WIRE
- HOSE BIB
- INLET
- IRRIGATION CONTROL VALVE
- LIGHT STANDARD
- MAILBOX
- MANHOLE
- PAINT MARKER (COMMUNICATIONS)
- PAINT MARKER (ELECTRIC)
- PAINT MARKER (GAS)
- PEDESTAL
- PIPELINE MARKER
- POWER POLE
- SAMPLE WELL
- SIGN
- STAND PIPE
- TRASH CAN
- WATER METER
- WATER VALVE

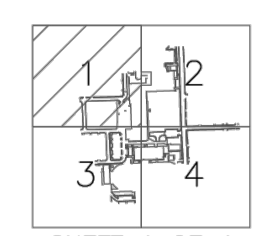

SHEET 1 OF 4

TO: GALENA PARK INDEPENDENT SCHOOL DISTRICT

THIS SURVEY SUBSTANTIALLY COMPLIES WITH THE CURRENT TEXAS SOCIETY OF PROFESSIONAL SURVEYORS MANUAL OF PRACTICE REQUIREMENTS FOR A CATEGORY 6, CONDITION 1 SURVEY AND THE CURRENT MINIMUM REQUIREMENTS OF THE PROFESSIONAL LAND SURVEYING ACT.

5/7/25
DATE

JOEL D. WALKER, R.P.L.S.
TEXAS REGISTRATION NO. 5189

SURVEYOR'S NOTES:

1. THE BEARINGS SHOWN HEREON ARE BASED ON THE TEXAS COORDINATE SYSTEM, SOUTH CENTRAL ZONE, NAD 83.

2. ACCORDING TO F.I.R.M. MAP NO. 48201C0905M (COMMUNITY-PANEL NO. 4802930905M), MAP REVISED DATE: JANUARY 6, 2017. THE SUBJECT PROPERTY LIES WITHIN THE AREA DESIGNATED AS ZONE "X" UNSHADED. AREAS DETERMINED TO BE OUTSIDE THE 0.2% ANNUAL CHANCE FLOODPLAIN AND ZONE "X" SHADED. AREAS OF 0.2% ANNUAL CHANCE FLOOD; AREAS OF 1% ANNUAL CHANCE FLOOD WITH AVERAGE DEPTHS OF LESS THAN 1 FOOT OR WITH DRAINAGE AREAS LESS THAN 1 SQUARE MILE; AND AREAS PROTECTED BY LEVEES FROM 1% ANNUAL CHANCE FLOOD.

THIS STATEMENT IS BASED ON SCALING THE LOCATION OF THE SUBJECT TRACT ON THE ABOVE REFERENCED MAP. THIS INFORMATION IS TO DETERMINE FLOOD INSURANCE RATES ONLY AND IS NOT INTENDED TO IDENTIFY SPECIFIC FLOODING CONDITIONS.

3. ALL UTILITIES SHOWN HEREON ARE LOCATED USING "APPARENT & VISIBLE" EVIDENCE BY ON-SITE OBSERVATION UNLESS OTHERWISE NOTED.

4. —⌐ INDICATES AN UNDERGROUND SEWER LINE WITH UNKNOWN DIRECTION, SIZE OR LOCATION OR A POSSIBLE STUB-OUT.

5. UNDERGROUND UTILITY LOCATIONS PROVIDED BY LONESTAR LOCATING, LLC. PAINT MARKS WITH NUMERIC VALUES INDICATES COVER (FEET AND INCHES) DETERMINED BY ELECTRONIC TONING.

ALWAYS CONTACT TEXAS 811 PRIOR TO DIGGING. SOME UTILITIES SUCH AS FIBER OPTIC W/O TRACERS, PLASTIC GAS, FIBERGLASS/PVC ARE NOT LOCATABLE BY TRANSMISSION SIGNAL.

6. SUBJECT TRACT IS AFFECTED BY GALENA PARK CODE OF ORDINANCES AND IS ZONED AS "DISTRICT C".

7. Ⓡ INDICATES RECORD UTILITIES PLOTTED FROM MAPS PREPARED BY BROOKS & SPARKS, INC. PROJECT NO. 725-0147, DATED JANUARY 2022.

REFERENCE BENCHMARK:

RM070475 – BRASS DISK STAMPED "PAN CR 5 1968" LOCATED ON THE NORTHWEST CORNER OF BRIDGE ON CLINTON DRIVE OVER PANTHER CREEK IN KEY MAP 496X IN THE SAN JACINTO RIVER WATERSHED NEAR STREAM 112-00-00. ELEVATION=11.58' (NAVD 88, 2001 ADJ.)

TEMPORARY BENCHMARKS:

TBM "H" – BOX CUT ON CONCRETE BASE OF METAL POWER POLE LOCATED ON THE EAST SIDE OF PARKSIDE DRIVE AND ON THE WEST SIDE OF THE SHEFFIELD CAREER & TECHNOLOGY CENTER BUILDING. ELEVATION=27.05'

ABBREVIATIONS

C.L.F.–CHAIN LINK FENCE
CBC–CONCRETE BOX CULVERT
CMC–CREPE MYRTLE CLUSTER
CMP–CORRUGATED METAL PIPE
CONC.–CONCRETE
ESMT.–EASEMENT
FC–FILM CODE
FDC–FIRE DEPARTMENT CONNECT
FF–FINISH FLOOR
FL–FLOW LINE
FND.–FOUND
H.C.C.F.–HARRIS COUNTY CLERK'S FILE
H.C.M.R.–HARRIS COUNTY MAP RECORDS
HDP–HIGH DENSITY POLYETHYLENE PIPE
I.P.–IRON PIPE
I.R.–IRON ROD
MH–MANHOLE
OHE–OVERHEAD ELECTRIC
PG.–PAGE
PVC–POLYVINYL CHLORIDE PIPE
RCP–REINFORCED CONCRETE PIPE
R.O.W.–RIGHT-OF-WAY
SAN.–SANITARY
STM.–STORM
SWR.–SEWER
TRF–PAD MOUNTED TRANSFORMER
TG–TOP OF GRATE
TR–TOP OF RIM
TYP.–TYPICAL
U.E.–UTILITY EASEMENT
UGV–UNDERGROUND VAULT
VOL.–VOLUME
W.I.F.–WROUGHT IRON FENCE
W.L.E.–WATER LINE EASEMENT
W.F.–WOOD FENCE

GALENA PARK INDEPENDENT SCHOOL DISTRICT

TOPOGRAPHIC SURVEY

GALENA PARK HIGH SCHOOL OUT OF THE EZEKIEL THOMAS SURVEY ABSTRACT NO. 73 CITY OF GALENA PARK, HARRIS COUNTY, TEXAS

WEST BELT SURVEYING, INC.
21020 PARK ROW KATY, TX. 77449
PHONE: (281) 599-8288 FAX: (281) 492-6026
CERTIFIED FIRM NO. 10073800

NO.	DATE	REVISIONS	BY
2	5/7/25	ADDRESSED COMMENTS	DB
1	4/17/25	ADDED NOTE 7 AND RECORD UTILITIES	DB

DRAWN BY: DB	CHECKED BY: MDL
SCALE: 1"=30'	APPROVED BY: JDW
PROJECT NO. S425-0061C	DATE: APRIL 8, 2025

PBK
www.pbk.com
TX FIRM: BR 1608
HOUSTON, TX
713-965-0608

PKG 3A - GPHS NEW FIELDHOUSE

1000 Keene St,
Galena Park, TX 77547

CLIENT PROJECT NO: 240539

ISSUE FOR PROPOSAL

CLIENT	
DATE June 10, 2025	PROJECT NUMBER 240539

DRAWING HISTORY

No.	Description	Date

CHECKED BY: RR
DRAWN BY: KS

SURVEY (FOR INFORMATION ONLY)

C 002A

07 May 2025 8:53AM darrenb
G:\sdsk\proj\S425006 1C\DWG\T050625.dwg
B:\24\240539 - GPHS MP\FOC\DIG\Dwgs\C 002A SURVEY.dwg Last Saved: KENDAHL.SMITH
Thursday, June 5, 2025 11:43:02 AM

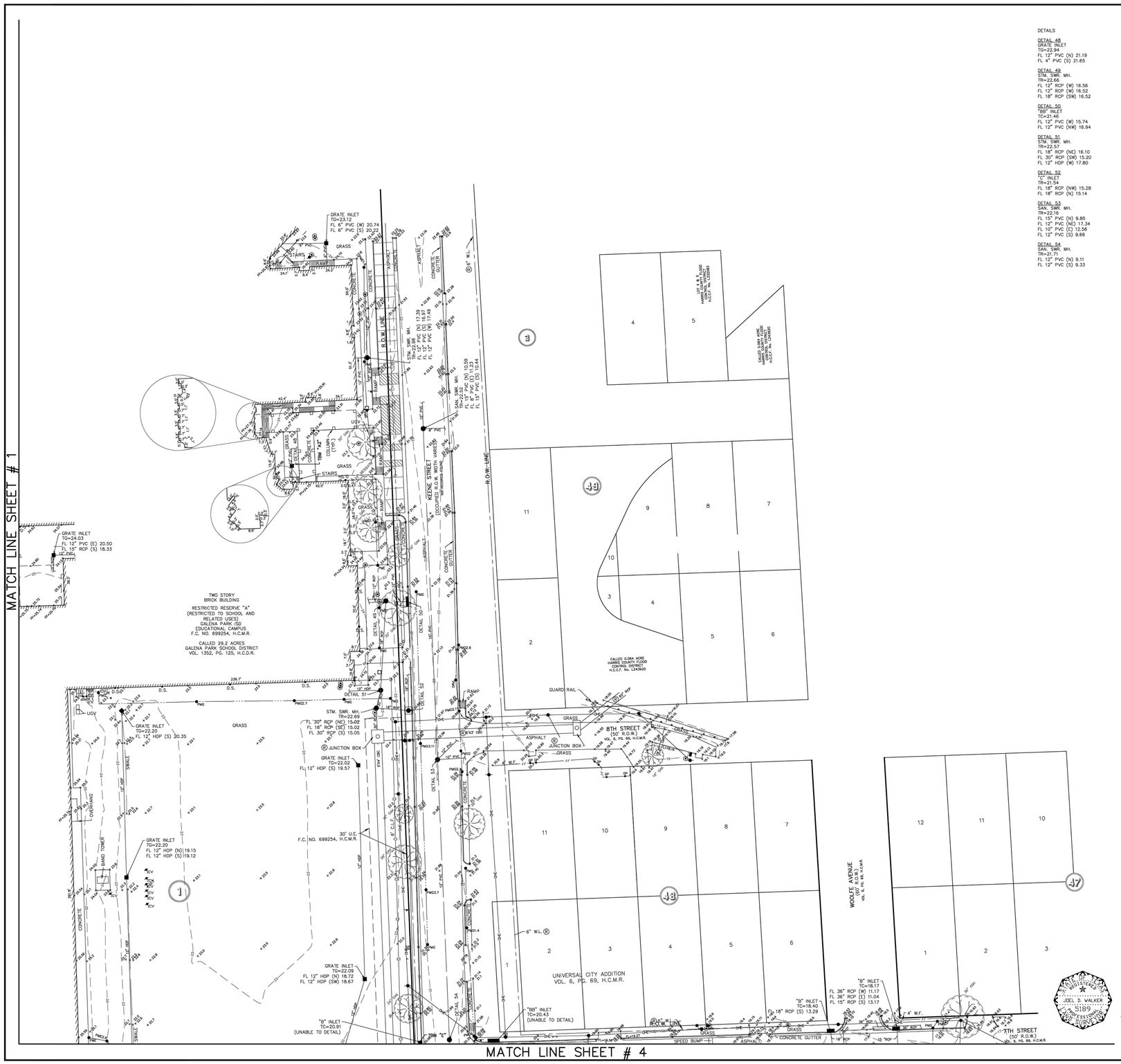

DETAILS

DETAIL 48
GRATE INLET
TG=22.94
FL 12" PVC (N) 21.19
FL 4" PVC (S) 21.65

DETAIL 49
STM. SWR. MH.
TR=22.66
FL 12" RCP (W) 16.56
FL 12" RCP (W) 16.52
FL 18" RCP (SW) 16.52

DETAIL 50
"BB" INLET
TC=21.46
FL 12" PVC (W) 15.74
FL 12" PVC (NW) 16.94

DETAIL 51
STM. SWR. MH.
TR=22.57
FL 18" RCP (NE) 16.10
FL 30" RCP (SW) 15.20
FL 12" HDP (W) 17.80

DETAIL 52
"C" INLET
TR=21.54
FL 18" RCP (NW) 15.28
FL 18" RCP (N) 15.14

DETAIL 53
SAN. SWR. MH.
TR=22.16
FL 13" PVC (N) 9.85
FL 12" PVC (NE) 17.34
FL 10" PVC (E) 12.56
FL 12" PVC (S) 9.66

DETAIL 54
SAN. SWR. MH.
TR=21.71
FL 12" PVC (N) 9.11
FL 12" PVC (S) 9.33

VICINITY MAP

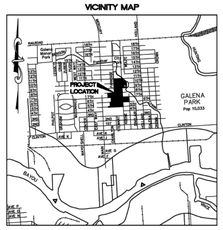

KEY MAP 496W
SCALE 1" = 3000'

SCALE: 1"= 30'

LEGEND

- AIR CONDITIONING UNIT
- "B" INLET
- "BB" INLET
- BENCHMARK
- BOLLARD
- "C" INLET
- CLEANOUT
- DOWN SPOUT
- ELECTRIC JUNCTION BOX
- FIRE HYDRANT
- GAS METER
- GAS VALVE
- GATE POST
- GRATE TOP MANHOLE
- GREASE TRAP
- GUY WIRE
- HOSE BIB
- INLET
- IRRIGATION CONTROL VALVE
- LIGHT STANDARD
- MAILBOX
- MANHOLE
- PAINT MARKER (COMMUNICATIONS)
- PAINT MARKER (ELECTRIC)
- PAINT MARKER (GAS)
- PEDESTAL
- PIPELINE MARKER
- POWER POLE
- SAMPLE WELL
- SIGN
- STAND PIPE
- TRASH CAN
- WATER METER
- WATER VALVE

SURVEYOR'S NOTES:

1. THE BEARINGS SHOWN HEREON ARE BASED ON THE TEXAS COORDINATE SYSTEM, SOUTH CENTRAL ZONE, NAD 83.

2. ACCORDING TO F.I.R.M. MAP NO. 48201C0905M (COMMUNITY–PANEL NO. 4802930905M); MAP REVISED DATE: JANUARY 6, 2017. THE SUBJECT PROPERTY LIES WITHIN THE AREA DESIGNATED AS ZONE "X" UNSHADED, AREAS DETERMINED TO BE OUTSIDE THE 0.2% ANNUAL CHANCE FLOODPLAIN AND ZONE "X" SHADED, AREAS OF 0.2% ANNUAL CHANCE FLOOD; AREAS OF 1% ANNUAL CHANCE FLOOD WITH AVERAGE DEPTHS OF LESS THAN 1 FOOT OR WITH DRAINAGE AREAS LESS THAN 1 SQUARE MILE; AND AREAS PROTECTED BY LEVEES FROM 1% ANNUAL CHANCE FLOOD.

THIS STATEMENT IS BASED ON SCALING THE LOCATION OF THE SUBJECT TRACT ON THE ABOVE REFERENCED MAP. THIS INFORMATION IS TO DETERMINE FLOOD INSURANCE RATES ONLY AND IS NOT INTENDED TO IDENTIFY SPECIFIC FLOODING CONDITIONS.

3. ALL UTILITIES SHOWN HEREON ARE LOCATED USING "APPARENT & VISIBLE" EVIDENCE BY ON–SITE OBSERVATION UNLESS OTHERWISE NOTED.

4. ⟶ INDICATES AN UNDERGROUND SEWER LINE WITH UNKNOWN DIRECTION, SIZE OR LOCATION OR A POSSIBLE STUB–OUT.

5. UNDERGROUND UTILITY LOCATIONS PROVIDED BY LONESTAR LOCATING, LLC. PAINT MARKS WITH NUMERIC VALUES INDICATES COVER (FEET AND INCHES) DETERMINED BY ELECTRONIC TONING.

ALWAYS CONTACT TEXAS 811 PRIOR TO DIGGING. SOME UTILITIES SUCH AS FIBER OPTIC W/O TRACERS, PLASTIC GAS, FIBERGLASS/PVC ARE NOT LOCATABLE BY TRANSMISSION SIGNAL.

6. SUBJECT TRACT IS AFFECTED BY GALENA PARK CODE OF ORDINANCES AND IS ZONED AS "DISTRICT C".

7. Ⓡ INDICATES RECORD UTILITIES PLOTTED FROM MAPS PREPARED BY BROOKS & SPARKS, INC. PROJECT NO. 725–0147, DATED JANUARY 2022.

REFERENCE BENCHMARK:

RM070475 – BRASS DISK STAMPED "PAN CR 5 1968" LOCATED ON THE NORTHWEST CORNER OF BRIDGE ON CLINTON DRIVE OVER PANTHER CREEK IN KEY MAP 496X IN THE SAN JACINTO RIVER WATERSHED NEAR STREAM 112–00–00. ELEVATION=11.58' (NAVD 88, 2001 ADJ.)

TEMPORARY BENCHMARKS:

TBM "E" – BOX CUT ON THE NORTHWEST CORNER OF "C" INLET LOCATED AT THE NORTHWEST CORNER OF KEENE STREET AND 7TH STREET.
ELEVATION=20.94'

TBM "A2" – BOX CUT ON NORTHEAST CORNER OF CONCRETE SURROUNDING GRATE INLET.
ELEVATION=23.01'

ABBREVIATIONS

C.L.F.–CHAIN LINK FENCE
CBC–CONCRETE BOX CULVERT
CMC–CREPE MYRTLE CLUSTER
CMP–CORRUGATED METAL PIPE
CONC.–CONCRETE
ESMT.–EASEMENT
FC–FILM CODE
FDC–FIRE DEPARTMENT CONNECT
FF–FINISH FLOOR
FL–FLOW LINE
FND.–FOUND
H.C.C.F.–HARRIS COUNTY CLERK'S FILE
H.C.M.R.–HARRIS COUNTY MAP RECORDS
HDP–HIGH DENSITY POLYETHYLENE PIPE
I.P.–IRON PIPE
I.R.–IRON ROD
MH–MANHOLE
OHE–OVERHEAD ELECTRIC
PG.–PAGE
PVC–POLYVINYL CHLORIDE PIPE
RCP–REINFORCED CONCRETE PIPE
R.O.W.–RIGHT–OF–WAY
SAN.–SANITARY
STM.–STORM
SWR.–SEWER
TRF–PAD MOUNTED TRANSFORMER
TG–TOP OF GRATE
TR–TOP OF RIM
TYP.–TYPICAL
U.E.–UTILITY EASEMENT
UGV–UNDERGROUND VAULT
VOL.–VOLUME
W.I.F.–WROUGHT IRON FENCE
W.L.E.–WATER LINE EASEMENT
W.F.–WOOD FENCE

GALENA PARK INDEPENDENT SCHOOL DISTRICT

TOPOGRAPHIC SURVEY

GALENA PARK HIGH SCHOOL OUT OF THE EZEKIEL THOMAS SURVEY ABSTRACT NO. 73 CITY OF GALENA PARK, HARRIS COUNTY, TEXAS

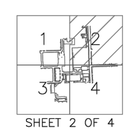

SHEET 2 OF 4

TO: GALENA PARK INDEPENDENT SCHOOL DISTRICT

THIS SURVEY SUBSTANTIALLY COMPLIES WITH THE CURRENT TEXAS SOCIETY OF PROFESSIONAL SURVEYORS MANUAL OF PRACTICE REQUIREMENTS FOR A CATEGORY 6, CONDITION 1 SURVEY AND THE CURRENT MINIMUM REQUIREMENTS OF THE PROFESSIONAL LAND SURVEYING ACT.

5/7/25
DATE

JOEL D. WALKER, R.P.L.S.
TEXAS REGISTRATION NO. 5189

JOEL D. WALKER 5189 REGISTERED PROFESSIONAL LAND SURVEYOR STATE OF TEXAS

WEST BELT SURVEYING, INC.
21020 PARK ROW
KATY, TX. 77449
PHONE: (281) 599-8288
FAX: (281) 492-0026
CERTIFIED FIRM NO. 100738000

NO.	DATE	REVISIONS	BY
3	5/7/25	ADDRESSED COMMENTS	DB
2	4/17/25	ADDED NOTE 7 AND RECORD UTILITIES	DB

DRAWN BY: DB	CHECKED BY: MDL
SCALE: 1"=30'	APPROVED BY: JDW
PROJECT NO. S425–0061C	DATE: APRIL 8, 2025

CLIENT

DATE	PROJECT NUMBER
June 10, 2025	240539

DRAWING HISTORY

No.	Description	Date

CHECKED BY: RR

DRAWN BY: KS

07 May 2025 8:53AM darrenb
G:\autoCAD\Proj\S425C061C\DWG\T050625.dwg

B:\24240539 - GPHS MPFOC\DIG\Dwgs\C 002B SURVEY.dwg Last Saved: KENDAHL.SMITH
Thursday, June 5, 2025 11:43:47 AM

PBK
www.pbk.com
TX FIRM: BR 1608
HOUSTON, TX
713-965-0008

PKG 3A - GPHS NEW FIELDHOUSE

1000 Keene St.
Galena Park, TX 77547

CLIENT PROJECT NO: 240539

ISSUE FOR PROPOSAL

SURVEY (FOR INFORMATION ONLY)

C 002B

DETAILS

DETAIL 16
"BB" INLET
TC=23.51
FL 24" RCP (E) 18.31

DETAIL 17
STM. SWR. MH.
TR=23.05
FL 48" RCP (S) 14.29
FL 24" RCP (W) 17.43
FL 48" RCP (N) 14.46
FL 24" RCP (E) 17.25

DETAIL 18
"BB" INLET
TC=23.45
FL 24" RCP (W) 18.55

DETAIL 19
STM. SWR. MH.
TR=23.58
FL 48" RCP (E) 14.31
FL 48" RCP (N) 14.35

DETAIL 20
STM. SWR. MH.
TR=22.90
FL 12" RCP (S) 17.54
FL 48" RCP (W) 14.18
FL 24" RCP (N) 17.41
FL 5'X4' CBC (E) 14.00

DETAIL 21
"C" INLET
TR=23.85
FL 5'X4' CBC (W) 19.49

DETAIL 22
STM. SWR. MH.
TR=23.58
FL 48" RCP (W) 16.44
FL 48" RCP (N) 15.61

DETAIL 23
STM. SWR. MH.
TR=23.01
FL 24" RCP (W) 17.61
FL 24" RCP (N) 17.50
FL 48" RCP (E) 16.52
FL 24" RCP (S) 17.47

DETAIL 24
"BB" INLET
TC=23.31
FL 24" RCP (N) 18.29

DETAIL 25
SAN. SWR. MH.
TR=23.36
FL 15" PVC (N) 13.44
FL 12" PVC (W) 13.57

DETAIL 26
GRATE INLET
TG=24.11
FL 12" HDP (S) 21.73
FL 12" HDP (N) 21.66

DETAIL 27
GRATE INLET
TG=24.00
FL 12" HDP (S) 21.22
FL 18" HDP (N) 16.81
(BOTTOM SILTED)

DETAIL 28
GRATE INLET
TG=24.41
FL 18" HDP (S) 15.09
FL 18" HDP (N) 18.07

DETAIL 29
GRATE INLET
TG=24.50
FL 18" HDP (S) 18.09
FL 18" HDP (NW) 18.12

DETAIL 30
GRATE INLET
TG=24.29
FL 18" HDP (SE) 18.67
FL 18" HDP (NW) 18.66

DETAIL 31
GRATE INLET
TG=24.77
FL 18" HDP (NE) 18.58
FL 18" HDP (SE) 18.60

DETAIL 32
GRATE INLET
TG=24.78
FL 18" HDP (NW) 18.37
FL 12" PVC (E) 20.60
FL 18" HDP (S) 17.88

DETAIL 33
GRATE INLET
TG=24.39
FL 18" HDP (N) 17.72
FL 12" HDP (E) 21.10
FL 18" HDP (S) 14.69

DETAIL 34
GRATE INLET
TG=24.09
FL 18" HDP (N) 15.24
FL 18" HDP (SE) 20.07
FL 12" HDP (S) 19.89

DETAIL 35
GRATE INLET
TG=24.08
FL 12" HDP (N) 20.80
FL 12" HDP (S) 21.07

DETAIL 36
GRATE INLET
TG=23.28
FL 12" HDP (S) 20.34
FL 18" HDP (NW) 20.22
FL 12" HDP (N) 20.33

DETAIL 37
GRATE INLET
TG=23.62
FL 12" HDP (S) 20.70
FL 12" HDP (N) 20.93
FL 12" HDP (E) 20.75

DETAIL 38
GRATE INLET
TG=23.40
FL 12" HDP (W) 20.96
FL 12" HDP (E) 20.83

DETAIL 39
GRATE INLET
TG=23.42
FL 12" HDP (W) 20.91
FL 12" HDP (N) 21.20
FL 12" HDP (E) 21.02

DETAIL 40
GRATE INLET
TG=24.82
FL 3" PVC (W) 22.53
FL 3" PVC (N) 22.57
FL 12" HDP (E) 22.06

DETAIL 41
GRATE INLET
TG=24.80
FL 12" HDP (W) 21.98
FL 3" PVC (E) 22.90
FL 12" HDP (S) 21.95

DETAIL 42
GRATE INLET
TG=24.87
FL 12" HDP (W) 21.86
FL 12" HDP (E) 21.97

DETAIL 43
GRATE INLET
TG=24.81
FL 12" HDP (W) 21.74
FL 12" HDP (E) 21.90

DETAIL 44
SAN. SWR. MH.
TR=25.16
FL 8" PVC (S) 12.89
FL 8" PVC (N) 18.20
FL 6" PVC (E) 21.54
FL 8" PVC (E) 13.18

DETAIL 45
SAN. SWR. MH.
TR=24.47
FL 15" PVC (NE) 12.67
FL 15" PVC (W) 12.52
FL 8" PVC (N) 12.50

DETAIL 46
SWR. MH.
TR=25.50
MEASURE TO
BOTTOM=13.92
(PIPES RECESSED &
NOT VISIBLE)

DETAIL 47
STM. SWR. MH.
TR=26.48
FL 18" HDP (NE) 19.42
FL 36" RCP (E) 18.82
FL 36" RCP (W) 18.71

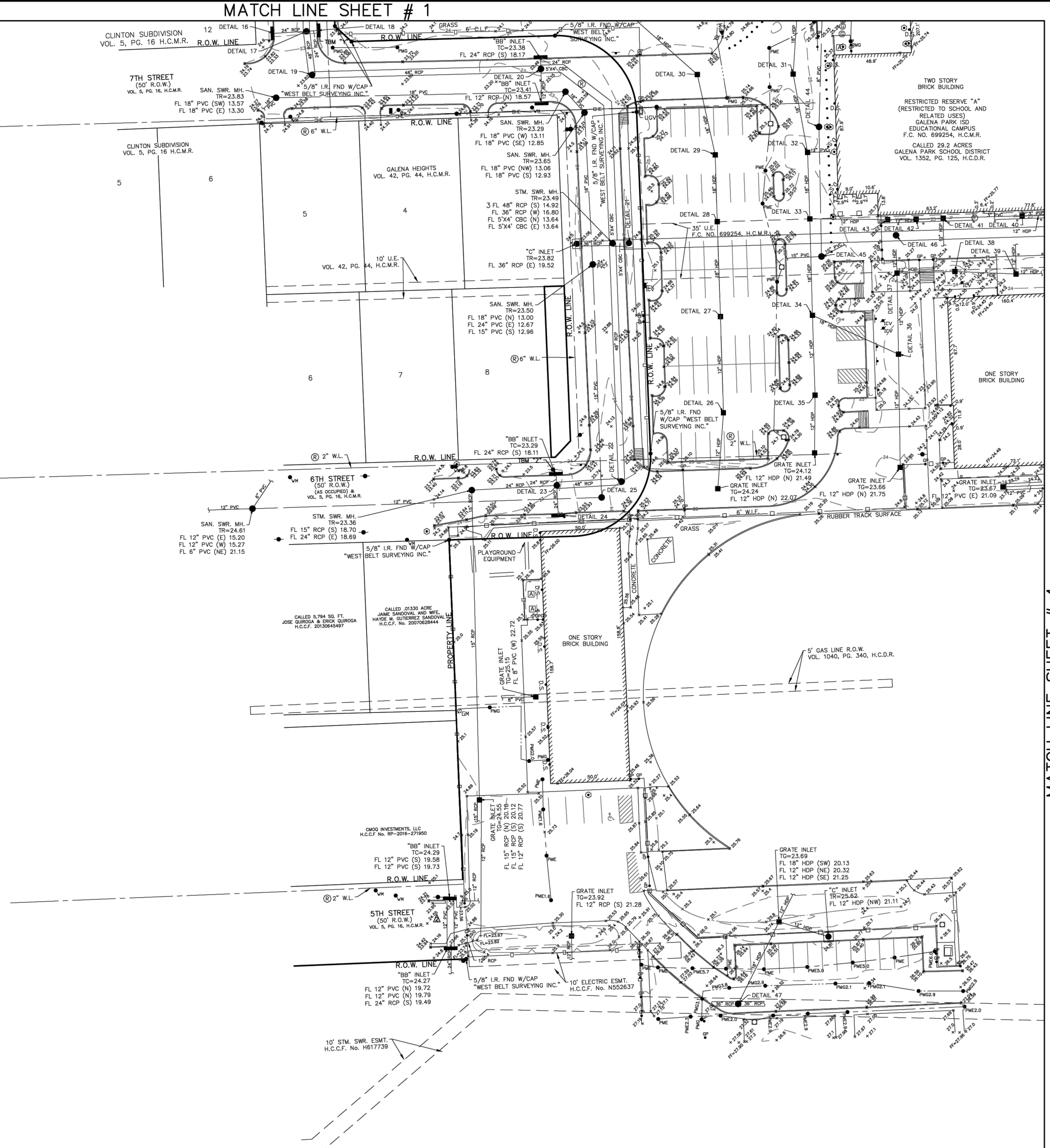

MATCH LINE SHEET # 4

VICINITY MAP

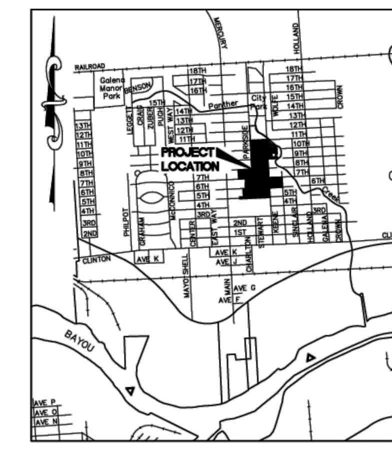

KEY MAP 496W
SCALE 1" = 3000'

SCALE: 1"= 30'

LEGEND

- AIR CONDITIONING UNIT
- "B" INLET
- "BB" INLET
- BENCHMARK
- BOLLARD
- "C" INLET
- CLEANOUT
- DOWN SPOUT
- ELECTRIC JUNCTION BOX
- FIRE HYDRANT
- GAS METER
- GAS VALVE
- GATE POST
- GRATE TOP MANHOLE
- GREASE TRAP
- GUY WIRE
- HOSE BIB
- INLET
- IRRIGATION CONTROL VALVE
- LIGHT STANDARD
- MAILBOX
- MANHOLE
- PAINT MARKER (COMMUNICATIONS)
- PAINT MARKER (ELECTRIC)
- PAINT MARKER (GAS)
- PEDESTAL
- PIPELINE MARKER
- POWER POLE
- SAMPLE WELL
- SIGN
- STAND PIPE
- TRASH CAN
- WATER METER
- WATER VALVE

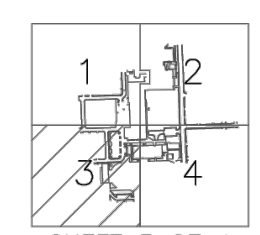

SHEET 3 OF 4

TO: GALENA PARK INDEPENDENT SCHOOL DISTRICT

THIS SURVEY SUBSTANTIALLY COMPLIES WITH THE CURRENT TEXAS SOCIETY OF PROFESSIONAL SURVEYORS MANUAL OF PRACTICE REQUIREMENTS FOR A CATEGORY 6, CONDITION 1 SURVEY AND THE CURRENT MINIMUM REQUIREMENTS OF THE PROFESSIONAL LAND SURVEYING ACT.

STATE OF TEXAS REGISTERED JOEL D. WALKER 5189 PROFESSIONAL LAND SURVEYOR

5/7/25
DATE

JOEL D. WALKER, R.P.L.S.
TEXAS REGISTRATION NO. 5189

SURVEYOR'S NOTES:

1. THE BEARINGS SHOWN HEREON ARE BASED ON THE TEXAS COORDINATE SYSTEM, SOUTH CENTRAL ZONE, NAD 83.

2. ACCORDING TO F.I.R.M. MAP NO. 48201C0905M (COMMUNITY-PANEL NO. 4802930905M), MAP REVISED DATE: JANUARY 6, 2017. THE SUBJECT PROPERTY LIES WITHIN THE AREA DESIGNATED AS ZONE "X" UNSHADED. AREAS DETERMINED TO BE OUTSIDE THE 0.2% ANNUAL CHANCE FLOODPLAIN AND ZONE "X" SHADED. AREAS OF 0.2% ANNUAL CHANCE FLOOD; AREAS OF 1% ANNUAL CHANCE FLOOD WITH AVERAGE DEPTHS OF LESS THAN 1 FOOT OR WITH DRAINAGE AREAS LESS THAN 1 SQUARE MILE; AND AREAS PROTECTED BY LEVEES FROM 1% ANNUAL CHANCE FLOOD.

THIS STATEMENT IS BASED ON SCALING THE LOCATION OF THE SUBJECT TRACT ON THE ABOVE REFERENCED MAP. THIS INFORMATION IS TO DETERMINE FLOOD INSURANCE RATES ONLY AND IS NOT INTENDED TO IDENTIFY SPECIFIC FLOODING CONDITIONS.

3. ALL UTILITIES SHOWN HEREON ARE LOCATED USING "APPARENT & VISIBLE" EVIDENCE BY ON-SITE OBSERVATION UNLESS OTHERWISE NOTED.

4. ⟶ INDICATES AN UNDERGROUND SEWER LINE WITH UNKNOWN DIRECTION, SIZE OR LOCATION OR A POSSIBLE STUB-OUT.

5. UNDERGROUND UTILITY LOCATIONS PROVIDED BY LONESTAR LOCATING, LLC. PAINT MARKS WITH NUMERIC VALUES INDICATES COVER (FEET AND INCHES) DETERMINED BY ELECTRONIC TONING.

ALWAYS CONTACT TEXAS 811 PRIOR TO DIGGING. SOME UTILITIES SUCH AS FIBER OPTIC W/O TRACERS, PLASTIC GAS, FIBERGLASS/PVC ARE NOT LOCATABLE BY TRANSMISSION SIGNAL.

6. SUBJECT TRACT IS AFFECTED BY GALENA PARK CODE OF ORDINANCES AND IS ZONED AS "DISTRICT C".

7. Ⓡ INDICATES RECORD UTILITIES PLOTTED FROM MAPS PREPARED BY BROOKS & SPARKS, INC. PROJECT NO. 725-0147, DATED JANUARY 2022.

REFERENCE BENCHMARK:

RM070475 – BRASS DISK STAMPED "PAN CR 5 1968" LOCATED ON THE NORTHWEST CORNER OF BRIDGE ON CLINTON DRIVE OVER PANTHER CREEK IN KEY MAP 496X IN THE SAN JACINTO RIVER WATERSHED NEAR STREAM 112-00-00. ELEVATION=11.58' (NAVD 88, 2001 ADJ.)

TEMPORARY BENCHMARKS:

TBM "Y" – BOX CUT ON "BB" INLET LOCATED ON THE NORTH SIDE OF 7TH STREET AND EAST SIDE OF PARKSIDE DRIVE. ELEVATION=23.48'

TBM "Z" – BOX CUT ON "BB" INLET LOCATED ON THE NORTH SIDE OF 6TH STREET AND WEST SIDE OF PARKSIDE DRIVE. ELEVATION=23.29'

ABBREVIATIONS

C.L.F.–CHAIN LINK FENCE
CBC–CONCRETE BOX CULVERT
CMC–CREPE MYRTLE CLUSTER
CMP–CORRUGATED METAL PIPE
CONC.–CONCRETE
ESMT.–EASEMENT
FC–FILM CODE
FDC–FIRE DEPARTMENT CONNECT
FF–FINISH FLOOR
FL–FLOW LINE
FND.–FOUND
H.C.C.F.–HARRIS COUNTY CLERK'S FILE
H.C.M.R.–HARRIS COUNTY MAP RECORDS
HDP–HIGH DENSITY POLYETHYLENE PIPE
I.P.–IRON PIPE
I.R.–IRON ROD
MH–MANHOLE
OHE–OVERHEAD ELECTRIC
PG.–PAGE
PVC–POLYVINYL CHLORIDE PIPE
RCP–REINFORCED CONCRETE PIPE
R.O.W.–RIGHT-OF-WAY
SAN.–SANITARY
STM.–STORM
SWR.–SEWER
TRF–PAD MOUNTED TRANSFORMER
TG–TOP OF GRATE
TR–TOP OF RIM
TYP.–TYPICAL
U.E.–UTILITY EASEMENT
UGV–UNDERGROUND VAULT
VOL.–VOLUME
W.I.F.–WROUGHT IRON FENCE
W.L.E.–WATER LINE EASEMENT
W.F.–WOOD FENCE

GALENA PARK
INDEPENDENT
SCHOOL DISTRICT

TOPOGRAPHIC SURVEY

GALENA PARK
HIGH SCHOOL
OUT OF THE
EZEKIEL THOMAS SURVEY
ABSTRACT NO. 73
CITY OF GALENA PARK,
HARRIS COUNTY, TEXAS

WEST BELT SURVEYING, INC.
21020 PARK ROW
KATY, TX. 77449
PHONE: (281) 599-8288
FAX: (281) 492-6026
CERTIFIED FIRM NO. 10073800

NO.	DATE	REVISIONS	BY
2	5/7/25	ADDRESSED COMMENTS	DB
1	4/17/25	ADDED NOTE 7 AND RECORD UTILITIES	DB

DRAWN BY: DB	CHECKED BY: MDL
SCALE: 1"=30'	APPROVED BY: JDW
PROJECT NO. S425-0061C	DATE: APRIL 8, 2025

07 May 2025 8:53AM darrenb
G:\sdsk\proj\S4250061C\DWG\T050625.dwg

B:\24\240539 - GPHS MP\FOC\DIG\Dwgs\C 002C SURVEY.dwg Last Saved: KENDAHL.SMITH
Thursday, June 5, 2025 11:44:03 AM

PBK

www.pbk.com
TX FIRM: BR 1608
HOUSTON, TX
713-965-0608

PKG 3A - GPHS NEW FIELDHOUSE

1000 Keene St,
Galena Park, TX 77547

CLIENT PROJECT NO: 240539
ISSUE FOR PROPOSAL

Galena Park ISD — EXCELLENCE IN ALL, FOR ALL, BY ALL

CLIENT	
DATE June 10, 2025	PROJECT NUMBER 240539

DRAWING HISTORY

No.	Description	Date

CHECKED BY: RR
DRAWN BY: KS

SURVEY (FOR INFORMATION ONLY)

C 002C

MATCH LINE SHEET # 2

MATCH LINE SHEET # 3

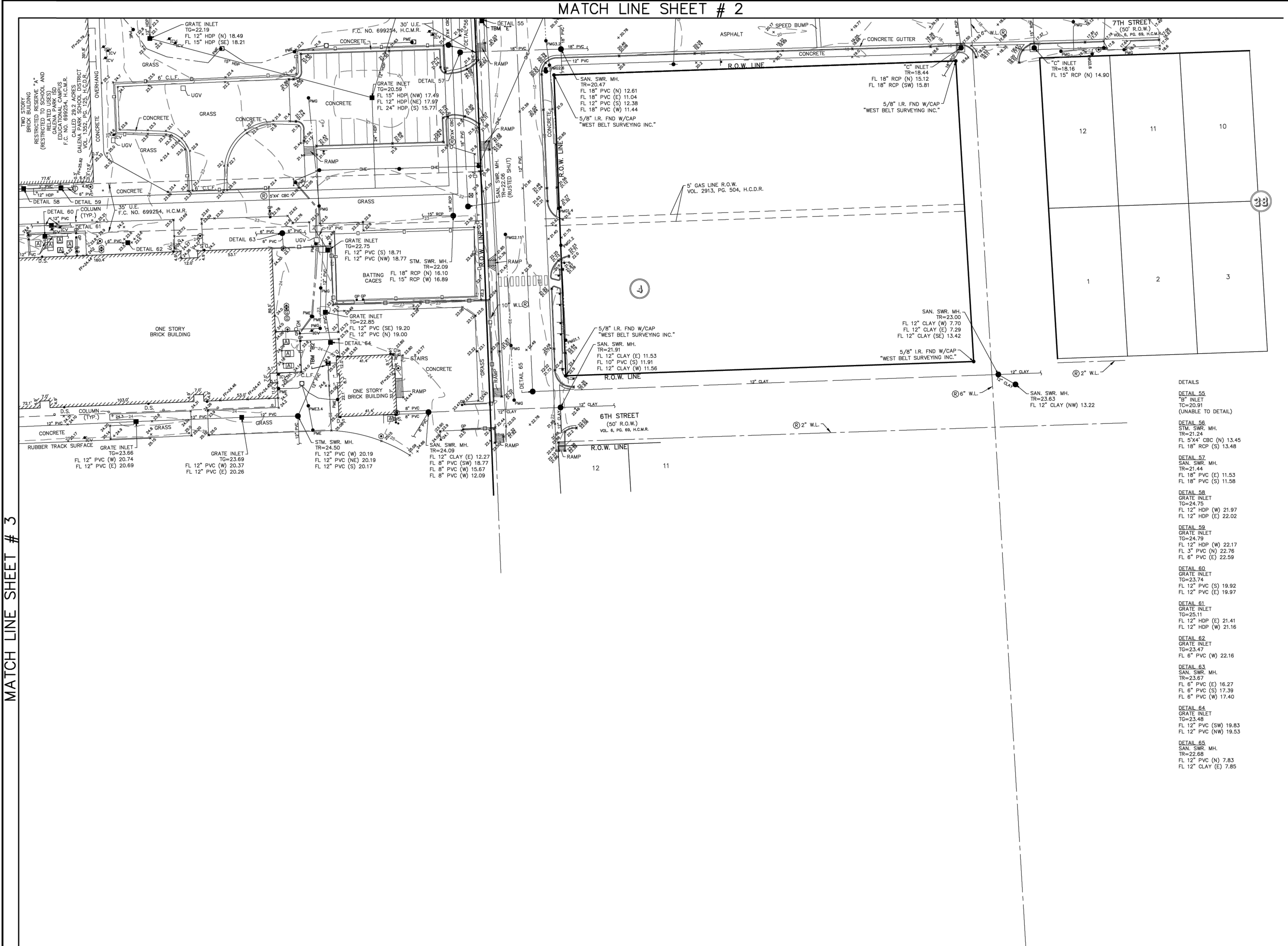

DETAILS

DETAIL 55
"B" INLET
TC=20.91
(UNABLE TO DETAIL)

DETAIL 56
STM. SWR. MH.
TR=21.24
FL 5'X4' CBC (N) 13.45
FL 18" RCP (S) 13.48

DETAIL 57
SAN. SWR. MH.
TR=21.44
FL 18" PVC (E) 11.53
FL 18" PVC (S) 11.58

DETAIL 58
GRATE INLET
TG=24.75
FL 12" HDP (W) 21.97
FL 12" HDP (E) 22.02

DETAIL 59
GRATE INLET
TG=24.79
FL 12" HDP (W) 22.17
FL 3" PVC (N) 22.76
FL 6" PVC (E) 22.59

DETAIL 60
GRATE INLET
TG=23.74
FL 12" PVC (S) 19.92
FL 12" PVC (E) 19.97

DETAIL 61
GRATE INLET
TG=25.11
FL 12" HDP (E) 21.41
FL 12" HDP (W) 21.16

DETAIL 62
GRATE INLET
TG=23.47
FL 6" PVC (W) 22.16

DETAIL 63
SAN. SWR. MH.
TR=23.67
FL 6" PVC (E) 16.27
FL 6" PVC (S) 17.39
FL 6" PVC (W) 17.40

DETAIL 64
GRATE INLET
TG=23.48
FL 12" PVC (SW) 19.83
FL 12" PVC (NW) 19.53

DETAIL 65
SAN. SWR. MH.
TR=22.68
FL 12" PVC (N) 7.83
FL 12" CLAY (E) 7.85

VICINITY MAP

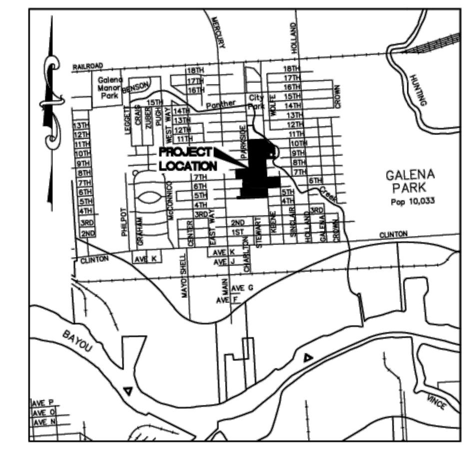

KEY MAP 496W
SCALE 1" = 3000'

SCALE: 1"= 30'

LEGEND

- AIR CONDITIONING UNIT
- "B" INLET
- "BB" INLET
- BENCHMARK
- BOLLARD
- "C" INLET
- CLEANOUT
- DOWN SPOUT
- ELECTRIC JUNCTION BOX
- FIRE HYDRANT
- GAS METER
- GAS VALVE
- GATE POST
- GRATE TOP MANHOLE
- GREASE TRAP
- GUY WIRE
- HOSE BIB
- INLET
- IRRIGATION CONTROL VALVE
- LIGHT STANDARD
- MAILBOX
- MANHOLE
- PAINT MARKER (COMMUNICATIONS)
- PAINT MARKER (ELECTRIC)
- PAINT MARKER (GAS)
- PEDESTAL
- PIPELINE MARKER
- POWER POLE
- SAMPLE WELL
- SIGN
- STAND PIPE
- TRASH CAN
- WATER METER
- WATER VALVE

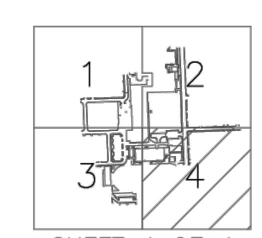

SHEET 4 OF 4

TO: GALENA PARK INDEPENDENT SCHOOL DISTRICT

THIS SURVEY SUBSTANTIALLY COMPLIES WITH THE CURRENT TEXAS SOCIETY OF PROFESSIONAL SURVEYORS MANUAL OF PRACTICE REQUIREMENTS FOR A CATEGORY 6, CONDITION 1 SURVEY AND THE CURRENT MINIMUM REQUIREMENTS OF THE PROFESSIONAL LAND SURVEYING ACT.

STATE OF TEXAS REGISTERED JOEL D. WALKER 5189 PROFESSIONAL LAND SURVEYOR

5/7/25
DATE

JOEL D. WALKER, R.P.L.S.
TEXAS REGISTRATION NO. 5189

SURVEYOR'S NOTES:

1. THE BEARINGS SHOWN HEREON ARE BASED ON THE TEXAS COORDINATE SYSTEM, SOUTH CENTRAL ZONE, NAD 83.

2. ACCORDING TO F.I.R.M. MAP NO. 48201C0905M (COMMUNITY-PANEL NO. 4802930905M), MAP REVISED DATE: JANUARY 6, 2017. THE SUBJECT PROPERTY LIES WITHIN THE AREA DESIGNATED AS ZONE "X" UNSHADED. AREAS DETERMINED TO BE OUTSIDE THE 0.2% ANNUAL CHANCE FLOODPLAIN AND ZONE "X" SHADED. AREAS OF 0.2% ANNUAL CHANCE FLOOD; AREAS OF 1% ANNUAL CHANCE FLOOD WITH AVERAGE DEPTHS OF LESS THAN 1 FOOT OR WITH DRAINAGE AREAS LESS THAN 1 SQUARE MILE; AND AREAS PROTECTED BY LEVEES FROM 1% ANNUAL CHANCE FLOOD.

THIS STATEMENT IS BASED ON SCALING THE LOCATION OF THE SUBJECT TRACT ON THE ABOVE REFERENCED MAP. THIS INFORMATION IS TO DETERMINE FLOOD INSURANCE RATES ONLY AND IS NOT INTENDED TO IDENTIFY SPECIFIC FLOODING CONDITIONS.

3. ALL UTILITIES SHOWN HEREON ARE LOCATED USING "APPARENT & VISIBLE" EVIDENCE BY ON-SITE OBSERVATION UNLESS OTHERWISE NOTED.

4. ⤳ INDICATES AN UNDERGROUND SEWER LINE WITH UNKNOWN DIRECTION, SIZE OR LOCATION OR A POSSIBLE STUB-OUT.

5. UNDERGROUND UTILITY LOCATIONS PROVIDED BY LONESTAR LOCATING, LLC. PAINT MARKS WITH NUMERIC VALUES INDICATES COVER (FEET AND INCHES) DETERMINED BY ELECTRONIC TONING.

ALWAYS CONTACT TEXAS 811 PRIOR TO DIGGING. SOME UTILITIES SUCH AS FIBER OPTIC W/O TRACERS, PLASTIC GAS, FIBERGLASS/PVC ARE NOT LOCATABLE BY TRANSMISSION SIGNAL.

6. SUBJECT TRACT IS AFFECTED BY GALENA PARK CODE OF ORDINANCES AND IS ZONED AS "DISTRICT C".

7. Ⓡ INDICATES RECORD UTILITIES PLOTTED FROM MAPS PREPARED BY BROOKS & SPARKS, INC. PROJECT NO. 725-0147, DATED JANUARY 2022.

REFERENCE BENCHMARK:

RM070475 – BRASS DISK STAMPED "PAN CR 5 1968" LOCATED ON THE NORTHWEST CORNER OF BRIDGE ON CLINTON DRIVE OVER PANTHER CREEK IN KEY MAP 496X IN THE SAN JACINTO RIVER WATERSHED NEAR STREAM 112-00-00. ELEVATION=11.58' (NAVD 88, 2001 ADJ.)

TEMPORARY BENCHMARKS:

TBM "E" – BOX CUT ON THE NORTHWEST CORNER OF "C" INLET LOCATED AT THE NORTHWEST CORNER OF KEENE STREET AND 7TH STREET.
ELEVATION=20.94'

TBM "B2" – BOX CUT ON CONCRETE LOCATED ±7' SOUTHWEST FROM THE NORTHWEST CORNER OF THE CONCESSION STAND.
ELEVATION=25.07'

ABBREVIATIONS

C.L.F.–CHAIN LINK FENCE
CBC–CONCRETE BOX CULVERT
CMC–CREPE MYRTLE CLUSTER
CMP–CORRUGATED METAL PIPE
CONC.–CONCRETE
ESMT.–EASEMENT
FC–FILM CODE
FDC–FIRE DEPARTMENT CONNECT
FF–FINISH FLOOR
FL–FLOW LINE
FND.–FOUND
H.C.C.F.–HARRIS COUNTY CLERK'S FILE
H.C.M.R.–HARRIS COUNTY MAP RECORDS
HDP–HIGH DENSITY POLYETHYLENE PIPE
I.P.–IRON PIPE
I.R.–IRON ROD
MH–MANHOLE
OHE–OVERHEAD ELECTRIC
PG.–PAGE
PVC–POLYVINYL CHLORIDE PIPE
RCP–REINFORCED CONCRETE PIPE
R.O.W.–RIGHT-OF-WAY
SAN.–SANITARY
STM.–STORM
SWR.–SEWER
TRF–PAD MOUNTED TRANSFORMER
TG–TOP OF GRATE
TR–TOP OF RIM
TYP.–TYPICAL
U.E.–UTILITY EASEMENT
UGV–UNDERGROUND VAULT
VOL.–VOLUME
W.I.F.–WROUGHT IRON FENCE
W.L.E.–WATER LINE EASEMENT
W.F.–WOOD FENCE

GALENA PARK INDEPENDENT SCHOOL DISTRICT

TOPOGRAPHIC SURVEY

GALENA PARK HIGH SCHOOL OUT OF THE EZEKIEL THOMAS SURVEY ABSTRACT NO. 73 CITY OF GALENA PARK, HARRIS COUNTY, TEXAS

WEST BELT SURVEYING, INC.
21020 PARK ROW
KATY, TX. 77449
PHONE: (281) 599-8288
FAX: (281) 492-6026
CERTIFIED FIRM NO. 10073800

NO.	DATE	REVISIONS	BY
2	5/7/25	ADDRESSED COMMENTS	DB
1	4/17/25	ADDED NOTE 7 AND RECORD UTILITIES	DB

DRAWN BY: DB	CHECKED BY: MDL
SCALE: 1"=30'	APPROVED BY: JDW
PROJECT NO. S425-0061C	DATE: APRIL 8, 2025

07 May 2025 8:53AM darrenb
G:\sdsk\proj\S4250061C\DWG\T050625.dwg

B:\24\240539 - GPHS MP\FOC\DIG\Dwgs\C 002D SURVEY.dwg Last Saved: KENDAHL.SMITH
Thursday, June 5, 2025 11:44:27 AM

PBK
www.pbk.com
TX FIRM: BR 1608
HOUSTON, TX
713-965-0608

PKG 3A - GPHS NEW FIELDHOUSE

1000 Keene St,
Galena Park, TX 77547

CLIENT PROJECT NO: 240539

ISSUE FOR PROPOSAL

Galena Park ISD — EXCELLENCE IN ALL, FOR ALL, BY ALL

CLIENT	
DATE June 10, 2025	PROJECT NUMBER 240539

DRAWING HISTORY

No.	Description	Date

CHECKED BY: RR
DRAWN BY: KS

SURVEY (FOR INFORMATION ONLY)

C 002D

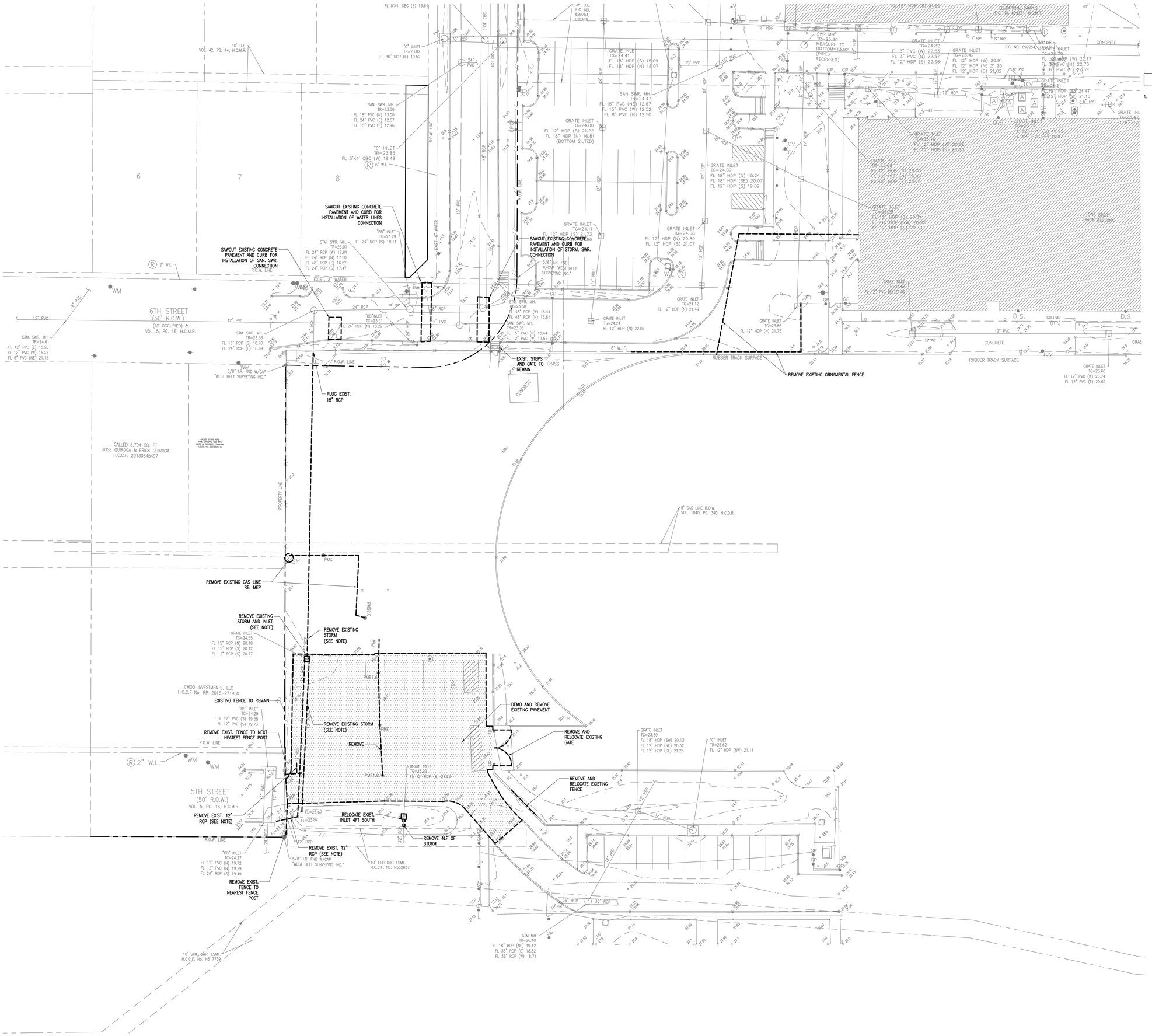

PBK

www.pbk.com
TX FIRM: BR 1608
HOUSTON, TX
713-965-0608

PKG 3A - GPHS NEW FIELDHOUSE

1000 Keene St.
Galena Park, TX 77547

CLIENT PROJECT NO: 240539

ISSUE FOR PROPOSAL

Galena Park ISD

RAJEEB K. RAJBHANDARI
116968
LICENSED
PROFESSIONAL ENGINEER
06/10/2025
JDG ENGINEERS
F-18326

CLIENT	
DATE June 10, 2025	PROJECT NUMBER 240539

DRAWING HISTORY

No.	Description	Date

CHECKED BY: RR

DRAWN BY: KS

DEMOLITION PLAN

C 003

B:\240240539 - GPHS MP\FOC\DIG\Dwgs\C.003 DEMOLITION PLAN.dwg Last Saved: AGUIZMAN
Friday, June 6, 2025 11:43:01 AM

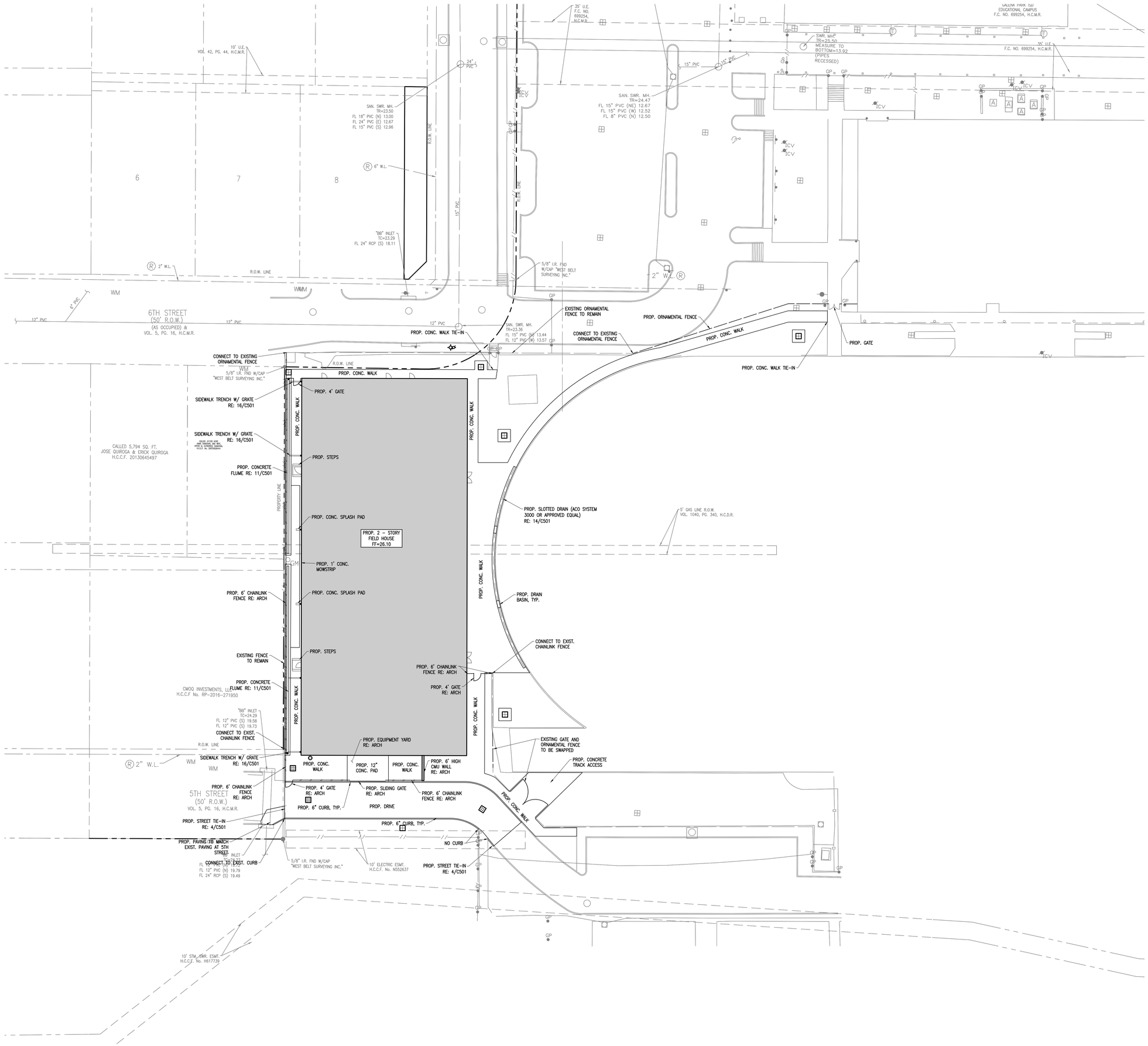

B:\240539 - GPHS MP\FOCD\G\Dwgs\C 101 SITE PLAN.dwg Last Saved: KENDAHL.SMITH
Friday, June 6, 2025 11:03:28 AM

PBK

www.pbk.com
TX FIRM: BR 1608
HOUSTON, TX
713-965-0008

PKG 3A - GPHS NEW FIELDHOUSE

1000 Keene St.
Galena Park, TX 77547

CLIENT PROJECT NO: 240539

ISSUE FOR PROPOSAL

STATE OF TEXAS
RAJEEB K. RAJBHANDARI
116968
LICENSED
PROFESSIONAL ENGINEER
06/10/2025
DGE ENGINEERS
F-18326

CLIENT	
DATE June 10, 2025	PROJECT NUMBER 240539

DRAWING HISTORY

No.	Description	Date

CHECKED BY: RR

DRAWN BY: KS

SITE PLAN

C 101

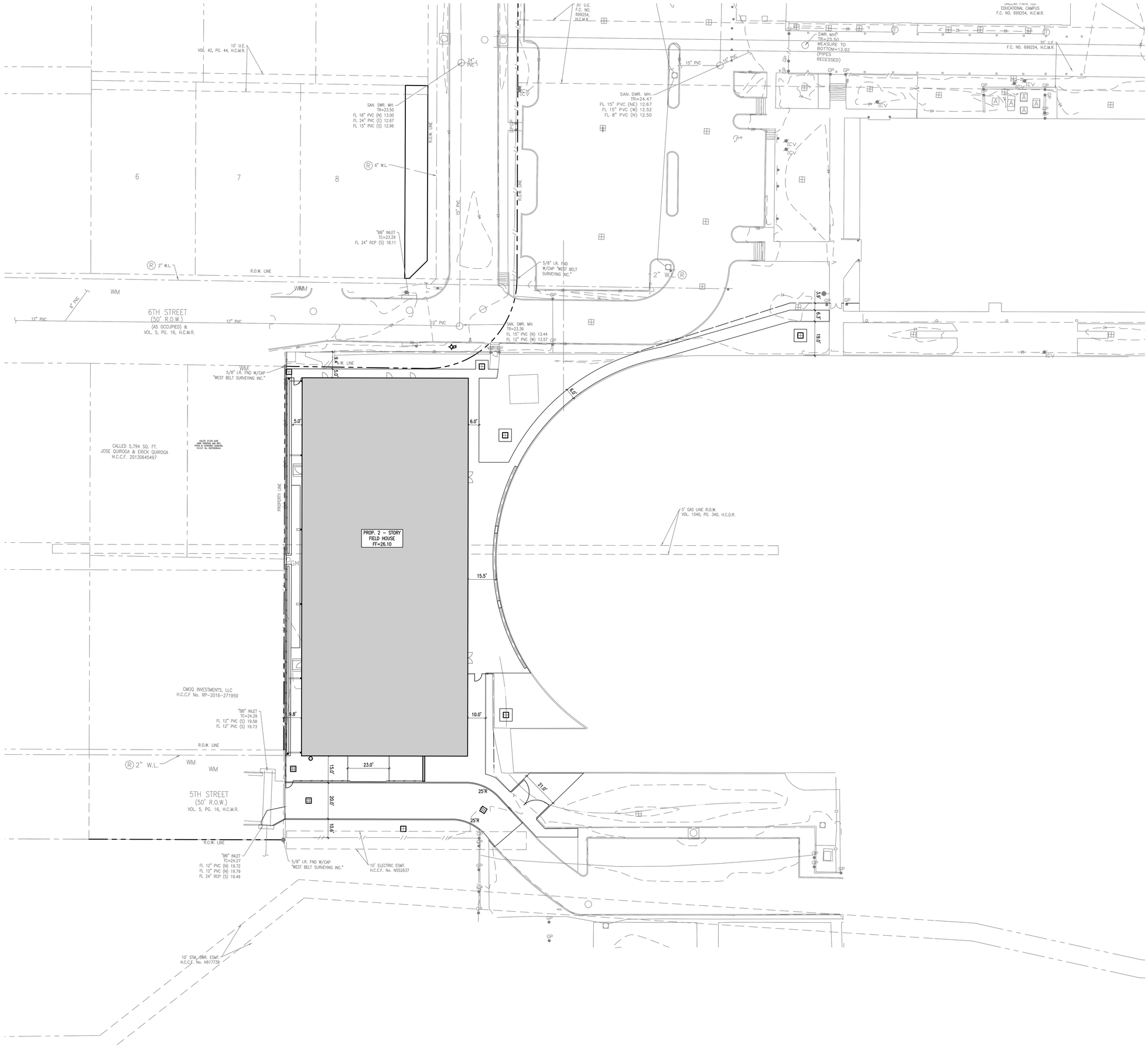

B:\240\40539 - GPHS MPFOC\DIG\Dwgs\DIMENSIONAL CONTROL PLAN.dwg Last Saved: KENDAHL.SMITH

Thursday, May 22, 2025 3:36:58 PM

PBK

www.pbk.com

TX FIRM: BR 1608

HOUSTON, TX
713-965-0608

PKG 3A - GPHS NEW FIELDHOUSE

1000 Keene St.
Galena Park, TX 77547

CLIENT PROJECT NO: 240539

ISSUE FOR PROPOSAL

Galena Park ISD
EXCELLENCE IN ALL, FOR ALL, OF ALL

STATE OF TEXAS
RAJEEB K. RAJBHANDARI
116968
LICENSED
PROFESSIONAL ENGINEER

06/10/2025

DKG ENGINEERS
F-18326

CLIENT	
DATE June 10, 2025	PROJECT NUMBER 240539

DRAWING HISTORY

No.	Description	Date

CHECKED BY: RR

DRAWN BY: KS

DIMENSIONAL
CONTROL PLAN

C 102

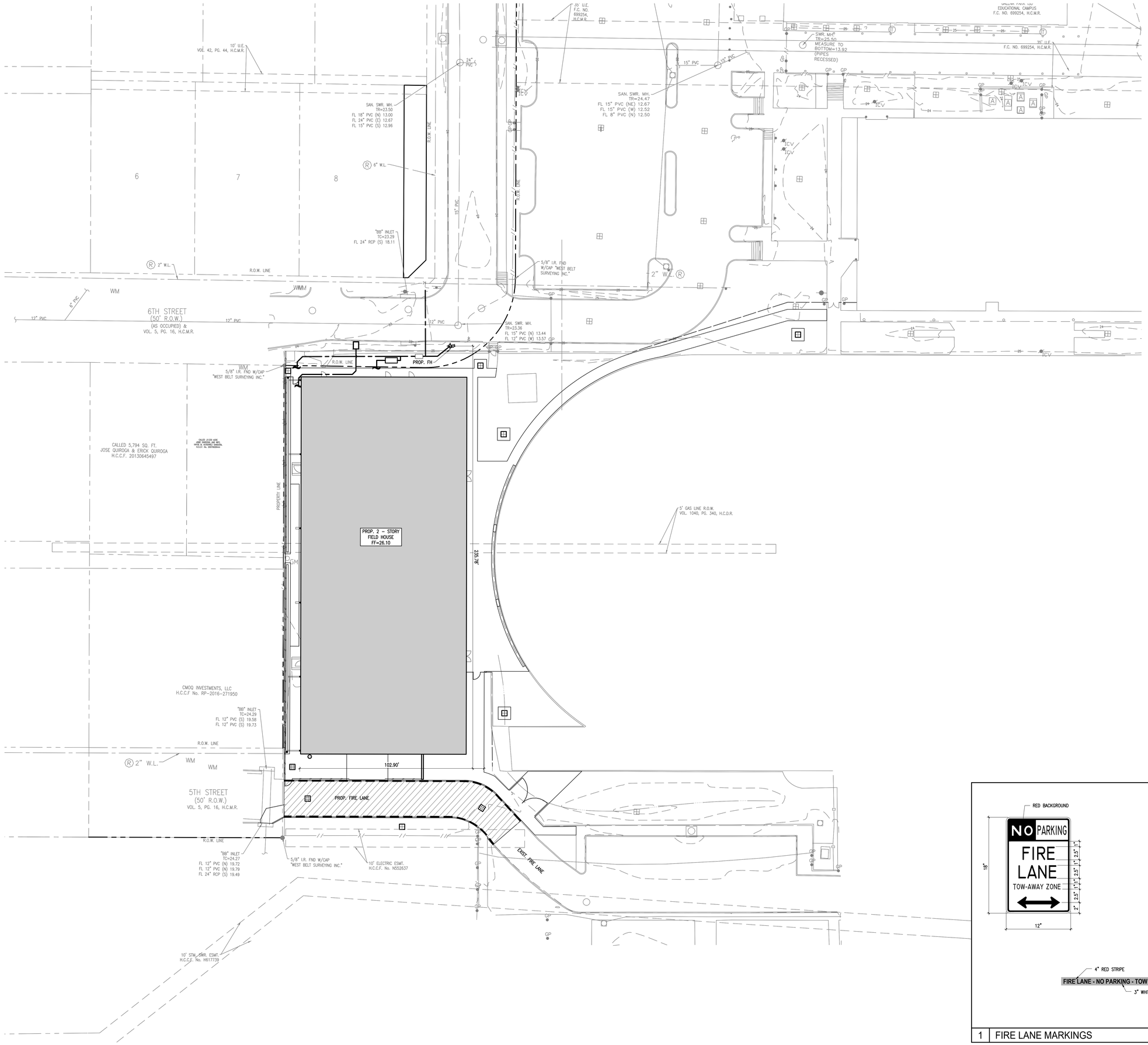

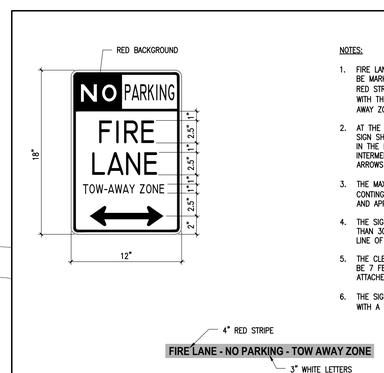

NOTES:

1. FIRE LANES/FIRE APPARATUS ACCESS ROADS SHALL BE MARKED ON THE CURBS OR PAVEMENT WITH A RED STRIPE 4" IN HEIGHT AND STENCILED EVERY 50' WITH THE WORDS "FIRE LANE – NO PARKING – TOW AWAY ZONE" IN 3" WHITE LETTERS.
2. AT THE BEGINNING AND END OF THE FIRE LANE, THE SIGN SHALL HAVE A SINGLE HEADED ARROW POINTING IN THE DIRECTION THE REGULATION IS IN EFFECT. THE INTERMEDIATE SIGNS SHALL HAVE DOUBLE HEADED ARROWS POINTING IN BOTH DIRECTIONS.
3. THE MAXIMUM SPACING OF THE SIGNS SHALL BE 75', CONTINGENT UPON TRAFFIC ENGINEERING'S REVIEW AND APPROVAL.
4. THE SIGNS SHALL BE SET AT AN ANGLE OF NOT LESS THAN 30° NOR MORE THAN 45° WITH THE CURB OR LINE OF TRAFFIC FLOW.
5. THE CLEARANCE TO THE BOTTOM OF THE SIGN SHALL BE 7 FEET. THERE SHALL BE NO OTHER SIGNS ATTACHED TO THE SIGN OR THE SIGN POLE.
6. THE SIGN PLATE SHALL BE A MINIMUM OF 12" X 18" WITH A THICKNESS OF 0.080".

1 FIRE LANE MARKINGS

PBK

www.pbk.com
TX FIRM: BR 1608
HOUSTON, TX
713-965-0608

PKG 3A - GPHS NEW FIELDHOUSE

1000 Keene St.
Galena Park, TX 77547

CLIENT PROJECT NO: 240539

ISSUE FOR PROPOSAL

Galena Park ISD

STATE OF TEXAS
RAJEEB K. RAJBHANDARI
116968
LICENSED
PROFESSIONAL ENGINEER
06/10/2025
DWG ENGINEERS
F-18326

CLIENT	
DATE June 10, 2025	PROJECT NUMBER 240539

DRAWING HISTORY

No.	Description	Date

CHECKED BY: RR

DRAWN BY: KS

FIRE APPARATUS
& SAFETY PLAN

C 103

B:\240\0539 - GPHS MPFOC\DIG\Dwgs\FIRE APPARATUS & SAFETY PLAN.dwg Last Saved: KENDAHL.SMITH
Friday, June 6, 2025 9:44:48 AM

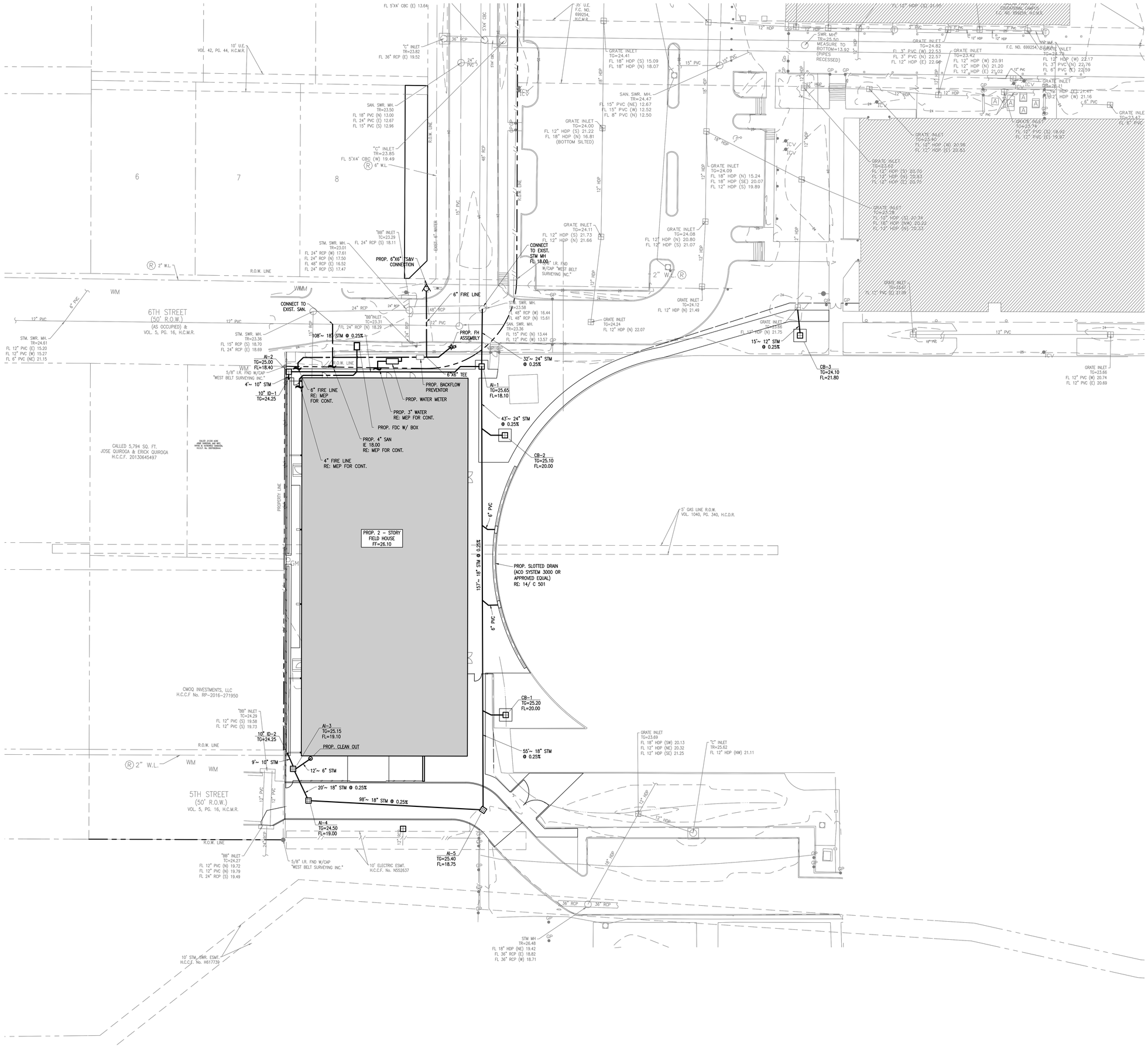

PBK

www.pbk.com
TX FIRM: BR 1608
HOUSTON, TX
713-965-0008

PKG 3A - GPHS NEW FIELDHOUSE

1000 Keene St.
Galena Park, TX 77547

CLIENT PROJECT NO: 240539

ISSUE FOR PROPOSAL

Galena Park ISD
GP
EXCELLENCE IN ALL FOR ALL PUPILS

STATE OF TEXAS
RAJEEB K. RAJBHANDARI
116968
LICENSED
PROFESSIONAL ENGINEER
06/10/2025
DGE ENGINEERS
F-18326

CLIENT	
DATE June 10, 2025	PROJECT NUMBER 240539

DRAWING HISTORY

No.	Description	Date

CHECKED BY: RR

DRAWN BY: KS

DRAINAGE AND
UTILITY PLAN

C 201

B:\241240539 - GPHS MP\FOCD\G\Dwgs\C.201 DRAINAGE AND UTILITY PLAN.dwg Last Saved: KENDAHL.SMITH
Friday, June 6, 2025 10:02:12 AM

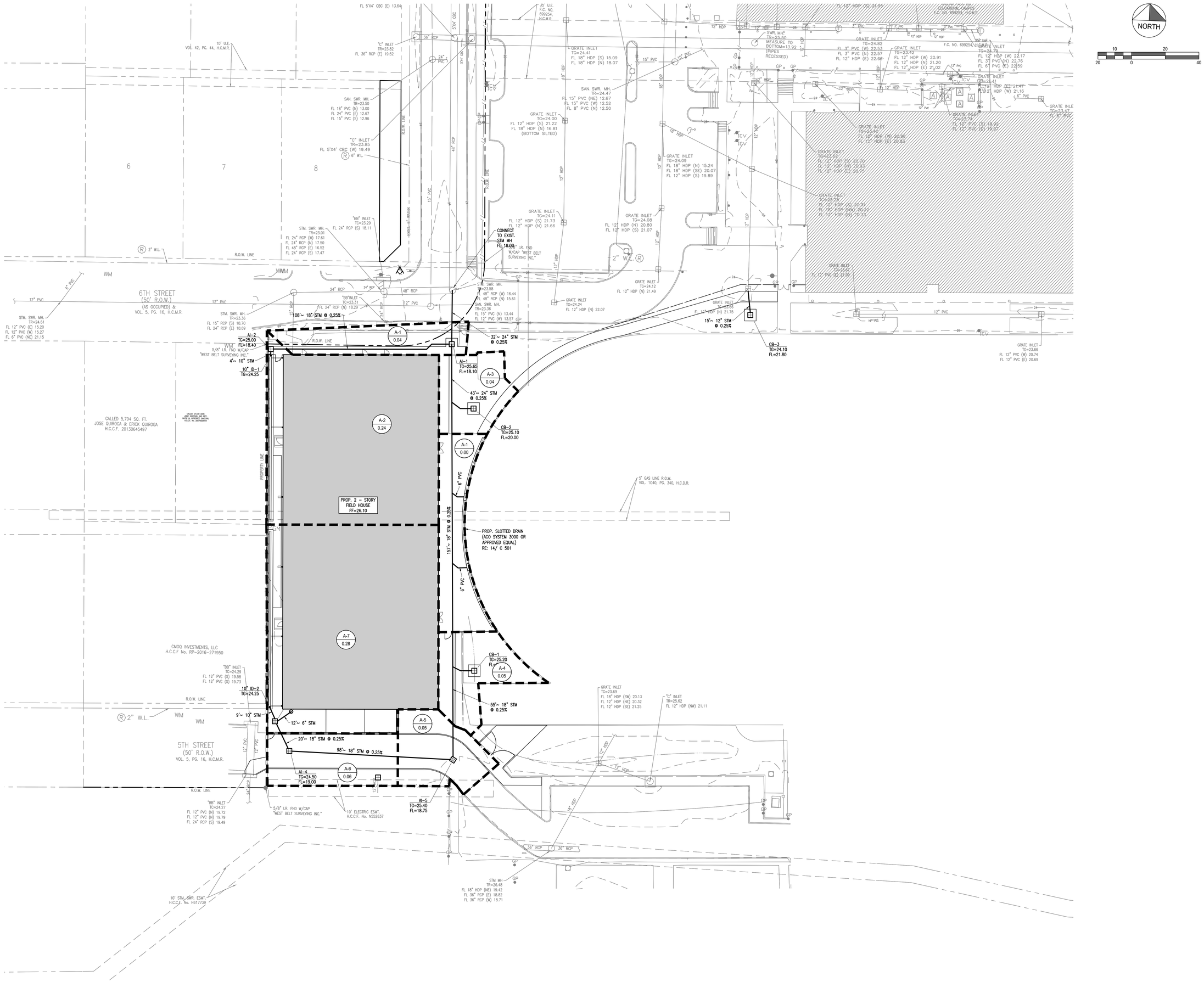

PKG 3A - GPHS NEW FIELDHOUSE

1000 Keene St.
Galena Park, TX 77547

CLIENT PROJECT NO: 240539

ISSUE FOR PROPOSAL

PBK

www.pbk.com

TX FIRM: BR 1608

HOUSTON, TX
713-965-0608

STATE OF TEXAS
RAJEEB K. RAJBHANDARI
116968
LICENSED
PROFESSIONAL ENGINEER

06/10/2025
DG ENGINEERS
F-18326

CLIENT	
DATE June 10, 2025	PROJECT NUMBER 240539

DRAWING HISTORY

No.	Description	Date

CHECKED BY: RR

DRAWN BY: KS

DRAINAGE AREA MAP

C 202

B:\24\240539 - GPHS MP\FOC\DIG\Dwgs\DRAINAGE AREA MAP.dwg Last Saved: KENDAHL.SMITH
Friday, June 6, 2025 9:49:02 AM

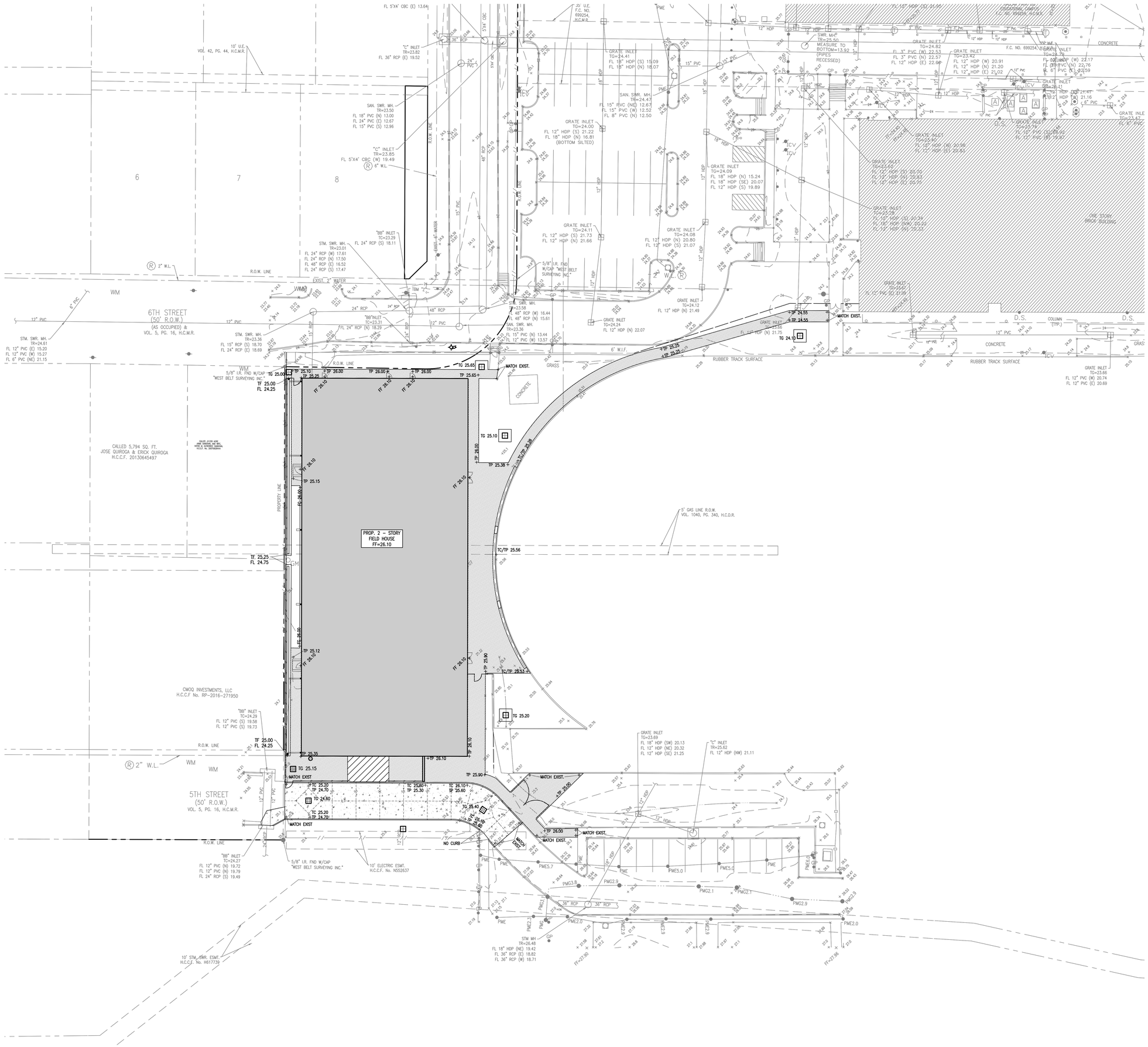

NORTH

10 0 20
20 0 40

PBK

www.pbk.com
TX FIRM: BR 1608
HOUSTON, TX
713-965-0608

PKG 3A - GPHS NEW FIELDHOUSE

1000 Keene St.
Galena Park, TX 77547

CLIENT PROJECT NO: 240539

ISSUE FOR PROPOSAL

Galena Park ISD

RAJEEB K. RAJBHANDARI
116968
LICENSED
PROFESSIONAL ENGINEER
STATE OF TEXAS

06/10/2025
DKG ENGINEERS
F-18326

CLIENT	
DATE June 10, 2025	PROJECT NUMBER 240539

DRAWING HISTORY

No.	Description	Date

CHECKED BY: RR

DRAWN BY: KS

GRADING &
PAVING PLAN

C 301

B:\240240539 - GPHS MP\FOC\DIG\Dwgs\C-301 GRADING PLAN.dwg Last Saved: KENDAHL.SMITH
Thursday, June 5, 2025 11:20:22 AM

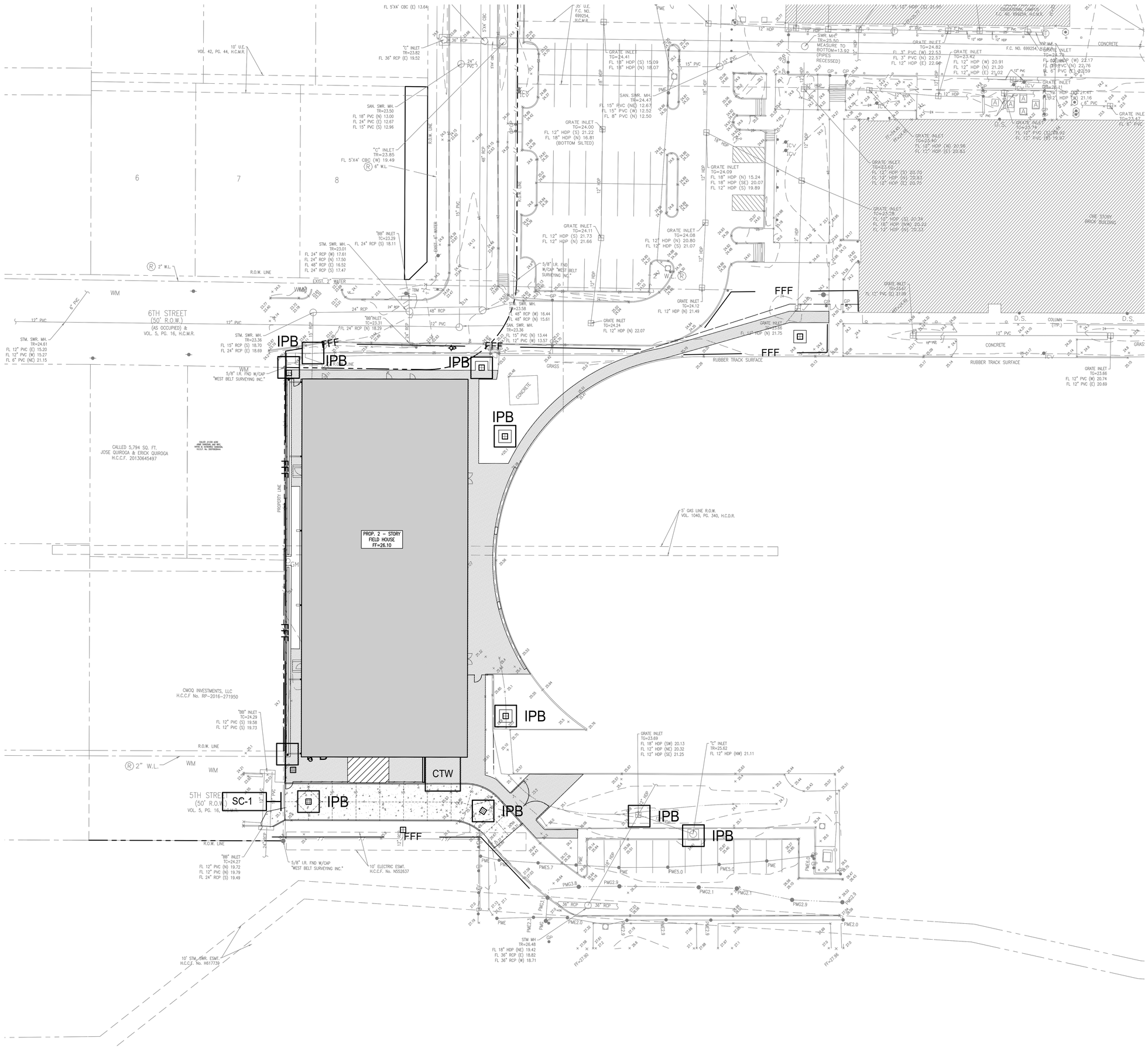

NORTH

10 20
20 0 40

LEGEND

IPB	INLET PROTECTION BARRIER
FFF	FILTER FABRIC FENCE
CTW	CONCRETE WASH OUT
SC-1	STABILIZED CONSTRUCTION ENTRANCE

PBK

www.pbk.com
TX FIRM: BR 1608
HOUSTON, TX
713-965-0608

PKG 3A - GPHS NEW FIELDHOUSE

1000 Keene St.
Galena Park, TX 77547

CLIENT PROJECT NO: 240539

ISSUE FOR PROPOSAL

Galena Park ISD
EXCELLENCE IN ALL FOR ALL OF US

STATE OF TEXAS
RAJEEB K. RAJBHANDARI
116968
LICENSED
PROFESSIONAL ENGINEER
06/10/2025
DKG ENGINEERS
F-18326

CLIENT	
DATE June 10, 2025	PROJECT NUMBER 240539

DRAWING HISTORY

No.	Description	Date

CHECKED BY: RR

DRAWN BY: KS

EROSION
CONTROL PLAN

C 401

B:\24\240539 - GPHS MPF\CO\DIG\Dwgs\C-401 EROSION CONRTOL PLAN.dwg Last Saved: AGLUZMAN
Friday, June 6, 2025 8:57:35 AM

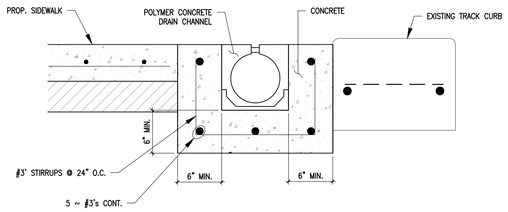

DETAILS NOTES:

1. THE SURFACE DRAINAGE SYSTEM SHALL BE SYSTEM 3000 AS MANUFACTURED BY ACO POLYMER PRODUCTS, INC., CHARDON, OH., OR APPROVED EQUAL.
2. CHANNELS SHALL BE MANUFACTURED FROM POLYESTER RESIN POLYMER CONCRETE.
3. THE SYSTEM SHALL BE 4.25 INCHES (108MM) NOMINAL INSIDE WIDTH WITH A 5.7 IN. (145MM) OVERALL WIDTH. THE CHANNEL SHALL BE 5.7 IN.(145MM) IN OVERALL DEPTH. THE MINIMUM SLOT DIMENSION SHALL BE 0.625 IN. (15MM). ALL CHANNELS SHALL BE INTERLOCKING WITH A MALE/FEMALE JOINT.
4. POLYMER CONCRETE SHALL HAVE MATERIAL PROPERTIES OF: COMPRESSIVE STRENGTH RANGE BETWEEN 14,000–14,500 PSI; FLEXURAL STRENGTH BETWEEN 3600–4500 PSI; TENSILE STRENGTH OF 1500 PSI. THE MATERIAL WATER ABSORPTION RATE SHALL NOT EXCEED 0.1% BY WEIGHT AND SHALL BE RESISTANT TO PROLONGED SALT EXPOSURE, AND REPETITIVE FROST CYCLES.
5. THE SYSTEM SHALL BE INSTALLED IN ACCORDANCE WITH THE MANUFACTURER'S INSTRUCTIONS AND RECOMMENDATIONS. REFER TO PLANS FOR TRENCH AND CATCH BASIN LOCATION.

12 | ACO 3000 SLOTTED DRAIN

15 | NOT USED

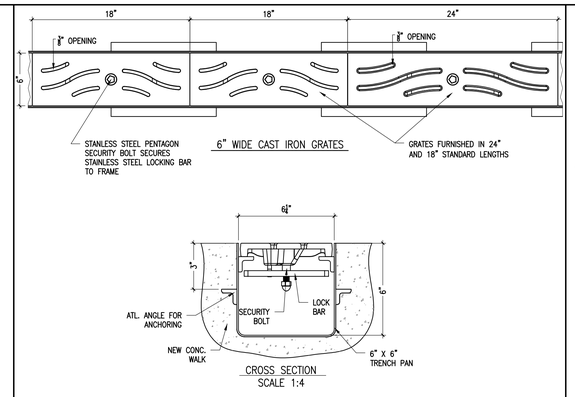

14 | SIDEWALK TRENCH GRATE @ DOWNSPOUT

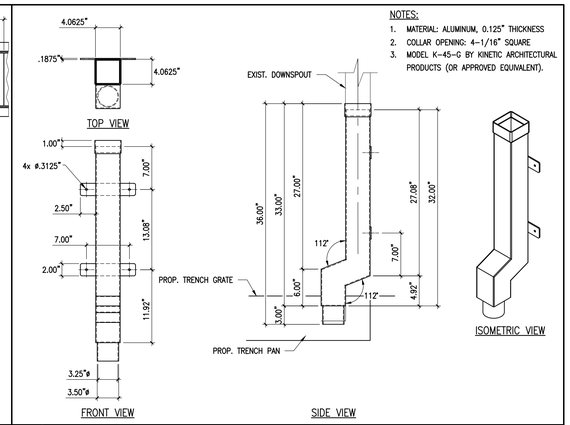

NOTES:
1. MATERIAL: ALUMINUM, 0.125" THICKNESS
2. COLLAR OPENING: 4–1/16" SQUARE
3. MODEL K-45-G BY KINETIC ARCHITECTURAL PRODUCTS (OR APPROVED EQUIVALENT).

13 | DOWNSPOUT BOOT

11 | NOT USED

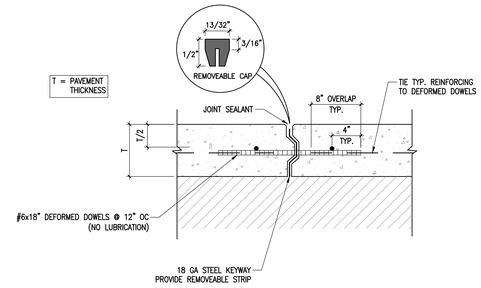

NOTE:
1. SMOOTH DOWELS AND REINFORCING BARS TO BE SECURELY ANCHORED AND SHALL BE SUPPORTED BY AN APPROVED DEVICE TO PREVENT MOVEMENT DURING PAVING OPERATIONS.
2. STAKES TO SUPPORT FORMS SHALL BE DRIVEN A MINIMUM OF 2" BELOW THE TOP OF PAVEMENT.

10 | LONGITUDINAL TIED JOINT (LT)

NOTE:
1. SAWCUTS 1/4" WIDE ARE TO BE SEALED WITH SILICONE JOINT SEALING COMPOUND UP TO 1/8" BELOW TOP OF PAVEMENT. SEE SPECIFICATIONS FOR REQUIRED JOINT SEALANT.
2. COMPLETE SAWCUT JOINTS WITHIN 12 HOURS OF CONCRETE PLACEMENT.

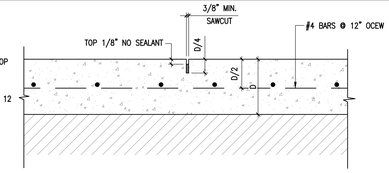

9A | SAWCUT JOINT (S)

NOTE:
1. DOWELS SHALL BE SUPPORTED BY AN APPROVED DEVICE.

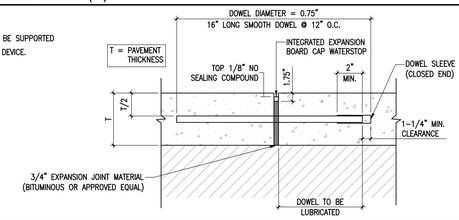

9 | EXPANSION JOINT (X)

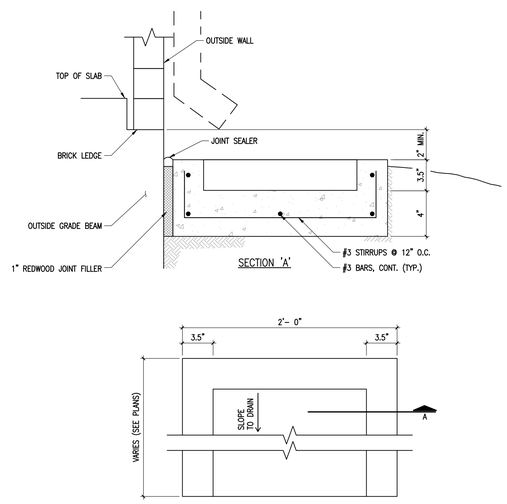

SPECIAL CONCRETE SPLASH PAD

8 | SPLASH PAD

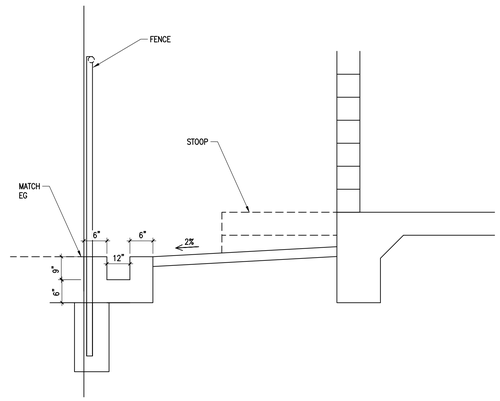

7 | SIDEWALK AT BACK OF BUILDING

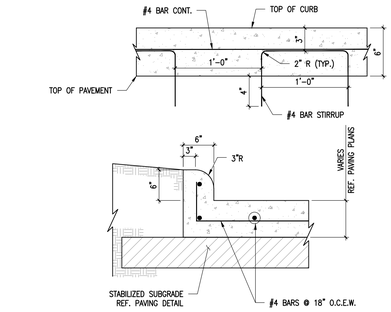

NOTES:
1. FOR NEW PAVEMENT STIRRUPS SHALL BE SET IN FRESH CONCRETE AND SECURED.
2. FOR NEW CURB ON EXISTING PAVEMENT STIRRUPS SHALL BE DRILLED AND EPOXIED INTO THE EXISTING PAVEMENT.
3. MIN COVER ON ALL REINFORCING STEEL SHALL BE 2".
4. PLACE 3/4" INCH PREFORMED EXPANSION JOINTS THROUGH CURB AND GUTTERS AT LOCATIONS OF EXPANSION JOINTS IN PAVEMENT, AT END OF RADIUS RETURNS AT STREET INTERSECTIONS AND DRIVEWAYS, AND AT CURB INLETS. MAXIMUM SPACING SHALL BE 60' CENTERS.
5. PLACE 1/4" TOOLED JOINTS THROUGH CURB AND GUTTERS AT LOCATIONS OF SAWED JOINTS IN PAVEMENT.

6 | CONCRETE CURB

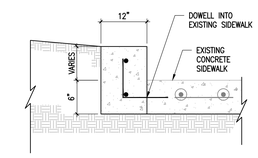

NOTES:
1. FOR NEW CURB ON EXISTING PAVEMENT STIRRUPS SHALL BE DRILLED AND EPOXIED INTO THE EXISTING PAVEMENT.
2. MIN COVER ON ALL REINFORCING STEEL SHALL BE 2".
3. PLACE 3/4" INCH PREFORMED EXPANSION JOINTS THROUGH CURB AND GUTTERS AT LOCATIONS OF EXPANSION JOINTS IN PAVEMENT, AT END OF RADIUS RETURNS AT STREET INTERSECTIONS AND DRIVEWAYS, AND AT CURB INLETS. MAXIMUM SPACING SHALL BE 60' CENTERS.
4. PLACE 1/4" TOOLED JOINTS THROUGH CURB AND GUTTERS AT LOCATIONS OF SAWED JOINTS IN PAVEMENT.

5 | CONCRETE CURB AT EXISTING SIDEWALK

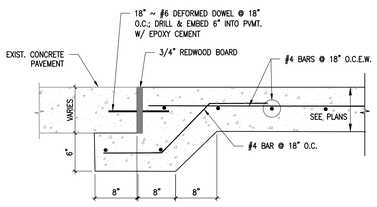

4 | EXIST. TO PROP. CONCRETE PAVEMENT

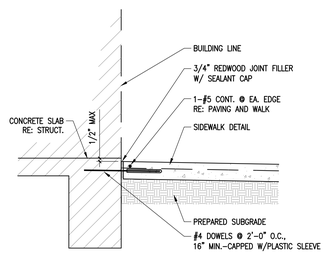

NOTE:
APPLICABLE AT DOOR CONDITIONS ONLY.

3 | CONCRETE SIDEWALK AT BUILDING

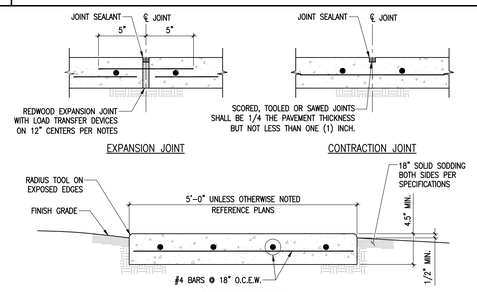

NOTES:
1. SLOPE TRANSVERSE SURFACE 2% (1:50) IN DIRECTION OF GENERAL SITE AREA DRAINAGE.
2. RUNNING SLOPE IN THE DIRECTION OF TRAVEL SHALL NOT EXCEED 5% (1:20).
3. FLOAT EDGES 1/4" MAXIMUM AT CONTROL JOINTS.
4. USE REDWOOD BOARD EXPANSION JOINT w/ #4 SMOOTH BAR w/ LOAD KEY (10" LONG).
5. REDWOOD BOARD EXPANSION JOINTS ON 15 FOOT CENTERS MAXIMUM.
6. CONTROL JOINT SPACING NOT TO EXCEED FIVE (5) FEET. SCORED, TOOLED OR SAWN JOINTS SHALL BE 1/4 THE PAVEMENT THICKNESS BUT NOT LESS THAN ONE (1) INCH.
7. SIDEWALK JOINTS SHALL ALIGN WITH PAVING JOINTS WHEN SIDEWALK IS ADJACENT TO PAVING.

2 | CONCRETE SIDEWALK

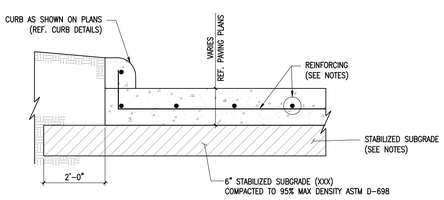

NOTES:
1. AREAS TO RECEIVE PAVING SHALL BE STRIPPED OF THE ORGANIC TOPSOIL TO A DEPTH OF AT LEAST 6-INCHES AND TO A DEPTH AS NECESSARY TO OBTAIN THE DESIRED FINISH GRADE. AFTER REMOVAL OF THE TOPSOIL THE EXPOSED SUBGRADE SHALL BE PROOFROLLED WITH A 15-TON ROLLER TO DETECT ANY WET, SOFT, OR UNSTABLE SOILS. WET, SOFT OR UNSTABLE SOILS SHALL BE TREATED WITH SUITABLE DRYING OR STABILIZING AGENTS OR REMOVED AND REPLACE WITH PROPERLY COMPACTED FILL AS DIRECTED BY THE GEOTECHNICAL ENGINEER.
2. IF IT IS NECESSARY TO PLACE FILL IN ORDER TO BRING THE PAVEMENT SUBGRADE TO THE REQUIRED ELEVATION, SUITABLE EARTH FILL OR SELECT FILL SHALL BE UTILIZED. SUITABLE EARTH FILL AND SELECT FILL SHALL BE FREE OF ORGANICS, DELETERIOUS SUBSTANCES AND BE A CLAYEY SAND OR INACTIVE LEAN CLAY WITH A MAXIMUM LIQUID LIMIT OF 35 AND PLASTICITY INDEX RANGE OF 8 TO 20. FILL MATERIAL SHALL BE PLACED IN 8-INCH THICK LOOSE LIFTS AND COMPACTED TO AN IN-PLACE DENSITY EQUAL TO AT LEAST 95% OF THE MAXIMUM DRY DENSITY AT A MOISTURE CONTENT WITHIN +/-2% OF THE OPTIMUM MOISTURE CONTENT AS DETERMINED BY ASTM D698.
3. REFERENCE PAVING PLANS FOR SUBGRADE STABILIZATION REQUIREMENTS.
4. CONCRETE PAVEMENT SHALL CONSIST OF NOT LESS THAN 5.5 SACKS OF CONCRETE PER CUBIC YARD AND OBTAIN A 28-DAY COMPRESSIVE STRENGTH OF AT LEAST 3,500 PSI. REFERENCE SPECIFICATIONS FOR ADDITIONAL REQUIREMENTS.
5. REINFORCING SHALL CONSIST OF THE THE FOLLOWING
   - 5-INCH THICK PAVING – #4 BARS AT 18" O.C.E.W.
   - 6-INCH THICK PAVING – #4 BARS AT 12" O.C.E.W. OR #5 BARS AT 18" O.C.E.W.
   - 7-INCH AND 8-INCH THICK PAVING – #5 BARS AT 18" O.C.E.W.

1 | CONCRETE PAVEMENT

PBK
www.pbk.com
TX FIRM: BR 1608
HOUSTON, TX 713-965-0008

PKG 3A - GPHS NEW FIELDHOUSE

1000 Keene St.
Galena Park, TX 77547

CLIENT PROJECT NO: 240539

ISSUE FOR PROPOSAL

Galena Park ISD — EXCELLENCE IN ALL FOR ALL PLAN

STATE OF TEXAS — RAJEEB K. RAJBHANDARI — 116966 — LICENSED PROFESSIONAL ENGINEER
06/10/2025
DKG ENGINEERS
F-18326

CLIENT	
DATE June 10, 2025	PROJECT NUMBER 240539

DRAWING HISTORY

No.	Description	Date

CHECKED BY: RR
DRAWN BY: KS

DETAILS

C 501

B:\240240539 - GPHS MPIFCO\DIG\Dwgs\C 501 DETAILS.dwg Last Saved: AGUIZMAN
Friday, June 6, 2025 11:18:05 AM

16 NOT USED

15 NOT USED

NOTES:
1. TAPPING VALVES ARE NOT ALLOWED WHEN TAP IS SAME SIZE AS THE EXISTING MAIN EXCEPT WHEN APPROVED BY THE AUTHORITY HAVING JURISDICTION.

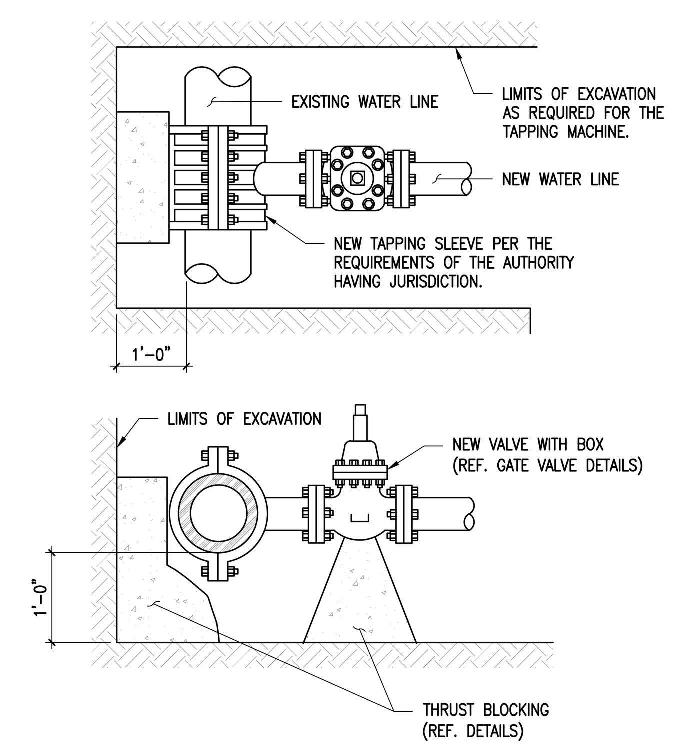

14 WATER TAPPING SLEEVE AND VALVE

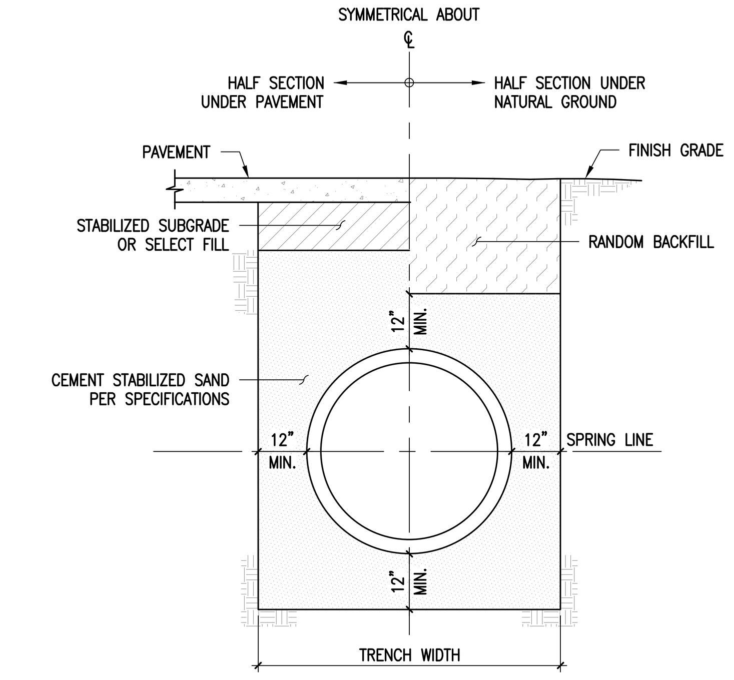

NOTES:
1. THIS DETAIL MAY BE USED ONLY FOR DRY STABLE TRENCH CONDITIONS. WHERE WET SAND CONDITIONS ARE ENCOUNTERED SEWERS SHALL BE BACKFILLED PER THE REQUIREMENTS OF THE WET CONDITION BEDDING AND BACKFILLING DETAIL.
2. ALL BACKFILL SHALL SHALL BE PLACED IN 8-INCH THICK LOOSE LIFTS AND COMPACTED TO AN IN-PLACE DENSITY EQUAL TO AT LEAST 95% OF THE MAXIMUM DRY DENSITY AT A MOISTURE CONTENT WITHIN +/-2% OF THE OPTIMUM MOISTURE CONTENT AS DETERMINED BY ASTM D698.
3. MIN. TRENCH WIDTH SHALL BE PIPE O.D. PLUS 24-INCHES FOR PIPES WITH A NOMINAL SIZE OF 30-INCHES OR LESS AND O.D. PLUS 36-INCHES FOR PIPES WITH A NOMINAL SIZE GREATER THAN 30-INCHES.

13 SANITARY SEWER BEDDING AND BACKFILL

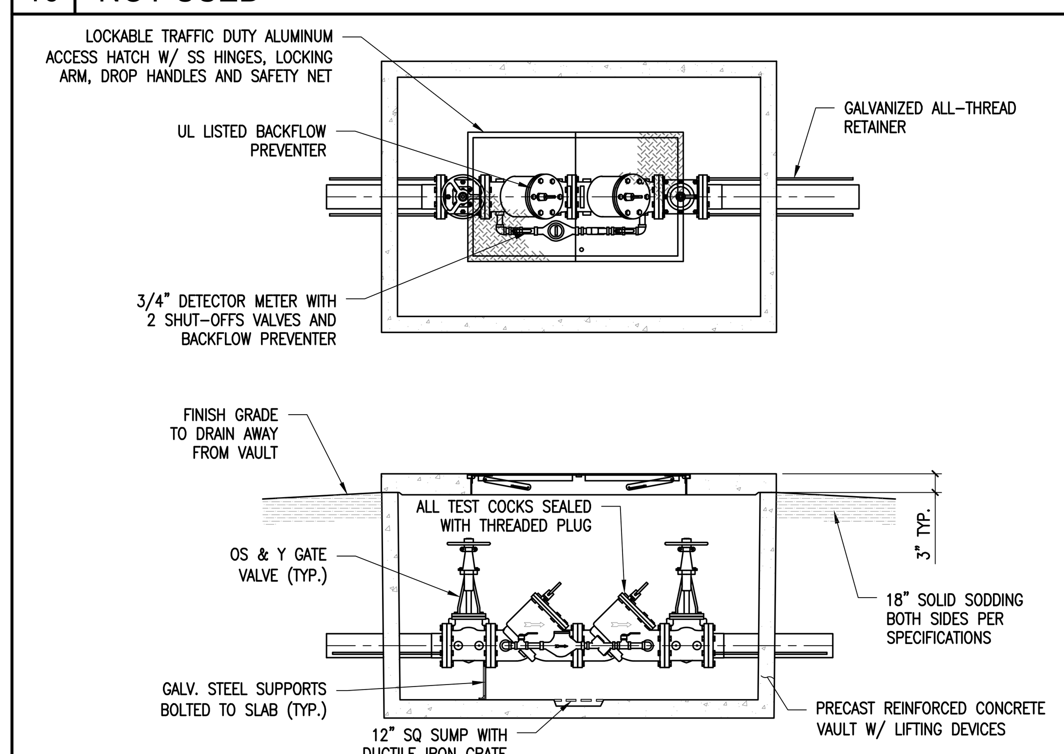

NOTES:
1. CLASS 1 CONCRETE WITH A DESIGN STRENGTH OF 4,500 PSI AT 28 DAYS. REINFORCEMENT SHALL BE GRADE 60 STEEL CONFORMING TO ASTM A615 ON REQUIRED CENTERS.
2. HATCHWAY SHALL BE TRAFFIC RATED ALUMINUM OR STEEL SKID RESISTANT PLATE WITH FRAME. HATCH TO BE FURNISHED WITH 316 SS SNAP LOCK AND BRASS HINGES.

12 DDBP IN VAULT

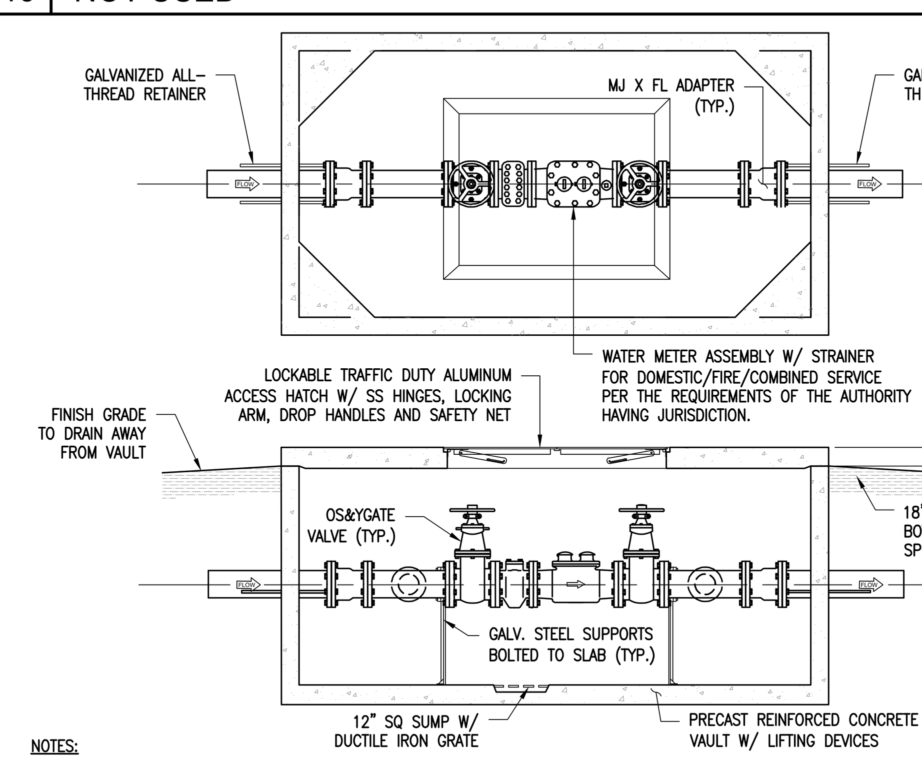

NOTES:
1. CLASS 1 CONCRETE WITH A DESIGN STRENGTH OF 4,500 PSI AT 28 DAYS. REINFORCEMENT SHALL BE GRADE 60 STEEL CONFORMING TO ASTM A615 ON REQUIRED CENTERS.
2. HATCHWAY SHALL BE TRAFFIC RATED ALUMINUM OR STEEL SKID RESISTANT PLATE W/ FRAME. HATCH TO BE FURNISHED WITH 316 SS SNAP LOCK AND BRASS HINGES.
3. ALL PIPING IN THE VAULT SHALL BE DUCTILE IRON.

11 WATER METER

NOTES:
1. OIL SHALL BE PLACED IN HYDRANT AT THE TIME OF INSTALLATION.
2. 4 1/2" NST PUMPER NOZZLE SHALL FACE ROADWAY.
3. VALVE BONNET TO BE ASSEMBLED WITH STAINLESS STEEL BOLTS.
4. IN LOCATIONS OF CUL-DE-SAC'S OMIT TEE AND INSTALL VALVE AND HYDRANT AT END OF LINE.

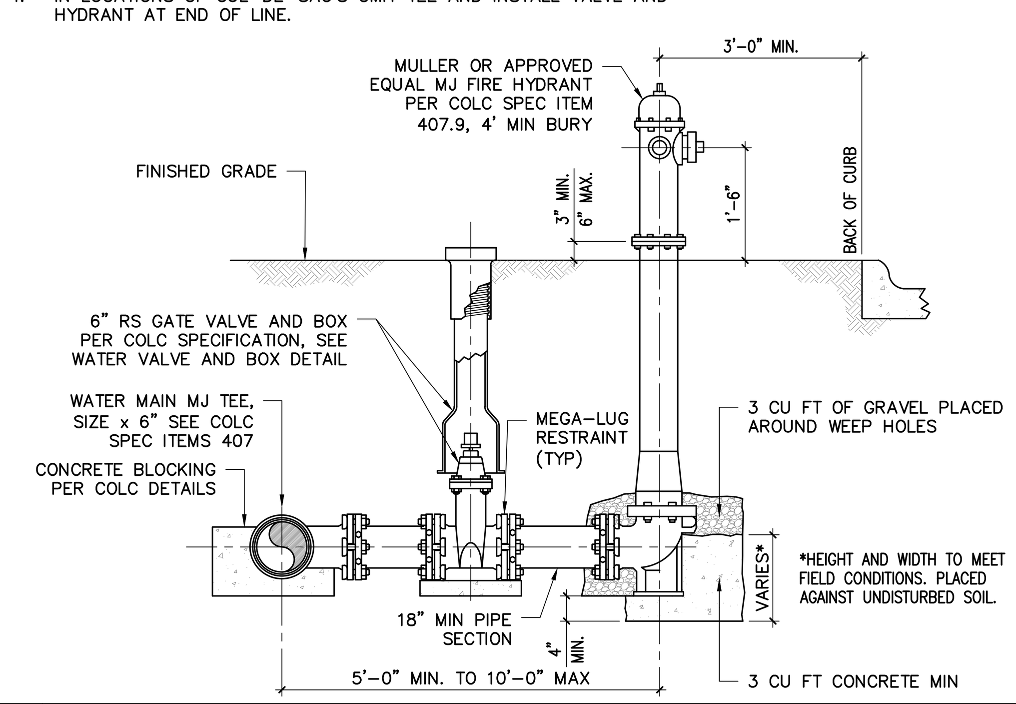

10 FIRE HYDRANT ASSEMBLY

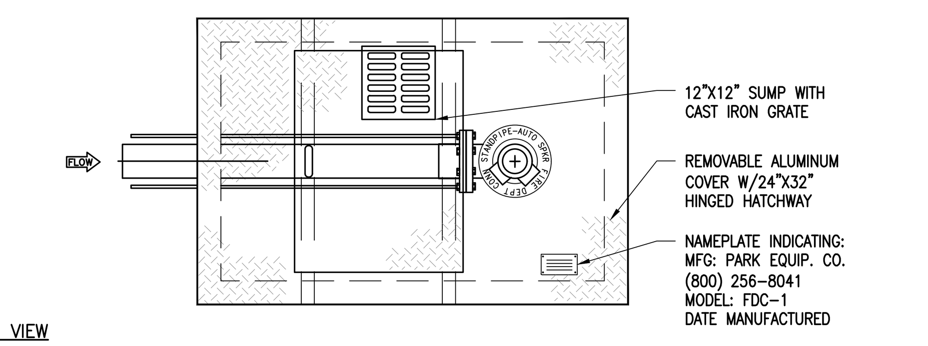

DIMENSIONS					
MODEL	SIZE	L1	W1	H1	WEIGHT LBS
FDC-4	4"	4'-0"	3'-0"	4'-0"	3,300
FDC-6	6"	4'-0"	3'-0"	4'-0"	3,500
FDC-8	8"	6'-0"	3'-6"	6'-0"	5,500

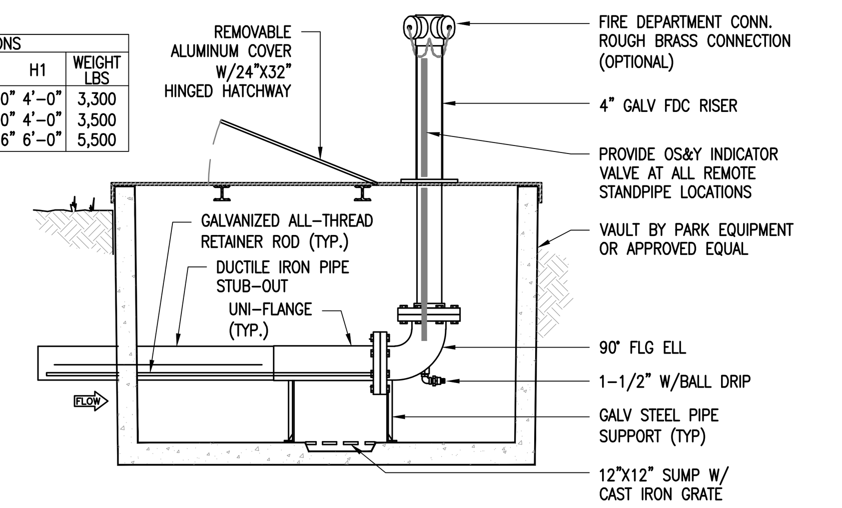

9 FDC DRY STANDPIPE

NOTES:
1. THIS DETAIL MAY BE USED ONLY FOR DRY STABLE TRENCH CONDITIONS. WHERE WET SAND CONDITIONS ARE ENCOUNTERED SEWERS SHALL BE BACKFILLED PER THE REQUIREMENTS OF THE WET CONDITION BEDDING AND BACKFILLING DETAIL.
2. ALL BACKFILL SHALL SHALL BE PLACED IN 8-INCH THICK LOOSE LIFTS AND COMPACTED TO AN IN-PLACE DENSITY EQUAL TO AT LEAST 95% OF THE MAXIMUM DRY DENSITY AT A MOISTURE CONTENT WITHIN +/-2% OF THE OPTIMUM MOISTURE CONTENT AS DETERMINED BY ASTM D698.
3. MIN. TRENCH WIDTH SHALL BE PIPE O.D. PLUS 24-INCHES FOR PIPES WITH A NOMINAL SIZE OF 30-INCHES OR LESS AND O.D. PLUS 36-INCHES FOR PIPES WITH A NOMINAL SIZE GREATER THAN 30-INCHES.

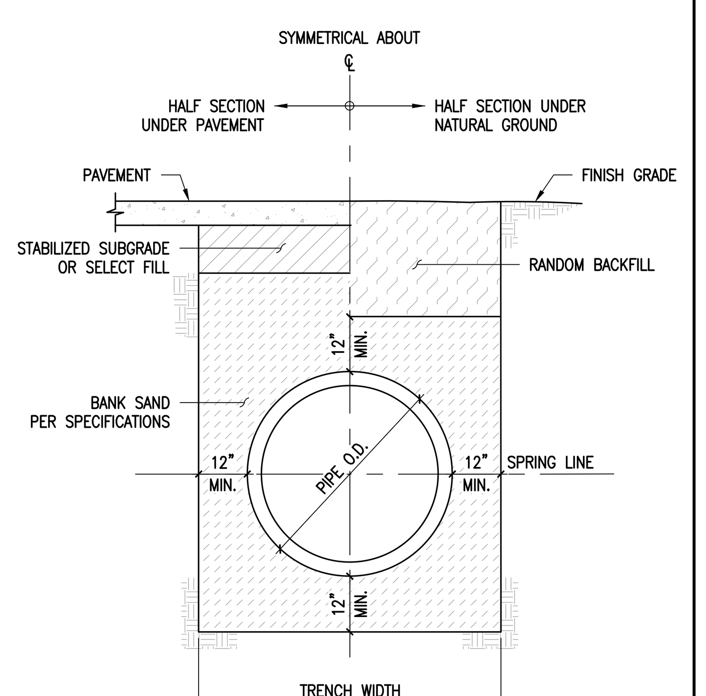

8 WATER LINE BEDDING & BACKFILL

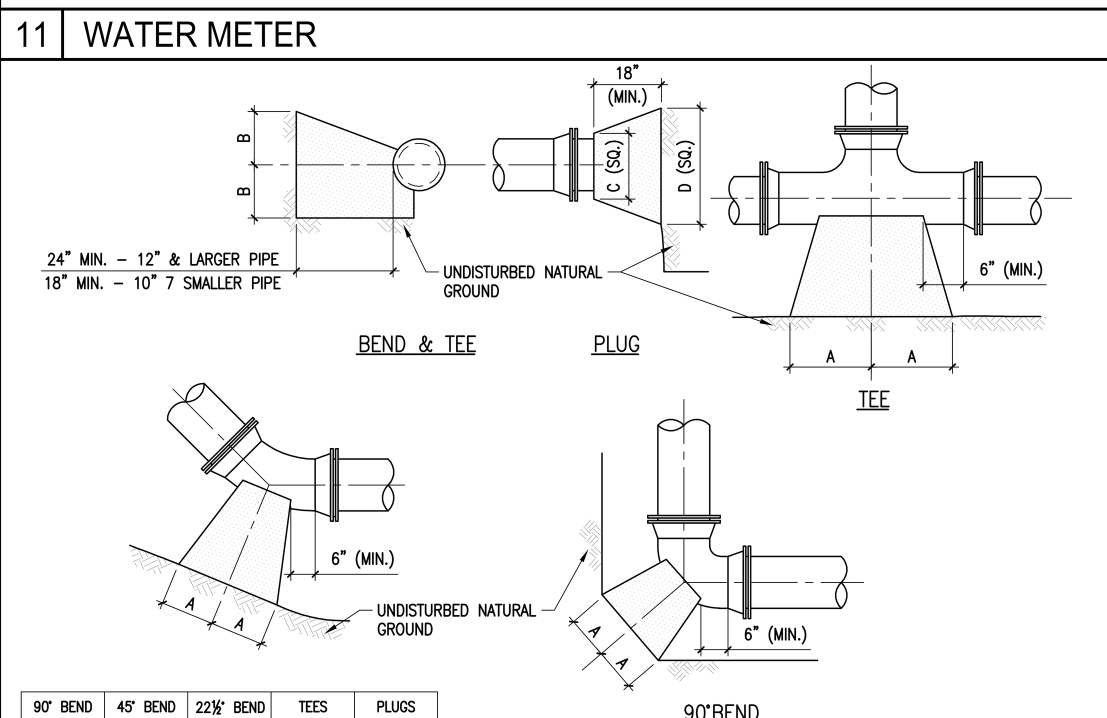

90° BEND		45° BEND		22½° BEND		TEES		PLUGS	
A	B	A	B	A	B	A	B	C	D
12"	7"	6"	7"	6"	6"	7"	8"	8"	14"
14"	8"	7"	9"	6"	6"	8"	11"	8"	18"
16"	10"	9"	10"	6"	8"	10"	12"	10"	21"
22"	13"	12"	13"	8"	10"	13"	16"	12"	29"
29"	21"	16"	21"	11"	16"	18"	24"	16"	41"
38"	27"	21"	27"	12"	24"	24"	30"	20"	54"

NOTES:
1. THRUST BLOCKS AT TRENCH FACE MUST HAVE A MINIMUM BEARING SURFACE OF 1.0 SF AND THE LEAST DIMENSION SHALL BE NO SMALLER THAN 1.5 TIMES PIPE DIAMETER, BUT NOT LESS THAN 1.0 FT.
2. THRUST BLOCKS SHALL BE PACKED AT ALL FITTINGS.
3. ALL FITTINGS SHALL BE M.J. RESTRAINED JOINT (EBAA IRON, SERIES 2000PV, OR APPROVED EQUAL).

7 THRUST BLOCKING

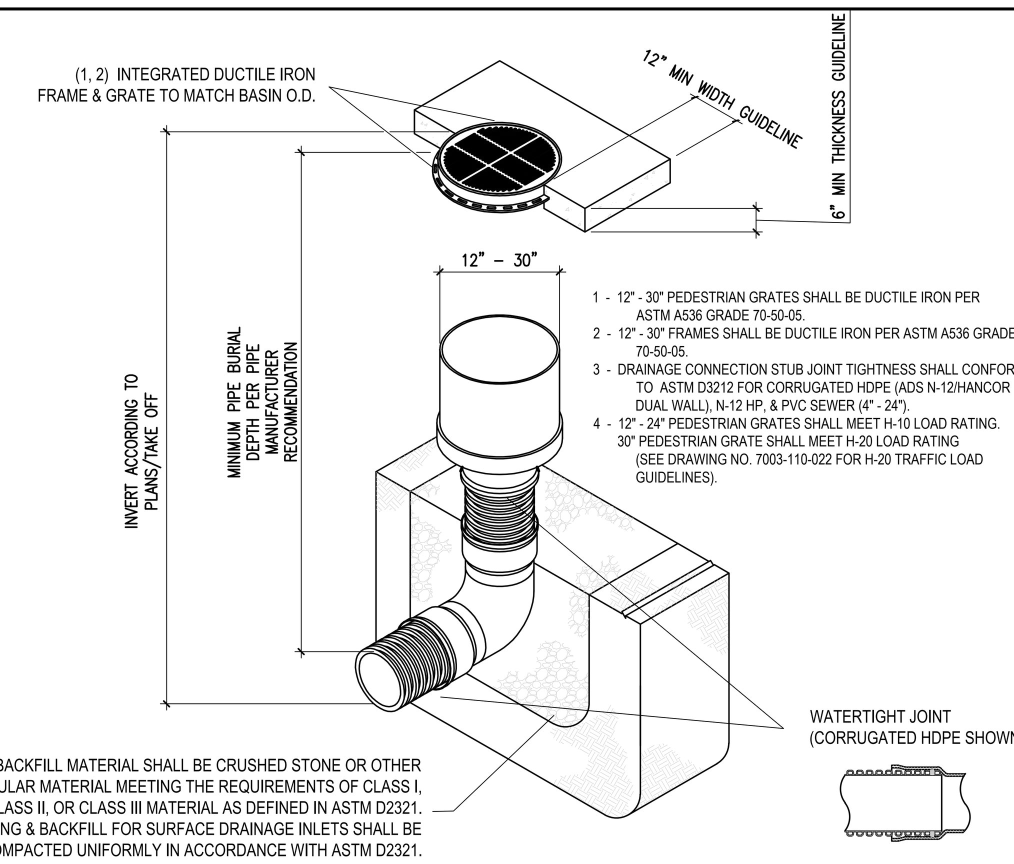

1 - 12" - 30" PEDESTRIAN GRATES SHALL BE DUCTILE IRON PER ASTM A536 GRADE 70-50-05.
2 - 12" - 30" FRAMES SHALL BE DUCTILE IRON PER ASTM A536 GRADE 70-50-05.
3 - DRAINAGE CONNECTION STUB JOINT TIGHTNESS SHALL CONFORM TO ASTM D3212 FOR CORRUGATED HDPE (ADS N-12/HANCOR DUAL WALL), N-12 HP, & PVC SEWER (4" - 24").
4 - 12" - 24" PEDESTRIAN GRATES SHALL MEET H-10 LOAD RATING. 30" PEDESTRIAN GRATE SHALL MEET H-20 LOAD RATING (SEE DRAWING NO. 7003-110-022 FOR H-20 TRAFFIC LOAD GUIDELINES).

THE BACKFILL MATERIAL SHALL BE CRUSHED STONE OR OTHER GRANULAR MATERIAL MEETING THE REQUIREMENTS OF CLASS I, CLASS II, OR CLASS III MATERIAL AS DEFINED IN ASTM D2321. BEDDING & BACKFILL FOR SURFACE DRAINAGE INLETS SHALL BE PLACED & COMPACTED UNIFORMLY IN ACCORDANCE WITH ASTM D2321.

6 INLET STRUCTURE IN CONCRETE

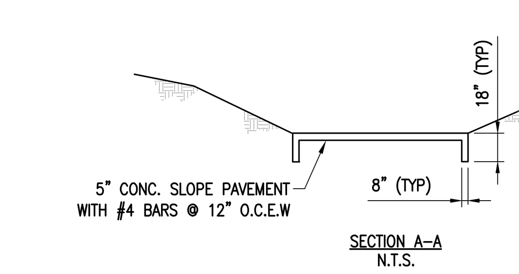

NOTES
1. REINFORCED CONCRETE PAVEMENT TO BE 5" THICK WITH #4 BAR @ 12" ON CENTER EACH WAY
2. 18-INCH DEEP BY 8-INCH WIDE TOE ALL AROUND.

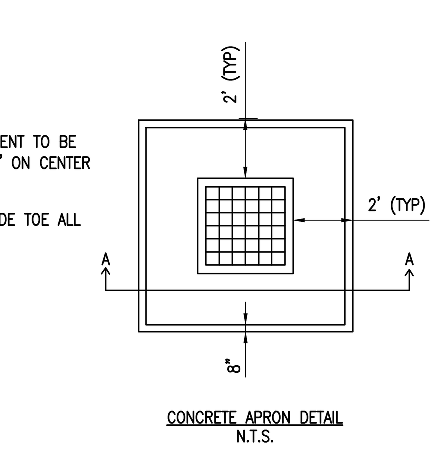

5 CONCRETE APRON AROUND INLET

NOTES:
1. WALLS SHALL BE CONSTRUCTED OF 6" REINFORCED, CLASS "A" (4000 psi) CONCRETE.
2. PRECAST CONCRETE INLET BASINS SHALL BE PROVIDED WITH PRE-FORMED KNOCKOUTS ONLY IN WALLS WHERE PIPE CONNECTIONS ARE TO BE MADE. KNOCKOUTS SHALL BE PIPE O.D. + 4" MAX. AND CIRCULAR SHAPED.
3. IN GRASS AREAS, FOLLOWING FINAL GRADING, THE CONTRACTOR SHALL PLACE SOLID SOD A MINIMUM OF 5 FEET AROUND PERIMETER OF TOP OF INLET.
4. IF THE BASE SECTION IS PRECAST WITH A BOTTOM, A 12" THICK CEMENT STABILIZED SAND BASE SHALL BE REQUIRED BENEATH THE STRUCTURE, EXTENDING 12" PAST THE OUTER FACE.
5. WHEN HDPE PIPE IS USED, PROVIDE 6" CLEARANCE BETWEEN INLET BOTTOM & FLOWLINE OF PIPE. GROUT ENTIRE BOTTOM OF INLET. EXTEND PIPE INTO INLET AT LEAST ONE FULL CORRUGATION. NO JOINT WITHIN 6 FEET OF INLET.
6. INSTALL FILTER FABRIC OVER INLET GRATE TO PREVENT SILTS FROM ENTERING INLET.
7. IF BOTTOM SECTION INSIDE DIM. IS LARGER THAN 30"x30", PROVIDE TRANSITION SECTION TO ACCEPT A 30"x30" FRAME & GRATE.

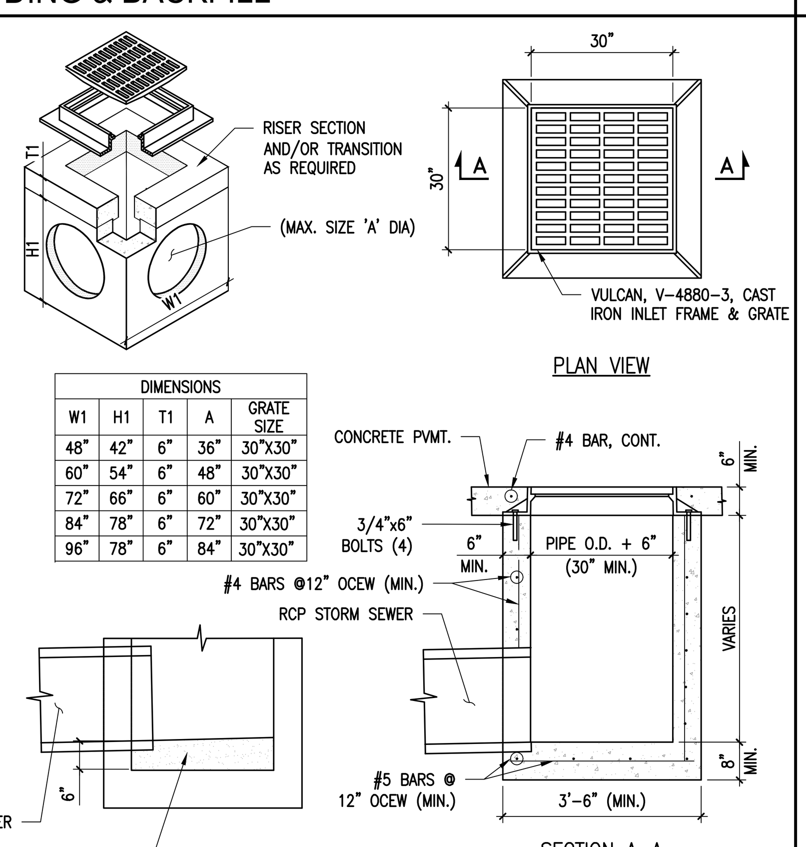

DIMENSIONS				
W1	H1	T1	A	GRATE SIZE
48"	42"	6"	36"	30"X30"
60"	54"	6"	48"	30"X30"
72"	66"	6"	60"	30"X30"
84"	78"	6"	72"	30"X30"
96"	78"	6"	84"	30"X30"

4 AREA INLET

NOTES:
1. WALLS & BOTTOM SHALL BE CONSTRUCTED OF 6" REINFORCED, CLASS "A" (4000 psi) CONCRETE.
2. PRECAST CONCRETE INLET BASINS SHALL BE PROVIDED WITH PRE-FORMED KNOCKOUTS ONLY IN WALLS WHERE PIPE CONNECTIONS ARE TO BE MADE. KNOCKOUTS SHALL BE PIPE O.D. + 4" MAX. AND CIRCULAR SHAPED.
3. IN GRASS AREAS, FOLLOWING FINAL GRADING, THE CONTRACTOR SHALL PLACE SOLID SOD A MINIMUM OF 5 FEET AROUND PERIMETER OF TOP OF INLET.
4. IF THE BASE SECTION IS PRECAST WITH A BOTTOM, A 12" THICK CEMENT STABILIZED SAND BASE SHALL BE REQUIRED BENEATH THE STRUCTURE, EXTENDING 12" PAST THE OUTER FACE.
5. WHEN HDPE PIPE IS USED, PROVIDE 6" CLEARANCE BETWEEN INLET BOTTOM & FLOWLINE OF PIPE. GROUT ENTIRE BOTTOM OF INLET. EXTEND PIPE INTO INLET AT LEAST ONE FULL CORRUGATION. NO JOINT WITHIN 6 FEET OF INLET.
6. INSTALL FILTER FABRIC OVER INLET GRATE TO PREVENT SILTS FROM ENTERING INLET.

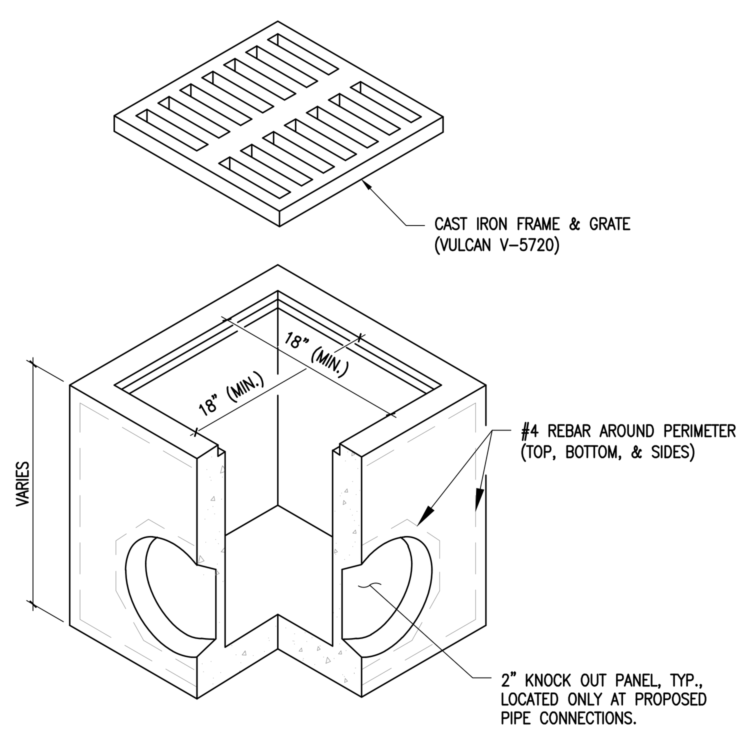

3 CATCH BASIN

NOTES:
1. THIS DETAIL MAY BE USED ONLY FOR DRY STABLE TRENCH CONDITIONS. WHERE WET SAND CONDITIONS ARE ENCOUNTERED SEWERS SHALL BE BACKFILLED PER THE REQUIREMENTS OF THE WET CONDITION BEDDING AND BACKFILLING DETAIL.
2. ALL BACKFILL SHALL SHALL BE PLACED IN 8-INCH THICK LOOSE LIFTS AND COMPACTED TO AN IN-PLACE DENSITY EQUAL TO AT LEAST 95% OF THE MAXIMUM DRY DENSITY AT A MOISTURE CONTENT WITHIN +/-2% OF THE OPTIMUM MOISTURE CONTENT AS DETERMINED BY ASTM D698.
3. FOR R.C.P. STORM SEWERS MIN. TRENCH WIDTH SHALL BE PIPE O.D. PLUS 24-INCHES FOR PIPES WITH A NOMINAL SIZE OF 30-INCHES OR LESS AND O.D. PLUS 36-INCHES FOR PIPES WITH A NOMINAL SIZE GREATER THAN 30-INCHES.
4. FOR H.D.P.E. STORM SEWERS MIN. TRENCH WIDTH SHALL BE PIPE O.D. PLUS 24-INCHES FOR PIPES WITH A NOMINAL SIZE OF 24-INCHES OR LESS AND O.D. PLUS 36-INCHES FOR PIPES WITH A NOMINAL SIZE GREATER THAN 24-INCHES.

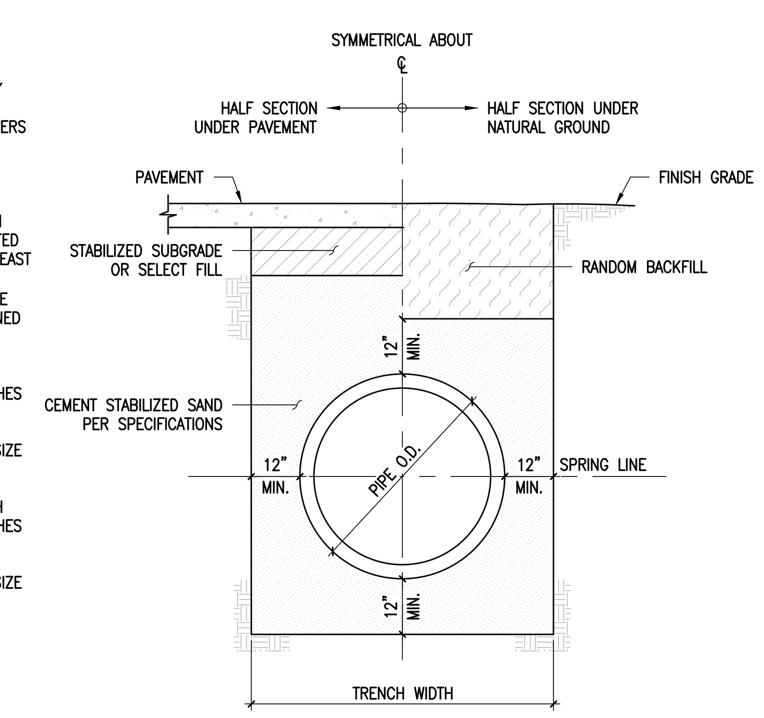

2 STORM SEWER BEDDING AND BACKFILL

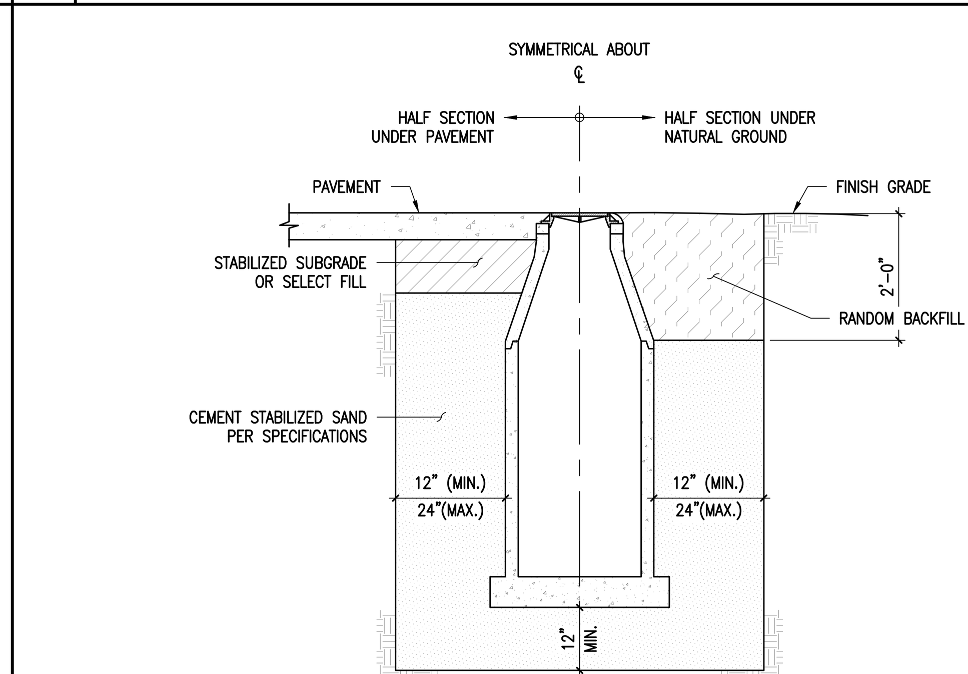

NOTES:
1. THIS DETAIL MAY BE USED ONLY FOR BEDDING AND BACKFILLING OF MANHOLES, INLETS AND OTHER STRUCTURES IN DRY STABLE TRENCH CONDITIONS. WHERE WET SAND CONDITIONS ARE ENCOUNTERED STRUCTURES SHALL BE BACKFILLED PER THE REQUIREMENTS OF THE WET CONDITION BEDDING AND BACKFILLING DETAIL.
2. ALL BACKFILL SHALL SHALL BE PLACED IN 8-INCH THICK LOOSE LIFTS AND COMPACTED TO AN IN-PLACE DENSITY EQUAL TO AT LEAST 95% OF THE MAXIMUM DRY DENSITY AT A MOISTURE CONTENT WITHIN +/-2% OF THE OPTIMUM MOISTURE CONTENT AS DETERMINED BY ASTM D698.

1 STORM SEWER STRUCTURE BEDDING AND BACKFILL

PBK
www.pbk.com
TX FIRM: BR 1608
HOUSTON, TX
713-965-0608

PKG 3A - GPHS NEW FIELDHOUSE

1000 Keene St,
Galena Park, TX 77547

CLIENT PROJECT NO: 240539

ISSUE FOR PROPOSAL

Galena Park ISD
GP
EXCELLENCE IN ALL, FOR ALL, BY ALL

STATE OF TEXAS
RAJEEB K. RAJBHANDARI
116968
LICENSED
PROFESSIONAL ENGINEER
06/10/2025
DKG ENGINEERS
F-18326

CLIENT	
DATE June 10, 2025	PROJECT NUMBER 240539

DRAWING HISTORY

No.	Description	Date

CHECKED BY: RR
DRAWN BY: KS

DETAILS

C 502

B:\24\240539 - GPHS MP\FOC\DIG\Dwgs\C 502 DETAILS.dwg Last Saved: AGLUZMAN
Friday, June 6, 2025 11:12:48 AM

OVERALL SITE PLAN
AS100
FOR BLUEBEAM LABELINGOOR:

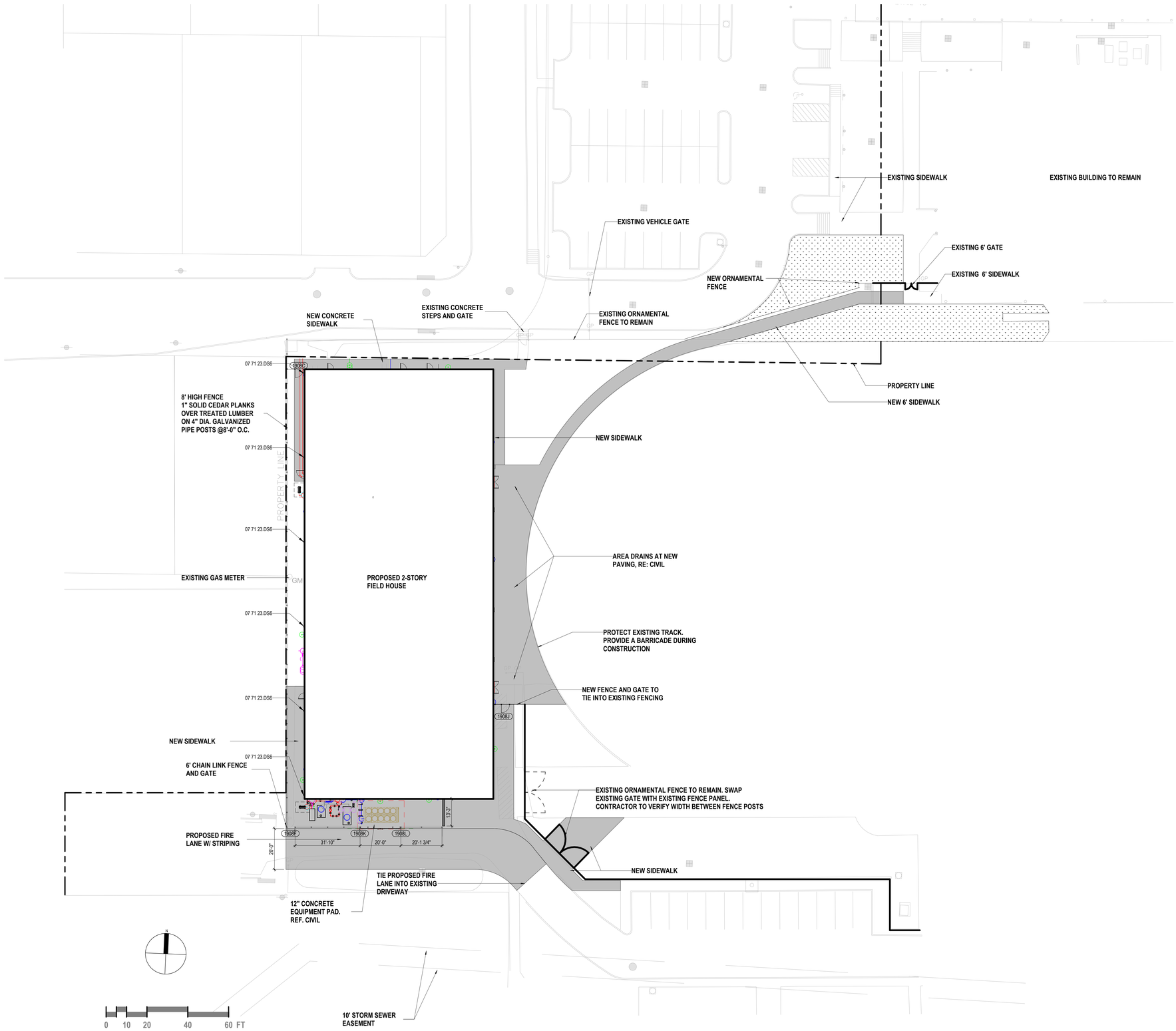

1 SITE PLAN
1" = 20'-0"

GENERAL SITE PLAN NOTES

1. REFER TO CIVIL DOCUMENTS.
2. COORDINATE ALL SPOT ELEVATIONS AND DIMENSIONS WITH CIVIL, LANDSCAPE, AND OR STRUCTURAL DOCUMENTS.
3. PROVIDE POSITIVE DRAINAGE AWAY FROM ALL BUILDINGS OF 1% MINIMUM, 2% MAXIMUM AT ALL EXTERIOR PAVED PEDESTRIAN AREAS, INCLUDING BUT NOT LIMITED TO SIDEWALKS, PATIOS, STAIRS, PAVING, U.N.O.
4. PROVIDE AND INSTALL POSITIVE DRAINAGE AWAY FROM ALL BUILDINGS OF 5% FOR A HORIZONTAL DISTANCE OF 10 FEET AT ALL EXTERIOR NON-PAVED AREAS U.N.O.
5. REFER TO CIVIL DOCUMENTS FOR CONCRETE SIDEWALK EXPANSION JOINTS AND CONCRETE SIDEWALK CONTROL JOINTS.
6. VERIFY AND CONFIRM ALL JOINT LAYOUTS AT ALL CONCRETE SIDEWALKS WITH ARCHITECT PRIOR TO POURING OF CONCRETE.
7. PROVIDE AND INSTALL CONCRETE SIDEWALK EXPANSION JOINTS AT AREAS NOT SPECIFICALLY INDICATED AT 50 FEET ON-CENTER MAX. U.N.O.
8. PROVIDE AND INSTALL CONCRETE SIDEWALK CONTROL JOINTS AT AREAS NOT SPECIFICALLY INDICATED AT DISTANCES EQUIVALENT TO SIDEWALK WIDTH, BUT NOT TO EXCEED 10 FEET ON-CENTER MAX.
9. VERIFY ALL SITE SIGNAGE LOCATIONS WITH ARCHITECT PRIOR TO INSTALLATION OF SITE SIGNAGE.

KEYNOTE LEGEND

NUMBER	DESCRIPTION
07 71 23.DS6	6"X 6" PRE-FINISHED METAL DOWNSPOUT W/ HEAVY GAUGE BOOT. RE: CIVIL

GATE SCHEDULE

MARK	SIZE W	SIZE H	MTL	HARDWARE SET	REMARKS
1908C	4'-0"	6'-0"	Metal - ChainLink	PAD LOCK	
1908F	4'-0"	6'-0"	Metal - ChainLink	PAD LOCK	
1908J	4'-0"	6'-0"	Metal - ChainLink	PAD LOCK	Knox Box
1908K	10'-0"	6'-0"	Metal - ChainLink	PAD LOCK	
1908L	10'-0"	6'-0"	Metal - ChainLink	PAD LOCK	

PBK
www.pbk.com
TX FIRM: BR 1608
HOUSTON, TX
713-965-0608

PKG 3A - GPHS NEW FIELDHOUSE

1000 Keene St.
Galena Park, TX 77547

CLIENT PROJECT NO: 240539

ISSUE FOR PROPOSAL

Galena Park ISD
EXCELLENCE IN ALL FOR ALL STUDENTS

TRUE

REGISTERED ARCHITECT
JAN LEPICOVITZ
25572
STATE OF TEXAS

6/10/2025

CLIENT	
Galena Park ISD	
DATE: June 10, 2025	PROJECT NUMBER: 240539

DRAWING HISTORY

No.	Description	Date

CHECKED BY: TC
DRAWN BY: JA

OVERALL SITE PLAN

AS100

Plot Stamp:
6/10/2025 5:34:21 PM

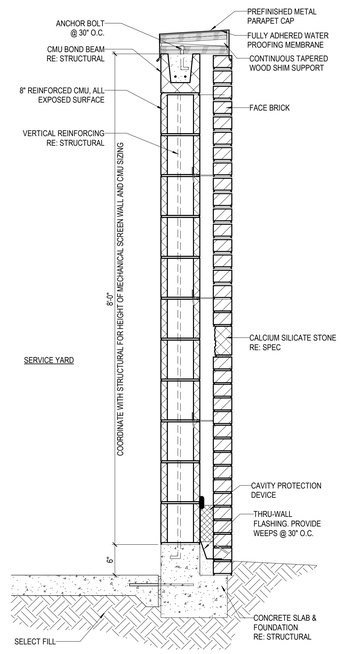

06 WALL SECTION AT SERVICE YARD
1" = 1'-0"

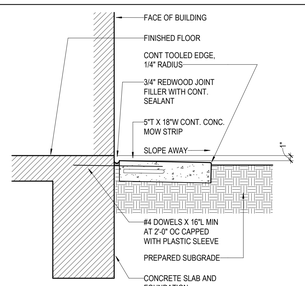

05 MOW STRIP AT EDGE OF BUILDING
1" = 1'-0"

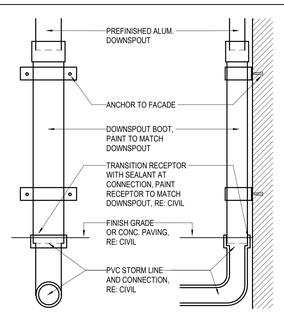

04 DOWNSPOUT BOOT
1" = 1'-0"

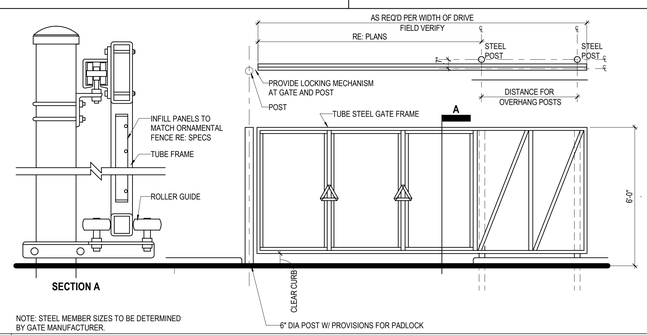

NOTE: STEEL MEMBER SIZES TO BE DETERMINED BY GATE MANUFACTURER.

03 ROLLING GATE
N.T.S.

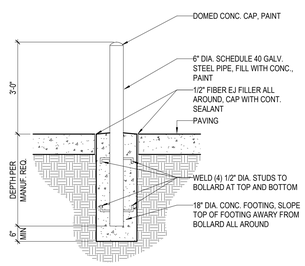

02 BOLLARD
1/2" = 1'-0"

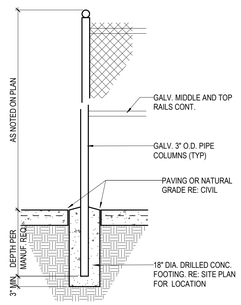

01 FENCE DETAIL
1/2" = 1'-0"

SITE DETAILS
AS711
FOR BLUEBEAM LABELING/OCR:

PBK

HOUSTON, TX
713-965-0608

TX FIRM: BR 1608

www.pbk.com

PKG 3A - GPHS NEW FIELDHOUSE

1000 Keene St,
Galena Park, TX 77547

CLIENT PROJECT NO: 240539

ISSUE FOR PROPOSAL

Galena Park ISD
GP
EXCELLENCE IN ALL FOR ALL BY ALL

REGISTERED ARCHITECT
JAN LEPICOVSKY
25572
STATE OF TEXAS

6/10/2025

CLIENT	
Galena Park ISD	
DATE	PROJECT NUMBER
June 10, 2025	240539

DRAWING HISTORY

No.	Description	Date

CHECKED BY: TC
DRAWN BY: JA

SITE DETAILS

AS711

Plot Stamp:
6/11/2025 10:53:47 AM

3D VIEW & SHEET LIST
S-000
FOR BLUEBEAM LABELING/OCR:

0"
1"

STRUCTURAL SHEET LIST

SHEET NUMBER	SHEET NAME
S-000	3D VIEW & SHEET LIST
S-010	GENERAL NOTES
S-011	GENERAL NOTES
S-012	GENERAL NOTES
S-013	GENERAL SUBGRADE NOTES AND TYP DETAILS
S-101	FOUNDATION PLAN
S-102	SECOND FLOOR FRAMING PLAN
S-103	ROOF FRAMING PLAN
S-104	POP-UP ROOF FRAMING PLAN
S-300	GENERAL CONCRETE AND STL REINF NOTES AND TYP DETAILS
S-301	GENERAL SLAB-ON-GRADE NOTES AND TYP DETAILS
S-302	GENERAL GRADE BEAM NOTES AND TYP DETAILS
S-302A	GENERAL GRADE BEAM NOTES AND TYP DETAILS
S-303SF	GENERAL FOUNDATION NOTES AND TYP DETAILS
S-304	GENERAL FOUNDATION NOTES AND TYP DETAILS
S-310	FOUNDATION DETAILS
S-311	FOUNDATION DETAILS
S-313	FOUNDATION DETAILS (CMU)
S-314	FOUNDATION DETAILS (CMU)
S-315	ELEVATOR PIT DETAILS
S-320	SITE ITEMS FOUNDATION SECTIONS AND DETAILS
S-400	GENERAL CMU NOTES AND TYP DETAILS
S-401	GENERAL CMU NOTES AND TYP DETAILS
S-402	MISC CMU DETAILS
S-403	MISC CMU DETAILS
S-500	GENERAL STEEL NOTES AND TYP DETAILS
S-501	GENERAL STEEL NOTES AND TYP DETAILS
S-502	GENERAL STEEL NOTES AND TYP DETAILS
S-503	GENERAL STEEL CONNECTION NOTES AND TYP DETAILS
S-504	GENERAL COMPOSITE STEEL NOTES AND TYP DETAILS
S-505	GENERAL COMPOSITE STEEL NOTES AND TYP DETAILS
S-506	TYPICAL STEEL DECK DETAILS
S-507	GENERAL STEEL NOTES AND TYP DETAILS
S-508	GENERAL STEEL NOTES AND TYP DETAILS
S-509	GENERAL STEEL NOTES AND TYP DETAILS
S-510	COMPOSITE FRAMING DETAILS
S-511	COMPOSITE FRAMING DETAILS
S-512	COMPOSITE FRAMING DETAILS
S-513	COMPOSITE FRAMING DETAILS
S-520	ROOF FRAMING DETAILS
S-521	ROOF FRAMING DETAILS
S-522	ROOF FRAMING DETAILS
S-524	ROOF FRAMING DETAILS
S-600	TYPICAL WIND BRACING ELEVATIONS
S-610	TYPICAL WIND BRACING DETAILS
S-700	TYPICAL LADDER DETAILS

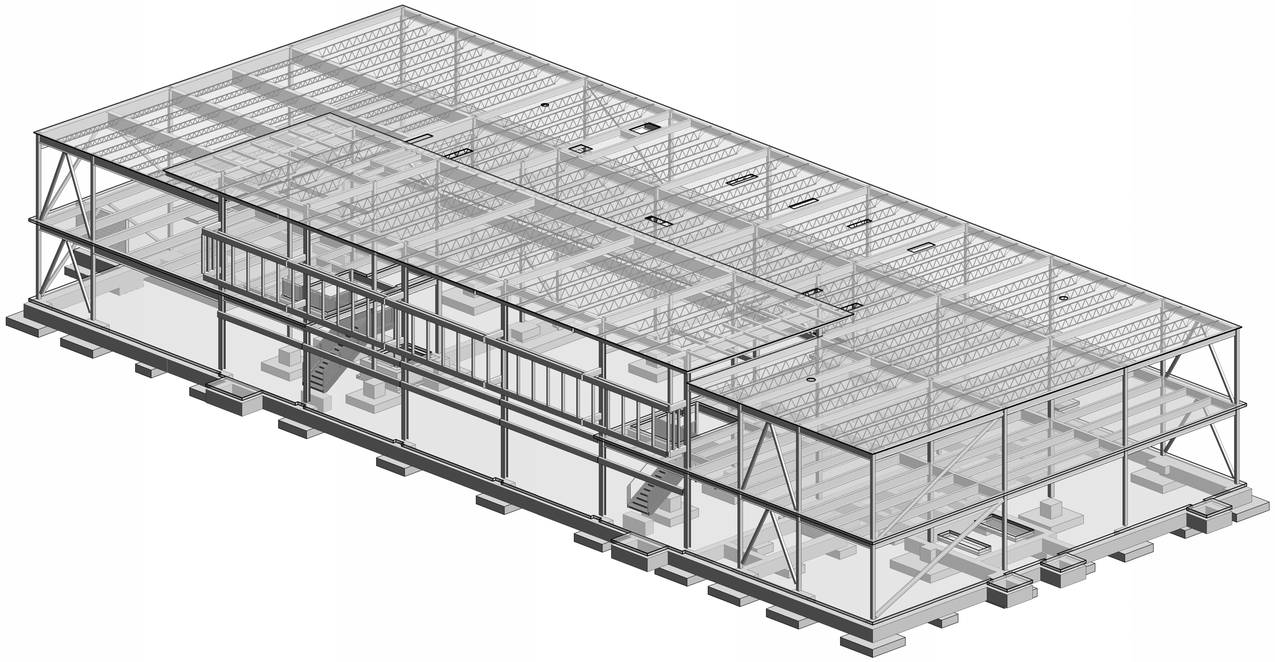

1 3D VIEW - COMPOSITE PLAN

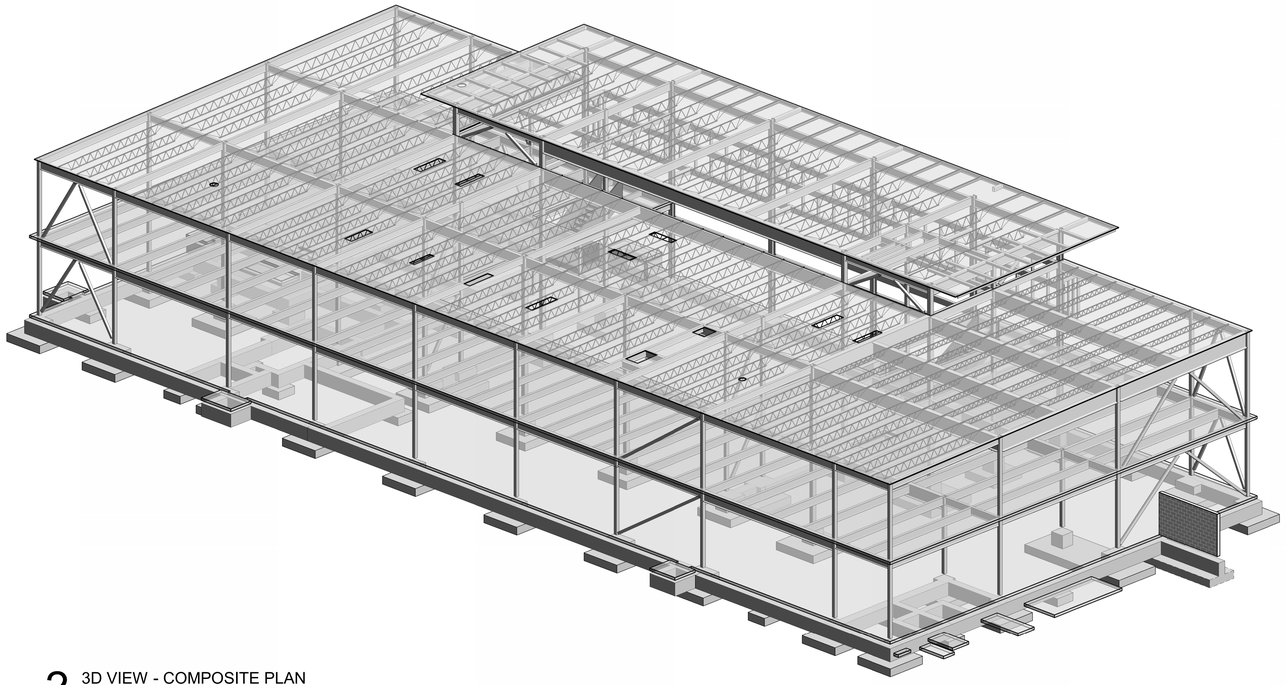

2 3D VIEW - COMPOSITE PLAN

NOTE:
3D IMAGES PRESENTED FOR INFORMATIONAL PURPOSES ONLY AND DO NOT SUPERCEDE INFORMATION SHOWN IN 2D PLANS AND DETAILS. PERSPECTIVE VIEWS ARE PROVIDED FOR A GENERAL UNDERSTANDING OF THE OVERALL STRUCTURAL FRAME. NOT ALL STRUCTURAL ELEMENTS ARE NECESSARILY SHOWN. THESE VIEWS SHOULD NOT BE USED FOR BIDDING, DETAILING OR ERECTION.

Kubala ENGINEERS
Ph: (800)248-3674
www.kubalaengineers.com
TX. REG. NO. F-23612

PBK

HOUSTON, TX
713-965-0608
TX FIRM: BR 1608
www.pbk.com

PKG 3A GPHS - Fieldhouse

1000 Keene St,
Galena Park, TX 77547

CLIENT PROJECT NO: 240539

ISSUE FOR PROPOSAL

KEY PLAN
NORTH: PLAN TRUE

STATE OF TEXAS
JOHN R. KUBALA
106120
PROFESSIONAL ENGINEER
06/10/2025
Kubala Engineers
F-23612

CLIENT	
Galena Park ISD	
DATE 06/10/2025	PROJECT NUMBER 240539

DRAWING HISTORY

No.	Description	Date

CHECKED BY: SI
DRAWN BY: CML

3D VIEW & SHEET LIST

S-000

Plot Stamp:
6/9/2025 5:32:13 PM

GENERAL NOTES
S-010

FOR BLUEBEAM LABELING/OCR:

0"
1"

MATERIAL IDENTIFICATION SYMBOLS

THE FOLLOWING MATERIAL IDENTIFICATION SYMBOLS MAY BE USED IN THE SECTIONS AND DETAILS:

ALUMINUM | CAST-IN-PLACE CONCRETE | EARTH | EARTH (UNDISTURBED) | EXISTING CONSTRUCTION | GRAVEL | GROUT

MASONRY | RIGID INSULATION | ROCK | STEEL | STRUCTURAL PRECAST CONCRETE | WOOD | BACKFILL

THE FOLLOWING MATERIAL IDENTIFICATION SYMBOLS MAY BE USED IN THE PLANS:

STEEL COLUMN | CONCRETE COLUMN | CONCRETE WALL | LOADBEARING MASONRY WALL

STRUCTURAL TILT-UP WALL | NON-LOADBEARING MASONRY WALL | GRATING

EXISTING — BOUNDARY OF EXISTING CONSTRUCTION

DEMO W16x26 — BOUNDARY OF EXISTING CONSTRUCTION TO BE DEMOLISHED

BOUNDARY OF FUTURE EXPANSION

BOUNDARY OF CONCRETE TOPPING SLAB POURED ON SUBSTRUCTURE

SYMBOLIC LINEWORK

THE FOLLOWING SYMBOLIC LINEWORK MAY BE USED THROUGHOUT THE DRAWINGS:

- REFERENCE GRID LINE SYMBOL
- CENTERLINE SYMBOL
- PLAN MATCHLINE SYMBOL
- NON-STRUCTURAL LINE SYMBOL
- WELDED WIRE REINFORCEMENT SYMBOL
- STEEL JOIST LINE SYMBOL
- OPENING LINE SYMBOL
- PIPING RUN

PLAN SYMBOLS

THE FOLLOWING SYMBOLS MAY BE USED THROUGHOUT THE PLANS:

SLOPE TRANSITION INDICATOR SYMBOL

SLOPE EDGE — SLOPE DN — RAMP SLOPE INDICATOR SYMBOL

12 / 1 — HORIZONTAL DIMENSION — VERTICAL DIMENSION — SLOPE PITCH INDICATOR SYMBOL

SIZE OF STEP (IF PROVIDED) — 3" — STEP INDICATOR SYMBOL

SIZE OF STEP (IF PROVIDED) — 8" — STEP TO SLOPE INDICATOR SYMBOL

RIDGE INDICATOR SYMBOL

N — PROJECT NORTH ARROW SYMBOL

SLOPE — SLOPE MARK

2 — KEYNOTE INDICATOR SYMBOL

S1 — SLAB OR DECK TYPE (IF PROVIDED) — ONE-WAY SLAB OR DECK SPAN INDICATOR SYMBOL

S1 — SLAB OR DECK TYPE (IF PROVIDED) — TWO-WAY SLAB SPAN INDICATOR SYMBOL

DEAD END — STRESSING END — POST-TENSIONING TENDON SYMBOLS

ROOF DECK TYPE 1 — DECK SYMBOL

SMALL OPENINGS IN STRUCTURAL SLAB OR DECK

OPEN — LARGE OPENING IN STRUCTURAL SLAB OR DECK

XXX-x 4,000# — ROUGH OUTLINE OF UNIT; UNIT NAME (IF PROVIDED); MAXIMUM TOTAL ALLOWABLE WEIGHT OF UNIT OR EQUIPMENT INCLUDING WEIGHT OF CURB — MECHANICAL UNIT OR OTHER EQUIPMENT

STEEL ANNOTATION STYLES

WF COLUMN SIZE REF PLAN — W10X33 — BP-T — BASE PLATE TYPE (IF PROVIDED) REFER TO S-500

WF COLUMN LEGEND

HSS COLUMN SIZE REF PLAN — HSS4X4X1/8 — BP-T — BASE PLATE TYPE (IF PROVIDED) REFER TO S-500

HOLLOW STRUCTURAL STEEL COLUMN LEGEND

THE FOLLOWING STRUCTURAL ANNOTATIONS MAY APPEAR ON THE STEEL FRAMING PLANS. ALL LOADS INDICATED ARE FACTORED:

BEAM SIZE — W16x26 C=1.5 R20/25 — BEAM CAMBER; LEFT END VERTICAL SHEAR REACTION (IN KIPS); RIGHT END VERTICAL SHEAR REACTION (IN KIPS)

NOTE: IF ONLY ONE REACTION IS PROVIDED, IT APPLIES TO BOTH ENDS

NON-COMPOSITE BEAM

NUMBER OF SHEAR STUDS AT UNIFORM SPACING — BEAM SIZE — W16x26 (18) C=1.5 R20/25 — BEAM CAMBER; LEFT END VERTICAL SHEAR REACTION (IN KIPS); RIGHT END VERTICAL SHEAR REACTION (IN KIPS)

NOTE: IF ONLY ONE NUMBER IS PROVIDED, REACTION APPLIES TO BOTH ENDS

COMPOSITE BEAM

W16x26 C=1.5 R20/25 — (8) (5) (10) (5) — ALTERNATE SHEAR STUD CALLOUT FOR NON-UNIFORM SPACING

VERTICAL BRACE

BEAM BOTTOM BRACING ON PLAN

INDICATES MOMENT CONNECTION - REF MOMENT CONNECTION DETAILS

INDICATES STEEL BEAM SPLICE - REF STRUCTURAL STEEL SIMPLE BEAM CONNECTION SBX-1

20 K SP1 — LOADING CONDITION, REF GENERAL NOTES; JOIST SERIES; NORMAL JOIST DEPTH — INDICATES OPEN-WEB STEEL JOIST KEY

REF PLAN FOR SIZE — INDICATES BOTTOM OF KNEE BRACE — INDICATES KNEE BRACE

VIEW REFERENCE SYMBOLS

THESE FOLLOWING SYMBOLS MAY BE USED THROUGHOUT THE DRAWINGS TO REFER TO OTHER VIEWS:

REFERENCE OBJECT — DETAIL NUMBER OR LETTER — 1/S-600 — SHEET NUMBER — FRAMING ELEVATION SYMBOL

DETAIL NUMBER OR LETTER — A — SHEET NUMBER — S-300 — AREA OR ITEM BEING DETAILED — DETAIL REFERENCE SYMBOL

REFERENCE OBJECT — 1/S300 — 1/S300 — DETAIL NUMBER OR LETTER — SHEET NUMBER — OVERALL SECTION SYMBOL

REFERENCE OBJECT — 1/S300 — DETAIL NUMBER OR LETTER — SHEET NUMBER — PARTIAL SECTION SYMBOL

UNIVERSAL SYMBOLS

THESE FOLLOWING SYMBOLS MAY BE USED THROUGHOUT THE DRAWINGS:

REVISION NUMBER OR LETTER — 2 — AREA OR ITEM BEING REVISED — REVISION CLOUD SYMBOL

SURFACE REFERENCED — TOSC ELEV 10'-0" — ELEVATION OF SURFACE — ELEVATION DESIGNATION SYMBOL

GRID LABEL — GRID — REFERENCE GRID INDICATOR SYMBOL

WP — WORK POINT SYMBOL

FLAT FACE BREAK MARK | CURVED FACE BREAK MARK | LINE BREAK MARK

CONTINUOUS WATERSTOP — SHEAR KEY — SHEAR KEY WIT CONT. WATERSTOP

FOUNDATION ANNOTATION STYLES

THE FOLLOWING STRUCTURAL ANNOTATIONS MAY APPEAR ON THE FOUNDATION PLANS:

PIER SHAFT DIA. — 24/48 — PIER BELL DIA. — -3'-6" — TOP OF PIER ELEVATION (IF PROVIDED) BELOW TOSC ELEV

F1 — SPREAD FOOTING MARK — -3'-6" — TOP OF FOOTING ELEVATION (IF PROVIDED) BELOW TOSC ELEV

INDICATES THAT COLUMN STOPS AT THIS LEVEL

INDICATES STRUCTURE OVER VOID BOX; REF EXPANSIVE CLAY SOIL DETAILS

WF5.0 — WALL FOOTING MARK; MW2 — WALL MARK (IF PROVIDED)

STEP IN FOOTING — ALL STEPS WILL BE NOTED

CONCRETE ANNOTATION STYLES

THE FOLLOWING STRUCTURAL ANNOTATIONS MAY APPEAR ON THE CONCRETE FRAMING PLANS:

4-#4x5'-0" TOP — REINFORCING STEEL NOTED IN PLAN SHALL BE LOCATED ACCORDING TO PLAN NOTES, TYPICAL VIEWS, AND SCHEDULES. HOOKS ARE INDICATED IN PLAN WHERE REQUIRED FOR NON-SCHEDULED REINFORCING STEEL. WHERE HOOKS ARE SHOWN, LENGTHS PROVIDED DO NOT INCLUDE HOOK.

Tx — A SINGLE ARROWED LINE INDICATES THE EXTENT OVER WHICH THE REINFORCING STEEL IS TO BE DISTRIBUTED WITH AN EQUAL SPACING BETWEEN BARS.

REFERENCE LINE OR OBJECT WHERE REINFORCING STOPS

#4x20'-0" BOTTOM BARS @12" — A DOUBLE ARROWED LINE INDICATES THAT THE REINFORCING STEEL IS TO BE PROVIDED IN EACH DIRECTION UNTIL ONE OF THE FOLLOWING OCCURS:

1. AN EDGE OF SLAB
2. A SIGNIFICANT CHANGE IN THE SLAB GEOMETRY
3. OTHER REINFORCING STEEL OF A SIMILAR NATURE IS SHOWN.

TYPICAL STRUCTURAL ABBREVIATIONS

A
AB ANCHOR BOLT
AFF ABOVE FINISH FLOOR
ACI AMERICAN CONCRETE INSTITUTE
ADD'L ADDITIONAL
ADJ ADJACENT
AFF ABOVE FINISHED FLOOR
AFS ARCH FINISH SURFACE
AGGR AGGREGATE
AISC AMERICAN INSTITUTE OF STEEL CONSTRUCTION
AISI AMERICAN IRON AND STEEL INSTITUTE
ALT ALTERNATE
ARCH ARCHITECTURAL
ASCE AMERICAN SOCIETY OF CIVIL ENGINEERS
ASTM AMERICAN SOCIETY FOR TESTING AND MATERIALS
AWS AMERICAN WELDING SOCIETY

B
BF BACK FACE
BFB BOTTOM FLANGE BRACE
BFF BELOW FINISH FLOOR
BL BLOCK LINTEL
BLE BRACKET LEDGE ELEVATION
BLK BLOCK
BLKG BLOCKING
BM BEAM
BO BOTTOM OF
BOA BACK OF ANGLE
BOS BOTTOM OF STEEL
BOT BOTTOM
BP BASE PLATE
BRG BEARING
BRKT BRACKET
BLE BRICK LEDGE ELEVATION
BTWN BETWEEN

C
C CHANNEL
COMP COMPRESSION
CANT CANTILEVER
CGS CENTROID OF TENDONS
CIP CAST IN PLACE
CJ CONTROL JOINT
CL CENTER LINE
CJP COMPLETE JOINT PENETRATION
CLR CLEAR
CMU CONCRETE MASONRY UNIT
COL COLUMN
COMP COMPRESSION
CONN CONNECTION
CONC CONCRETE
CONST CONSTRUCTION
CONT CONTINUOUS
CONTR CONTRACTOR
COR CORNER
CRSI CONCRETE REINFORCING STEEL INSTITUTE

D
DBA DOWEL BAR ANCHOR
DBL DOUBLE
DET DETAIL
DIA DIAMETER
DIAG DIAGONAL
DIM(S) DIMENSION(S)
DL DEAD LOADS
DT DOUBLE TEE
DS DOWNSPOUT
DWG(S) DRAWING(S)
DWL(S) DOWEL(S)

E
EA EACH
EAO EDGE ANGLE OFFSET
EDC ELECTRICAL DISTRIBUTION CENTER
EF EACH FACE
EIFS EXTERIOR INSULATION AND FINISH SYSTEM
EJ EXPANSION JOINT
EL ELEVATION
ELEC ELECTRICAL
ENGR ENGINEER
EOD EDGE OF ROOF DECK
EOS EDGE OF FLOOR SLAB
EQ EQUAL
EQUIV EQUIVALENT
EW EACH WAY
EXIST EXISTING
EXP EXPANSION
EXT EXTERIOR
EX-STR EXTRA STRONG

F
FABR FABRICATOR
FD FLOOR DRAIN
FDN FOUNDATION
FF FINISHED FLOOR
FL FLOOR
FLG FLANGE
FM FACTORY MUTUAL
FRP FIBER REINFORCED PLASTIC
FS FAR SIDE
FTG FOOTING
FP FIREPROOF(ING)
FV FIELD VERIFY

G
GA GAUGE
GB GRADE BEAM
GALV GALVANIZED
GC GENERAL CONTRACTOR
GR GRADE
GYP BD GYPSUM BOARD

H
H HEIGHT
HORIZ HORIZONTAL
HSA HEADED STUD ANCHOR

I
IBC INTERNATIONAL BUILDING CODE
INFO INFORMATION
INT INTERIOR
INTERM INTERMEDIATE
ISO ISOLATION
IT INVERTED TEE

J
JBE JOIST BEARING ELEVATION
JST JOIST
JT JOINT

K
KIP 1000 POUNDS
KLF KIP PER LINEAR FOOT
KSF KIPS PER SQUARE FOOT
KSI KIPS PER SQUARE INCH

L
L ANGLE OR LENGTH
LB POUNDS
Ld TENSION DEVELOPMENT LENGTH AS SHOWN IN REINFORCING LAP SCHEDULE
LL LIVE LOAD
LLH LONG LEG HORIZONTAL
LLV LONG LEG VERTICAL
LOC LOCATION
LONG LONGITUDINAL
LSH LONG SIDE HORIZONTAL
LSV LONG SIDE VERTICAL
LWC LIGHT WEIGHT CONCRETE

M
MAX MAXIMUM
MC MOMENT CONNECTION
MECH MECHANICAL
MEZZ MEZZANINE
MFR MANUFACTURER
MIN MINIMUM
MISC MISCELLANEOUS
MO MASONRY OPENING
MTL METAL
MTR MATERIAL

N
NIC NOT IN CONTRACT
NO OR # NUMBER
NOM NOMINAL
NS NEAR SIDE
NTS NOT TO SCALE
NWC NORMAL WEIGHT CONCRETE (150 PCF)

O
OC ON CENTER
OD OUTSIDE DIAMETER
OF OUTSIDE FACE
OH OPPOSITE HAND
OPNG(S) OPENING(S)

P
PAF POWDER ACTUATED FASTENER
PCC PRECAST CONCRETE
PCF POUNDS PER CUBIC FOOT
PCI PRECAST AND PRESTRESSED CONCRETE INSTITUTE
PT POST-TENSIONING INSTITUTE
PE PROFESSIONAL ENGINEER
PEMB PRE-ENGINEERED METAL BUILDING
PENTR PENETRATION
PL PLATE
PLAM PLASTIC LAMINATE
PLF POUNDS PER LINEAR FOOT
PP PARTIAL PENETRATION
PREFAB PREFABRICATED
PRELIM PRELIMINARY
PSF POUNDS PER SQUARE FOOT
PSI POUNDS PER SQUARE INCH
PT POST-TENSIONING

Q
QTY QUANTITY

R
R RADIUS
RAF RAISED ACCESS FLOOR
RCP REINFORCED CONCRETE PIPE
RD ROOF DRAIN
REF REFER TO
REINF REINFORCING
REQD REQUIRED
REV REVERSE
RND ROUND
RO ROUGH OPENING
RTU ROOF TOP UNIT

S
SCHED SCHEDULE(D)
SECT SECTION
SF SQUARE FOOT (FEET)
SHT SHEET
SIM SIMILAR
SPA SPACE
SPECS SPECIFICATIONS
SPEC'D SPECIFIED
STIFF STIFFNER
STIR STIRRUPS
STL STEEL
SUBCONTR SUB-CONTRACTOR
SW SIDEWALK
SYM SYMMETRICAL

T
TEMP TEMERATURE
T TENSION
TERR TERRAZO
THK THICK
T&B TOP AND BOTTOM
TOB TOP OF BEAM
TOF TOP OF FOOTING
TOP TOP OF PIER ELEVATION
TOS TOP OF STEEL
TOSC TOP OF STRUCTURAL CONCRETE
TOW TOP OF WALL
TYP TYPICAL

U
UNO UNLESS NOTED OTHERWISE

V
V SHEAR
VERT VERTICAL

W
WS WATERSTOP
WPFG WATERPROOFING
WWF WELDED WIRE FABRIC
WB WIND BRACE
WL WIND LOAD
W/ WITH
W/O WITHOUT
WP WORKING POINT
WD WOOD

Kubala ENGINEERS
Ph: (800)246-3674
www.kubalaengineers.com
TX. REG. NO. F-23612

PBK
www.pbk.com
TX FIRM: BR 1608
HOUSTON, TX 713-965-0608

PKG 3A GPHS - Fieldhouse

1000 Keene St.
Galena Park, TX 77547

CLIENT PROJECT NO: 240539

ISSUE FOR PROPOSAL

KEY PLAN
NORTH: PLAN TRUE

STATE OF TEXAS — JOHN R. KUBALA — 106120 — PROFESSIONAL ENGINEER — 06/10/2025
Kubala Engineers F-23612

CLIENT	
Galena Park ISD	
DATE 06/10/2025	PROJECT NUMBER 240539

DRAWING HISTORY

No.	Description	Date

CHECKED BY: SI
DRAWN BY: CML

GENERAL NOTES

S-010

Plot Stamp:
6/9/2025 5:32:14 PM

GENERAL NOTES
S-011
FOR BLUEBEAM LABELING/OCR:

0"
1"

GENERAL:

CODES, DRAWINGS AND SPECIFICATIONS:

1. THE CONSTRUCTION DOCUMENTS ARE BASED ON THE REQUIREMENTS OF THE INTERNATIONAL BUILDING CODE IBC 2009. ALL CODES AND SPECIFICATIONS LISTED ABOVE SHALL INCLUDE ALL AMENDMENTS AND ADDENDA IN FORCE AT THE DATE OF THE CONTRACT DOCUMENTS.

TYPICAL DETAILS:

1. TYPICAL DETAILS SHOWN ON THE DRAWINGS SHALL APPLY TO ALL SIMILAR LIKE CONDITIONS OCCURRING ON THE PROJECT WHETHER OR NOT THEY ARE KEYED IN AT EACH PARTICULAR LOCATION.

MISCELLANEOUS:

1. WHERE CONFLICTS EXIST BETWEEN THE VARIOUS PUBLICATIONS AS SPECIFIED HEREIN, THE STRICTER REQUIREMENTS SHALL GOVERN UNLESS NOTED OTHERWISE. WHERE CONFLICTS EXIST BETWEEN THE VARIOUS PARTS OF THE STRUCTURAL CONTRACT DOCUMENTS (STRUCTURAL DOCUMENTS, SPECIFICATIONS) AS SPECIFIED HEREIN, THE STRICTER REQUIREMENTS SHALL GOVERN.
2. IT IS THE RESPONSIBILITY OF THE GENERAL CONTRACTOR TO OBTAIN ALL CONTRACT DOCUMENTS AND LATEST ADDENDA AND TO SUBMIT SUCH DOCUMENTS TO ALL SUBCONTRACTORS AND MATERIAL SUPPLIERS PRIOR TO THE SUBMITTAL OF SHOP DRAWINGS, FABRICATION OF ANY STRUCTURAL MEMBERS, AND ERECTION IN THE FIELD.
3. THE CONTRACT STRUCTURAL DRAWINGS AND SPECIFICATIONS REPRESENT THE FINISHED STRUCTURE, AND, EXCEPT WHERE SPECIFICALLY SHOWN, DO NOT INDICATE THE METHOD OR MEANS OF CONSTRUCTION. THE CONTRACTOR SHALL SUPERVISE AND DIRECT THE WORK AND SHALL BE SOLELY RESPONSIBLE FOR ALL CONSTRUCTION MEANS, METHODS, PROCEDURES, TECHNIQUES, AND SEQUENCE.
4. SLEEVES AND BLOCKOUTS REQUIRED FOR PASSAGE OF DUCTWORK, PIPING, DRAINS, CONDUIT, ETC., AND ANCHORS REQUIRED FOR ANCHORING EQUIPMENT AND PIPING ARE NOT GENERALLY INDICATED ON THE STRUCTURAL DRAWINGS. THE CONTRACTOR SHALL DETERMINE SUCH REQUIREMENTS FROM OTHER SERIES DRAWINGS, SUBCONTRACTORS, AND SUPPLIERS AND SHALL COORDINATE THE LOCATIONS AND DETAILS FOR THESE ITEMS PRIOR TO FABRICATION OR CONSTRUCTION OF THE STRUCTURE. ANY CONFLICTS BETWEEN THESE ITEMS AND THE BUILDING STRUCTURE SHALL BE BROUGHT TO THE ATTENTION OF THE ARCHITECT FOR RESOLUTION.
5. VERIFY, OR ESTABLISH, LOCATIONS AND DIMENSIONS OF ALL FRAMED OPENINGS RELATED TO EQUIPMENT OR DUCTWORK, INCLUDING INSULATION, IF ANY. WHERE SUBSTANTIAL RELOCATION OR RECONFIGURATION IS REQUIRED, SUBMIT A DRAWING TO THE ARCHITECT FOR REVIEW.
6. MATERIALS OR PRODUCTS SUBMITTED FOR APPROVAL WHICH ARE NOT AS SPECIFIED IN THE DOCUMENTS SHALL BE ACCOMPANIED BY A CURRENT ES REPORT (BY ICC EVALUATION SERVICE, INC.) OR ICBO REPORT (BY INTERNATIONAL CONFERENCE OF BUILDING OFFICIALS). MATERIALS OR PRODUCTS THAT DO NOT HAVE AN ES OR ICBO REPORT INDICATING THE SUBSTITUTED MATERIAL OR PRODUCT TO BE EQUAL TO THAT SPECIFIED, WILL NOT BE CONSIDERED.
7. IF CERTAIN FEATURES ARE NOT FULLY SHOWN OR SPECIFIED ON THE DRAWINGS OR IN THE SPECIFICATIONS, THEIR CONSTRUCTION SHALL BE OF THE SAME CHARACTER AS SHOWN OR SPECIFIED IN SIMILAR CONDITIONS.
8. THE GENERAL CONTRACTOR SHALL COMPARE THE ARCHITECTURAL AND STRUCTURAL DRAWINGS AND REPORT ANY DISCREPANCY BETWEEN EACH SET OF DRAWINGS AND WITHIN EACH SET OF DRAWINGS TO THE ARCHITECT AND ENGINEER PRIOR TO THE FABRICATION AND INSTALLATION OF ANY STRUCTURAL MEMBERS.
9. ALL HEAVILY LOADED VEHICLES, CONCRETE TRUCKS AND CRANES SHALL NOT BE DRIVEN ACROSS GRADE BEAMS OR BUILDING SLABS. THE CONTRACTOR SHALL BE RESPONSIBLE FOR ANY DAMAGES TO THE SLAB INDUCED FROM THIS TYPE OF EQUIPMENT.
10. ERECTION OF STRUCTURAL STEEL MAY NOT BEGIN UNTIL CONCRETE FOUNDATION HAS CURED FOR A MINIMUM OF THREE DAYS. STRUCTURAL STEEL OR OTHER HEAVY LOADS SHALL NOT BE STOCKPILED ON ANY SLAB UNTIL IT HAS CURED FOR A MINIMUM OF SEVEN DAYS.
11. NOTE THAT THE GROUND FLOOR SLAB IS A GROUND SUPPORTED SLAB AT GRADE AS PER THE DESIGN RECOMMENDED IN THE SOIL REPORT. IT IS NOT A STRUCTURAL SLAB AND AS SUCH IT IS NOT DESIGNED FOR ANY EXTERNAL UPWARD OR DOWNWARD LOADS, IT IS INTENDED TO BE ENTIRELY SUPPORTED BY THE PREPARED GROUND UNDER THE SLAB. THE CONTRACTOR SHOULD NOTE THAT THE PERFORMANCE OF THE SLAB AS DESIGNED AND INTENDED BY THE SOIL ENGINEER IS HIGHLY DEPENDENT ON HOW WELL THE CONTRACTOR FOLLOWS THE SITE PREPARATION INSTRUCTION IN THE SOIL REPORT.
12. ALL STRUCTURAL ELEMENTS OF THE PROJECT HAVE BEEN DESIGNED BY THE STRUCTURAL ENGINEER TO RESIST THE REQUIRED CODE VERTICAL AND LATERAL FORCES THAT COULD OCCUR IN THE FINAL COMPLETED STRUCTURE ONLY. THE ABILITY OF THE STRUCTURAL FRAME TO RESIST THE REQUIRED CODE FORCES DERIVES FROM THE COMPLETE INSTALLATION OF THE LATERAL FORCE RESISTING SYSTEMS AND DIAPHRAGMS DESCRIBED BELOW. IT IS THE RESPONSIBILITY OF THE CONTRACTOR TO PROVIDE ALL REQUIRED BRACING DURING CONSTRUCTION TO MAINTAIN THE STABILITY AND SAFETY OF ALL STRUCTURAL ELEMENTS DURING THE CONSTRUCTION PROCESS UNTIL THE LATERAL-LOAD RESISTING OR STABILITY-PROVIDING SYSTEM IS COMPLETELY INSTALLED AND ALL DESIGNATED CONCRETE ELEMENTS (IF ANY) HAVE REACHED A MINIMUM OF 75% OF THEIR DESIGN STRENGTH.
13. THE STRUCTURE HAS BEEN DESIGNED FOR THE LOADS IDENTIFIED WITHIN THESE STRUCTURAL DRAWINGS THAT ARE ANTICIPATED TO BE APPLIED TO THE FINAL STRUCTURE ONCE COMPLETED AND OCCUPIED. THE CONTRACTOR SHALL NOT OVERLOAD THE STRUCTURE DURING CONSTRUCTION. THE CONTRACTOR SHALL BE RESPONSIBLE FOR CHECKING THE ADEQUACY OF THE STRUCTURE TO SUPPORT ANY APPLIED CONSTRUCTION LOADS, INCLUDING THOSE DUE TO CONSTRUCTION VEHICLES OR EQUIPMENT, MATERIAL HANDLING OR STORAGE, SHORING OR RESHORING, OR ANY OTHER CONSTRUCTION ACTIVITY. THE CONTRACTOR SHALL SUBMIT CALCULATIONS SIGNED AND SEALED BY AN ENGINEER LICENSED IN THE STATE WHERE THE PROJECT IS LOCATED VERIFYING THE ADEQUACY OF THE STRUCTURE FOR ANY PROPOSED CONSTRUCTION LOADS THAT ARE IN EXCESS OF THE STATED DESIGN LOADS. THE STRUCTURAL ENGINEER IS NOT RESPONSIBLE TO DESIGN OR CHECK THE STRUCTURE FOR LOADS APPLIED TO THE STRUCTURE FOR ANY CONSTRUCTION ACTIVITY.

DESIGN CRITERIA:

DEAD LOADS:

1. DEAD LOADS INCLUDE THE WEIGHT OF THE STRUCTURAL COMPONENTS AND ALLOWANCES FOR PERMANENT PARTITIONS, PERMANENT FIXTURES, FINISHES, ROOFING, MECHANICAL, ELECTRICAL, PLUMBING AND FIRE PROTECTION MATERIALS SHOWN OR SPECIFIED.
2. LOADINGS FOR MECHANICAL ROOMS ARE BASED ON THE WEIGHTS OF ASSUMED EQUIPMENT,AS INDICATED ON THE MECHANICAL DRAWINGS (INCLUDING THE WEIGHT OF CONCRETE PADS, WHERE INDICATED), ANY CHANGES IN TYPE, SIZE, LOCATION OR NUMBER OF PIECES OF EQUIPMENT SHOULD BE REPORTED TO THE ARCHITECT FOR VERIFICATION OF THE ADEQUACY OF SUPPORTING MEMBERS PRIOR TO THE PLACEMENT OF SUCH EQUIPMENT.
3. DESIGN DEAD LOADING IS AS FOLLOWS:

ROOF (RIGID INSULATION BOARD)	SELF WEIGHT + 25 PSF COLLATERAL
ROOF (LIGHTWEIGHT INSULATION FILL)	SELF WEIGHT + 35 PSF COLLATERAL
FLOOR	SELF WEIGHT + 25 PSF COLLATERAL

LIVE LOADS:

1. DESIGN LIVE LOADING IS AS FOLLOWS:

ROOF	20 PSF, 300# CONCENTRATED LOAD (REDUCIBLE)
TYPICAL FLOORS	100 PSF , 1000# CONCENTRATED LOAD (REDUCIBLE)
ALL SLABS-ON-GRADE	100 PSF
MECHANICAL/ELECTRICAL ROOM (MIN)	150 PSF (UNREDUCIBLE)
ELEVATOR MACHINE ROOM	150 PSF (UNREDUCIBLE)
HANDRAILS AND GUARDRAILS	50 PLF OR 200# APPLIED AT TOP RAIL IN ANY DIRECTION
LIBRARY, COMPUTER ROOM	150 PSF (UNREDUCIBLE)
LIGHT STORAGE	150 PSF (UNREDUCIBLE)
STAGE	125 PSF (UNREDUCIBLE)
STAIRWAYS AND EXITS	100 PSF + 300# CONCENTRATED LOAD AT TREAD MIDSPAN
CATWALKS	40 PSF

SNOW LOADS:

1. DESIGN SNOW LOADING IS AS FOLLOWS:

GROUND SNOW LOAD, Pg	5.0 PSF
SNOW LOAD IMPORTANCE FACTOR	1.1
SNOW RISK CATEGORY	III
SNOW THERMAL FACTOR, Ct	1.0
SNOW EXPOSURE FACTOR, Ce	0.9
FLAT SNOW LOAD, Pf	3.5 PSF
ROOF SLOPE FACTOR, Cs	1.0
SLOPED (BALANCED) SNOW LOAD, Ps	3.5 PSF

WIND LOADS:

1. WIND PRESSURES ARE BASED ON THE PROVISIONS OF THE AMERICAN SOCIETY OF CIVIL ENGINEERS, MINIMUM DESIGN LOADS FOR BUILDINGS AND OTHER STRUCTURES, ASCE 7-16, CITY OF GALENA PARK AMENDMENTS, AND THE FOLLOWING CRITERIA:

A. WIND DESIGN DATA (USED FOR PRESSURE DETERMINATION FOR THE DESIGN OF BUILDING)

1. BASIC WIND SPEED, V	116 MPH (3-SECOND GUST) (ULTIMATE)
2. WIND OCCUPANCY CATEGORY	III
3. WIND IMPORTANCE FACTOR, I	1.0
4. WIND EXPOSURE CATEGORY	C
5. INTERNAL PRESSURE COEFFICIENT, Gcpi	+-0.18
6. WIDTH OF END ZONE, 2a	18.6 FT

B. WIND-BORNE DEBRIS DATA*** (USED TO DETERMINE IF BUILDING IS LOCATED WITHIN A WIND-BORNE DEBRIS REGION)

1. WIND-BORNE DEBRIS BASIC WIND SPEED TRIGGER, V	140 MPH (3-SECOND GUST) (ULTIMATE)
2. BASIC WIND SPEED, V	116 MPH
3. WIND OCCUPANCY CATEGORY	II
4. WIND-BORNE DEBRIS PROTECTION REQUIRED?	NO

*** - THE INFORMATION SHOWN IN WIND LOADS SECTION 1.B IS ONLY PROVIDED TO INDICATE IF THE BUILDING IS WITHIN A WIND-BORNE DEBRIS AREA. THIS SECTION DOES NOT APPLY TO ANY COMPONENTS THAT ARE LISTED AS DELEGATED DESIGN. ALL DELEGATED DESIGN COMPONENTS SHALL BE DESIGN FOR THE WIND DESIGN DATA AND DESIGN WIND PRESSURES PROVIDED IN SECTION 1.A AND 1.C.

C. DESIGN WIND PRESSURES

1. MAIN WIND-FORCE RESISTING SYSTEM (MWFRS)

I. WALLS (WW+LW)

0'-15'	34.0 PSF
15'-20'	35.2 PSF
20'-25'	36.2 PSF
25'-30'	37.0 PSF
30'-33'	38.1 PSF

2. COMPONENTS AND CLADDING

I. WALLS (AREA = 75 SF)

INTERIOR ZONE	35.2 PSF
END ZONE	39.7 PSF

II. ROOF UPLIFT (GROSS) - ROOF ATTACHMENTS (AREA = 10 SF)

INTERIOR ZONE	40.3 PSF
END ZONE	67.6 PSF
CORNER ZONE	101.8 PSF
OVERHANG INTERIOR ZONE*	58.1 PSF
OVERHANG END ZONE*	58.1 PSF
OVERHANG CORNER ZONE*	95.7 PSF

III. ROOF UPLIFT (GROSS) - JOISTS (AREA = 100 SF)

INTERIOR ZONE	36.9 PSF
END ZONE	43.7 PSF
CORNER ZONE	43.7 PSF
OVERHANG INTERIOR ZONE*	54.7 PSF
OVERHANG END ZONE*	54.7 PSF
OVERHANG CORNER ZONE*	27.3 PSF

IV. ROOF UPLIFT (GROSS) - GIRDERS (AREA > 700 SF)

0' TO 36	32.3 PSF
36 TO 72	20.7 PSF
>72	14.9 PSF
WINDWARD ROOF OVERHANGS (ADD TO WINDWARD ROOF PRESSURE)	23.2 PSF (UPWARD)

V. ROOF POSITIVE WIND PRESSURE (GROSS) - ALL ZONES

C&C AREA = 10 SF	16.4 PSF
C&C AREA = 100 SF	13.0 PSF
C&C AREA > 700 SF	13.0 PSF

* - OVERHANG PRESSURES IN THE TABLE ABOVE ASSUME AN INTERNAL PRESSURE COEFFICIENT (Gcpi) OF 0.0

SEISMIC LOADS:

1. THE STRUCTURE AND COMPONENTS OF THE BUILDING HAVE BEEN DESIGNED IN ACCORDANCE WITH AFOREMENTIONED BUILDING CODE WITH THE FOLLOWING CRITERIA:

RISK CATEGORY	III
IMPORTANCE FACTOR	1.25
MAPPED SPECTRAL RESPONSE COEFFICIENT:	Ss = 0.068g S1 = 0.039g
SITE CLASS	D
DESIGN SPECTRAL RESPONSE COEFFICIENTS:	Sds = 0.073g Sd1 = 0.063g
SEISMIC DESIGN CATEGORY	A
LATERAL SYSTEM	STRUCTURAL STEEL SYSTEM NOT SPECIFICALLY DESIGNED FOR SEISMIC RESISTANCE
BASE SHEAR	V = 0.030W
SEISMIC RESPONSE COEFFICIENT	CS = 0.030
RESPONSE MODIFICATION FACTOR	R = 3.0
ANALYSIS PROCEDURE	EQUIVALENT LATERAL FORCE PROCEDURE

ALLOWANCE NOTES:

TO ACCOUNT FOR ANY POTENTIALLY UNREALIZED CONDITIONS THE GENERAL CONTRACTOR SHALL PROVIDE THE FOLLOWING ALLOWANCES:

1. PROVIDE AN ALLOWANCE FOR AN ADDITIONAL 15 TONS OF MISCELLANEOUS STEEL. SIZES OF MEMBERS AND USE OF MEMBERS SHALL BE AS DIRECTED BY THE ARCHITECT IN THE FIELD. ALLOWANCE SHALL INCLUDE/ACCOUNT FOR ALL COSTS FOR MATERIAL, FABRICATION, DELIVERY, ERECTION, ETC. ANY UNUSED PORTION OF THE 15 TONS OF STEEL SHALL BE CREDITED BACK TO THE OWNER AT $4,800.00 / TON.
2. PROVIDE AN ALLOWANCE FOR AN ADDITIONAL 150 CUBIC YARDS OF CONCRETE. SIZE OF MEMBERS AND USE OF MEMBERS SHALL BE AS DIRECTED BY THE ARCHITECT IN THE FIELD. ALLOWANCE SHALL INCLUDE/ACCOUNT FOR ALL COSTS FOR MATERIAL, FABRICATION, DELIVERY, LABOR FOR INSTALLATION/ PLACEMENT, FORMWORK, ETC. REINFORCEMENT FOR CONCRETE SHALL ALSO BE INCLUDED AS PART OF THIS ALLOWANCE AND SHALL BE ASSUMED TO BE 2% MINIMUM BY VOLUME. ANY UNUSED PORTION OF THE 150 CUBIC YARDS SHALL BE CREDITED BACK TO THE OWNER AT $190.00 / CUBIC YARD.
3. CONTRACTOR SHALL PROVIDE IN HIS BID A UNIT PRICE ADD AND UNIT PRICE DEDUCT FOR EACH PIER SIZE UTILIZED ON THE PROJECT.
4. THE PRICE FOR CASING OF PIERS SHALL BE INCLUDED WITHIN THE BASE BID FOR ALL DRILLED (BELLED) PIERS ON THE PROJECT. CONTRACTOR SHALL PROVIDE AN ALLOWANCE FOR 100% CASING OF DRILLED PIERS. CONTRACTOR SHALL ALSO PROVIDE UNIT PRICE FOR EACH SIZE OF CASING UTILIZED ON THE PROJECT. PAYMENT FOR CASING SHALL BE BASED UPON NET LENGTH OF CASING UTILIZED MULTIPLIED BY THE UNIT PRICE.
5. THE DRAWINGS AND SPECIFICATIONS MAY NOT INDICATE OR DESCRIBE ALL OF THE WORK REQUIRED FOR THE PERFORMANCE AND COMPLETION OF THE PROJECT. REFER TO IMPORTANT FOUNDATION / CONCRETE, MASONRY / CMU, AND STEEL NOTES TO PROPOSERS FOLLOWING THIS SECTION.

MISCELLANEOUS LOADS:

1. ALL JOISTS ALONG PIPE RUN SHALL BE DESIGNED FOR SUSPENDED PIPE WEIGHT. IT'S THE GENERAL CONTRACTOR'S RESPONSIBILITY TO COORDINATE HOW OFTEN PIPES WILL BE HUNG (5'-0" OC OR 10'-0" OC) SO THAT PROPER LOADING MAY BE ACCOUNTED FOR. IT IS RECOMMENDED TO HANG FROM EACH JOIST (GC MUST COORDINATE WITH MEP CONTRACTOR TO ENSURE SAME HANGING PATTERN IS FOLLOWED):

ADDITIONAL JOIST DEAD-LOAD FOR MECHANICAL PIPE LOADS WITH WATER		
PIPE SIZE (DIAMETER)	PERPENDICULAR CONDITION	PARALLEL CONDITION
3"	110 LBS AT 10'-0"	11 PLF
4"	170 LBS AT 10'-0"	17 PLF
5"	240 LBS AT 10'-0"	24 PLF
6"	320 LBS AT 10'-0"	32 PLF
8"	510 LBS AT 10'-0"	51 PLF
10"	750 LBS AT 10'-0"	75 PLF

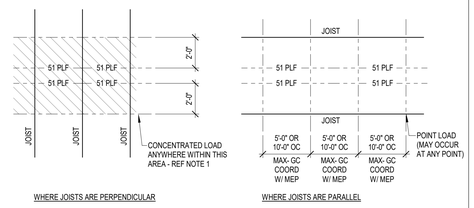

PIPE RUN JOIST LOADING

NOTE:
WHERE PIPES RUN PERPENDICULAR TO JOISTS, JOISTS THAT ARE SUPPORTING PIPES SHALL BE DESIGNED FOR ADDITIONAL CONCENTRATED DEAD LOAD AT ANY POINT ALONG JOIST SPAN WITHIN THE HATCHED AREA.

2. ARCHITECTURAL BARRIER ACT STANDARD:

ITEM	REQUIRED CAPACITY
GRAB BAR	250 POUNDS ANY DIRECTION
TUB OR SHOWER SEAT	250 POUNDS ANY DIRECTION
FASTENERS & MOUNTING DEVICES	250 POUNDS ANY DIRECTION

BUILDING MOVEMENT AND DEFLECTION:

	DEFLECTION LIMIT
A. ROOF MEMBERS	
1. LIVE LOAD MAXIMUM ALLOWABLE DEFLECTION	SPAN/360
2. TOTAL LOAD MAXIMUM ALLOWABLE DEFLECTION	SPAN/240
B. FLOOR MEMBERS	
1. LIVE LOAD MAXIMUM ALLOWABLE DEFLECTION	SPAN/360
2. TOTAL LOAD MAXIMUM ALLOWABLE DEFLECTION	SPAN/240
C. MEMBERS SUPPORTING MASONRY	
1. LIVE LOAD MAXIMUM ALLOWABLE DEFLECTION	SPAN/600 OR 3/8"
D. BUILDING FRAME	
1. MAXIMUM ALLOWABLE STORY DRIFT	HEIGHT/500 (TOTAL BUILDING HEIGHT)

IMPORTANT NOTES TO CONTRACTORS & PROPOSERS:

FOUNDATION / CONCRETE:

1. THESE DRAWINGS AND SPECIFICATIONS DO NOT NECESSARILY INDICATE ALL OF THE WORK REQUIRED FOR THE COMPLETION OF THE PROJECT. THESE DRAWINGS DO NOT NECESSARILY INDICATE ALL FOUNDATION / CONCRETE WORK WHICH MAY BE REQUIRED BASED ON THE ARCHITECTURAL DRAWINGS.

2. WHERE FOUNDATION / CONCRETE ITEMS ARE IMPLIED OR INDICATED ON THE STRUCTURAL OR ARCHITECTURAL DRAWINGS, THE CONTRACTOR SHALL BE RESPONSIBLE FOR THE FABRICATION AND INSTALLATION OF THESE ITEMS. THIS INCLUDES ANY FOUNDATION / CONCRETE ITEMS INDICATED ON THE ARCHITECTURAL DRAWINGS AND NOT SHOWN ON THE STRUCTURAL DRAWINGS AND ANY ITEMS SHOWN ON THE STRUCTURAL DRAWINGS AND NOT NOTED. PROPOSERS SHALL ASSUME FOR PROPOSAL PURPOSES ONLY THE SIZE OF THESE ITEMS ARE AS FOLLOWS:

A. GRADE BEAMS: GB2 (REFER TO GRADE BEAM SCHEDULE)
B. PILASTER OR PLINTH: PILASTER MATCHING SIZE AND REINF. PER TYPICAL PILASTER DETAILS.
C. SLAB-ON-GRADE: 5" THICK CONCRETE SLAB ON GRADE REINFORCED WITH EITHER:
- #3 BARS AT 10" OC EACH WAY ON 2 3/4" CHAIRS SPACED AT 36" OC EACH WAY, OR,
- #4 BARS AT 16" OC EACH WAY ON 2 1/2" CHAIRS SPACED AT 36" OC EACH WAY.
PLACE THE SLAB ON A 15 MIL WATER VAPOR BARRIER OVER COMPACTED SELECT FILL. REFER TO SOIL REPORT.
FOR SLAB JOINT DETAILS, REFER TO 1/S-301 AND 2/S-301.
D. STEM WALLS: 10" THICK WITH (2) LAYERS OF #5 BARS AT 12" OC EACH WAY, ONE LAYER ON EACH FACE WITH 3" CLEAR COVER.

THE CONTRACTOR SHALL SUBMIT AN RFI AND THE ENGINEER SHALL APPROVE THE SIZE OF THE MEMBER BEFORE CONSTRUCTION OR FABRICATION

3. THERE ARE NUMEROUS AREAS OF "EXTERIOR CONCRETE" THAT IS SHOWN BY STRUCTURAL. IN ALL CASES THIS CONCRETE IS INTENDED TO BE SUSPENDED WHETHER ADJACENT TO SLAB-ON-GRADE OR SUSPENDED SLAB AREAS. THE FINISH OF THIS CONCRETE SHALL FOLLOW DIRECTION FROM ARCH/CIVIL. THE SLOPE OF THESE AREAS SHALL FOLLOW ARCH/CIVIL. STRUCTURAL CANNOT DICTATE THE DIRECTION OF SLOPE OR FINISH OF THESE CONCRETE AREAS. IT IS THE GC'S SOLE RESPONSIBILITY TO COORDINATE WITH THE ARCH AND CIVIL DRAWINGS AND PROVIDE APPROPRIATE SLOPE DIRECTION, SLOPE AMOUNT, AND SURFACE FINISH TO MEET ALL REQUIREMENTS SET FOR IN ARCH AND CIVIL DRAWINGS, TYPICAL. GC SHALL ENSURE ALL STOREFRONTS, DOORS AND/OR OTHER OPENING INFILL ELEMENTS HAVE AN APPROVED WATERSTOP BELOW BETWEEN THE INFILL COMPONENT AND THE SLAB. THIS IS REQUIRED AT ALL AREAS BUT EXCEPTIONALLY CRITICAL AT THE AREAS WITH EXTERIOR STRUCTURAL SLAB.

4. UNLESS SPECIFICALLY DIRECTED OTHERWISE WITHIN THE STRUCTURAL CD'S OR SPECIFICATIONS, AT ALL SAW-CUT AND CONSTRUCTION JOINTS WITHIN CONCRETE SLABS-ON-GRADE THE GENERAL CONTRACTOR SHALL PROVIDE A SEMI-RIGID JOINT FILLER, EITHER MM80 OR EUCO 700 WITHIN EACH JOINT. THE JOINT FILLER MUST BE INSTALLED SOON AFTER CONCRETE SLAB INSTALLATION TO PREVENT SPALL AND BREAKDOWN OF THE HARD CONCRETE EDGES OF THE SAW-CUTS AND CONSTRUCTION JOINTS UNDER THE CONSTRUCTION EQUIPMENT. FOLLOW ALL MANUFACTURERS RECOMMENDATIONS FOR PROPER CLEANING AND PREP PRIOR TO INSTALL. THE FILLER MUST FILL THE FULL LENGTH AND FULL DEPTH OF THE JOINT. ONCE INSTALLED THE JOINT FILLER SHALL BE PROTECTED UNTIL THE BUILDING IS APPROVED FOR OCCUPANCY. IF THE CONTRACTOR DESIRES TO PROVIDE AN APPROVED EQUAL TO THE PRODUCTS SPECIFIED ABOVE OR WITHIN THE CONSTRUCTION DOCUMENTS THE GENERAL CONTRACTOR MUST RECEIVE WRITTEN APPROVAL FROM THE STRUCTURAL EOR PRIOR TO ASSUMING COST WITHIN BID. UNTIL SUCH APPROVAL CAN BE PROVIDED THE GENERAL CONTRACTOR SHALL ACCOUNT FOR THE COST OF THE APPROVED PRODUCTS WITHIN THE CD'S AND / OR AS NOTED ABOVE.

MASONRY / CMU:

1. THESE DRAWINGS AND SPECIFICATIONS DO NOT NECESSARILY INDICATE ALL OF THE WORK REQUIRED FOR THE COMPLETION OF THE PROJECT. THESE DRAWINGS DO NOT NECESSARILY INDICATE ALL MASONRY / CMU WORK WHICH MAY BE REQUIRED BASED ON THE ARCHITECTURAL DRAWINGS.

2. IF A CMU WALL IS INDICATED ON THE ARCHITECTURAL DRAWINGS AND NO SUPPORT MEMBERS OR NOTES HAVE BEEN INDICATED WHERE SUPPORT AND NOTES HAVE BEEN PROVIDED FOR OTHER SIMILAR CONDITIONS THE GC SHALL ASSUME A LIKE FOR LIKE SUPPORT SYSTEM FOR SIMILAR HEIGHTS OF CMU. FOR EXAMPLE: IF A FULL HEIGHT WALL IS SHOWN ON ARCHITECTURAL IT SHALL BE ASSUMED THAT THE SAME STRUCTURAL SUPPORT WILL BE PROVIDED BELOW THIS WALL AS IS SHOWN FOR ALL FULL HEIGHT WALLS, THIS WOULD INCLUDE THE SAME TYPICAL GRADE BEAM, TYPICAL PIER, AND TYPICAL CMU REINFORCEMENT.

3. U.N.O. GC SHALL ASSUME ALL INTERIOR CMU WALLS, NOT BEING USED AS STRUCTURAL SHEARWALLS, WILL BE BRACED TO THE ABOVE STRUCTURE, ROOF OR FLOOR, PER 5/S-400 AND THAT WALLS ARE REINFORCED PER 2/S-401. U.N.O. GC SHALL ASSUME ALL EXTERIOR CMU WALLS AND ALL INTERIOR CMU WALLS BEING USED AS SHEARWALLS TO BE STRUCTURALLY CLIPPED TO THE FLOOR OR ROOF ABOVE PER 8/S-402 AND THAT ALL WALLS ARE REINFORCED PER 6/S-401.

STEEL:

1. THESE DRAWINGS AND SPECIFICATIONS DO NOT NECESSARILY INDICATE ALL OF THE WORK REQUIRED FOR THE COMPLETION OF THE PROJECT. THESE DRAWINGS DO NOT NECESSARILY INDICATE ALL SECONDARY FRAMING WHICH MAY BE REQUIRED BASED ON THE ARCHITECTURAL DRAWINGS.

2. WHERE MISCELLANEOUS METAL ITEMS ARE IMPLIED OR INDICATED ON THE STRUCTURAL OR ARCHITECTURAL DRAWINGS, THE CONTRACTOR SHALL BE RESPONSIBLE FOR THE FABRICATION AND INSTALLATION OF THESE ITEMS. THIS INCLUDES ANY MISCELLANEOUS METAL ITEMS INDICATED ON THE ARCHITECTURAL DRAWINGS AND NOT SHOWN ON THE STRUCTURAL DRAWINGS AND ANY ITEMS SHOWN ON THE STRUCTURAL DRAWINGS AND NOT NOTED. PROPOSERS SHALL ASSUME FOR PROPOSAL PURPOSES ONLY THE SIZE OF THESE ITEMS ARE AS FOLLOWS:

A. ANGLES: L6X6X3/8
B. CHANNELS: C12X20.7
C. PLATES: 1/2" THICK
D. ANCHOR RODS: 1 1/2" DIAMETER X 18" LONG
E. EPOXY ANCHORS: 3/4" DIAMETER AT 48" OC MAX SPACING
F. WIDE FLANGE BEAMS: W24X55
G. WIDE FLANGE COLUMNS: W12X79
H. HSS COLUMNS: HSS8X8X1/2
I. HSS BEAMS: HSS18X6X5/8
J. VERT. BRACE: HSS8X8X3/8

THE CONTRACTOR SHALL SUBMIT AN RFI AND THE ENGINEER SHALL APPROVE THE SIZE OF THE MEMBER BEFORE CONSTRUCTION OR FABRICATION

3. PROVIDE SUPPORT FOR EDGES OF ROOF AND FLOOR DECK WHETHER SHOWN ON THE DRAWINGS OR NOT. PROVIDE CONTINUOUS SCREED ANGLE OR BENT PLATE FOR SLAB EDGES.

4. PROVIDE SHEAR STUDS AT ALL FLOOR BEAMS. BEAMS WITHOUT STUDS NOTED SHALL HAVE 3/4" DIAMETER STUDS SPACED AT 12" OC.

5. THE GENERAL CONTRACTOR AND THE ELEVATOR SUPPLIER SHALL REVIEW THE STRUCTURAL DRAWINGS FOR FLOOR TO FLOOR AND FLOOR TO ROOF HEIGHTS FOR THE REQUIRED DISTANCE BETWEEN BRACE POINTS. FOR THEIR RAIL DESIGN. PROVIDE A W18x50 MINIMUM HOIST BEAM SIZE. IF NO OTHER SIZE IS PROVIDED ON THE PLANS. BRACING REQUIREMENTS FOR THE TOP OF THE RAIL, OR INTERMEDIATE RAIL BRACE POINTS, SHALL BE COORDINATED WITH THE STRUCTURAL DRAWINGS. IF BRACING IS REQUIRED BUT NOT SHOWN, PROVIDE A MINIMUM OF HSS6x6X3/8 VERTICAL POST ATTACHED TO THE STRUCTURE WITH W6x24 BEAMS OR C6x13 CHANNELS SPANNING BETWEEN THE FRAMING MEMBERS. ALL MISCELLANEOUS STEEL MEMBERS REQUIRED TO ATTACH RAILS AT THE RAIL BRACE POINTS SHALL BE SUPPLIED BY THE ELEVATOR SUPPLIER. ELEVATOR MACHINE BEAM OR SHIVE BEAM LOADS SHALL BE COORDINATED WITH THE STRUCTURAL DRAWINGS. LOADS AND LOAD LOCATIONS VARYING FROM THE LOADS SHOWN ON THE STRUCTURAL DRAWINGS SHALL BE VERIFIED WITH THE STRUCTURAL ENGINEER OF RECORD.

THE FRAMING AND INFORMATION SHOWN ON THE STRUCTURAL DRAWINGS IS BASED ON:
ELEVATOR MODEL NO. PER SPEC. - REF ARCH/MEP SPECS/ DRAWINGS
MANUFACTURED BY PER SPEC. - REF ARCH/MEP SPECS/ DRAWINGS

IF THE ELEVATOR MANUFACTURER AND/OR MODEL NUMBER CHANGES, THE GENERAL CONTRACTOR IS RESPONSIBLE FOR COORDINATING ALL REVISIONS TO THE FOUNDATIONS AND THE FLOOR AND ROOF FRAMING AS REQUIRED DUE TO THE CHANGE IN THE ELEVATOR TYPE.

BIDDING PROCESS:

1. AFTER BIDDING AND PRIOR TO CONTRACT AWARD IT IS COMMON FOR THE GENERAL CONTRACTOR TO SUBMIT THEIR "QUALIFICATIONS AND ASSUMPTIONS", A WRITTEN STATEMENT OF QUAIFICATIONS, EXCEPTIONS, AND ASSUMPTIONS SPECIFIC TO THEIR BID AND THEIR RECOMMENDED SUBCONTRACTORS. THE QUALIFICATIONS AND ASSUMPTIONS RELATED TO THE STRUCTURAL ENGINEERING SCOPE OF WORK MUST BE SUBMITTED TO THE DESIGN TEAM AND THE STRUCTURAL EOR FOR REVIEW AND APPROVAL PRIOR TO RECOMMENDATION OF AWARD. THIS DOCUMENT SHALL BE PROVIDED TO THE STRUCTURAL ENGINEER-OF-RECORD FOR REVIEW A MINIMU

GENERAL NOTES
S-012
FOR BLUEBEAM LABELING/OCR:

0"
1"

STRUCTURAL SUBMITTALS (NO LEEDS)

SPECIFICATION SECTION	ITEM	SUBMITTAL
03 10 00	FORMWORK SHOP DRAWINGS	FOR INFORMATION ONLY/SIGNED AND SEALED
03 10 00	MANUFACTURER'S PRODUCT DATA FOR APPROVAL	FOR APPROVAL
03 10 00	CONSTRUCTION JOINT LAYOUT	FOR INFORMATION ONLY
03 11 31	VOID FORM PRODUCT DATA	FOR APPROVAL
03 20 00	STEEL REINFORCING SHOP DRAWINGS	FOR APPROVAL
03 20 00	EMBEDDED METAL ASSEMBLY SHOP DRAWINGS	FOR APPROVAL
03 20 00	MANUFACTURER'S PRODUCT INFORMATION FOR BAR SUPPORTS	FOR APPROVAL
03 20 00	MILL TEST CERTIFICATE OF STEEL REINFORCING	FOR INFORMATION ONLY
03 20 00	QUALIFICATION DATA	FOR INFORMATION ONLY
03 20 00	WELDING CERTIFICATES	FOR INFORMATION ONLY
03 25 13	GFRP REINFORCING SHOP DRAWINGS	FOR APPROVAL
03 25 13	MANUFACTURER'S PRODUCT DATA	FOR APPROVAL
03 25 13	MATERIAL TEST REPORTS	FOR INFORMATION ONLY
03 25 13	QUALIFICATION DATA	FOR INFORMATION ONLY
03 25 13	SOURCE QUALITY CONTROL PROGRAM	FOR INFORMATION ONLY
03 25 13	SOURCE QUALITY TEST REPORTS	FOR INFORMATION ONLY
03 30 00	CONCRETE MIX DESIGN	FOR APPROVAL
03 30 00	SLAB ON GRADE AND COMPOSITE SLAB CONSTRUCTION JOINT LAYOUT AND POUR SEQUENCE	FOR APPROVAL
03 30 00	MATERIAL CERTIFICATES FOR CONCRETE RELATED PRODUCTS	FOR APPROVAL
03 30 00	PRODUCT DATA	FOR INFORMATION ONLY
03 30 00	QUALIFICATION DATA	FOR INFORMATION ONLY
03 30 00	MATERIAL TEST REPORTS	FOR INFORMATION ONLY
03 30 00	FLOOR SURFACE FLATNESS	FOR INFORMATION ONLY
03 30 00	FIELD QUALITY CONTROL REPORTS	FOR INFORMATION ONLY
03 30 00	MINUTES OF PREINSTALLATION CONFERENCE	FOR INFORMATION ONLY
03 38 16	PRODUCT DATA	FOR APPROVAL
03 38 16	PT SHOP DRAWINGS	FOR APPROVAL/ SIGNED AND SEALED
03 38 16	SAMPLES	FOR APPROVAL
03 38 16	PT DESIGN CALCULATIONS	SIGNED AND SEALED
03 38 16	QUALIFICATION DATA	FOR INFORMATION ONLY
03 38 16	PRODUCT CERTIFICATES	FOR INFORMATION ONLY
03 38 16	MILL TEST REPORTS	FOR INFORMATION ONLY
03 38 16	FIELD QUALITY-CONTROL REPORTS	FOR INFORMATION ONLY
03 38 16	PROCEDURES STATEMENT	FOR INFORMATION ONLY
03 38 16	STRESSING JACK CALIBRATION	FOR INFORMATION ONLY
03 38 16	STRESSING RECORDS	FOR INFORMATION ONLY
03 52 16	LIGHTWEIGHT INSULATING CONCRETE SHOP DRAWINGS	FOR APPROVAL
03 52 16	MANUFACTURER'S PRODUCT DATA	FOR APPROVAL
03 52 16	LIGHTWEIGHT CONCRETE MIX DESIGN	FOR APPROVAL
03 52 16	PRODUCT CERTIFICATES	FOR INFORMATION ONLY
03 52 16	MATERIAL TEST REPORTS	FOR INFORMATION ONLY
03 52 16	RESEARCH EVALUATION REPORT	FOR INFORMATION ONLY
03 52 16	FIELD QUALITY CONTROL TEST	FOR INFORMATION ONLY
04 22 00	CMU WALL SHOP DRAWINGS	FOR APPROVAL
04 22 00	MIX DESIGN (MORTAR AND GROUT)	FOR APPROVAL
04 22 00	MASONRY COMPRESSIVE STRENGTH	FOR APPROVAL
04 22 00	SAMPLES FOR SELECTION AND VERIFICATION	FOR APPROVAL
04 22 00	MATERIAL CERTIFICATES	FOR INFORMATION ONLY
04 22 00	COLD/HOT WEATHER PROCEDURES	FOR INFORMATION ONLY
04 22 00	QUALIFICATION DATA	FOR INFORMATION ONLY
05 12 00	STRUCTURAL STEEL FRAMING SHOP DRAWINGS	FOR APPROVAL
05 12 00	STEEL CONNECTION CALCULATIONS	FOR INFORMATION ONLY/ SIGNED AND SEALED
05 12 00	WELDING PROCEDURE SPECIFICATION	FOR INFORMATION ONLY
05 12 00	WELDING CERTIFICATES	FOR INFORMATION ONLY
05 12 00	MILL TEST CERTIFICATE OF STRUCTURAL STEEL	FOR INFORMATION ONLY
05 12 00	PAINT COMPATIBILITY CERTIFICATE	FOR INFORMATION ONLY
05 12 00	QUALIFICATION DATA	FOR INFORMATION ONLY
05 21 00	STEEL JOIST FRAMING SHOP DRAWINGS	FOR APPROVAL
05 21 00	WELDING CERTIFICATES	FOR INFORMATION ONLY
05 21 00	MILL CERTIFICATES	FOR INFORMATION ONLY
05 21 00	ENGINEERING ANALYSIS OF SPECIAL JOISTS	FOR INFORMATION ONLY/ SIGNED AND SEALED
05 21 00	ENGINEERING ANALYSIS OF COMPOSITE JOISTS	FOR APPROVAL/ SIGNED AND SEALED
05 21 00	PRODUCT DATA	FOR INFORMATION ONLY
05 31 13	STEEL FLOOR DECK SHOP DRAWINGS	FOR APPROVAL
05 31 13	PRODUCT CERTIFICATE	FOR INFORMATION ONLY
05 31 13	PRODUCT TEST REPORT	FOR INFORMATION ONLY
05 31 23	STEEL ROOF DECK SHOP DRAWINGS	FOR APPROVAL
05 31 23	PRODUCT CERTIFICATE	FOR INFORMATION ONLY
05 31 23	PRODUCT TEST REPORT	FOR INFORMATION ONLY
05 40 00	COLD FORMED METAL STUD SHOP DRAWINGS	FOR APPROVAL
05 40 00	COLD FORMED METAL STUD CALCULATIONS	FOR INFORMATION ONLY/ SIGNED AND SEALED
05 40 00	PRODUCT TEST REPORT	FOR INFORMATION ONLY
05 40 00	RESEARCH REPORT	FOR INFORMATION ONLY
05 40 00	WELDING CERTIFICATE	FOR INFORMATION ONLY
05 50 00	METAL FABRICATION-LADDERS	FOR APPROVAL/ SIGNED AND SEALED
05 50 00	METAL FABRICATION-TOILET PARTITION SUPPORT	FOR APPROVAL/ SIGNED AND SEALED
05 50 00	METAL FABRICATION-MEDICAL EQUIPMENT SUPPORT	FOR APPROVAL/ SIGNED AND SEALED
06 10 00	PRODUCT DATA	FOR INFORMATION ONLY
06 10 00	FASTENER PATTERNS	FOR APPROVAL
06 10 00	MATERIAL CERTIFICATES	FOR INFORMATION ONLY
06 10 00	EVALUATION REPORTS	FOR INFORMATION ONLY
06 15 00	WOOD DECK PRODUCT DATA	FOR APPROVAL
06 15 00	WOOD DECK SHOP DRAWINGS	FOR APPROVAL
06 15 00	RESEARCH EVALUATION REPORTS	FOR INFORMATION ONLY
06 16 00	WOOD SHEATHING PRODUCT DATA	FOR APPROVAL
06 16 00	EVALUATION REPORTS	FOR INFORMATION ONLY
31 63 29	PIER REINFORCEMENT SHOP DRAWINGS	FOR APPROVAL
31 63 29	PIER CONCRETE MIX DESIGN	FOR APPROVAL
31 63 29	PIER DRILLING LOG	FOR INFORMATION ONLY

DELEGATED STRUCTURAL DESIGN OF COMPONENTS:

1. A STRUCTURAL COMPONENT IS AN INDIVIDUAL STRUCTURAL MEMBER DESIGNED TO BE PART OF A STRUCTURAL SYSTEM. A LIST OF STRUCTURAL COMPONENTS THAT ARE TO BE DESIGNED BY THE COMPONENT SUPPLIERS ENGINEERS IS PROVIDED IN THESE PLANS AND SPECIFICATIONS.

2. A COMPONENT'S DELEGATED ENGINEER AND RESPONSIBLE CHARGE, SHALL BE A PROFESSIONAL ENGINEER REGISTERED IN THE STATE WHERE THE PROJECT IS LOCATED.

3. ALL DRAWINGS AND CALCULATIONS FOR COMPONENTS IN QUESTION, OR THEIR ASSEMBLY INTO STRUCTURAL SYSTEMS SHALL REQUIRE THE SEAL AND SIGNATURE OF THE DELEGATED ENGINEER WHO PREPARED THEM.

4. THE DESIGN OF PRE-ENGINEERED SYSTEMS SPECIFIED IN THE CONTRACT DOCUMENTS WHICH ARE DESIGNED/ENGINEERED BY THE SYSTEM SUPPLIER IS THE SOLE RESPONSIBILITY OF THE SUPPLIER AND ITS DESIGN ENGINEER LICENSED IN THE STATE WHERE THE PROJECT IS LOCATED. SUBMITTALS OF SUCH SYSTEMS TO THE STRUCTURAL ENGINEER OF RECORD SHALL BE REVIEWED FOR CONFORMANCE WITH THE CONTRACT DOCUMENTS WITH REGARD TO THE ARRANGEMENT AND/OR SIZES OF MEMBERS SHOWN ON THE STRUCTURAL CONTRACT DOCUMENTS AND THE SUPPLIERS INTERPRETATION OF THE DESIGN INFORMATION INCLUDED IN THE CONTRACT DOCUMENTS. SUCH REVIEW BY THE STRUCTURAL ENGINEER OF RECORD SHALL NOT IMPLY ANY RESPONSIBILITY FOR THE ACTUAL DESIGN OF SUCH SYSTEMS. THE CONTRACTOR SHALL BE RESPONSIBLE FOR DIMENSIONAL ACCURACY AND CONFORMANCE WITH THE INFORMATION CONTAINED IN CONTRACT DOCUMENTS.

5. SEE APPLICABLE SECTIONS OF GENERAL NOTES AND SPECIFICATIONS FOR THE APPROPRIATE DESIGN RESPONSIBILITIES OF THE SUPPLIER AND ITS LICENSED ENGINEER.

SPECIAL INSPECTIONS:

SPECIAL INSPECTION WORK AND THE FINAL LETTER OF COMPLIANCE HAVE NOT BEEN INCLUDED IN THE STRUCTURAL ENGINEERS SCOPE OF SERVICES. THE OWNER SHALL BE RESPONSIBLE FOR OBTAINING THE SERVICES OF THE SPECIAL INSPECTOR AND THE TESTING LABORATORY. SPECIAL INSPECTIONS CAN BE PROVIDED BY AN INDEPENDENT SPECIAL INSPECTOR WHO IS APPROVED BY THE BUILDING AUTHORITY OR THE ENGINEER OF RECORD. THE SPECIAL INSPECTION WORK DOES NOT INCLUDE THE TESTING LABORATORY SERVICES AS CALLED FOR ON THE DRAWINGS. ARRANGEMENTS FOR SPECIAL INSPECTIONS SHOULD BE MADE PRIOR TO THE COMMENCEMENT OF CONSTRUCTION. THE CONTRACTOR IS RESPONSIBLE FOR NOTIFYING THE OWNER IF SPECIAL INSPECTIONS ARE REQUIRED ON THE APPROVED PERMIT DRAWINGS AND FOR NOTIFYING THE TESTING LABORATORY AND SPECIAL INSPECTOR IN A TIMELY MANNER BEFORE CONSTRUCTION OPERATIONS CONTINUE. THE CONTRACTOR SHALL NOT PROCEED WITH ANY WORK REQUIRING INSPECTIONS WITHOUT THE TESTING LABORATORY'S OR SPECIAL INSPECTOR'S PRESENCE. THE STRUCTURAL ENGINEER WILL NOT PROVIDE A FINAL LETTER OF COMPLIANCE AFTER THE WORK IS COMPLETE UNLESS HE HAS REVIEWED ALL SPECIAL INSPECTIONS/TESTING LABORATORY TEST RESULTS.

CHAPTER 17 OF THE 2009 INTERNATIONAL BUILDING CODE, INCLUDING ANY LOCAL AMENDMENTS, REQUIRES SPECIAL INSPECTION ON THE FOLLOWING ITEMS:

SOILS (SECTION 1705.6)

CONCRETE CONSTRUCTION (SECTION 1705.3)

STEEL (SECTION 1705.2)

MASONRY (SECTION 1705.4)

WOOD (SECTION 1705.5)

DRIVEN DEEP FOUNDATIONS (SECTION 1705.7)

CAST-IN-PLACE FOUNDATIONS (SECTION1705.8)

FABRICATED ITEMS (SECTION 1705.10)

SPECIAL INSPECTIONS FOR WIND RESISTANCE (SECTION 1705.11)

SPECIAL INSPECTIONS FOR SEISMIC RESISTANCE (SECTION 1705.12)

TESTING FOR SEISMIC RESISTANCE (SECTION 1705.13)

SHOP DRAWINGS:

1. SHOP DRAWINGS ARE AN AID FOR FIELD PLACEMENT AND ARE SUPERSEDED BY THE STRUCTURAL DRAWINGS. THE STRUCTURAL DRAWINGS ARE NOT TO BE VIEWED AS DETAILED SHOP OR ERECTION DRAWINGS. VARIOUS DIMENSIONS REQUIRED FOR PROPER FIT-UP OF THE COMPONENTS OF THE STRUCTURE SHALL BE DETERMINED FROM THE INFORMATION THAT IS PROVIDED ELSEWHERE IN THE CONTRACT DOCUMENTS. THE CONTRACTOR SHALL ESTABLISH, CALCULATE AND VERIFY THESE DIMENSIONS AS REQUIRED TO ACHIEVE PROPER FIT-UP OF MATERIALS AND TO ACHIEVE COMPLIANCE WITH THE REQUIREMENTS OF THE CONTRACT DOCUMENTS. THE CONTRACTOR SHALL MAKE CERTAIN THAT ALL CONSTRUCTION IS IN FULL AGREEMENT WITH THE LATEST STRUCTURAL DRAWINGS.

2. THE CONTRACTOR SHALL REVIEW ALL SUBMITTALS FOR COMPLIANCE WITH THE CONTRACT DOCUMENTS AND SHALL CERTIFY THE REVIEW BY A STAMP NOTING THAT THE SUBMITTAL HAS BEEN "APPROVED" AND WHICH BEARS THE SIGNATURE OF AN AUTHORIZED REPRESENTATIVE OF THE CONTRACTOR AND THE DATE. SUBMITTALS WHICH DO NOT REFLECT THE CONTRACTOR'S APPROVAL, SIGNATURE AND DATE; OR DO NOT APPEAR TO HAVE BEEN REVIEWED BY THE CONTRACTOR, WILL BE RETURNED WITHOUT REVIEW.

3. THE REVIEW OF SUBMITTALS BY THE ENGINEER IS ONLY FOR GENERAL CONFORMANCE WITH THE DESIGN CONCEPT AND THE INFORMATION GIVEN IN THE STRUCTURAL CONTRACT DOCUMENTS. CORRECTIONS OR COMMENTS MADE ON SUBMITTALS DURING THIS REVIEW DO NOT RELIEVE THE CONTRACTOR FROM COMPLIANCE WITH THE REQUIREMENTS OF THE PLANS, GENERAL NOTES OR SPECIFICATIONS. APPROVAL OF A SPECIFIC ITEM SHALL NOT INCLUDE APPROVAL OF AN ASSEMBLY OF WHICH THE ITEM IS A COMPONENT. THE CONTRACTOR IS RESPONSIBLE FOR DIMENSIONS TO BE CONFIRMED AND CORRELATED AT THE JOBSITE; INFORMATION THAT PERTAINS SOLELY TO THE FABRICATION PROCESSES OR TO THE MEANS, METHODS, TECHNIQUES, SEQUENCES AND PROCEDURES OF CONSTRUCTION; COORDINATION OF THE WORK WITH THAT OF ALL OTHER TRADES AND PERFORMING ALL WORK IN A SAFE AND SATISFACTORY MANNER.

4. SIGNED AND SEALED CALCULATIONS FOR A PARTICULAR SYSTEM SUBMITTED AS PART OF A SHOP DRAWING ARE REVIEWED FOR LOAD CRITERIA AND GENERAL CONFORMANCE WITH THE CONTRACT DOCUMENTS. CALCULATION REVIEW AND COMMENTS DO NOT INFER A DETAILED CHECK OF THE CALCULATIONS, NOR DO THEY RELIEVE THE SYSTEM ENGINEER OR THE CONTRACTOR OF RESPONSIBILITY.

5. THE USE OF REPRODUCTIONS OR ELECTRONIC FILES OF THE STRUCTURAL DRAWINGS FOR THE PREPARATION OF SHOP DRAWINGS IS NOT ACCEPTABLE WITHOUT PRIOR WRITTEN AUTHORIZATION OF THE ENGINEER OF RECORD. ALTERATION OF A SEALED DOCUMENTS WITHOUT PROPER NOTIFICATION OF THE RESPONSIBLE ENGINEER IS AN OFFENSE OF THE ENGINEERING PRACTICE ACT.

   a. IF SUCH AUTHORIZATION IS OBTAINED, DO NOT SUBMIT SHOP DRAWINGS WITH THE CONTRACT DOCUMENT TITLE BLOCK AND/OR THE SEAL OF THE REGISTERED ENGINEER OF RECORD AFFIXED.

   b. COSTS FOR PREPARATION OF STRUCTURAL SHOP DRAWINGS SHALL BE INCLUDED IN THE BID PRICE ASSUMING THAT REPRODUCTIONS OR ELECTRONIC FILES OF THE STRUCTURAL DRAWINGS WILL NOT BE AVAILABLE.

6. OMISSION FROM THE SHOP DRAWINGS OF ANY REQUIREMENTS OF THE CONTRACT DOCUMENTS SHALL NOT RELIEVE THE CONTRACTOR OF THE RESPONSIBILITY OF COMPLYING WITH THE OMITTED REQUIREMENTS, EVEN IF THE SHOP DRAWINGS HAVE BEEN REVIEWED AND RETURNED.

7. THE ARCHITECT/ENGINEER SHALL NOT BE RESPONSIBLE FOR DELAYS CAUSED BY REJECTION OF INADEQUATE OR INCORRECT SHOP DRAWINGS, AND THIS RESPONSIBILITY SHALL LIE SOLELY WITH THE CONTRACTOR.

8. SHOP DRAWINGS THAT ARE NOT SPECIFICALLY REQUIRED BY THE GENERAL NOTES OR SPECIFICATIONS WILL NOT BE REVIEWED OR RETURNED.

9. COMPLY WITH THE SUBMITTAL PROCEDURES ESTABLISHED IN OTHER PARTS OF THE CONTRACT DOCUMENTS. AS A MINIMUM, PREPARE AND SUBMIT A STRUCTURAL SUBMITTAL SCHEDULE IN CHRONOLOGICAL ORDER OF SUBMITTALS PRIOR TO THE BEGINNING OF THE STRUCTURAL SUBMITTAL PROCESS.

Kubala ENGINEERS
Ph: (900)246-3074
www.kubalaengineers.com
TX. REG. NO. F-23612

PBK
www.pbk.com
TX FIRM: BR 1608
HOUSTON, TX
713-965-0608

PKG 3A GPHS - Fieldhouse

1000 Keene St,
Galena Park, TX 77547

CLIENT PROJECT NO: 240539

ISSUE FOR PROPOSAL

KEY PLAN

NORTH: PLAN TRUE

STATE OF TEXAS
JOHN R. KUBALA
106120
06/10/2025
Kubala Engineers
F-23612

CLIENT	
Galena Park ISD	
DATE 06/10/2025	PROJECT NUMBER 240539

DRAWING HISTORY

No.	Description	Date

CHECKED BY: SI

DRAWN BY: CML

GENERAL NOTES

S-012

Plot Stamp:
6/9/2025 5:32:15 PM

GENERAL SUBGRADE NOTES AND TYP DETAILS
S-013
FOR BLUEBEAM LABELING/OCR:

0"
1"

GENERAL FOUNDATION NOTES:

1. THE FOUNDATION DESIGN AND SUBSURFACE INFORMATION IS BASED ON THE GEOTECHNICAL INVESTIGATION REPORT AS FOLLOWS:
   GEOTECHNICAL CONSULTANT: UES PROFESSIONAL SOLUTIONS 44, LLC
   GEOTECHNICAL REPORT NUMBER: H251673-1-DRAFT
   GEOTECHNICAL REPORT LOCATION: GALENA PARK, TEXAS
   DATE OF REPORT: APRIL, 25, 2025
2. ALL RECOMMENDATIONS THEREIN THAT RELATE TO THE WORK SHOWN ON THESE DRAWINGS SHALL BE USED. FOR ANY CONFLICTS BETWEEN THE GEOTECHNICAL REPORT AND THESE DRAWINGS, THE GC SHALL ISSUE A REQUEST FOR INFORMATION/CLARIFICATION.
3. GEOTECHNICAL REPORT IS AVAILABLE TO THE GENERAL CONTRACTOR UPON REQUEST TO THE OWNER. THE INFORMATION INCLUDED THEREIN MAY BE USED BY THE GENERAL CONTRACTOR FOR HIS GENERAL INFORMATION ONLY. THE ARCHITECT AND ENGINEER WILL NOT BE RESPONSIBLE FOR THE ACCURACY OR APPLICABILITY OF SUCH DATA THEREIN.
4. PREPARED GRADE AREA UNDER ALL BUILDING SLABS AND GRADE BEAMS SHALL BE COVERED WITH A 15 MIL WATER VAPOR BARRIER MEETING THE REQUIREMENTS OF ASTM E 1745 (LATEST EDITION), CLASS A OR BETTER WITH MAXIMUM WATER PERMEANCE OF 0.01 PERMS WHEN TESTED IN ACCORDANCE WITH ASTM E96. THE BARRIER/BARRIER/MEMBRANE SHALL BE INSTALLED AND LAPPED IN ACCORDANCE WITH THE REQUIREMENTS OF ASTM E1643 (LATEST EDITION). PENETRATIONS SHALL BE SEALED IN STRICT ACCORDANCE WITH THE MANUFACTURER'S RECOMMENDATIONS AND REQUIREMENTS.
5. WHERE VOID FORMS ARE REQUIRED, THESE FORMS SHALL BE CAPABLE OF SUPPORTING THE WEIGHT OF THE WET CONCRETE AND REINFORCEMENT. AFTER PLACEMENT ON THE SUBGRADE, THE FORMS SHALL BE TAPED AT ALL JOINTS. 1/8" THICK HARDBOARD SHALL BE LAID OVER THE TOP OF THE VOID FORMS PRIOR TO PLACEMENT OF THE REINFORCEMENT, AT LARGE AREAS AS REQUIRED. VOID FORMS SHALL BE SECURED TO THE SUBGRADE PER MANUFACTURER'S RECOMMENDATIONS. VOID FORMS SHALL BE WAX COATED FOR MOISTURE PROTECTION, RECTANGULAR IN PROFILE, AND EQUAL TO THE WIDTH OF THE ADJACENT GRADE BEAM. SOIL RETAINERS ARE REQUIRED, GRADE BEAMS TO BE FORMED EACH SIDE.

EARTHWORK STRUCTURAL TESTING AND INSPECTIONS:

1. UNLESS NOTED OTHERWISE BY THE OWNER OR ARCHITECT, THE GENERAL CONTRACTOR SHALL NOTIFY THE GEOTECHNICAL ENGINEER OR OTHER AUTHORIZED INSPECTOR DURING EARTHWORK OPERATIONS, AND KEEP A COMPETENT TRAINED TECHNICIAN ASSIGNED TO THE PROJECT ON SITE DURING OPERATIONS. SERVICES PROVIDED SHALL INCLUDE:
   a. OBSERVE STRIPPING OPERATIONS AND EVALUATE THE REQUIRED STRIPPING DEPTH DURING THESE OPERATIONS.
   b. OBSERVE PROOFROLLING OPERATIONS AFTER SITE STRIPPING AND DETERMINE IF ANY SOFT SPOTS NEED TO BE UNDERCUT TO FIRM SOILS, REPLACED WITH SELECT FILL AND RECOMPACTED.
   c. VERIFY THAT THE SUBGRADE IS SCARIFIED, MOISTURE CONDITIONED, AND LIME STABILIZED (IF REQUIRED) PER SUBGRADE PREPARATION.
   d. THE SELECT FILL PAD MATERIAL SHALL BE TESTED FOR ACCEPTABILITY AND A MOISTURE DENSITY CURVE SHALL BE ESTABLISHED. SELECT FILL MATERIAL SHALL BE AS INDICATED ON SUBGRADE PREPARATION.
   e. VERIFY THAT THE SELECT FILL IS PLACED IN EIGHT INCH LOOSE LIFTS AND COMPACTED PER SUBGRADE PREPARATION.
   f. SELECT FILL MATERIAL SHALL BE TESTED DURING PLACEMENT OF EACH LIFT FOR THE ATTERBERG LIMITS IN ACCORDANCE WITH ASTM D4318-98 METHOD B "STANDARD TEST METHOD FOR LIQUID LIMIT, PLASTIC LIMIT AND PLASTICITY INDEX OF SOILS" TO VERIFY THAT THE SELECT FILL MATERIAL IS IN ACCORDANCE WITH THE ORIGINALLY APPROVED SELECT FILL MATERIAL. PROVIDE TESTS PER SUBGRADE PREPARATION.
   g. PROVIDE FIELD MOISTURE TESTS FOR THE FULL DEPTH OF THE PAD PER SUBGRADE PREPARATION.
   h. OBSERVE THE EXCAVATION DAILY AND ENSURE THAT THE CONTRACTOR MAINTAINS A CLEAN EXCAVATION THAT IS FREE OF WATER 100% OF THE TIME. CONTRACTOR SHALL PROVIDE PUMPS AS REQUIRED TO REMOVE WATER AT ALL TIMES.
   i. OBSERVE GRADING OPERATIONS TO ENSURE THAT PROPER DRAINAGE AWAY FROM THE BUILDING PAD IS PROVIDED.

SUBGRADE PREPARATION:

1. THE CONTRACTOR SHALL READ THE GEOTECHNICAL REPORT AND BE THOROUGHLY FAMILIAR WITH SITE AND SUBGRADE INFORMATION GIVEN THEREIN. ALL SUBGRADE PREPARATION, FILL, FILL PLACEMENT, AND FOUNDATION CONSTRUCTION SHALL BE PERFORMED IN STRICT COMPLIANCE WITH THE STRUCTURAL DOCUMENTS AND THE GEOTECHNICAL REPORT, AND SHALL BE OBSERVED, TESTED, AND APPROVED BY THE PROJECT'S GEOTECHNICAL-ENGINEER-OF-RECORD (GER) PRIOR TO PROCEEDING WITH FOUNDATION CONSTRUCTION.
2. SITE PREPARATION FOR THE BUILDING PAD SHALL CONSIST OF THE REMOVAL OF EXISTING PAVEMENT, TOPSOIL, VEGETATION, ORGANIC MATTER, AND OTHER DEBRIS/UNSUITABLE SURFACE MATERIAL AS NECESSARY TO PROVIDE THE REQUIRED AMOUNT OF FILL UNDER THE BUILDING AND EXTENDING OUT BEYOND THE PERIMETER OF THE BUILDING AS SHOWN IN THE SITE PREPARATION DETAIL. PROPER SITE DRAINAGE SHOULD BE MAINTAINED DURING CONSTRUCTION SO THAT PONDING OF SURFACE RUNOFF DOES NOT OCCUR AND CAUSE CONSTRUCTION DELAYS AND/OR INHIBIT SITE ACCESS.
3. THE SUBGRADE SHALL BE PROOFROLLED WITH A HEAVY, RUBBER-TIRED VEHICLE (STATIC WEIGHT OF AT LEAST 20 TONS AND WITH TIRE PRESSURES OF AT LEAST 90 PSI). THE CONTRACTOR SHALL MAKE AT LEAST TWO COMPLETE PASSES OVER THE AREA WITH THE SECOND PASS PERPENDICULAR TO THE FIRST PASS. AREAS OF THE SUBGRADE THAT ARE OBSERVED TO BE SOFT OR WEAK SHALL BE OVEREXCAVATED AND REPLACED WITH PROPERLY COMPACTED SOILS EXHIBITING SIMILAR CLASSIFICATION, MOISTURE CONTENT, AND DENSITY AS THE ADJACENT IN-SITU SOILS. PROOFROLLING SHOULD BE PERFORMED UNDER THE DIRECT OBSERVATION OF THE GEOTECHNICAL ENGINEER OR HIS/HER REPRESENTATIVE.
4. PREPARE THE BUILDING SUBGRADE SOILS IN DIRECT ACCORDANCE WITH THE RECOMMENDATIONS LISTED IN THE "EARTHWORK" AND "FLOOR SLABS" SECTIONS OF THE GEOTECHNICAL REPORT. SUBGRADE SHALL BE SCARIFIED AND MOISTURE CONDITIONED TO A DEPTH OF SIX (6) INCHES AND THEN RECOMPACTED TO BETWEEN 95 AND 100 PERCENT OF THE MAXIMUM DRY DENSITY AS DETERMINED BY THE STANDARD PROCTOR DENSITY TEST (ASTM D698). THE MOISTURE CONTENT SHALL BE BETWEEN OPTIMUM AND +4 PERCENT OF THE OPTIMUM MOISTURE CONTENT. PROVIDE A MINIMUM OF FOUR (4) FIELD DENSITY TESTS PER LIFT OR ONE (1) FOR EVERY 2,500 SQUARE FEET WHICHEVER IS GREATER. IF WET WEATHER CONDITIONS ARE ENCOUNTERED AND WILL NOT ALLOW FOR ADEQUATE SUBGRADE COMPACTION EFFORTS, THEN THE SUBGRADE SHALL BE LIME STABILIZED WITH 6 TO 8 PERCENT BY VOLUME HYDRATED LIME IN ACCORDANCE WITH THE LIME ASSOCIATION RECOMMENDATIONS. THE OPTIMUM LIME CONTENT SHALL BE DETERMINED AT THE TIME OF CONSTRUCTION BY A LIME SERIES TEST TO DETERMINE THE REQUIRED OPTIMUM LIME CONTENT NECESSARY TO ACHIEVE A pH OF 12.4 WHILE ACHIEVING A PLASTICITY INDEX OF LESS THAN 20. PRIOR TO PROCEEDING WITH THE SELECT FILL PLACEMENT, THE LIME STABILIZED SUBGRADE SHALL BE TESTED AND APPROVED BY THE TESTING LABORATORY.
5. THE FINAL BUILDING PAD SHALL BE TESTED AND APPROVED BY THE PROJECT'S GER PRIOR TO INSTALLATION OF ANY FOUNDATION AND/OR SLAB-ON-GRADE RELATED CONSTRUCTION. IF THE BUILDING PAD HAS BEEN INSTALLED MORE THAN TWO MONTHS PRIOR TO THE PLACEMENT OF THE VAPOR BARRIER, PROVIDE FIELD MOISTURE TESTS FOR THE FULL DEPTH OF THE PAD 96 HOURS PRIOR TO PLACEMENT OF THE WATER VAPOR BARRIER TO ENSURE THAT THE FILL MOISTURE CONTENT HAS BEEN MAINTAINED PRIOR TO CONCRETE PLACEMENT. MOISTURE CONTENTS SHALL BE TAKEN AT 12 INCH VERTICAL INTERVALS WITH A MINIMUM OF TWO TESTS PER BORING AT A RATE OF ONE (1) BORING FOR EVERY 2,500 SQUARE FEET OF PAD WITH A MAXIMUM OF TEN (10). IF THE PAD TESTS SHOW MOISTURE CONTENT OUT OF THE SPECIFIED RANGES, THE TOP SIX (6) INCHES TO ONE FOOT OF MATERIAL SHALL BE REWORKED, MOISTURE CONDITIONED AND RECOMPACTED TO BETWEEN 95 AND 100 PERCENT OF THE MAXIMUM DRY DENSITY AS DETERMINED BY THE STANDARD PROCTOR DENSITY TEST (ASTM D698). THE MOISTURE CONTENT SHALL BE BETWEEN OPTIMUM AND +2 PERCENT OF THE OPTIMUM MOISTURE CONTENT FOR SELECT FILL.
6. CONTRACTOR SHALL MAINTAIN A CLEAN EXCAVATION THAT IS FREE OF WATER 100% OF THE TIME. CONTRACTOR SHALL PROVIDE PUMPS AS REQUIRED TO REMOVE ANY WATER AT ALL TIMES.
7. BACKFILL AGAINST THE OUTSIDE FACE OF THE GRADE BEAMS SHOULD CONSIST OF SELECT FILL USED TO PREPARE THE BUILDING PAD. THE SELECT FILL SHOULD BE UNIFORMLY COMPACTED TO AT LEAST 95 PERCENT OF THE STANDARD EFFORT (ASTM D 698) MAXIMUM DRY DENSITY AT A MOISTURE CONTENT WITHIN 2 PERCENT OF OPTIMUM MOISTURE CONTENT.
8. A MINIMUM OF X/X FT OF SELECT FILL MATERIAL IS REQUIRED UNDER THE FLOOR SLAB, AND SHALL EXTEND A MINIMUM OF 10'-0" BEYOND THE BUILDING PERIMETER. THE FINAL EXTERIOR GRADE ADJACENT TO THE STRUCTURE SHOULD BE SLOPED TO PROMOTE EFFECTIVE DRAINAGE AWAY FROM THE STRUCTURE.
9. EXERCISE CARE IN PLACEMENT AND COMPACTION OF FILL IN ALL LEAVE-OUTS. ALL FILL SHALL BE PLACED IN LOOSE LIFTS AND COMPACTED AT ELEVATED MOISTURE CONTENT AS DETAILED IN THE PROJECT'S GEOTECHNICAL REPORT. ANY REINFORCING SHALL BE APPROPRIATELY MANIPULATED TO ENSURE PROPER COMPACTION. VAPOR BARRIER SHALL BE SUITABLY PLACED AND LAPPED.

SITE DRAINAGE:

1. THE SITE SHALL BE GRADED TO PROVIDE POSITIVE DRAINAGE AWAY FROM ALL BUILDINGS AND SLABS. WATER SHALL NOT BE ALLOWED TO POND ADJACENT TO THE FOUNDATION.
2. WATER FROM ROOF DRAINS AND DOWNSPOUTS SHALL BE COLLECTED AND PIPED AWAY FROM THE BUILDING.
3. TREES AND VEGETATION SHALL NOT BE ALLOWED WITHIN A DISTANCE EQUAL TO THREE QUARTERS THEIR ULTIMATE HEIGHT AWAY FROM THE BUILDING.

NOTES:

1. PIPES OR CONDUITS SHALL BE PLACED IN THE SELECT FILL MATERIAL. ALL PENETRATIONS TO THE VAPOR BARRIER SHALL BE SEALED PER THE MANUFACTURER'S RECOMMENDATIONS
2. BACKFILL DIRECTLY AROUND PIPE SHALL BE CEMENT STABILIZED SAND (1-SACK MIX). THE REMAINDER OF THE TRENCH INFILL MAY BE SELECT FILL ONLY IF IT CAN BE COMPACTED AND TESTED BY THE TESTING LAB; OTHERWISE, THE GC SHALL USE CEMENT STABILIZED SAND

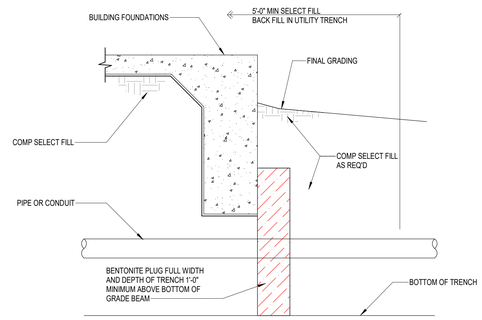

1 PIPE/CONDUIT ENTRY DETAIL
NO SCALE

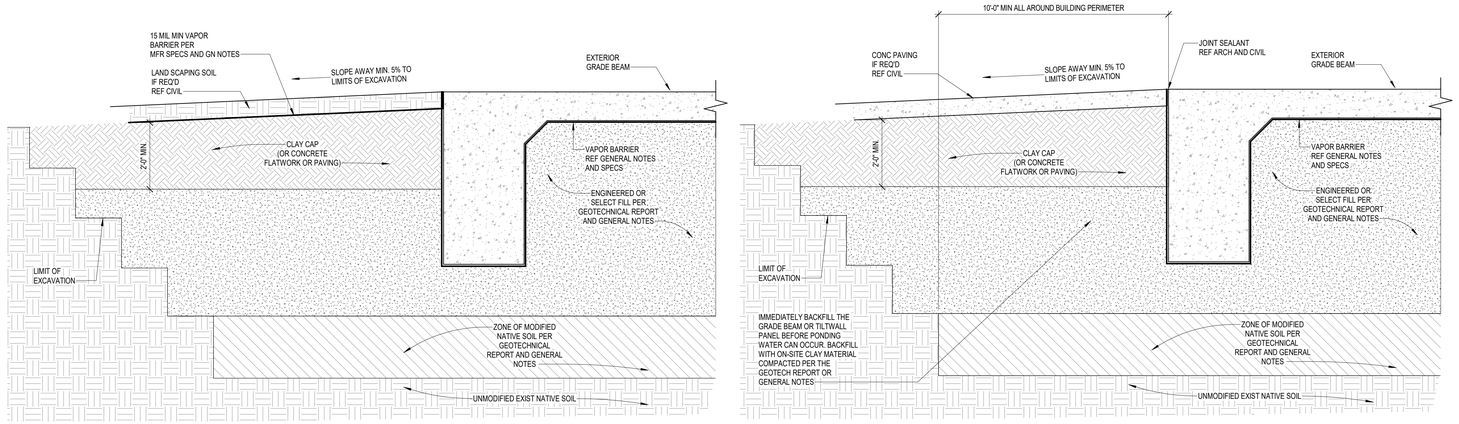

SITE NOTES:

1. ROOF RUNOFF AND SURFACE DRAINAGE SHALL BE COLLECTED AND DISCHARGED AWAY FROM THE STRUCTURES TO PREVENT WETTING OF THE FOUNDATION SOILS. ROOF GUTTERS SHALL BE INSTALLED AND CONNECTED TO DOWNSPOUTS AND PIPES DIRECTING ROOF RUNOFF AT LEAST 10 FEET AWAY FROM THE BUILDINGS, OR DISCHARGED ON TO POSITIVELY SLOPED IMPERVIOUS FLATWORK SUCH AS SIDEWALKS AND /OR PAVING AREAS.
2. SPRINKLER MAINS AND SPRAY HEADS SHALL BE LOCATED AT LEAST 5 FEET AWAY FROM THE BUILDING SUCH THAT THEY CANNOT BECOME A POTENTIAL POINT SOURCE OF WATER DIRECTLY ADJACENT TO THE BUILDING. WATERING OF VEGETATION SHALL BE PERFORMED IN A TIMELY AND CONTROLLED MANNER AND PROLONGED WATERING SHALL BE AVOIDED. LANDSCAPED IRRIGATION ADJACENT TO THE FOUNDATION STRUCTURE SHALL BE MINIMIZED OR ELIMINATED. SPECIAL CARE SHALL BE TAKEN SUCH THAT UNDERGROUND UTILITIES DO NOT DEVELOP LEAKS WITH TIME.

3 TYPICAL EXTERIOR GB BACKFILL DETAIL
NO SCALE

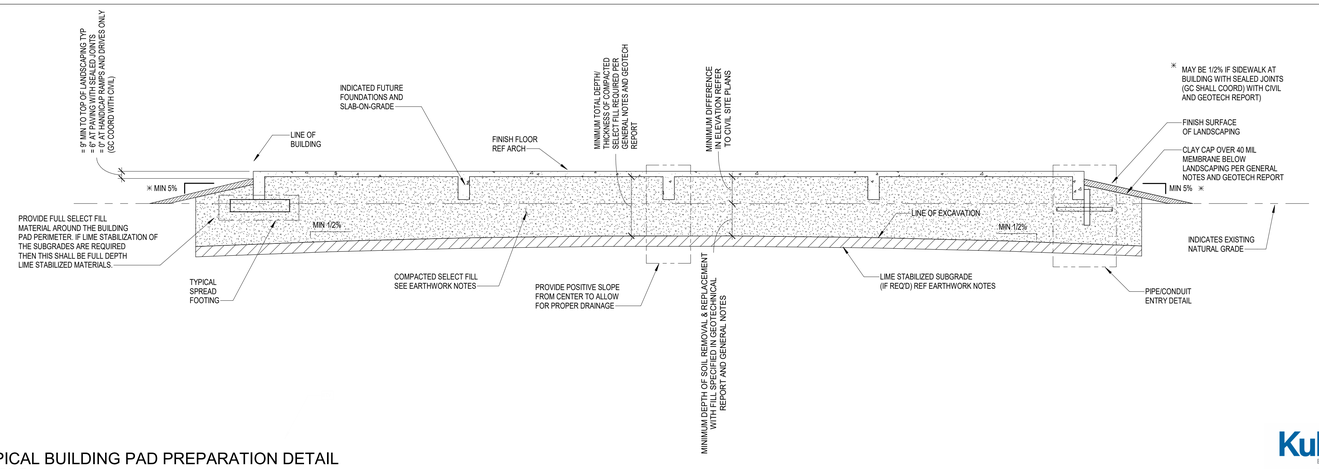

4 TYPICAL BUILDING PAD PREPARATION DETAIL
NO SCALE

Kubala ENGINEERS
Ph.: (800)246-3674
www.kubalaengineers.com
TX. REG. NO. F-23612

PBK
www.pbk.com
TX FIRM: BR 1608
HOUSTON, TX
713-365-0608

PKG 3A GPHS - Fieldhouse

1000 Keene St.
Galena Park, TX 77547

CLIENT PROJECT NO: 240539

ISSUE FOR PROPOSAL

Galena Park ISD

KEY PLAN
NORTH: PLAN TRUE

STATE OF TEXAS
JOHN R. KUBALA
106120
06/10/2025
Kubala Engineers
F-23612

CLIENT	
Galena Park ISD	
DATE 06/10/2025	PROJECT NUMBER 240539

DRAWING HISTORY

No.	Description	Date

CHECKED BY: SI
DRAWN BY: CML

GENERAL SUBGRADE NOTES AND TYP DETAILS

S-013

Plot Stamp:
6/9/2025 5:32:15 PM

FOUNDATION PLAN
S-101
FOR BLUEBEAM LABEL INDOOR:

0"
1"

FOUNDATION PLAN NOTES

1. REFER TO PLAN FOR TOP OF STRUCTURAL CONCRETE ELEVATIONS (TOSC EL). ALL ELEVATIONS SHOWN ON THE PLAN ARE BASED ON A LEVEL ONE REFERENCE ELEVATION = 0'-0". THIS REFERENCE ELEVATION IS EQUIVALENT TO THE LEVEL ONE MEAN SEA LEVEL ELEVATION = REF CIVIL SHOWN IN THE CIVIL AND ARCHITECTURAL DRAWINGS AND IS NOT INTENDED TO ESTABLISH THE ACTUAL SEA LEVEL ELEVATION OF ANY PORTION OF THE STRUCTURE.

2.1. 5" THICK CONCRETE SLAB ON GRADE REINFORCED WITH #3@9" OC EACH WAY OR #4@14" OC EACH WAY, ON 2 3/4" CHAIRS FOR #3 BARS, 2 1/2" CHAIRS FOR #4 BARS SPACED AT 36" OC EACH WAY. PLACE THE SLAB ON 15 MIL WATER VAPOR BARRIER OVER COMPACTED SELECT FILL (SOIL REPORT) FOR SLAB JOINT DETAILS REFER TO 1/S-301 AND 2/S-301.

2.2. 6" THICK CONCRETE SLAB ON GRADE REINFORCED WITH #4@14" OC EACH WAY, ON 3 1/2" CHAIRS FOR #4 BARS SPACED AT 36" OC EACH WAY. PLACE THE SLAB ON 15 MIL WATER VAPOR BARRIER OVER COMPACTED SELECT FILL (SOIL REPORT) FOR SLAB JOINT DETAILS REFER TO 1/S-301 AND 2/S-301.

2.3. 10" THICK CONCRETE SLAB ON GRADE REINFORCED WITH #4@12" OC EACH WAY, TOP & BOTTOM ON 3" CHAIRS FOR BOTTOM LAYER, TOP AS REQ'D, SPACED AT 36" OC EACH WAY. PLACE THE SLAB ON 15 MIL WATER VAPOR BARRIER OVER COMPACTED SELECT FILL (SOIL REPORT) FOR SLAB JOINT DETAILS REFER TO 1/S-301 AND 2/S-301.

2.4. 5 1/2" THICK CONCRETE SLAB ON GRADE AT THE POLISHED CONC AREAS REINFORCED WITH #3@10" OC EACH WAY ON 3 1/4" CHAIRS FOR #3 BARS SPACED AT 36" OC EACH WAY. PLACE THE SLAB ON 15 MIL WATER VAPOR BARRIER OVER COMPACTED SELECT FILL (SOIL REPORT) FOR SLAB JOINT DETAILS REFER TO 1/S-301 AND 2/S-301.

3.1. TOP OF INTERIOR GRADE BEAM ELEVATION SHALL BE = -1'-0" UON.
TOP OF PERIMETER GRADE BEAM ELEVATION SHALL BE = -1'-0" UON.

3.2. TOP OF INTERIOR/ EXTERIOR PLINTH ELEVATION SHALL BE = -1'-0" UON.
TOP OF INTERIOR PIER ELEVATION WITHOUT PLINTH SHALL BE = -1'-0" UON.
TOP OF INTERIOR PIER ELEVATION WITH PLINTH SHALL BE = -3'-6" UON.
TOP OF INTERIOR PIER ELEVATION WITH GRADE BEAM SHALL BE = -3'-6" UON.
TOP OF EXTERIOR PIER ELEVATION SHALL BE = -3'-6" UON.

4. REFER TO ARCHITECTURAL DRAWINGS FOR EXTENTS AND DIMENSIONS OF RAISED OR DEPRESSED SLAB AREAS, SLOPES, CURBS, AND DRAINS. REFER TO TYPICAL DETAILS FOR REINFORCEMENT REQUIREMENTS.

5. GC COORDINATE ALL PENETRATIONS AND UNDERGROUND UTILITIES WITH MECHANICAL, ELECTRICAL, AND PLUMBING DRAWINGS. REFER TO TYPICAL DETAILS FOR ADDITIONAL REINFORCEMENT REQUIREMENTS.

6. CONTRACTOR TO FIELD VERIFY ALL EXISTING CONDITIONS AND DIMENSIONS. NOTIFY ARCHITECT AND STRUCTURAL ENGINEER OF ANY DISCREPANCIES.

7. GC COORDINATE ALL SLAB EDGE DIMENSIONS WITH ARCHITECTURAL DRAWINGS PRIOR TO CONSTRUCTION.

8. PROVIDE (2) - #5 x 5'-0" LONG BAR IN SLAB AT RE-ENTRANT CORNERS TYPICAL, INCLUDING RE-ENTRANT CORNERS AROUND THE PERIMETER OF THE BUILDINGS, FLOOR RECESSES AND OPENINGS.

9. GC COORDINATE ALL THE SIZE AND EXTENT OF ALL BRICK LEDGES SHOWN ON PLAN OR DETAILS WITH ARCHITECTURAL DRAWINGS.

10. REF S0.xx SERIES DRAWINGS FOR GENERAL NOTES AND TYP DETAILS

11. REF S3.xx SERIES DRAWINGS FOR FOUNDATION AND SLAB-ON-GRADE DETAILS.

12. REF S4.xx SERIES DRAWINGS FOR CMU DETAILS.

13. REF S5.xx SERIES DRAWINGS FOR STEEL DETAILS.

14. REF S6.xx SERIES DRAWINGS FOR STEEL BRACE ELEVATIONS AND DETAILS.

15. REFER TO ARCH AND PLUMBING DRAWINGS FOR THE SIZE, NUMBER AND LOCATION OF ALL THE TRENCHES, AND FLOOR DRAINS. REF 10/S-301 FOR TRENCH DETAIL AND REF 4/S-301 FOR FLOOR DRAIN DETAIL.

16. AT INTERIOR CMU WALL LOCATIONS, WHERE THE GRADE BEAM IS NOT SHOWN, PROVIDE SLAB TURNDOWN PER DETAIL 4/S-313 TYPICAL. AT INTERIOR GLAZING LOCATIONS, WHERE THE GRADE BEAM IS NOT SHOWN, PROVIDE TURNDOWN SIMILAR TO DETAIL 4/S-313; TYPICAL.

17. PIERS / FOOTINGS WITHOUT CENTERLINES SHOWN ON PLANS, SECTIONS AND/OR DETAILS SHALL BE LOCATED AS FOLLOWS:

A. COLUMNS AND PILASTERS: CENTERLINE OF THE COLUMN.
B. GRADE BEAMS AND WALLS: CENTERLINE OF THE GRADE BEAM OR WALL.
C. ALONG THE LENGTH OF GRADE BEAMS AND WALLS: INTERMEDIATE PIERS/FOOTINGS SHALL BE SPACED EQUALLY BETWEEN PIERS/FOOTINGS THAT ARE DIMENSIONALLY SET ON PLAN OR AS NOTED ABOVE.
D. PIERS SUPPORTING SLABS ON CARTON FORMS: UNLESS NOTED OTHERWISE, PIERS NOT DIMENSIONED SHALL BE SPACED EQUALLY BETWEEN PIERS THAT ARE DIMENSIONALLY SET ON PLAN.

18. GC TO COORDINATE THE LOCATION OF ALL CONCRETE CURBS WITH ARCH DRAWINGS. REF 7/S-301 FOR DETAIL TYPICAL.

19. GC COORDINATE THE LOCATION OF ALL CANOPY COLUMNS WITH ARCH DRAWINGS.

20. INDICATES STRUCTURAL CMU THAT ARE PART OF THE STRUCTURAL LATERAL FORCE RESISTING SYSTEM AND SUPPORTS GRAVITY LOADS. REFER TO ARCH DRAWINGS FOR THE LOCATION OF ALL NON-STRUCTURAL CMU. A 3/8" VERTICAL CONTROL JOINT SHALL BE PROVIDED WHEREVER STRUCTURAL AND NON-STRUCTURAL CMU ABUT.

21. INDICATES NON-STRUCTURAL CMU THAT ARE NOT PART OF THE STRUCTURAL LATERAL FORCE RESISTING SYSTEM AND ARE NOT DESIGNED TO SUPPORTS GRAVITY LOADS. REFER TO ARCH DRAWINGS FOR THE LOCATION OF ALL NON-STRUCTURAL CMU. A 3/8" VERTICAL CONTROL JOINT SHALL BE PROVIDED WHEREVER STRUCTURAL AND NON-STRUCTURAL CMU ABUT.

22. IT CAN BE COMMON PRACTICE FOR STEEL STUB-UPS WITH STRUCTURAL STEEL SILL SUPPORT MEMBERS TO BE PROVIDED AT LONG FIRST FLOOR WINDOW SILLS (REF DETAIL 3/S-311); HOWEVER, FOR FIRST FLOOR WINDOWS, 8'-0" AND NARROWER, THE GC SHALL PROVIDE PRE-ENGINEERED COLD-FORM SILL SUPPORTS UTILIZING COLD-FORM FRAMING ONLY. THESE COLD-FORM SILL SHALL BE DESIGNED BY THE DRYWALL SUBCONTRACTOR'S ENGINEER AND SUBMITTED IN THE SHOP DRAWINGS FOR REVIEW. WHERE FIRST FLOOR WINDOW SILLS EXCEED 8'-0" THE CONTRACTOR SHALL PROVIDE MISCELLANEOUS STRUCTURAL STEEL PER 3/S-311 TYPICAL.

23. IT CAN BE COMMON PRACTICE FOR STEEL STUB-UPS WITH STRUCTURAL STEEL SILL SUPPORT MEMBERS TO BE PROVIDED AT LONG FIRST FLOOR WINDOW SILLS (REF DETAIL 3/S-311); HOWEVER, FOR FIRST FLOOR WINDOWS, 8'-0" AND NARROWER, THE GC SHALL PROVIDE PRE-ENGINEERED COLD-FORM SILL SUPPORTS UTILIZING COLD-FORM FRAMING ONLY. THESE COLD-FORM SILL SHALL BE DESIGNED BY THE DRYWALL SUBCONTRACTOR'S ENGINEER AND SUBMITTED IN THE SHOP DRAWINGS FOR REVIEW. WHERE FIRST FLOOR WINDOW SILLS EXCEED 8'-0" THE CONTRACTOR SHALL PROVIDE MISCELLANEOUS STRUCTURAL STEEL PER 3/S-311 TYPICAL.

24. PROVIDE STRUCTURAL GEO-FOAM WITH 4" CONCRETE TOPPING SLAB WITH WWF OVER SLAB ON GRADE FOR HATCHED AREAS. GEO-FOAM AND TOPPING SLAB BY MANUFACTURER - REF ARCH AND GENERAL NOTES. GC NOTE: ORIGINAL BASE / FLAT SLAB EXTENDS CONTINUOUS BELOW PLATFORM AND STAIRS. PROVIDE GEO-FOAM FILL BELOW PLATFORM WITH 4" CONCRETE TOPPING SLAB WITH 6x6x2.9x2.9 W.W.M. AT MID-HEIGHT OF SLAB. ADDITIONALLY PROVIDE 4" CONCRETE WALLS WITH #4 BARS AT 12" OC EACH WAY - DRILL AND EPOXY 4" INTO BASE/ FLAT SLAB WITH HILTI HY-200 V3 ADHESIVE.

25. REFER TO S-300 FOR CONCRETE FINISHES NOTES.

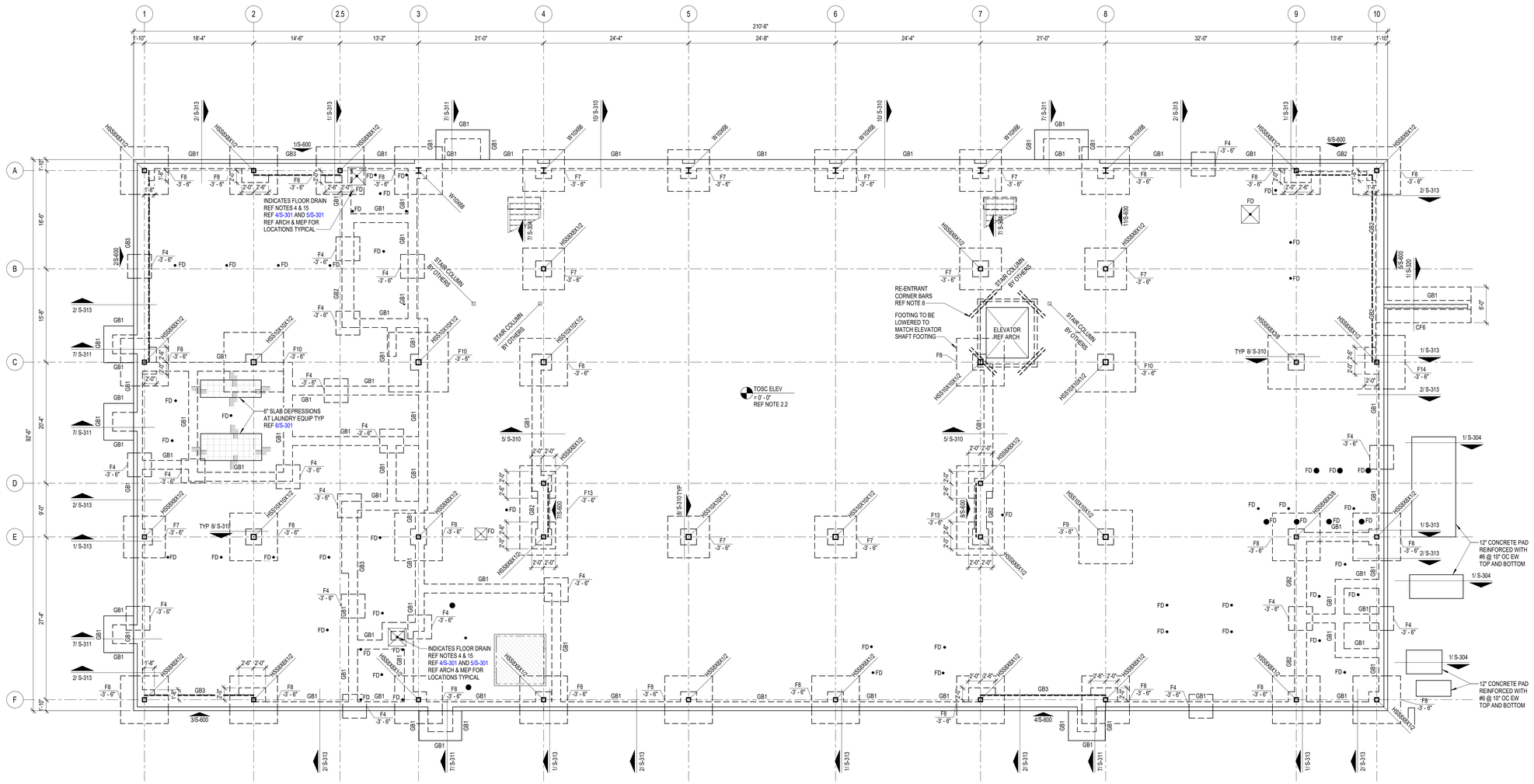

1 FOUNDATION PLAN
1/8" = 1'-0"

Kubala ENGINEERS
Ph: (900)246-3074
www.kubalaengineers.com
TX. REG. NO. F-23612

PBK
www.pbk.com
TX FIRM: BR 1608
HOUSTON, TX 713-966-0608

PKG 3A GPHS - Fieldhouse

1000 Keene St,
Galena Park, TX 77547

CLIENT PROJECT NO: 240539

ISSUE FOR PROPOSAL

Galena Park ISD

KEY PLAN
NORTH: PLAN TRUE

STATE OF TEXAS
JOHN R. KUBALA
106120
LICENSED PROFESSIONAL ENGINEER
06/10/2025
Kubala Engineers
F-23612

CLIENT	
Galena Park ISD	
DATE 06/10/2025	PROJECT NUMBER 240539

DRAWING HISTORY

No.	Description	Date

CHECKED BY: SI
DRAWN BY: CML

FOUNDATION PLAN

S-101

Plot Stamp:
6/9/2025 5:32:17 PM

SECOND FLOOR FRAMING PLAN
S-102

FOR BLUEBEAM LABELING/OCR:

GC PLEASE NOTE:

WHERE HORIZONTAL H WIND FORCES ARE INDICATED ON THE STRUCTURAL PLANS AS "H=X/X K (ASD)," IN CONJUNCTION WITH BRACE FRAMES, THE GENERAL CONTRACTOR IS REQUIRED TO ASSUME AN H LOAD OF 80 KIPS (ASD) ALONG THE ENTIRE GRID LINE OF BRACE FRAMES AT THE SECOND FLOORS, THIRD FLOORS, AND MEZZANINES. ADDITIONALLY, FOR HORIZONTAL H WIND FORCES INDICATED AS "H=X/X K (ASD)" IN CONJUNCTION WITH BRACE FRAMES AT THE ROOFS, THE GENERAL CONTRACTOR SHOULD ASSUME AN H LOAD OF 65 KIPS (ASD) ALONG THE ENTIRE GRID LINE. THE GC HOLDS THE RESPONSIBILITY FOR DESIGNING CONNECTIONS THAT CAN ACCOMMODATE THESE SPECIFIED LOAD ASSUMPTIONS. FOR FURTHER GUIDANCE ON CONNECTION DESIGN, PLEASE REFER TO CONNECTION GENERAL NOTE SHEET S-500. TYPICAL ALL AREAS.

COMPOSITE FLOOR DECK AND METAL ROOF DECK LEGEND

COMPOSITE FLOOR DECK TYPES

FLOOR DECK TYPE 1:
4 1/2" NWC ON 3.0 VLI 20 GA (GALV) (G90) COMPOSITE STEEL DECK (7 1/2" TOTAL SLAB THICKNESS). COMPOSITE SLAB SHALL BE REINFORCED WITH WWR 6x6-W2.9xW2.9, U.N.O.

METAL ROOF DECK TYPES

ROOF DECK TYPE 1:
1.0 CSV 20 GA (GALV.) (G90) VENTED MTL DECK.

ROOF DECK TYPE 2:
1.5B 20 GA (GALV.) (G90) MTL DECK.

NOTES:

1. STEEL DECK SHALL BE PLACED WITH TWO-SPAN CONDITION MMMUM. NO SINGLE SPANS ARE ALLOWED WITHOUT THE WRITTEN APPROVAL OF THE ENGINEER-OF-RECORD.
2. REF SLABS FORM DECK (AT FLOORS) GENERAL NOTES AND METAL DECK SCHEDULE ON SHEET S-504 FOR MORE INFORMATION REGARDING FLOOR DECK REQUIREMENTS.
3. REF METAL ROOF DECKING GENERAL NOTES AND METAL DECK SCHEDULE ON SHEET S-506 FOR MORE INFORMATION REGARDING ROOF DECK REQUIREMENTS.

COMPOSITE FLOOR PLAN NOTES

1. REF PLAN FOR TOP OF SLAB ELEVATION.
2. ALL ELEVATIONS ARE BASED ON TOSC EL = 0'-0".
3. STEEL DECK SHALL BE PLACED WITH A TWO-SPAN CONDITION MINIMUM. NO SINGLE SPANS ARE ALLOWED WITHOUT WRITTEN APPROVAL OF ENGINEER-OF-RECORD.
4. COMPOSITE BEAM CONSTRUCTION IS UNSHORED.
5. DETAILING OF ALL MEMBER CONNECTIONS TO THE SUPPORTS SHALL BE PERFORMED TO SATISFY LATEST OSHA ERECTION REQUIREMENTS.
6. TOS EL = BOTTOM OF DECK.
7. UNLESS SHOWN OTHERWISE, STEEL BEAMS OR JOISTS ARE CENTERED ON AND EQUALLY SPACED BETWEEN COLUMN CENTERLINES.
8. ALL STRUCTURAL STEEL THAT IS PERMANENTLY EXPOSED TO THE EXTERIOR OR IS PERMANENTLY IN UNCONDITIONED SPACE SHALL BE HOT-DIPPED GALVANIZED.
9. REFER TO MECHANICAL, ELECTRICAL, AND PLUMBING DRAWINGS FOR PENETRATIONS NOT SHOWN. REFER TO TYPICAL DETAILS FOR ADDITIONAL REINFORCEMENT REQUIREMENTS AT OPENINGS.
10. PROVIDE ADDITIONAL (5) - #5 CONT BARS IN COMPOSITE SLAB ALONG FULL PERIMETER OF SLAB AND AROUND OPENINGS. EXTEND BARS 10'-0" PAST CORNERS OF OPENINGS. PROVIDE STD HOOK AT TERMINATION ENDS. ALL LAPS IN REINFORCING SHALL BE WITH MECHANICAL COUPLERS OR 20'-0" LAP SPLICE TYPICAL. REFER TO DETAIL 1/S-504.
11. PROVIDE 6'-0" WIDE EXTRA LAYER OF WWF AT 3/4" CLR. FROM TOSC OVER EVERY SINGLE BEAM THAT RUNS BETWEEN COLUMNS IN ADDITION TO EVERY GIRDER BEAM TYPICAL.
12. CONTRACTOR TO VERIFY ALL SLAB EDGE DIMENSIONS WITH ARCHITECTURAL DRAWINGS PRIOR TO CONSTRUCTION.
13. INDICATES WIND BRACE BEAM BOTTOM FLANGE BRACING PER 2/S-505 TYPICAL ALONG ENTIRE GRID AT ALL BRACE FRAMES. AT LOCATIONS WHERE BEAM SPACING EXCEEDS 4'-0" OC, REF 1/S-505.
14. REF S0.XX SERIES DRAWINGS FOR GENERAL NOTES AND TYP DETAILS.
15. REF S4.XX SERIES DRAWINGS FOR CMU DETAILS.
16. REF S5.XX SERIES DRAWINGS FOR STEEL FRAMING DETAILS.
17. REF S6.XX SERIES DRAWINGS FOR STEEL BRACE ELEVATIONS AND DETAILS.
18. ⊠ ALL CMU SHOWN ON PLAN ARE PART OF THE STRUCTURAL LATERAL FORCE RESISTING SYSTEM AND SUPPORTS GRAVITY LOADS. NON-STRUCTURAL CMU EXISTS IN OTHER LOCATION (REF ARCH DRAWINGS). A 3/8" VERTICAL CONTROL JOINT SHALL BE PROVIDED WHEREVER STRUCTURAL AND NON-STRUCTURAL CMU ABUT.
19. INDICATES PLAN DIAGONAL STRUT WT5X15. COPE WEB AT BEAMS AND OVERLAP FLANGE 4". WELD TO TOP FLANGE AND COLUMNS WITH 5/16" FILLET WELD 3-SIDES TYPICAL.
20. GC SHALL COORDINATE LOCATION OF FOLDING PARTITIONS WITH ARCH DRAWINGS. REF DETAIL 1/S-509.
21. REF DETAIL -/---513 FOR ADDITIONAL REINFORCEMENT UNDER INTERIOR CMU WALLS PARALLEL TO DECK SPAN. GC TO COORDINATE THE LOCATION OF ALL CMU WALLS WITH ARCH DRAWINGS.
22. PROVIDE MISCELLANEOUS STEEL PER 12/S-501 ABOVE AND BELOW ANY WINDOW THAT DOES NOT ALIGN WITH THE BACK-UP, UNO, TYPICAL. LOOSE LINTELS REQUIRED BELOW WINDOW SHALL BE INVERTED (DOG LEG DOWN) TYPICAL.

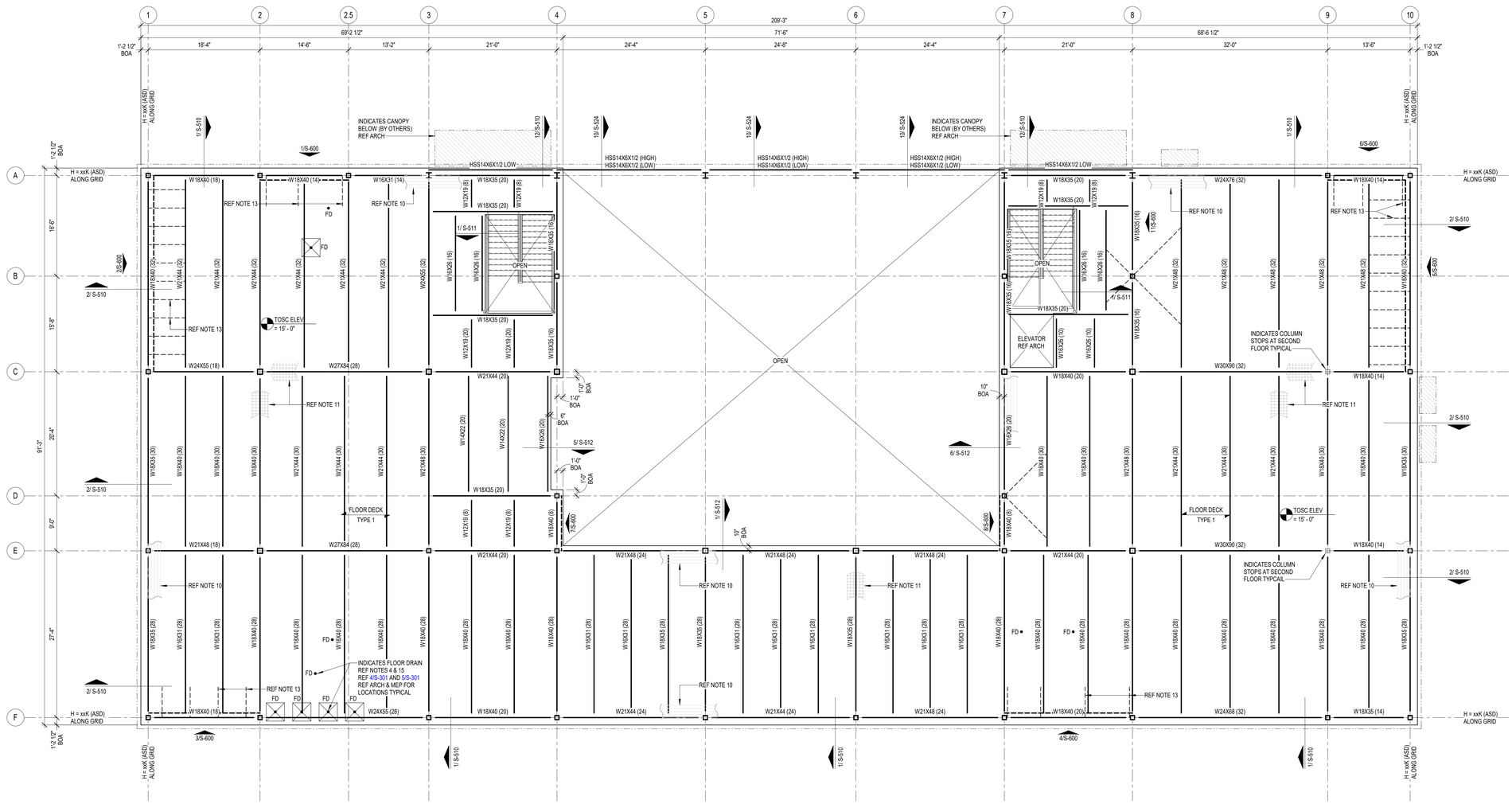

1 SECOND FLOOR FRAMING PLAN
1/8" = 1'-0"

Kubala ENGINEERS
Ph: (800)246-3674
www.kubalaengineers.com
TX. REG. NO. F-23612

PBK
www.pbk.com
TX FIRM: BR 1608
HOUSTON, TX
713-965-0608

PKG 3A GPHS - Fieldhouse

1000 Keene St.
Galena Park, TX 77547

CLIENT PROJECT NO: 240539

ISSUE FOR PROPOSAL

KEY PLAN
NORTH: PLAN TRUE

STATE OF TEXAS
JOHN R. KUBALA
106120
LICENSED PROFESSIONAL ENGINEER
06/10/2025
Kubala Engineers
F-23612

CLIENT	
Galena Park ISD	
DATE 06/10/2025	PROJECT NUMBER 240539

DRAWING HISTORY

No.	Description	Date

CHECKED BY: SI
DRAWN BY: CML

SECOND FLOOR FRAMING PLAN

S-102

Plot Stamp:
6/9/2025 5:32:18 PM

ROOF FRAMING PLAN
S-103

FOR BLUEBEAM LABELING/OCR:

GC PLEASE NOTE:

WHERE HORIZONTAL H WIND FORCES ARE INDICATED ON THE STRUCTURAL PLANS AS "H=XX.K (ASD)," IN CONJUNCTION WITH BRACE FRAMES, THE GENERAL CONTRACTOR IS REQUIRED TO ASSUME AN H LOAD OF 80 KIPS (ASD) ALONG THE ENTIRE GRID LINE OF BRACE FRAMES AT THE SECOND FLOORS, THIRD FLOORS, AND MEZZANINES. ADDITIONALLY, FOR HORIZONTAL H WIND FORCES INDICATED AS "H=XX.K (ASD)" IN CONJUNCTION WITH BRACE FRAMES AT THE ROOFS, THE GENERAL CONTRACTOR SHOULD ASSUME AN H LOAD OF 65 KIPS (ASD) ALONG THE ENTIRE GRID LINE. THE GC HOLDS THE RESPONSIBILITY FOR DESIGNING CONNECTIONS THAT CAN ACCOMMODATE THESE SPECIFIED LOAD ASSUMPTIONS. FOR FURTHER GUIDANCE ON CONNECTION DESIGN, PLEASE REFER TO CONNECTION GENERAL NOTE SHEET S-500. TYPICAL ALL AREAS.

GC PLEASE NOTE:

1. FOR THE BASE BID OF THIS PROJECT, THE GC SHALL ACCOUNT FOR 100% OF THE BEAMS, GIRDERS, AND PURLINS, CROSSING A HIP, VALLEY, AND RIDGE ROOF LINES TO BE BENT AND HAVE FULL CAPACITY MOMENT CONNECTIONS AT EACH LOCATION. CHANGES IN ROOF DECK SLOPE LOCATIONS ARE DEFINED AS WHEN A GIRDER BEAM OR PURLIN BEAM PASSES THROUGH A RIDGE LINE, HIP LINE, OR VALLEY LINE. THE BEND LOCATIONS VARY BASED ON WHERE THE ROOF DECK SLOPE CHANGE INTERSECTS WITH A PURLIN OR MAIN GIRDER BEAM. THE GC MUST COORDINATE WITH ROOF FRAMING PLANS AND ACCOUNT FOR THE FULL NUMBER OF ADDED MOMENT CONNECTIONS REQUIRED TO CREATE THE ROOF DECK SLOPES NEEDED FOR PROPER DRAINAGE.
2. FOR THE BASE BID OF THIS PROJECT, THE GC SHALL ACCOUNT FOR 100% OF THE JOISTS, CROSSING A HIP, VALLEY, AND RIDGE ROOF LINES TO BE DOUBLE OR TRIPLE PITCHED AS NEEDED AT EACH LOCATION. CHANGES IN ROOF DECK SLOPE LOCATIONS ARE DEFINED AS WHEN A JOIST PASSES THROUGH A RIDGE LINE, HIP LINE, OR VALLEY LINE. THE BEND LOCATIONS VARY BASED ON WHERE THE ROOF DECK SLOPE CHANGE INTERSECTS WITH JOIST. THE GC MUST COORDINATE WITH ROOF FRAMING PLANS AND ARCHITECTURAL DRAWINGS.
3. GC TO PROVIDE CONT 4X4X1/4 THICK BENT PLATE ALONG THE RIDGE, HIP, AND VALLEY LINES TO SUPPORT DECKING AT WRAP TYPICAL.
4. THE GENERAL CONTRACTOR IS REQUIRED TO PROVIDE A BRICK RELIEF ANGLE AT ANY POINT WHERE THE BRICK EXTENDS BEYOND THE ELEVATION OF 30'-0" AND IS SUPPORTED BY A CONCRETE MASONRY UNIT (CMU) BACKUP. PLEASE REFER TO DETAIL 7/S-402. THE BRICK RELIEF ANGLE SHOULD BE INSTALLED AT THE SECOND AND THIRD FLOORS WITHIN THE CLASSROOM AREAS AND ROTUNDA AS INDICATED IN COMPOSITE DETAILS AND SECTION CUTS ON PLANS.

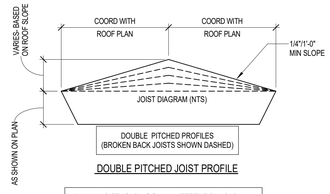

DOUBLE PITCHED JOIST PROFILE

MINIMUM JOIST LOADING SHALL MEET THE SJI LOAD TABLE CAPACITY OF THE JOIST SIZE PROVIDED IN THE STRUCTURAL DRAWINGS BASED ON JOIST SPAN, TYPICAL UNO. JOIST DESIGNER DESIGN FOR ANY AND ALL ADDITIONAL LOADS NOTED IN STRUCTURAL DRAWINGS.

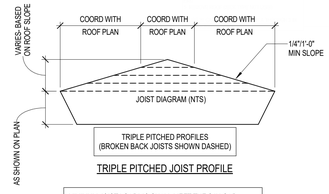

TRIPLE PITCHED JOIST PROFILE

MINIMUM JOIST LOADING SHALL MEET THE SJI LOAD TABLE CAPACITY OF THE JOIST SIZE PROVIDED IN THE STRUCTURAL DRAWINGS BASED ON JOIST SPAN, TYPICAL UNO. JOIST DESIGNER DESIGN FOR ANY AND ALL ADDITIONAL LOADS NOTED IN STRUCTURAL DRAWINGS.

JOIST DESIGNATIONS, SHOWN ON THE FRAMING PLANS, FOLLOWED BY THE DESIGNATION "CL" SUPPORT A CONCENTRATED DEAD LOAD. THE JOIST SIZES DESIGNATED ON THE FRAMING PLANS DO NOT TAKE INTO ACCOUNT THIS CONCENTRATED DEAD LOAD. THE JOIST MANUFACTURER SHALL DESIGN SPECIAL JOISTS TO SUPPORT THIS CONCENTRATED DEAD LOAD IN ADDITION TO THE TOTAL LOAD CAPACITY PROVIDED IN THE SJI LOAD TABLES FOR THE JOISTS SPECIFIED ON THE FRAMING PLANS. JOISTS SUPPORTING THESE CONCENTRATED DEAD LOADS SHALL BE FABRICATED SYMMETRICALLY ABOUT THEIR CENTERLINE. DESIGN JOISTS FOR THE FOLLOWING "CL" DESIGNATIONS WHERE SHOWN ON THE FRAMING PLANS:

1. CL1 - XXXX POUNDS LOCATED X-X" FROM THE FACE OF THE SUPPORTING PANEL ADJACENT TO HIGH ROOF.
2. CL2 - XXXX POUNDS LOCATED X-X" FROM THE CENTERLINE OF THE SUPPORTING STEEL BEAM.

COMPOSITE FLOOR DECK AND METAL ROOF DECK LEGEND

COMPOSITE FLOOR DECK TYPES

FLOOR DECK TYPE 1:
4 1/2" NWC ON 3.0 VLI 20 GA (GALV) (G90) COMPOSITE STEEL DECK (7 1/2" TOTAL SLAB THICKNESS). COMPOSITE SLAB SHALL BE REINFORCED WITH WWR 6x6-W2.9xW2.9, U.N.O.

METAL ROOF DECK TYPES

ROOF DECK TYPE 1:
1.0 CSV 20 GA (GALV.) (G90) VENTED MTL DECK.

ROOF DECK TYPE 2:
1.5B 20 GA (GALV.) (G90) MTL DECK.

NOTES:

1. STEEL DECK SHALL BE PLACED WITH TWO-SPAN CONDITION MINIMUM. NO SINGLE SPANS ARE ALLOWED WITHOUT THE WRITTEN APPROVAL OF THE ENGINEER-OF-RECORD.
2. REF SLABS FORM DECK (AT FLOORS) GENERAL NOTES AND METAL DECK SCHEDULE ON SHEET S-504 FOR MORE INFORMATION REGARDING FLOOR DECK REQUIREMENTS.
3. REF METAL ROOF DECKING GENERAL NOTES AND METAL DECK SCHEDULE ON SHEET S-506 FOR MORE INFORMATION REGARDING ROOF DECK REQUIREMENTS.

ROOF PLAN NOTES

1. REF PLAN FOR TOP OF SLAB ELEVATION.
2. ALL ELEVATIONS ARE BASED ON TOSC EL = 0'-0".
3. TOP OF ROOF STRUCTURE IS SLOPED FOR DRAINAGE. REF ELEVATIONS NOTED ON PLAN. SLOPES SHALL BE UNIFORM BETWEEN COLUMN CENTERLINES UNLESS SHOWN OTHERWISE.
4. JOIST MFR NOTE:
BRIDGING NOT SHOWN ON PLAN. MANUFACTURER SHALL PROVIDE STANDARD BRIDGING COMPLYING WITH SJI SPECIFICATIONS OF LATEST ADOPTION. TYPICAL FOR GRAVITY AND UPLIFT LOADS SUPERIMPOSED ON ALL JOISTS. DIAGONAL BRIDGING SHALL BE PROVIDED BETWEEN ADJACENT JOISTS WHENEVER BOTTOM CHORD HORIZONTAL BRIDGING IS CONTINUOUS.
5. REFER TO THE ROOF DIAPHRAGM CONNECTION SCHEDULE FOR DECK ATTACHMENT TO ROOF FRAMING MEMBERS AND DECK FASTENER TYPE, SIZE AND SPACING.
6. REF ARCH FOR TOP OF WALL ELEVATIONS.
7. DETAILING OF ALL MEMBER CONNECTIONS TO THE SUPPORTS SHALL BE PERFORMED TO SATISFY LATEST OSHA ERECTION REQUIREMENTS.
8. TOS EL = BOTTOM OF DECK.
9. UNLESS SHOWN OTHERWISE, STEEL BEAMS OR JOISTS ARE CENTERED ON AND EQUALLY SPACED BETWEEN COLUMN CENTERLINES.
10. ALL STRUCTURAL STEEL THAT IS PERMANENTLY EXPOSED TO THE EXTERIOR OR IS PERMANENTLY IN UNCONDITIONED SPACE SHALL BE HOT-DIPPED GALVANIZED.
11. GC COORDINATE ALL PENETRATIONS AND UNDERGROUND UTILITIES WITH MECHANICAL, ELECTRICAL, AND PLUMBING DRAWINGS. REFER TO TYPICAL DETAILS FOR ADDITIONAL REINFORCEMENT REQUIREMENTS.
12. CONTRACTOR TO VERIFY ALL SLAB EDGE DIMENSIONS WITH ARCHITECTURAL DRAWINGS PRIOR TO CONSTRUCTION.
13. INDICATES WIND BRACE BEAM BOTTOM FLANGE BRACING PER 4/S-508. PROVIDE BFB ALONG THE ENTIRE GRID LINE WHERE A BRACE IS PRESENT IN AT LEAST ONE BAY. THIS INCLUDES THE BRACED FRAME BAY AS WELL AS ALL OTHER BAYS ALONG THAT GRID LINE WHERE A BRACE IS LOCATED. NOT ALL DASHED LINES ARE SHOWN ON THE PLAN FOR CLARITY.
14. REF DETAIL 5/S-507 WHERE ROOF TOP EQUIPMENT REQUIRES A STRUCTURAL CURB. JOISTS THAT ARE SUPPORTING ROOF TOP EQUIPMENT SHALL BE DESIGNED FOR AN ADDITIONAL CONCENTRATED DEAD LOAD (AS SHOWN ON PLAN AT ANY POINT ALONG JOIST SPAN). GC SHALL COORDINATE WITH MEP, ARCHITECTURE AND EQUIPMENT CUTSHEETS FOR FINAL WEIGHT, DIMENSIONS, LOCATION, ETC.
15. — — — — INDICATES PIPING RUN. REF MEP DRAWINGS; GC SHALL COORDINATE GIVEN LOAD WITH JOIST MANUFACTURER. REF SHEET S-011.
16. REF S0.XX SERIES DRAWINGS FOR GENERAL NOTES AND TYP DETAILS
17. REF S4.XX SERIES DRAWINGS FOR CMU DETAILS.
18. REF S5.XX SERIES DRAWINGS FOR STEEL FRAMING DETAILS.
19. REF S6.XX SERIES DRAWINGS FOR STEEL BRACE ELEVATIONS AND DETAILS.
20. INDICATES COLUMN BRACING PER 5/S-502. TYPICAL AT COLUMNS UNBRACED BY FRAMING MEMBER ABOUT THEIR LOCAL AXIS. NOT ALL SHOWN ON PLAN FOR MORE CLARITY.
21. INDICATES PLAN DIAGONAL STRUT WTSX15. COPE WEB AT BEAMS AND OVERLAP FLANGE 4", WELD TO TOP FLANGE AND COLUMNS WITH 5/16" FILLET WELD 3-SIDES TYPICAL.
22. UPLIFT X-BRIDGING NOT SHOWN ON PLANS FOR CLARITY. GC SHALL PROVIDE X-BRIDGING BETWEEN ADJACENT WF BEAMS AT ROOF PER DETAIL 3/S-507.
23. GC SHALL COORDINATE LOCATION OF FOLDING PARTITIONS WITH ARCH DRAWINGS. JOISTS ABOVE FOLDING PARTITION SHALL BE DESIGNED FOR ADD'L DL= 2.0 K (PERP.) OR DL= 0.5 KLF (PARALLEL) (DEF. FROM DL SHALL NOT EXCEED 3/8"). END JOISTS ABOVE FOLDING PARTITION SHALL BE DESIGNED FOR STACKED END LOAD EQUAL TO 9000 POUNDS FOR BOTH ENDS (DEF. FROM DL SHALL NOT EXCEED 3/8"). REF DETAIL 1/S-509.
24. PROVIDE MISCELLANEOUS STEEL PER 12/S-501 ABOVE AND BELOW ANY WINDOW THAT DOES NOT ALIGN WITH THE BACK-UP, UNO, TYPICAL. LOOSE LINTELS REQUIRED BELOW WINDOW SHALL BE INVERTED (DOG LEG DOWN) TYPICAL.
25. ALL JOISTS LOCATED BENEATH ROOFTOP UNITS AND THE ADJACENT JOISTS ON EACH SIDE THAT ARE NOT ENTIRELY POSITIONED UNDER THE ROOFTOP UNIT MUST BE DESIGNED TO SUPPORT A DEAD LOAD OF 2.0 KIPS,UNO ON PLANS. GC MUST COORDINATE LOCATION OF RTU'S WITH MEP DRAWII 'GS.

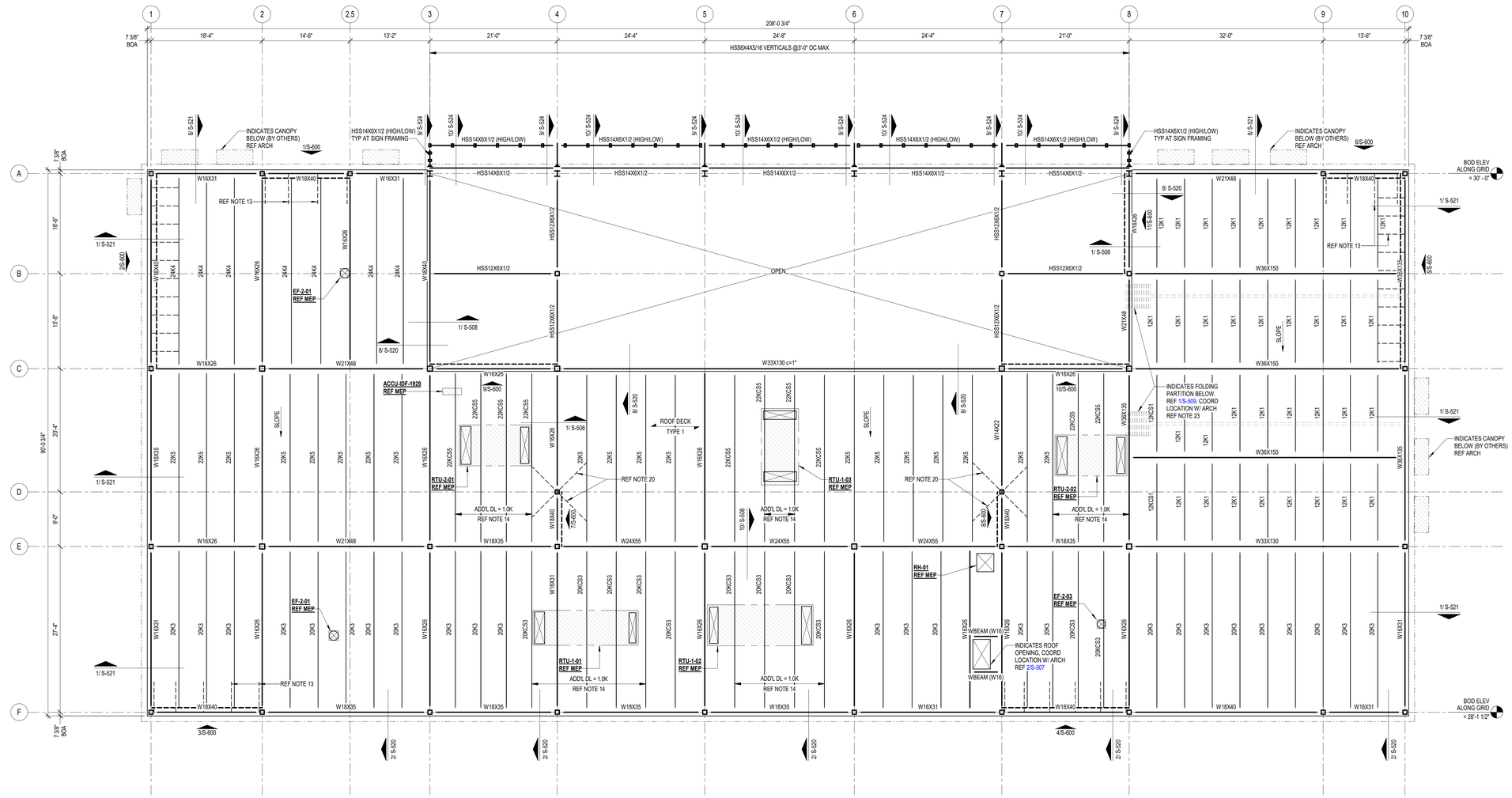

1 ROOF FRAMING PLAN
1/8" = 1'-0"

Kubala ENGINEERS
Ph: (800)246-3674
www.kubalaengineers.com
TX. REG. NO. F-23612

PBK
www.pbk.com
TX FIRM: BR 1608
HOUSTON, TX 713-965-0608

PKG 3A GPHS - Fieldhouse

1000 Keene St.
Galena Park, TX 77547

CLIENT PROJECT NO: 240539

ISSUE FOR PROPOSAL

KEY PLAN
NORTH: PLAN TRUE

STATE OF TEXAS
JOHN R. KUBALA
106120
06/10/2025
Kubala Engineers
F-23612

CLIENT	
Galena Park ISD	
DATE 06/10/2025	PROJECT NUMBER 240539

DRAWING HISTORY

No.	Description	Date

CHECKED BY: SI

DRAWN BY: CML

ROOF FRAMING PLAN

S-103

Plot Stamp:
6/9/2025 5:32:19 PM

POP-UP ROOF FRAMING PLAN
S-104

FOR BLUEBEAM LABELING/OCR:

GC PLEASE NOTE:

WHERE HORIZONTAL H WIND FORCES ARE INDICATED ON THE STRUCTURAL PLANS AS "H=XX.K (ASD)," IN CONJUNCTION WITH BRACE FRAMES, THE GENERAL CONTRACTOR IS REQUIRED TO ASSUME AN H LOAD OF 80 KIPS (ASD) ALONG THE ENTIRE GRID LINE OF BRACE FRAMES AT THE SECOND FLOORS, THIRD FLOORS, AND MEZZANINES. ADDITIONALLY, FOR HORIZONTAL H WIND FORCES INDICATED AS "H=XX.K (ASD)" IN CONJUNCTION WITH BRACE FRAMES AT THE ROOFS, THE GENERAL CONTRACTOR SHOULD ASSUME AN H LOAD OF 65 KIPS (ASD) ALONG THE ENTIRE GRID LINE. THE GC HOLDS THE RESPONSIBILITY FOR DESIGNING CONNECTIONS THAT CAN ACCOMMODATE THESE SPECIFIED LOAD ASSUMPTIONS. FOR FURTHER GUIDANCE ON CONNECTION DESIGN, PLEASE REFER TO CONNECTION GENERAL NOTE SHEET S-500. TYPICAL ALL AREAS.

GC PLEASE NOTE:

1. FOR THE BASE BID OF THIS PROJECT, THE GC SHALL ACCOUNT FOR 100% OF THE BEAMS, GIRDERS, AND PURLINS, CROSSING A HIP, VALLEY, AND RIDGE ROOF LINES TO BE BENT AND HAVE FULL CAPACITY MOMENT CONNECTIONS AT EACH LOCATION. CHANGES IN ROOF DECK SLOPE LOCATIONS ARE DEFINED AS WHEN A GIRDER BEAM OR PURLIN BEAM PASSES THROUGH A RIDGE LINE, HIP LINE, OR VALLEY LINE. THE BEND LOCATIONS VARY BASED ON WHERE THE ROOF DECK SLOPE CHANGE INTERSECTS WITH A PURLIN OR MAIN GIRDER BEAM. THE GC MUST COORDINATE WITH ROOF FRAMING PLANS AND ACCOUNT FOR THE FULL NUMBER OF ADDED MOMENT CONNECTIONS REQUIRED TO CREATE THE ROOF DECK SLOPES NEEDED FOR PROPER DRAINAGE.
2. FOR THE BASE BID OF THIS PROJECT, THE GC SHALL ACCOUNT FOR 100% OF THE JOISTS, CROSSING A HIP, VALLEY, AND RIDGE ROOF LINES TO BE DOUBLE OR TRIPLE PITCHED AS NEEDED AT EACH LOCATION. CHANGES IN ROOF DECK SLOPE LOCATIONS ARE DEFINED AS WHEN A JOIST PASSES THROUGH A RIDGE LINE, HIP LINE, OR VALLEY LINE. THE BEND LOCATIONS VARY BASED ON WHERE THE ROOF DECK SLOPE CHANGE INTERSECTS WITH JOIST. THE GC MUST COORDINATE WITH ROOF FRAMING PLANS AND ARCHITECTURAL DRAWINGS.
3. GC TO PROVIDE CONT 4X4X1/4 THICK BENT PLATE ALONG THE RIDGE, HIP, AND VALLEY LINES TO SUPPORT DECKING AT WRAP TYPICAL.
4. THE GENERAL CONTRACTOR IS REQUIRED TO PROVIDE A BRICK RELIEF ANGLE AT ANY POINT WHERE THE BRICK EXTENDS BEYOND THE ELEVATION OF 30'-0" AND IS SUPPORTED BY A CONCRETE MASONRY UNIT (CMU) BACKUP. PLEASE REFER TO DETAIL 7/S-402. THE BRICK RELIEF ANGLE SHOULD BE INSTALLED AT THE SECOND AND THIRD FLOORS WITHIN THE CLASSROOM AREAS AND ROTUNDA AS INDICATED IN COMPOSITE DETAILS AND SECTION CUTS ON PLANS.

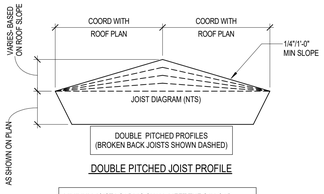

DOUBLE PITCHED JOIST PROFILE

MINIMUM JOIST LOADING SHALL MEET THE SJI LOAD TABLE CAPACITY OF THE JOIST SIZE PROVIDED IN THE STRUCTURAL DRAWINGS BASED ON JOIST SPAN, TYPICAL UNO. JOIST DESIGNER DESIGN FOR ANY AND ALL ADDITIONAL LOADS NOTED IN STRUCTURAL DRAWINGS.

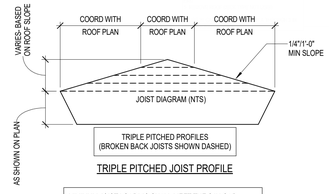

TRIPLE PITCHED JOIST PROFILE

MINIMUM JOIST LOADING SHALL MEET THE SJI LOAD TABLE CAPACITY OF THE JOIST SIZE PROVIDED IN THE STRUCTURAL DRAWINGS BASED ON JOIST SPAN, TYPICAL UNO. JOIST DESIGNER DESIGN FOR ANY AND ALL ADDITIONAL LOADS NOTED IN STRUCTURAL DRAWINGS.

JOIST DESIGNATIONS, SHOWN ON THE FRAMING PLANS, FOLLOWED BY THE DESIGNATION "CL" SUPPORT A CONCENTRATED DEAD LOAD. THE JOIST SIZES DESIGNATED ON THE FRAMING PLANS DO NOT TAKE INTO ACCOUNT THIS CONCENTRATED DEAD LOAD. THE JOIST MANUFACTURER SHALL DESIGN SPECIAL JOISTS TO SUPPORT THIS CONCENTRATED DEAD LOAD IN ADDITION TO THE TOTAL LOAD CAPACITY PROVIDED IN THE SJI LOAD TABLES FOR THE JOISTS SPECIFIED ON THE FRAMING PLANS. JOISTS SUPPORTING THESE CONCENTRATED DEAD LOADS SHALL BE FABRICATED SYMMETRICALLY ABOUT THEIR CENTERLINE. DESIGN JOISTS FOR THE FOLLOWING "CL" DESIGNATIONS WHERE SHOWN ON THE FRAMING PLANS:

1. CL1 - XXXX POUNDS LOCATED X-X" FROM THE FACE OF THE SUPPORTING PANEL ADJACENT TO HIGH ROOF.
2. CL2 - XXXX POUNDS LOCATED X-X" FROM THE CENTERLINE OF THE SUPPORTING STEEL BEAM.

COMPOSITE FLOOR DECK AND METAL ROOF DECK LEGEND

COMPOSITE FLOOR DECK TYPES

FLOOR DECK TYPE 1:
4 1/2" NWC ON 3.0 VLI 20 GA (GALV) (G90) COMPOSITE STEEL DECK (7 1/2" TOTAL SLAB THICKNESS). COMPOSITE SLAB SHALL BE REINFORCED WITH WWR 6x6-W2.9xW2.9, U.N.O.

METAL ROOF DECK TYPES

ROOF DECK TYPE 1:
1.0 CSV 20 GA (GALV.) (G90) VENTED MTL DECK.

ROOF DECK TYPE 2:
1.5B 20 GA (GALV.) (G90) MTL DECK.

NOTES:

1. STEEL DECK SHALL BE PLACED WITH TWO-SPAN CONDITION MINIMUM. NO SINGLE SPANS ARE ALLOWED WITHOUT THE WRITTEN APPROVAL OF THE ENGINEER-OF-RECORD.
2. REF SLABS FORM DECK (AT FLOORS) GENERAL NOTES AND METAL DECK SCHEDULE ON SHEET S-504 FOR MORE INFORMATION REGARDING FLOOR DECK REQUIREMENTS.
3. REF METAL ROOF DECKING GENERAL NOTES AND METAL DECK SCHEDULE ON SHEET S-506 FOR MORE INFORMATION REGARDING ROOF DECK REQUIREMENTS.

ROOF PLAN NOTES

1. REF PLAN FOR TOP OF SLAB ELEVATION.
2. ALL ELEVATIONS ARE BASED ON TOSC EL = 0'-0".
3. TOP OF ROOF STRUCTURE IS SLOPED FOR DRAINAGE. REF ELEVATIONS NOTED ON PLAN. SLOPES SHALL BE UNIFORM BETWEEN COLUMN CENTERLINES UNLESS SHOWN OTHERWISE.
4. JOIST MFR NOTE:
   BRIDGING NOT SHOWN ON PLAN. MANUFACTURER SHALL PROVIDE STANDARD BRIDGING COMPLYING WITH SJI SPECIFICATIONS OF LATEST ADOPTION. TYPICAL FOR GRAVITY AND UPLIFT LOADS SUPERIMPOSED ON ALL JOISTS. DIAGONAL BRIDGING SHALL BE PROVIDED BETWEEN ADJACENT JOISTS WHENEVER BOTTOM CHORD HORIZONTAL BRIDGING IS CONTINUOUS.
5. REFER TO THE ROOF DIAPHRAGM CONNECTION SCHEDULE FOR DECK ATTACHMENT TO ROOF FRAMING MEMBERS AND DECK FASTENER TYPE, SIZE AND SPACING.
6. REF ARCH FOR TOP OF WALL ELEVATIONS.
7. DETAILING OF ALL MEMBER CONNECTIONS TO THE SUPPORTS SHALL BE PERFORMED TO SATISFY LATEST OSHA ERECTION REQUIREMENTS.
8. TOS EL = BOTTOM OF DECK.
9. UNLESS SHOWN OTHERWISE, STEEL BEAMS OR JOISTS ARE CENTERED ON AND EQUALLY SPACED BETWEEN COLUMN CENTERLINES.
10. ALL STRUCTURAL STEEL THAT IS PERMANENTLY EXPOSED TO THE EXTERIOR OR IS PERMANENTLY IN UNCONDITIONED SPACE SHALL BE HOT-DIPPED GALVANIZED.
11. GC COORDINATE ALL PENETRATIONS AND UNDERGROUND UTILITIES WITH MECHANICAL, ELECTRICAL, AND PLUMBING DRAWINGS. REFER TO TYPICAL DETAILS FOR ADDITIONAL REINFORCEMENT REQUIREMENTS.
12. CONTRACTOR TO VERIFY ALL SLAB EDGE DIMENSIONS WITH ARCHITECTURAL DRAWINGS PRIOR TO CONSTRUCTION.
13. INDICATES WIND BRACE BEAM BOTTOM FLANGE BRACING PER 4/S-508. PROVIDE BFB ALONG THE ENTIRE GRID LINE WHERE A BRACE IS PRESENT IN AT LEAST ONE BAY. THIS INCLUDES THE BRACED FRAME BAY AS WELL AS ALL OTHER BAYS ALONG THAT GRID LINE WHERE A BRACE IS LOCATED. NOT ALL DASHED LINES ARE SHOWN ON THE PLAN FOR CLARITY.
14. REF DETAIL 5/S-507 WHERE ROOF TOP EQUIPMENT REQUIRES A STRUCTURAL CURB. JOISTS THAT ARE SUPPORTING ROOF TOP EQUIPMENT SHALL BE DESIGNED FOR AN ADDITIONAL CONCENTRATED DEAD LOAD (AS SHOWN ON PLAN AT ANY POINT ALONG JOIST SPAN). GC SHALL COORDINATE WITH MEP, ARCHITECTURE AND EQUIPMENT CUTSHEETS FOR FINAL WEIGHT, DIMENSIONS, LOCATION, ETC.
15. — — — — INDICATES PIPING RUN. REF MEP DRAWINGS; GC SHALL COORDINATE GIVEN LOAD WITH JOIST MANUFACTURER. REF SHEET S-011.
16. REF S0.XX SERIES DRAWINGS FOR GENERAL NOTES AND TYP DETAILS
17. REF S4.XX SERIES DRAWINGS FOR CMU DETAILS.
18. REF S5.XX SERIES DRAWINGS FOR STEEL FRAMING DETAILS.
19. REF S6.XX SERIES DRAWINGS FOR STEEL BRACE ELEVATIONS AND DETAILS.
20. INDICATES COLUMN BRACING PER 5/S-502. TYPICAL AT COLUMNS UNBRACED BY FRAMING MEMBER ABOUT THEIR LOCAL AXIS. NOT ALL SHOWN ON PLAN FOR MORE CLARITY.
21. INDICATES PLAN DIAGONAL STRUT WTSX15. COPE WEB AT BEAMS AND OVERLAP FLANGE 4", WELD TO TOP FLANGE AND COLUMNS WITH 5/16" FILLET WELD 3-SIDES TYPICAL.
22. UPLIFT X-BRIDGING NOT SHOWN ON PLANS FOR CLARITY. GC SHALL PROVIDE X-BRIDGING BETWEEN ADJACENT WF BEAMS AT ROOF PER DETAIL 3/S-507.
23. GC SHALL COORDINATE LOCATION OF FOLDING PARTITIONS WITH ARCH DRAWINGS. JOISTS ABOVE FOLDING PARTITION SHALL BE DESIGNED FOR ADD'L DL= 2.0 K (PERP.) OR DL= 0.5 KLF (PARALLEL) (DEF. FROM DL SHALL NOT EXCEED 3/8"). END JOISTS ABOVE FOLDING PARTITION SHALL BE DESIGNED FOR STACKED END LOAD EQUAL TO 9000 POUNDS FOR BOTH ENDS (DEF. FROM DL SHALL NOT EXCEED 3/8"). REF DETAIL 1/S-509.
24. PROVIDE MISCELLANEOUS STEEL PER 12/S-501 ABOVE AND BELOW ANY WINDOW THAT DOES NOT ALIGN WITH THE BACK-UP, UNO, TYPICAL. LOOSE LINTELS REQUIRED BELOW WINDOW SHALL BE INVERTED (DOG LEG DOWN) TYPICAL.
25. ALL JOISTS LOCATED BENEATH ROOFTOP UNITS AND THE ADJACENT JOISTS ON EACH SIDE THAT ARE NOT ENTIRELY POSITIONED UNDER THE ROOFTOP UNIT MUST BE DESIGNED TO SUPPORT A DEAD LOAD OF 2.0 KIPS,UNO ON PLANS. GC MUST COORDINATE LOCATION OF RTU'S WITH MEP DRAWINGS.

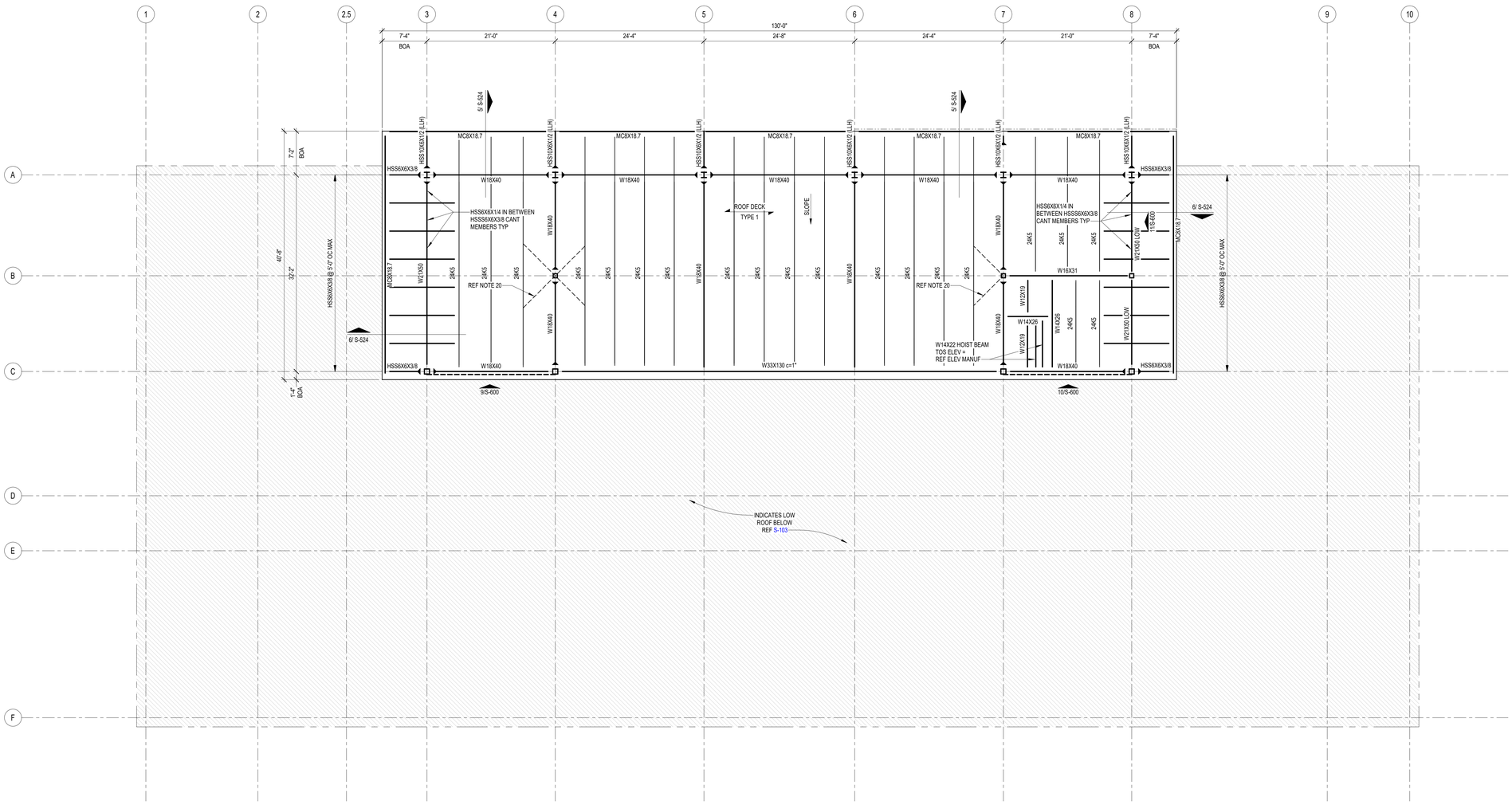

1 POP-UP ROOF FRAMING PLAN
1/8" = 1'-0"

Kubala ENGINEERS
Ph: (800)246-3674
www.kubalaengineers.com
TX. REG. NO. F-23612

PBK
www.pbk.com
TX FIRM: BR 1608
HOUSTON, TX
713-965-0608

PKG 3A GPHS - Fieldhouse

1000 Keene St.
Galena Park, TX 77547

CLIENT PROJECT NO: 240539

ISSUE FOR PROPOSAL

KEY PLAN
NORTH: PLAN TRUE

STATE OF TEXAS
JOHN R. KUBALA
106120
06/10/2025
Kubala Engineers
F-23612

CLIENT	
Galena Park ISD	
DATE 06/10/2025	PROJECT NUMBER 240539

DRAWING HISTORY

No.	Description	Date

CHECKED BY: SI
DRAWN BY: CML

POP-UP ROOF FRAMING PLAN

S-104

Plot Stamp:
6/9/2025 5:32:20 PM

GENERAL CONCRETE AND STL REINF NOTES AND TYP DETAILS
S-300
FOR BLUEBEAM LABELING/OCR:

0"
1"

CONCRETE MIX:

1. CONCRETE SPECIFICATIONS SHALL BE AS FOLLOWS:

USAGE	CONCRETE MIX DESIGN SCHEDULE										
	28 DAY STRENGTH (PSI)				MAX AGGREGATE SIZE (IN)	SLUMP (IN)	MAX W/C RATIO	MAX CURE DENSITY (PCF)	CEMENT TYPE	MAX ALLOWABLE % FLY ASH (REF CM5)	% AIR ENTRAINMENT
	3000	3500	4000	5000							
1. PIERS			•		1 1/2	6-8	0.55	150	I / II	40	-
2. FOOTINGS			•		1	3-5	0.50	150	I / II	30	5
3. SLAB-ON-GRADE **			•		1	3-5	0.50	150	I / II	20	-
4. GRADE BEAMS AND PLINTHS **			•		1	3-5	0.50	150	I / II	20	-
5. COLUMNS			•		1	3-5	0.50	150	I / II	20	-
6. BEAMS			•		1	3-5	0.50	150	I / II	20	-
11. NORMAL WEIGHT SLAB ON COMPOSITE METAL DECK			•		1	3-5	0.45	150	I / II	20	-
12. LIGHT WEIGHT SLAB ON COMPOSITE METAL DECK			•		1	3-5	0.45	117 ± 3	I / II	20	5-5
13. SLAB-ON-VOID FORMS **			•		1	3-5	0.50	150	I / II	20	-
14. SLAB FOR EQUIPMENT PADS			•		1	3-5	0.45	150	I / II	20	5- 7 IF EXPOSED TO WEATHER
15. MASS CONCRETE(ALSO REFER TO MASS CONCRETE NOTES AT 56 DAYS)			•		1	3-5	0.40	150	II	40	-
16. NON-COMPOSITE TOPPING SLAB		•			1	5-7	0.45	150	I / II	-	-

**** - SPECIAL GC NOTE FOR CONCRETE WHICH IS PART OF A DEPRESSED AREA. SEE CONCRETE MIX NOTE 10.**

2. PORTLAND CEMENT SHALL CONFORM TO ASTM C150, OF TYPES NOTED IN SCHEDULE. NORMAL WEIGHT AGGREGATE SHALL CONFORM TO ASTM C33. LIGHT WEIGHT AGGREGATE SHALL CONFORM TO ASTM C330. ALL AGGREGATE SHALL BE FROM A SINGLE SOURCE.
3. FLY ASH WILL NOT BE PERMITTED IN ARCHITECTURALLY EXPOSED CONCRETE. FLY ASH MAY BE USED ELSEWHERE, WITHIN THE SPECIFIED PROPORTION LIMITS, BUT THE CONTRACTOR SHALL FIRST VERIFY COMPATIBILITY WITH CURING COMPOUNDS, SEALERS, BOND BREAKER, FLOORING ADHESIVES AND OTHER MATERIALS PROPOSED TO BE IN CONTACT WITH THE CONCRETE.
4. CONCRETE MIX DESIGNS SHALL BE SUBMITTED FOR REVIEW A MINIMUM OF 7 DAYS PRIOR TO THE START OF THE WORK FOR ENGINEER AND OWNERS TESTING LABORATORY APPROVAL, PRIOR TO THE PLACEMENT OF CONCRETE. MIX DESIGNS MUST INDICATE CONFORMANCE WITH ACI 301 SPECIFICATION, SECTION 4.2.3.
5. AT THE POINT OF DISCHARGE SLUMP TESTS, CONFORMING TO ASTM C143, SHALL BE TAKEN. SEE CONCRETE NOTE NO. 5 BELOW FOR RATE OF TESTS.
6. AIR CONTENT TESTS CONFORMING TO ASTM C173 (VOLUMETRIC METHOD FOR LIGHTWEIGHT OR NORMAL WEIGHT CONCRETE; ASTM C231 PRESSURE METHOD FOR NORMAL WEIGHT CONCRETE) SHALL BE TAKEN FOR EACH DAY'S POUR FOR ALL TYPES OF AIR-ENTRAINED CONCRETE BEING USED.
7. CONCRETE TEMPERATURE SHALL BE TESTED HOURLY WHEN THE AIR TEMPERATURE IS 40 DEG F AND BELOW, 80 DEG F AND ABOVE AND EACH TIME A SET OF COMPRESSION TEST SPECIMENS ARE MADE.
8. ONE SET OF FOUR COMPRESSION TEST SPECIMENS CONFORMING TO ASTM C31 SHALL BE MOLDED AND STORED FOR LABORATORY-CURED SPECIMENS. COMPRESSIVE STRENGTH TESTS SHALL CONFORM TO ASTM C39 AND SHALL CONSIST OF ONE SET FOR EACH DAY'S POUR EXCEEDING 5 CU. YDS. PLUS ADDITIONAL SETS FOR EACH 50 CU. YDS. MORE THAN THE FIRST 25 CU. YDS OF EACH CONCRETE CLASS PLACED IN ANY ONE DAY. ONE SPECIMEN SHALL BE TESTED AT 7 DAYS, TWO SPECIMENS SHALL BE TESTED AT 28 DAYS, AND ONE SPECIMEN SHALL BE RETAINED FOR LATER TESTING AS REQUIRED.
9. VERIFY THAT POST INSTALLED ANCHORS ARE INSTALLED PER THE MANUFACTURER'S RECOMMENDATIONS AND REQUIREMENTS.
10. **SPECIAL GC NOTE FOR CONCRETE WHICH IS PART OF A DEPRESSED AREA**:
    A. AT ALL DEPRESSIONS GREATER THAN OR EQUAL TO MINUS 6 INCHES FROM THE MAIN FINISH FLOOR THE GC SHALL PROVIDE XYPEX C-500 ADMIXTURE (AT AN ASSUMED MINIMUM RATE OF 15 LBS/CU YD) INTO ALL OF THE CONCRETE. THE ADMIXTURE SHALL BE PLACED INTO THE MIX AT THE TIME OF BATCHING AT THE PLANT. DO NOT ADD DRY BAG MIX TO THE WET CONCRETE TRUCK ON-SITE. THE GC SHALL STRICTLY FOLLOW ALL MANUFACTURER'S INSTRUCTIONS FOR ADDITION, USE, HANDLING, ETC. THE ADD MIXTURE SHALL BE ADDED TO ALL OF THE CONCRETE WHICH MAKES UP ANY DEPRESSION GREATER THAN OR EQUAL TO MINUS 6 INCHES FROM THE MAIN FINISH FLOOR, THIS INCLUDES BUT IS NOT LIMITED TO: DEPRESSED SLABS (FULL THICKNESS), ALL VERTICAL STEM WALLS (FULL THICKNESS) AND/OR ANY GRADE BEAMS (FULL DEPTH AND THICKNESS) WHICH FORM ANY PORTION OF THE VERTICAL DROP AND ALL HORIZONTAL SLAB FOR THE DEPRESSED AREA. THIS DOES NOT REDUCE OR REVISE ANY WATERPROOFING TREATMENTS, LAYERS OR SUBSTRATES THAT ARE CURRENTLY REQUIRED BY THE STRUCTURAL, ARCHITECTURAL, AND/OR OTHER CONSULTANT DRAWINGS, THIS IS IN ADDITION TO THOSE CURRENT MEASURES. THE COST FOR THIS ADMIXTURE SHALL BE ACCOUNTED FOR WITHIN THE BASE BID AND SHALL INCLUDE, BUT IS NOT LIMITED TO ALL AREAS ARCHITECTURALLY LABELED AS FOLLOWS: ORCHESTRA PIT, ALL ELEVATOR PITS, AND THE BELOW GRADE FLY-LOFT RIGGING PIT. PLEASE NOTE: XYPEX C-500 HAS BEEN CHOSEN AS A NEUTRAL MIX ADDITIVE THAT IS NOT INTENDED TO CHANGE THE CURRENTLY PLANNED CONCRETE SET TIME. IF FOR SOME REASON THE SET TIME IS DESIRED TO BE INCREASED OR DECREASED XYPEX DOES HAVE ALTERNATIVE FORMULATIONS WHICH MAY BE USED; HOWEVER, THE GC MUST GET WRITTEN APPROVAL FROM THE EOR PRIOR TO ANY CHANGE IN THE XYPEX C-500 FORMULATION. THE XYPEX C-500 IS AN ADDITIONAL MOISTURE INTRUSION MITIGATION MEASURE THAT IS REQUIRED IN ADDITION TO THE SPECIFIED WATERSTOPS NOTED IN THE OTHER GENERAL NOTES AND DETAILS RELATED TO CONCRETE COLD-JOISTS AND OTHER CONCRETE TRANSITIONS OF PLANE.

CAST-IN-PLACE CONCRETE:

1. CONCRETE SUPPLIER SHALL BE AWARE OF CEMENTS THAT CAN CAUSE LATE ETTRINGITE FORMATION IN THE CEMENT PASTE AND BE PREPARED TO SHOW THAT THE CEMENTS USED WILL NOT CAUSE THIS PROBLEM.
2. ALL MIXING, TRANSPORTING, PLACING AND CURING OF CONCRETE SHALL BE DONE IN ACCORDANCE WITH THE RECOMMENDATIONS OF THE AMERICAN CONCRETE INSTITUTE; ACI 301 AND ACI 318, LATEST EDITIONS.
3. NO HORIZONTAL JOINTS WILL BE PERMITTED IN CONCRETE EXCEPT WHERE THEY NORMALLY OCCUR OR WHERE SHOWN ON THE DETAILS. VERTICAL JOINTS SHALL OCCUR AT CENTER SPANS OR AT LOCATIONS APPROVED BY THE STRUCTURAL ENGINEER.
4. ALL MIXING, TRANSPORTING, PLACING AND CURING OF CONCRETE SHALL BE DONE IN ACCORDANCE WITH THE RECOMMENDATIONS OF THE AMERICAN CONCRETE INSTITUTE; ACI 301 AND ACI 318, LATEST EDITIONS.
5. ALL BASE PLATES AND ANCHOR BOLTS SHALL BE PROTECTED WITH 3" (MIN.) OF CONCRETE. ANCHOR BOLTS SHALL BE FABRICATED FROM FULL BODIED ASTM F1554, GRADE 36 LOW CARBON STEEL RODS HAVING THE SAME DIAMETER AS THE BOLT DIAMETER AND USING CUT THREADS. ROLLED THREADS ARE NOT ACCEPTABLE. BOLTS SHALL BE SET USING RIGID TEMPLATES.
6. AT HORIZONTAL CONCRETE FRAMING, FORMS SHALL NOT BE REMOVED UNTIL THE CONCRETE HAS REACHED 70 PERCENT OF THE 28-DAY COMPRESSIVE STRENGTH INDICATED. FLOOR SLABS AND BEAMS SHALL REMAIN SHORED UNTIL THE UPPER MOST LEVEL OF CONCRETE HAS REACHED 70 PERCENT OF THE 28-DAY COMPRESSIVE STRENGTH. FOR BUILDINGS WITH MORE THAN THREE STORIES IN HEIGHT, SHORING SHALL BE MAINTAINED FOR THREE LEVELS BELOW, UNTIL THE UPPER MOST LEVEL HAS REACHED 70 PERCENT OF THE SPECIFIED 28-DAY COMPRESSIVE STRENGTH.
7. ALL CONDUITS AND PIPES EMBEDDED IN CONCRETE SHALL COMPLY WITH ALL PROVISIONS SPECIFIED IN ACI 318,SECTION 26.8, WITH THE FOLLOWING SPECIFIC REQUIREMENTS:
    A. THE MAXIMUM OUTSIDE DIAMETER OF THE CONDUITS AND PIPES SHALL BE 1 1/2". NONE PERMITTED IN SLABS THINNER THAN 4 1/2".
    B. THE MINIMUM CLEAR DISTANCE BETWEEN CONDUITS AND PIPES SHALL BE 6".
    C. NONE PERMITTED IN SLABS-ON-GRADE WHICH WILL BE PERMANENTLY EXPOSED OR SCHEDULED TO RECEIVE THIN SET TILE. PLACE ALL PIPES AND CONDUITS IN THE FILL BENEATH THE VAPOR BARRIER. RE-COMPACT AS SPECIFIED.
    D. IN NON-EXPOSED SLABS-ON-GRADE, LIMIT SIZE TO 1" O.D. IN 5" SLAB SPACE 12" APART AND TIE TO UNDERSIDE OF REINFORCING MAT. WHERE LINES CONVERGE AT SOURCE, DOUBLE UP THE SLAB REINFORCING IN THE CONVERGENCE ZONE AND 3'-0" BEYOND. PLACE ALL LARGER LINES IN THE FILL BENEATH THE VAPOR BARRIER.
    E. NONE PERMITTED IN COLUMNS WITHOUT PRIOR APPROVAL.
    F. DO NOT DISPLACE REINFORCING STEEL FROM ITS PROPER POSITION.
8. PROVIDE SHEAR KEYS IN ALL CONSTRUCTION JOINTS IN BEAMS AND WALLS, IN ACCORDANCE WITH THE TYPICAL CONCRETE DETAILS.
9. PLACE WATERSTOPS IN ALL EXTERIOR CONSTRUCTION JOINTS BELOW GRADE AND ELSEWHERE AS CALLED FOR.
10. FLOORS ARE NOT DESIGNED TO SUPPORT FORMWORK AND WET CONCRETE WEIGHT OF NEXT LEVEL. CONTRACTOR SHALL DESIGN AND PROVIDE RE-SHORING TO PREVENT OVERSTRESSING THE STRUCTURE.
11. SET FORMS TO FOLLOW SLOPES AND GRADES DEFINED ON PLAN, KEEPING MEMBER DEPTHS CONSTANT AT DEPTHS DETAILED OR SCHEDULED, UNLESS NOTED OTHERWISE. SLOPE UNIFORMLY BETWEEN ELEVATIONS GIVEN. BUILD IN CAMBER WHERE SPECIFIED.
12. CONSTRUCTION JOINTS PERMITTED ONLY WHERE INDICATED ON DRAWINGS. WHERE NOT SPECIFICALLY INDICATED ON DRAWINGS, LOCATE THE JOINTS AS FOLLOWS:
    A. LOCATE JOINTS NOT INDICATED TO LEAST IMPAIR STRENGTH AND APPEARANCE OF STRUCTURE. LOCATE VERTICAL JOINTS IN MIDDLE THIRD OF SPANS OF NON-POST-TENSIONED SLABS, BEAMS OR GIRDERS, UNLESS A BEAM INTERSECTS A GIRDER AT MIDDLE LOCATION, IN WHICH CASE OFFSET JOINTS IN GIRDERS TWICE WIDTH OF BEAM. LOCATE VERTICAL JOINTS WITHIN THE END THIRD OF SPANS OF POST TENSIONED CONTINUOUS SLABS, BEAMS OR GIRDERS WHERE TENDON PROFILE IS AT OR NEAR THE CENTROID OF THE CONCRETE CROSS SECTION.
    B. LOCATE HORIZONTAL JOINTS IN WALLS AND COLUMNS AT UNDERSIDE OF SUPPORTED ELEMENTS AT THE TOP OF THE WALL OR COLUMN AND AT THE TOP OF FOOTINGS OR FLOOR SLABS AT THE BOTTOM OF THE WALL OR COLUMN. ROUGHEN SURFACE OF HORIZONTAL OR NEARLY HORIZONTAL CONSTRUCTION JOINTS SO THAT AGGREGATE SHALL BE EXPOSED UNIFORMLY, LEAVING NO LAITANCE, LOOSENED PARTICLES OR DAMAGED CONCRETE.
    C. REFER TO PLANS FOR JOINTS IN GRADE SUPPORTED SLABS.
    D. JOINTS ARE NOT ALLOWED BETWEEN PILASTERS AND BEAM/WALL THAT ARE MONOLITHIC.
    E. SUBMIT CONSTRUCTION JOINT LAYOUT PLANS FOR APPROVAL BY THE ENGINEER PRIOR TO CONSTRUCTION.
13. *****GC NOTE*****
    A. AT ALL CONCRETE COLD JOINTS OR TRANSITIONS BETWEEN PLANES: VERTICAL TO VERTICAL POURS, HORIZONTAL TO HORIZONTAL POURS, HORIZONTAL TO VERTICAL POURS, AND VERTICAL TO HORIZONTAL POURS, THE GC SHALL PROVIDE A CONTINUOUS WATER STOP WITHIN EACH JOINT. WATERSTOP MANUFACTURERS AND TYPES SHALL BE AS APPROVED IN THE SPECS AND THE GENERAL NOTES. ALL WATER STOPS MUST BE APPROPRIATE FOR THE CONDITION BASED ON THE MANUFACTURER'S DATA. THE GC SHALL BE IN STRICT COMPLIANCE WITH ALL MANUFACTURERS' USE, HANDLING, AND INSTALLATION INSTRUCTIONS. AT A MINIMUM, THE GC SHALL ASSUME A DUMBBELL-TYPE WATER STOP WITH WINGS THAT EXTEND TO EACH SIDE OF THE CONCRETE FOR EACH JOINT UNLESS OTHERWISE NOTED WITHIN THE CD'S TO BE AN ALTERNATE ACCEPTABLE WATER STOP TYPE.
    B. ADDITIONALLY, CONCRETE USED AT A SLAB DEPRESSION WITH A DEPTH GREATER THAN 6 INCHES, THE CONCRETE ADDITIVE XYPEX C-500 SHALL BE INCLUDED IN THE CONCRETE MIX. REFER TO CONCRETE MIX SCHEDULE FOR CONCRETE MIXES WHICH MAY REQUIRE XYPEX C-500 AND CONCRETE MIX NOTE 10 FOR ADDITIONAL INFORMATION.

CONCRETE REINFORCEMENT:

1. REINFORCING STEEL SHALL CONFORM TO ASTMA615. BARS SHALL BE NEW OR RECYCLED DOMESTIC BILLET STEEL OF A DOMESTIC MANUFACTURE. REINFORCING BARS SIZE #3 THROUGH #10 SHALL BE GRADE 60. REINFORCING BARS SIZE #11 THROUGH #18 SHALL BE GRADE 75.
2. DEFORMED BAR ANCHORS SHALL CONFORM TO ASTM A496, GRADE 70.
3. ALL WELDED WIRE FABRIC SHALL BE SMOOTH WIRE FABRIC CONFORMING TO ASTM A185, AND SHALL BE FURNISHED IN FLAT SHEETS.
4. CONCRETE COVERAGE AROUND REINFORCEMENT SHALL CONFORM TO THE REQUIREMENTS OF ACI 318 SECTION 20.6, LATEST EDITION, AND MEET REQUIREMENTS BELOW. THE REINFORCING STEEL DETAILER SHALL ADJUST REINFORCING STEEL CAGE SIZES AT INTERSECTING REINFORCING MEMBERS AS REQUIRED TO ALLOW CLEARANCE FOR INTERSECTING BARS. SLAB ON GRADE REINFORCEMENT SHALL BE SUPPORTED AT EVERY THIRD BAR, NOT TO EXCEED 45-INCH INTERVALS.

FOOTINGS/PIERS	3 IN
GRADE BEAMS	3 IN BOT; 2 IN SIDES (3" IF CAST AGAINST SOIL), 2 IN TOP
SLAB ON GRADE	2 IN TOP
SLAB BOTTOMS OVER VOID FORM	4—
COLUMNS NOT EXPOSED TO WEATHER OR IN CONTACT WITH THE GROUND (TYP INTERIOR CONDITIONS)	1 5/8"

5. DETAILING OF CONCRETE REINFORCEMENT AND ACCESSORIES SHALL CONFORM TO ACI 315, LATEST EDITION. ALL HOOKED BARS SHOWN SHALL HAVE STANDARD HOOKS, U.N.O.
6. REINFORCING SHALL NOT BE WELDED WITHOUT APPROVAL FROM THE STRUCTURAL ENGINEER.
7. BOTTOM REINFORCING BARS SHALL BE SPLICED AT SUPPORTS AND CONTINUOUS TOP BARS SHALL BE SPLICED AT MID-SPAN PER 8/S-302.
8. WHERE BAR TYPES FROM THE BAR BENDING DIAGRAM ARE SPECIFIED, PROVIDE BARS ACCORDINGLY. OTHERWISE, DETAIL BARS IN BEAMS, COLUMNS, SLABS, AND WALLS PER 8/S-302.
9. PLACE BARS NOTED AS "2ND LAYER" BELOW THE PRIMARY TOP BARS (OR ABOVE THE PRIMARY BOTTOM BARS) AND PROVIDE #11 SPACER BARS PLACED AT INTERVALS OF 4'-0" BETWEEN THE TWO LAYERS OF BARS.
10. PROVIDE CORNER BARS FOR EACH HORIZONTAL BAR AT THE INSIDE AND OUTSIDE FACES OF INTERSECTING BEAMS OR WALLS. REFER TO TYPICAL CORNER BAR DETAIL ON 5/S-302.

CONCRETE FINISHES:

GC NOTE FOR EXPOSED CONCRETE FINISH

1. ALL SLAB AREAS WITH EXPOSED CONCRETE (INCLUDING STAINED OR SEALED CONCRETE, EPOXY COATING FINISH, POLISHED CONCRETE, ETC) FINISH SHALL HAVE THE ADDITIONAL PERFORMANCE CRITERIA AS NOTED BELOW.
    - SLAB FLATNESS SHALL BE 40
    - SLAB LEVELNESS SHALL BE 35
    - THE SLAB SHALL RECEIVE SIKAFLOOR 956 LD AS A CONCRETE SURFACE DENSIFIER TO INCREASE DURABILITY OF THE SLAB SURFACE FROM IMPACTS AND SIMILAR HEAVY USE.
    - THE SLAB SHALL RECEIVE SIKAFLOOR 958 PG AS A CONCRETE SURFACE SEALER. IF SLAB FINISH IS INTENDED TO BE GROUND / POLISHED THIS WOULD BE INSTALLED AFTER POUR AND BEFORE GRINDING.
2. FOR AREAS WHERE THE FINAL ARCHITECTURAL FINISH IS STAINED OR SEALED CONCRETE, THE GC IS RESPONSIBLE FOR PLANNING OUT THE CONTRACTION JOINT / SAW-CUT JOINT LOCATIONS IN ADVIANCE OF THE POUR AND PROVIDE DISCONTINUOUS BARS AT EVERY OTHER BAR ON CENTER ALONG THE JOINT. THE GC SHALL ENSURE THE JOINT FORMS A STRAIGHT LINE FOLLOWING THE PLANNED SAW-CUT, AND THE GC SHALL ONLY HOLD BACK THE REINFORCEMENT 1" FROM EACH SIDE OF THE JOINT. THIS PROCEDURE MUST BE FOLLOWED FOR ALL JOINTS IN BOTH DIRECTIONS FOR THE SLABS THAT WILL BE STAINED OR SEALED CONCRETE AS THE FINAL FINISH. THE GC SHALL FOLLOW IN STRICT COMPLIANCE WITH ALL MANUFACTURER'S INSTALLATION PROCEDURES, BOTH FOR PREP AND INSTALLATION FOR ANY PRODUCT THAT IS USED.
3. FOR AREAS WHERE THE FINAL ARCHITECTURAL FINISH IS EPOXY COATING DIRECTLY APPLIED ON TOP OF THE CONCRETE, THE GC MUST PLAN TO ROUTE OUT AND INFILL ALL CRACK LOCATIONS WITH A FULLY RIGID FILLER MANUFACTURED FOR THE PURPOSE OF FILLING TYPICAL SHRINKAGE CRACKS IN CONCRETE. IT MUST BE AT THE CONTRACTOR'S DISCRETION WHETHER TO PROVIDE 1/2 THE SLAB BARS AS DISCONTINUOUS AT THESE EPOXY CONDITIONS OR TO RUN ALL BARS THROUGH AND THEN ROUTE AND FILL SHRINKAGE CRACKS. THE GC SHALL FOLLOW IN STRICT COMPLIANCE WITH ALL MANUFACTURER'S INSTALLATION PROCEDURES, BOTH FOR PREP AND INSTALLATION FOR ANY PRODUCT THAT IS USED.
4. FOR AREAS WITH A POLISHED CONCRETE FINISH, THE FOLLOWING CRITERIA MUST BE ADHERED TO: (TYP ALL AREAS)

4.1. RUN HALF OF THE REINFORCEMENT BARS DISCONTINUOUS AT CONTROL JOINTS IN THE SLAB-ON-GRADE TO HELP CONTROL CRACKING. ENSURE THAT SMOOTH DOWEL BARS ARE PROPERLY PLACED AT THESE JOINTS TO ALLOW FOR LOAD TRANSFER WHILE PERMITTING CONTROLLED MOVEMENT. SAW CUTS SHOULD BE MADE AT THE APPROPRIATE DEPTH (MINIMUM 1/4 OF SLAB THICKNESS) AND SPACING SHOULD NOT EXCEED 8'-0" TO MINIMIZE UNCONTROLLED CRACKING.

4.2. GC SHALL COORDINATE THE LOCATION OF THE EXPOSED CONCRETE FINISH WITH ARCH DRAWINGS.

4.3. GC PROVIDE 1 3/8" CONCRETE COVER AT TOP OF SLAB ON GRADE INSTEAD OF 2" CLEAR CONCRETE.

4.4. FINISHING PROCESS:
- INITIAL SCREEDING AND BULL FLOATING TO MAINTAIN UNIFORMITY.
- AVOID EXCESSIVE TROWELLING-MACHINE FINISH BEFORE SLAB BEGINS SETTING.
- NO HARD TROWELLING, WHICH CAN SEAL THE SURFACE AND AFFECT POLISHING.

4.5. CURING PROCESS METHOD FOR POLISHED CONCRETE AREAS:

PREFERRED OPTION: CURING COMPOUND & DENSIFIER COMBO
- APPLY A LITHIUM SILICATE CURING COMPOUND IMMEDIATELY AFTER FINISHING TO HELP WITH MOISTURE RETENTION.
- DENSIFIER (LITHIUM SILICATE OR SODIUM SILICATE) SHOULD BE APPLIED AFTER THE SLAB CURES FOR 14-28 DAYS. THIS HELPS HARDEN THE SURFACE BEFORE POLISHING.

ALTERNATIVE: WET CURING
- 7 DAYS OF WET CURING VIA FLOODING WITH WATERPROOF FORMS, A MINIMUM OF 3" ABOVE THE SLAB
- AVOID UNEVEN WATER EXPOSURE TO PREVENT DISCOLORATION IN POLISHED AREAS.

AVOID THESE METHODS:
- TRADITIONAL CURING COMPOUNDS THAT LEAVE A THICK FILM, AS THEY INTERFERE WITH POLISHING.

4.6. COLUMN BLOCK-OUTS
USING ROUND BLOCKOUTS INSTEAD OF DIAMOND IS RECOMMENDED, AS IT REDUCES STRESS CONCENTRATION AND MINIMIZES CRACKING. DO NOT PROVIDE KEYWAY AND DO NOT DOWEL BETWEEN SLAB ON GRADE AND CONCRETE BLOCKOUT. REF DETAIL 4—303.

4.7. MAXIMUM ALLOWABLE GRIND DEPTH: 1/4"

4.8. AGGREGATE SIZE: A UNIFORM AGGREGATE SIZE OF 3/8" TO 1/2" IS RECOMMENDED. THIS SIZE ENSURES A CONSISTENT AND AESTHETICALLY PLEASING EXPOSURE WHILE MAINTAINING DURABILITY. GC COORD WITH ARCH. IF THE PROJECT REQUIRES A FULL AGGREGATE EXPOSURE, LARGER AGGREGATES (UP TO 3/4") CAN BE USED, BUT THEY REQUIRE DEEPER GRINDING. FOR SALT-AND-PEPPER EXPOSURE, SMALLER AGGREGATES (AROUND 3/8") ARE PREFERABLE. GC COORDINATE WITH ARCH REGARDING DESIRED AGGREGATE SIZE. ADDITIONALLY, WELL-GRADED AGGREGATES (PER ASTM C33) RECOMMENDED TO MINIMIZE SHRINKAGE AND CRACKING.

4.9. FINAL POLISH: PROGRESSIVELY FINER GRITS (E.G., 200, 400, 800, 1500, 3000) PER ARCHITECT'S SPECIFICATION.

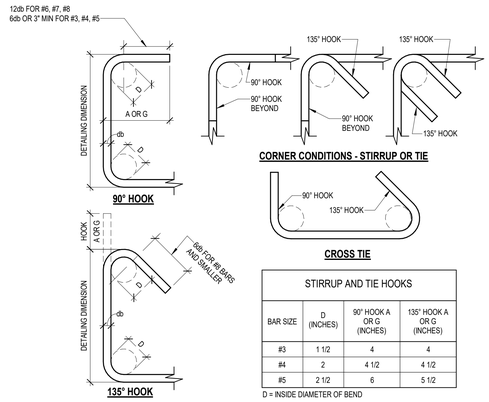

STIRRUP AND TIE HOOKS			
BAR SIZE	D (INCHES)	90° HOOK A OR G (INCHES)	135° HOOK A OR G (INCHES)
#3	1 1/2	4	4
#4	2	4 1/2	4 1/2
#5	2 1/2	6	5 1/2

D = INSIDE DIAMETER OF BEND

1 TYPICAL STIRRUP AND TIE HOOK TYPES
NO SCALE

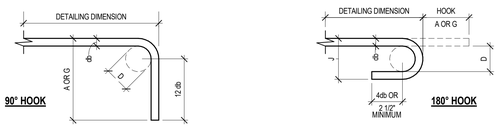

END HOOK DIMENSIONS				
BAR SIZE	FINISHED BEND DIAMETER D, (INCHES)	180° HOOKS		90° HOOK
		A OR G, (INCHES)	J, (INCHES)	A OR G, (INCHES)
#3	2 1/4	5	3	6
#4	3	6	4	8
#5	3 3/4	7	5	10
#6	4 1/2	8	6	12
#7	5 1/4	10	7	14
#8	6	11	8	16
#9	9 1/2	15	11 3/4	19
#10	10 3/4	17	13 1/4	22
#11	12	19	14 3/4	24
#14	18 1/4	27	21 3/4	31
#18	24	36	28 1/2	41

D = INSIDE DIAMETER OF BEND

2 TYPICAL END HOOK TYPE
NO SCALE

DEVELOPMENT LENGTHS OF STANDARD HOOKS IN TENSION GRADE 60 REINFORCEMENT, NORMALWEIGHT CONCRETE							
BAR SIZE	fc = 3000 PSI		fc = 4000 PSI		fc = 5000 PSI		BAR SIZE
	Lhb	0.7 Lhb	Lhb	0.7 Lhb	Lhb	0.7 Lhb	
#3	9	7	8	6	7	6	#3
#4	11	8	10	7	9	7	#4
#5	14	10	12	9	11	8	#5
#6	17	12	15	11	13	10	#6
#7	20	14	17	12	15	11	#7
#8	22	16	19	14	17	12	#8
#9	25	18	22	16	20	14	#9
#10	28	20	25	18	22	16	#10
#11	31	22	27	19	24	17	#11
#14	38	-	33	-	29	-	#14
#18	50	-	43	-	39	-	#18

NOTES:
1. Ldh = DEVELOPMENT LENGTH OF STANDARD HOOKS IN TENSION (INCHES).
2. Ldh = Lhb UNLESS CONDITIONS OF NOTE 3 ARE SATISFIED.
3. Ldh = 0.7Lhb FOR #11 BARS AND SMALLER WHEN SIDE COVER (NORMAL TO PLANE OF HOOK) IS NOT LESS THAN 2 1/2 INCHES AND FOR 90° HOOKS COVER ON BAR EXTENSION BEYOND HOOK IS NOT LESS THAN 2 INCHES.
4. HOOKS ARE NOT CONSIDERED EFFECTIVE FOR DEVELOPING BARS IN COMPRESSION.
5. Ldh SHALL BE MULTIPLIED BY 1.2 FOR EPOXY-COATED HOOKED REINFORCING BARS.

3 TYPICAL DEVELOPMENT LENGTHS OF STANDARD HOOKS IN TENSION
NO SCALE

TENSION DEVELOPMENT AND LAP SPLICE LENGTHS (CLASS B) GRADE 60 REINFORCEMENT NORMAL WEIGHT CONCRETE						
BAR SIZE	fc = 3000 PSI		fc = 4000 PSI		fc = 5000 PSI	
	TYP BARS	OTHER BARS	TYP BARS	OTHER BARS	TYP BARS	OTHER BARS
#3	28"	22"	24"	19"	22"	17"
#4	37"	29"	32"	25"	29"	22"
#5	47"	36"	40"	31"	36"	28"
#6	56"	43"	48"	37"	43"	33"
#7	81"	63"	70"	54"	63"	49"
#8	93"	72"	80"	62"	72"	55"
#9	105"	81"	91"	70"	81"	63"
#10	118"	91"	102"	79"	91"	70"
#11	131"	101"	113"	87"	101"	78"

NOTES:
1. THE CLASS B TENSION LAP SPLICE SCHEDULE SHOWN IS FOR NORMAL WEIGHT CONCRETE AND GRADE 60 NON-EPOXY-COATED REINFORCING.
2. TYPICAL BARS ARE FOR BEAM TOP AND INTERMEDIATE BARS, WALL TOP AND HORIZONTAL BARS, AND SLAB/FOOTING TOP BARS FOR SLAB/FOOTING THICKNESS GREATER THAN 13". OTHER BARS ARE FOR ANY BAR THAT DOES NOT HAVE MORE THAN 12" OF FRESH CONCRETE BELOW THE BAR. ALL TYPICAL BARS SHALL HAVE MORE THAN 12" OF FRESH CONCRETE BELOW THE BAR.
3. FOR EPOXY-COATED BARS, MULTIPLY THE TABULATED SPLICE LENGTHS OF TYPICAL BARS BY 1.3 AND THE TABULATED SPLICE LENGTHS OF OTHER BARS BY 1.5.
4. FOR LIGHTWEIGHT CONCRETE, MULTIPLY THE TABULATED SPLICE LENGTHS BY 1.33.
5. FOR GRADE 75 BARS, MULTIPLY THE TABULATED SPLICE LENGTHS BY 1.25.
6. FOR #7 TO #11 SLAB OR WALL REINFORCING WITH CLEAR COVER LESS THAN 1 BAR DIAMETER, MULTIPLY THE TABULATED SPLICE LENGTHS BY 1.5.
7. SPLICE LENGTH FOR BARS OF DIFFERENT SIZE SHALL BE THE GREATER OF SPLICE LENGTH/1.3 OF THE LARGER BAR AND SPLICE LENGTH OF THE SMALLER BAR.
8. FOR CONCRETE STRENGTH IN BETWEEN THOSE SHOWN IN THE SCHEDULE, USE SPLICE LENGTHS OF THE LOWER CONCRETE STRENGTH.
9. THE SCHEDULED LAP SPLICE LENGTH WITH THE APPLICABLE MODIFICATION FACTORS SHALL NOT BE LESS THAN 12".

4 TYPICAL DEVELOPMENT AND LAP SPLICE LENGTHS
NO SCALE

Kubala ENGINEERS
Ph: (800)246-3674
www.kubalaengineers.com
TX. REG. NO. F-23612

PBK
www.pbk.com
TX FIRM: BR 1608
HOUSTON, TX
713-365-0608

PKG 3A GPHS - Fieldhouse

1000 Keene St.
Galena Park, TX 77547

CLIENT PROJECT NO: 240539

ISSUE FOR PROPOSAL

Galena Park ISD

KEY PLAN
NORTH: PLAN TRUE

STATE OF TEXAS
JOHN R. KUBALA
106120
06/10/2025
Kubala Engineers
F-23612

CLIENT	
Galena Park ISD	
DATE 06/10/2025	PROJECT NUMBER 240539

DRAWING HISTORY

No.	Description	Date

CHECKED BY: SI
DRAWN BY: CML

GENERAL CONCRETE AND STL REINF NOTES AND TYP DETAILS

S-300

Plot Stamp:
6/9/2025 5:32:21 PM

GENERAL SLAB-ON-GRADE NOTES AND TYP DETAILS
S-301
FOR BLUEBEAM LABELING/OCR:

SLAB-ON-GRADE:

1. INSTALL VAPOR BARRIER IN ACCORDANCE WITH SPECIFICATIONS AND MANUFACTURER'S RECOMMENDATIONS IMMEDIATELY BELOW SLAB. PROPERLY TAPE ALL SEAMS PER MANUFACTURER'S RECOMMENDATIONS AND REMOVE ANY REMOVE STANDING WATER ON THE SURFACE OF VAPOR BARRIER PRIOR TO CONCRETE PLACEMENT.
2. PROVIDE (2)-#5 x 5'-0" LONG BAR IN SLAB AT RE-ENTRANT CORNERS, TYPICAL. INCLUDING RE-ENTRANT CORNERS AROUND THE PERIMETER OF THE BUILDINGS, FLOOR RECESSES AND OPENINGS.
3. PROVIDE CONTROL JOINTS ALONG COLUMN LINES AND AT 15'-0" ON CENTER, EACH WAY, MAXIMUM, UNLESS NOTED OTHERWISE. ALSO, PROVIDE ADDITIONAL CONTROL JOINTS AT RE-ENTRANT CORNERS. SEE TYPICAL DETAILS.
4. JOINT FILLER SHALL BE USED ON ALL JOINTS THAT DO NOT GET COVERED BY AN ARCHITECTURAL FLOOR COVERING. ACCEPTABLE PRODUCTS INCLUDE EDGE PRO 90. STRICTLY FOLLOW MANUFACTURER-WRITTEN RECOMMENDATIONS FOR INSTALLATION. DELAY JOINT FILLING AS LONG AS PRACTICAL TO ALLOW FOR MAXIMUM CONCRETE SHRINKAGE.
5. DO NOT PLACE HEAVY EQUIPMENT OR CONSTRUCTION STORAGE LOADS ON THE SLAB UNLESS CALCULATIONS PREPARED BY A STRUCTURAL ENGINEER LICENSED TO PRACTICE IN THE STATE IN WHICH THE PROJECT IS LOCATED HAVE BEEN SUBMITTED, VERIFYING THE ADEQUACY OF THE SLAB.
6. TESTING LAB WILL TEST ALL PLACEMENTS IN ACCORDANCE WITH ASTM E 1155 TO CONFIRM F-NUMBERS AND ADEQUACY OF FINISHING PROCEDURES.
7. THE PERFORMANCE OF THE SLAB IS HIGHLY DEPENDENT ON HOW WELL THE CONTRACTOR FOLLOWS THE BUILDING PAD PREPARATION RECOMMENDATIONS AS SPECIFIED IN THE GEOTECHNICAL REPORT AND EARTHWORK SECTION OF THE GENERAL NOTES. THE CONTRACTOR AND OWNER SHOULD CONSULT WITH THE GEOTECHNICAL ENGINEER IF THERE ARE ANY QUESTIONS CONCERNING DESIGN, CONSTRUCTION METHODS, PERFORMANCE AND RISKS INVOLVED IN THE CONSTRUCTION OF A GRADE SUPPORTED SLAB.
8. SLAB REINFORCEMENT SHALL BE CHAIRED BY SOIL SUPPORTED SLAB BOLSTERS.

GEO-FOAM WITH CONCRETE TOPPING:

1. ALL EPS GEO-FOAM SHALL BE PER ASTM D6817 AND TYPE EPS 19 (MIN DENSITY - 1 PCF) OR BETTER.REFER TO EPS GEOFOAM SCHEDULE FOR EPS GEO-FOAM GRADE BASED STACKED THICKNESS.
2. U.N.O. ON PLANS/DETAILS ALL GEO-FOAM SHALL BE FINISHED WITH 4" THICK CONCRETE TOPPING SLAB WITH #3 AT 12" O.C. EACH WAY CENTERED IN THE SLAB.
3. CONSTRUCTION JOINTS SHALL BE FOLLOWED PER PLANS. ADJACENT POURS SHOULD BE SCHEDULED MINIMUM 4 DAYS APART.
4. ALL GEO-FOAM SHALL BE ADHERED TO THE BASE SLAB AND TO EACH OTHER WITH A NON-SOLVENT ADHESIVE WITH A MINIMUM SHEAR STRENGTH OF 5 PSF.

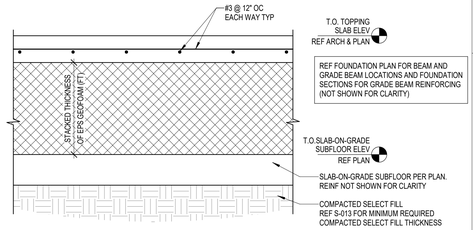

EPS GEOFOAM SCHEDULE

STACKED THICKNESS OF EPS GEOFOAM (FT)	MIN EPS GEOFOAM DENSITY (PCF)	1% COMPRESSIVE RESISTANCE, MIN (PSI)	EQUIVALENT EPS TYPE	TRANSVERSEMAX EXPECTED TOTAL AMOUNT OF CONSOLIDATION (W/ 4" NWC TOPPING SLAB) BOT REINF.
UP TO 2'-6"	1.15	5.8	EPS19	1/4"
>2'-6" TO 3'-3"	1.35	7.3	EPS22	1/4"
>3'-3" TO 4'-10"	1.8	10.9	EPS29	1/4"
>4'-10" TO 6'-6"	2.4	15.0	EPS39	1/4"
>6'-6" TO 8'-0"	2.85	18.6	EPS46	1/4"

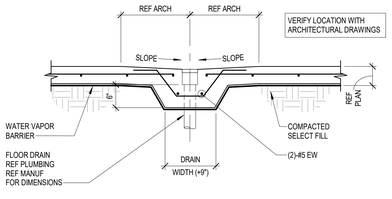

4 FLOOR DRAIN DETAIL
NO SCALE

NOTE:
1. PROVIDE EXTRA HORIZ REINF AT EACH SIDE OF DRAIN EQUAL TO REINFORCING INTERRUPTED BY DRAIN DEPRESSION.

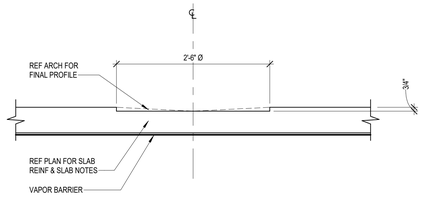

5 TYPICAL SLAB RECESS AT RESTROOM DRAIN
NO SCALE

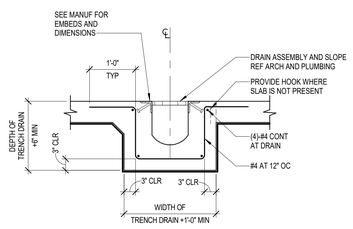

10 TYPICAL TRENCH DRAIN AT SLAB-ON-GRADE
NO SCALE

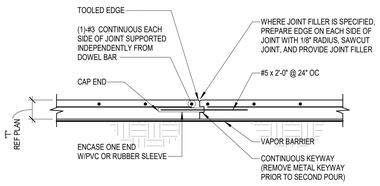

NOTES:
1. AT CONTRACTOR'S OPTION, CONTRACTION JOINT MAY BE USED IN PLACE OF CONSTRUCTION JOINT LOCATIONS SHALL BE PROPOSED BY THE CONTRACTOR AND APPROVED BY THE ARCHITECT.
2. CONTRACTION JOINT MAYBE BE SAW CUT TO 1/4 OF THE SLAB DEPTH WITHIN 6 HOURS AFTER SLAB PLACEMENT.

1 SLAB CONSTRUCTION JOINT
NO SCALE

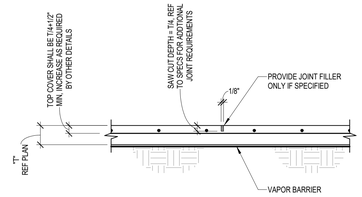

NOTES:
1. PROVIDE JOINT AT EVERY COLUMN LINE AND IN BETWEEN THE COLUMN LINES AT A MAXIMUM SPACING OF 36 TIMES THE SLAB THICKNESS (NOT TO EXCEED 16 FEET); UNO.
2. GC SHALL SUBMIT JOINT LAYOUT TO THE ARCHITECT FOR APPROVAL.
3. AT ALL EXPOSED CONCRETE AREAS, RUN HALF OF THE REINFORCEMENT BARS DISCONTINUOUS AT CONTROL JOINTS IN THE SLAB-ON-GRADE TO HELP CONTROL CRACKING. ENSURE THAT SMOOTH DOWEL BARS ARE PROPERLY PLACED AT THESE JOINTS TO ALLOW FOR LOAD TRANSFER WHILE PERMITTING CONTROLLED MOVEMENT.
4. AT POLISHED CONCRETE AREAS, SAW CUTS SPACING SHOULD NOT EXCEED 8'-0" TO MINIMIZE UNCONTROLLED CRACKING.

2 CONTRACTION (CONTROL) JOINT
NO SCALE

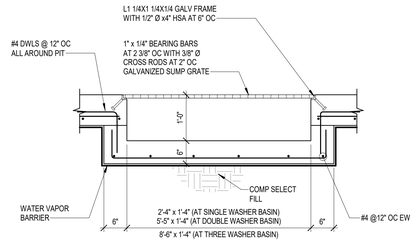

3 DRAIN TROUGH DETAIL
NO SCALE

NOTE:
1. GC SHALL COORDINATE DEPTH AND LOCATION OF ALL FLOOR DEPRESSIONS WITH THE ARCHITECTURAL DRAWINGS.

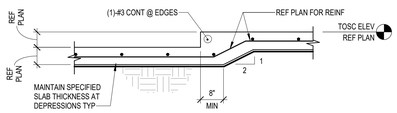

SLAB RECESS LESS THAN 3" DEEP

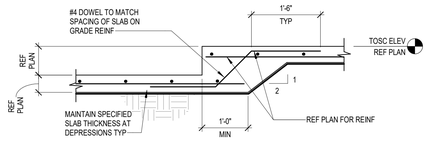

SLAB RECESS 3" TO 10" DEEP

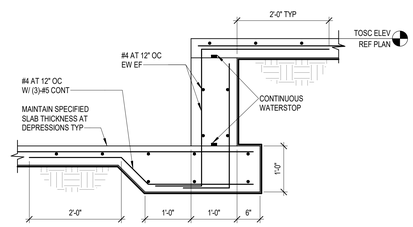

SLAB RECESS 10" TO 36" DEEP

6 TYPICAL SLAB DEPRESSION DETAILS
NO SCALE

NOTE:
1. GC SHALL COORDINATE CURB SIZES AND LOCATIONS WITH ARCH DRAWINGS.

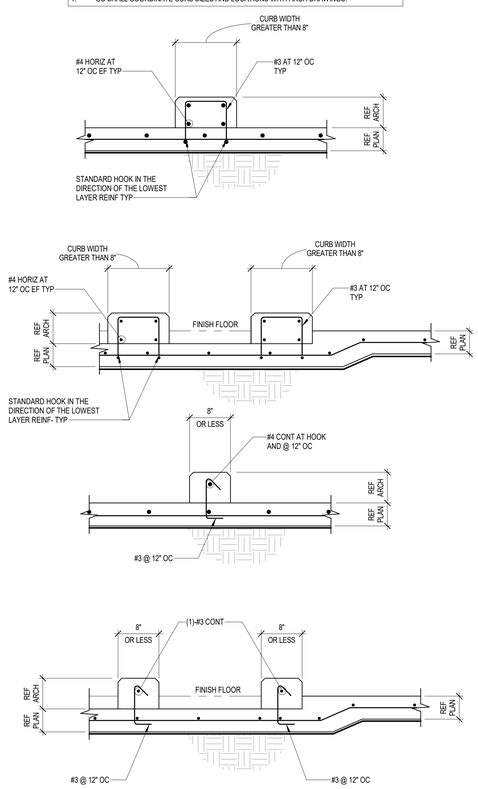

7 TYPICAL CURB DETAILS
NO SCALE

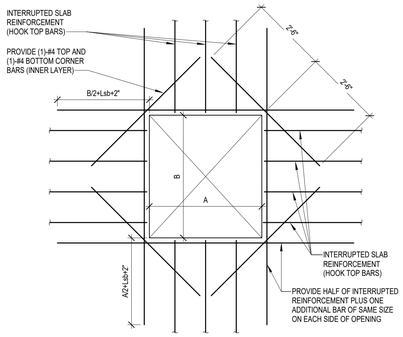

NOTES:
1. Lsb EQUALS BAR "CLASS B" TENSION LAP SPLICE LENGTH, UNLESS NOTED OTHERWISE.
2. SLAB OPENINGS ARE ONLY PERMITTED WHERE INDICATED ON THE STRUCTURAL PLANS OR AS APPROVED BY THE STRUCTURAL ENGINEER.

8 TYPICAL SLAB OPENING REINFORCEMENT
NO SCALE

NOTE:
1. FABRICATOR TO LOCATE THESE BARS ON THE SHOP DRAWINGS.

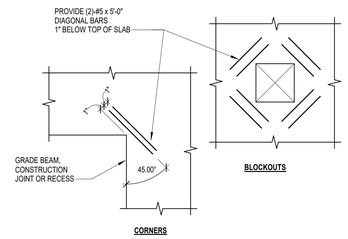

9 TYPICAL RE-ENTRANT CORNER BARS DETAIL
NO SCALE

11 TYPICAL VOLLEYBALL POLE INSERT
NO SCALE

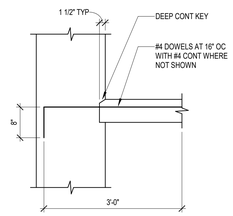

12 TYPICAL WALL TO SLAB CONSTRUCTION JOINT
NO SCALE

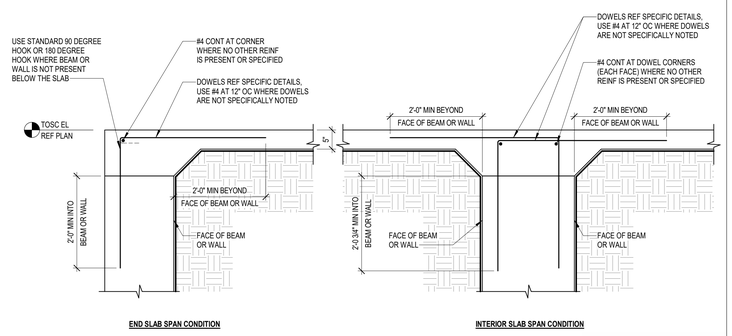

13 TYPICAL SLAB DOWEL
NO SCALE

Kubala ENGINEERS
Ph: (900)246-3074
www.kubalaengineers.com
TX. REG. NO. F-23612

PBK
www.pbk.com
TX FIRM: BR 1608
HOUSTON, TX
713-365-0608

PKG 3A GPHS - Fieldhouse

1000 Keene St,
Galena Park, TX 77547

CLIENT PROJECT NO: 240539

ISSUE FOR PROPOSAL

KEY PLAN
NORTH: PLAN TRUE

STATE OF TEXAS
JOHN R. KUBALA
106120
06/10/2025
Kubala Engineers
F-23612

CLIENT	
Galena Park ISD	
DATE 06/10/2025	PROJECT NUMBER 240539

DRAWING HISTORY

No.	Description	Date

CHECKED BY: SI
DRAWN BY: CML

GENERAL SLAB-ON-GRADE NOTES AND TYP DETAILS

S-301

Plot Stamp:
6/9/2025 5:32:21 PM

GENERAL GRADE BEAM NOTES AND TYP DETAILS
S-302

FOR BLUEBEAM LABELING/OCR:

GRADE BEAM:

1. GRADE BEAM DIMENSIONS AND/OR LOCATIONS SHALL NOT BE ALTERED WITHOUT APPROVAL OF THE ENGINEER OF RECORD. SIDES OF GRADE BEAMS SHALL BE FORMED. EARTH FORMING OF GRADE BEAMS IS NOT ALLOWED UNLESS GRADE BEAMS MAY BE EARTH FORMED SO LONG AS THE SIDES ARE PLUMB AND SOUND AND ANY PORTION OF THE BEAMS/SLAB THAT EXTENDS ABOVE GRADE/ EXPOSED IS BOARD FORMED. THE WALLS MUST NOT SLOUGH OFF MORE THAN 3/4" OUT OF PLANE OF THE PLUMB LINE. WHERE THIS OCCURS A BOARD FORM MAY BE LAID IN THE EARTH TO SMOOTH THE SIDE LOCALLY AT THE IMPERFECTION TO MAINTAIN WALL FLATNESS TOLERANCE.
2. GRADE BEAMS SHALL BE POURED MONOLITHICALLY AROUND CORNERS AND AT INTERSECTIONS. SEE TYPICAL GRADE BEAM CONSTRUCTION JOINT DETAIL FOR ACCEPTABLE CONSTRUCTION JOINT LOCATIONS.
3. GENERAL CONTRACTOR SHALL COORDINATE LOCATION, SIZE, AND ELEVATION AND INCLUDE IN HIS CONTRACT PRICE ALL REQUIRED HORIZONTAL PENETRATIONS THROUGH CONCRETE BEAMS WHETHER SHOWN ON STRUCTURAL DRAWINGS OR NOT. WHERE BEAM PENETRATIONS ARE REQUIRED BUT ARE NOT SPECIFICALLY DETAILED ON THE STRUCTURAL DRAWINGS, CONTRACTOR SHALL SUBMIT DRAWINGS SHOWING DIMENSIONS AND LOCATIONS OF ALL REQUIRED PENETRATIONS FOR REVIEW AND APPROVAL.

GRADE BEAM SCHEDULE

MARK	SIZE		REINFORCING			TIES		REMARKS
	WIDTH	DEPTH	TOP	BOTTOM	MIDDLE	SIZE	SPACING*	
GB1	1'-6"	2'-6"	3#9	3#9	-	#4 S1	1@2", R@10"; 1@2", R @ 6" @ CANTI	-
GB2	2'-0"	2'-6"	4#9	4#9	-	#4 S1	1@2", R@10"; 1@2", R @ 6" @ CANTI	-
GB3	2'-8"	2'-6"	5#9	5#9	-	#4 S1	1@2", R@10"; 1@2", R @ 6" @ CANTI	-
GB4	2'-10"	2'-6"	6#9	6#9	-	#4 D1	1@2", R@10"; 1@2", R @ 6" @ CANTI	-
GB5	3'-0"	2'-6"	6#9	6#9	-	#4 D1	1@2", R@10"; 1@2", R @ 6" @ CANTI	-
GB6	1'-2"	2'-6"	3#7	3#7	-	#4 S1	1@2", R@10"; 1@2", R @ 6" @ CANTI	-

* - REF DETAIL 4/S-302A OR TIE SPACING AT GRADE BEAM TO GRADE BEAM CONNECTION WHERE PIER/ FOOTING IS NOT PRESENT AT INTERSECTION. REF DETAIL 6/S-302A FOR TIES SPACING BELOW COLUMN WHERE PIER/ FOOTING IS NOT PRESENT BELOW COLUMN.

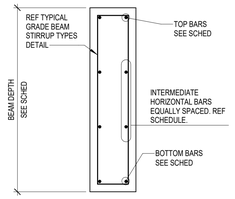

INTERMEDIATE BAR SCHEDULE

BEAM DEPTH	NUMBER OF BARS EA FACE	SIZE OF BAR
> 36" - 48"	5	#3
49" - 54"	5	#4
55" - 60"	5	#5
61" - 66"	6	#5
67" - 78"	7	#5
79" AND ABOVE	AT 9" OC	#5

1 GRADE BEAM SCHEDULE
NO SCALE

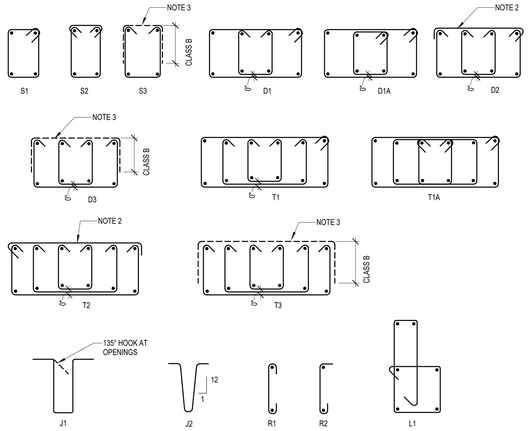

NOTES:
1. ALL HOOKS SHALL BE FABRICATED AS REQUIRED BY ACI. REFER TO "TYPICAL STIRRUP AND TIE HOOK TYPES."
2. THE TOP CAP FOR CLOSED STIRRUPS S15, S19, S24, AND S27 SHALL BE PLACED SUCH THAT THE 135° HOOK END IS NOT ON THE SIDE CONFINED BY THE SLAB.
3. PROVIDE TOP CAP FOR OPEN STIRRUPS S3, S21, S22, AND S29 TO MATCH SCHEDULED STIRRUP SIZE AT 48".

2 TYPICAL GRADE BEAM STIRRUP TYPES
3/4" = 1'-0"

NOTES:

1. CLEAR SPACING BETWEEN PENETRATIONS SHALL BE 24" MINIMUM UNLESS NOTED OTHERWISE BY THE STRUCTURAL ENGINEER.
2. PENETRATIONS SHALL BE LOCATED ACCORDING TO THE FOLLOWING CRITERIA:
   a. FOR BEAMS NOT SUPPORTING INTERSECTING BEAMS LOCATE PENETRATIONS WITHIN TWO FEET EITHER SIDE OF BEAM MIDSPAN.
   b. FOR BEAMS SUPPORTING INTERSECTING BEAMS CHECK WITH STRUCTURAL ENGINEER.
3. PENETRATION WIDTH MUST NOT EXCEED PENETRATION HEIGHT, UNLESS NOTED OTHERWISE ON THE STRUCTURAL DRAWINGS.
4. FOR LOCATIONS AND/OR SIZES OF PENETRATIONS NOT CONFORMING TO THE ABOVE CRITERIA AND NOT OTHERWISE DETAILED ON THE STRUCTURAL DRAWINGS, CONTRACTOR SHALL COORDINATE REQUIRED ADDITIONAL REINFORCEMENT WITH THE STRUCTURAL ENGINEER.
5. PROVIDE THE FOLLOWING REINFORCEMENT AT EACH SLEEVE, UNLESS NOTED OTHERWISE ON THE STRUCTURAL DRAWINGS:
   1-#5 TOP AND BOTTOM AT BEAMS WITH WIDTHS LESS THAN 9".
   2-#5 TOP AND BOTTOM AT BEAMS WITH 2-LEG STIRRUPS.
   4-#5 TOP AND BOTTOM AT BEAMS WITH 4-LEG STIRRUPS.
   "N"-#5 TOP AND BOTTOM AT BEAMS WITH "N"-LEG STIRRUPS.
6. PROVIDE ADDITIONAL STIRRUPS ABOVE AND BELOW PENETRATIONS AT SPACING NOT TO EXCEED ONE THIRD OF THE SCHEDULED STIRRUP SPACING, UNLESS DETAILED OTHERWISE ON THE STRUCTURAL DRAWINGS.
7. SCHEDULED BEAM STIRRUPS NOT SHOWN FOR CLARITY.

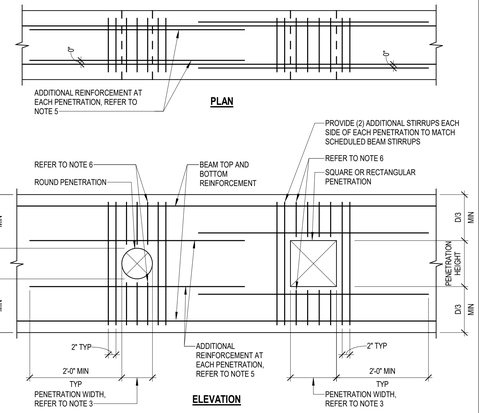

3 TYPICAL HORIZONTAL PENETRATION IN CONCRETE BEAM
NO SCALE

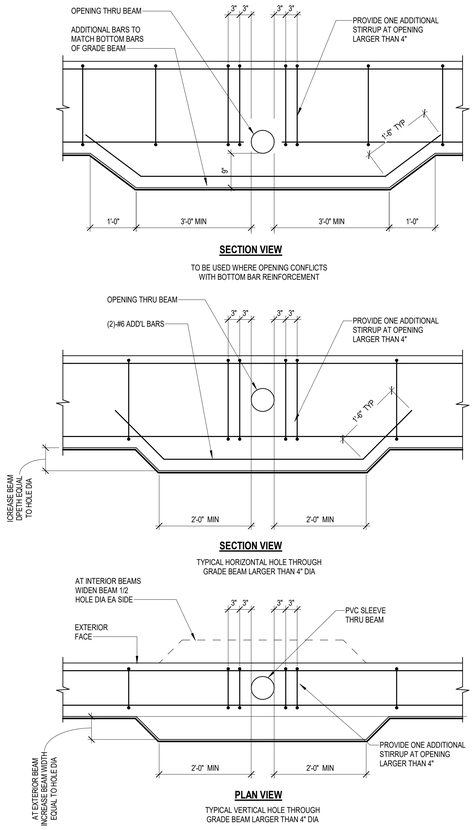

4 TYPICAL GRADE BEAM PENETRATION DETAILS
NO SCALE

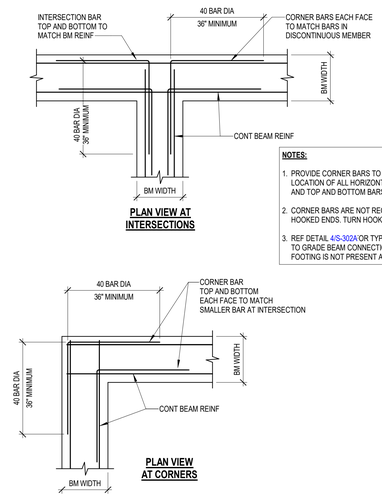

NOTES:
1. PROVIDE CORNER BARS TO MATCH SIZE AND LOCATION OF ALL HORIZONTAL GRADE BEAM AND TOP AND BOTTOM BARS.
2. CORNER BARS ARE NOT REQUIRED AT HOOKED ENDS. TURN HOOKS SIDEWAYS.
3. REF DETAIL 4/S-302A OR TYPICAL GRADE BEAM TO GRADE BEAM CONNECTION WHERE PIER/ FOOTING IS NOT PRESENT AT INTERSECTION.

5 TYPICAL CORNER BAR DETAILS
NO SCALE

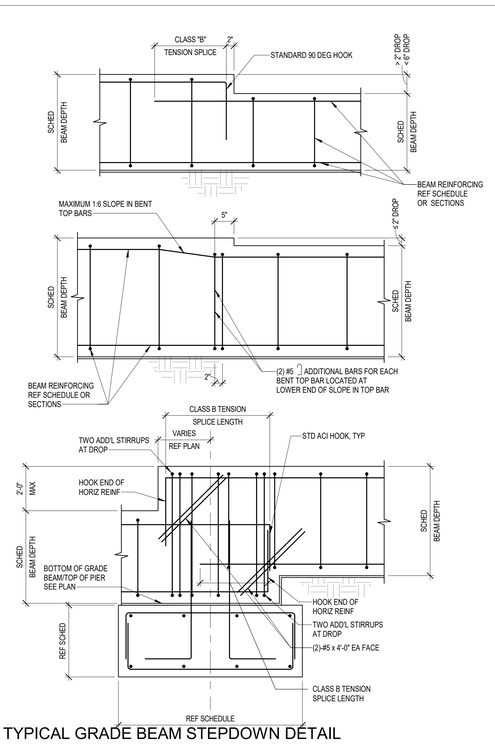

6 TYPICAL GRADE BEAM STEPDOWN DETAIL
NO SCALE

NOTES:

1. GENERAL CONTRACTOR SHALL COORDINATE REQUIRED BEAM SLEEVES WITH MECHANICAL, ELECTRICAL, AND PLUMBING CONTRACTORS. REQUIRED SLEEVES MAY OR MAY NOT BE SHOWN ON THE STRUCTURAL DRAWINGS. GENERAL CONTRACTOR SHALL SUBMIT PLAN SHOWING LAYOUT OF ALL SLEEVES WITH FORMWORK SHOP DRAWING SUBMITTAL.
2. SLEEVES SHALL BE LOCATED WITHIN THE MIDDLE THIRD OF THE SCHEDULED BEAM WIDTH.
3. CONTINUOUS BEAM REINFORCEMENT MAY BE SLIGHTLY DISPLACED (3" MAXIMUM) OR ADJACENT BARS BUNDLED (2 BAR BUNDLES MAXIMUM) TO FACILITATE SLEEVE INSTALLATION. DO NOT CUT, OFFSET, OR BEND REINFORCEMENT.
4. SLEEVES OCCURRING ON OPPOSITE SIDES OF A COLUMN MUST BE IN LINE.
5. THE OUTSIDE DIAMETER OF A SLEEVE MAY NOT EXCEED 15% OF THE SCHEDULED WIDTH OF THE BEAM THROUGH WHICH IT MUST PASS.
6. THE CONTRACTOR SHALL CONTACT THE ENGINEER OF RECORD WHEN A SLEEVE SIZE OR LOCATION DOES NOT MEET THE ABOVE CONDITIONS.
7. SCHEDULED BEAM STIRRUPS NOT SHOWN FOR CLARITY.

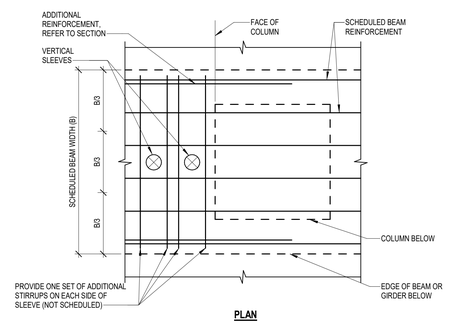

9 TYPICAL VERTICAL PENETRATION IN CONCRETE BEAM
NO SCALE

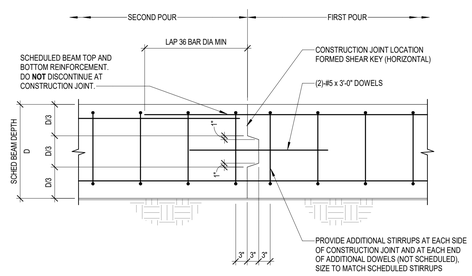

NOTES:

1. LOCATE JOINTS IN MIDDLE THIRD OF BEAM SPAN BETWEEN SUPPORTS.
2. ACCEPTABLE JOINT LOCATIONS ARE AS FOLLOWS:
   a. FOR BEAMS NOT SUPPORTING INTERSECTING BEAMS, PLACE JOINT WITHIN MIDDLE THIRD OF SPAN.
   b. FOR BEAMS SUPPORTING INTERSECTING BEAMS, CHECK WITH STRUCTURAL ENGINEER FOR JOINT LOCATIONS AND DOWEL REQUIREMENTS.
3. FOR JOINT LOCATIONS OTHER THAN WITHIN MIDDLE THIRD OF SPAN, CONTRACTOR SHALL COORDINATE REQUIRED ADDITIONAL REINFORCEMENT WITH THE ENGINEER ON THE SHOP DRAWINGS.
4. JOINTS MAY NOT OCCUR IN THE FIRST SPAN OF A BEAM LINE OR IN ANY SPAN WHICH IS LESS THAN 8 FEET.
5. GENERAL CONTRACTOR SHALL SUBMIT DESIRED CONSTRUCTION JOINT LAYOUT AS A SHOP DRAWING FOR APPROVAL A MINIMUM OF TWO WEEKS PRIOR TO POUR.

7 TYPICAL GRADE BEAM CONSTRUCTION JOINT
NO SCALE

NOTES:

1. TOP CONT BARS MAY BE SPLICED AT MID-SPAN OF BEAM ONLY. EXCEPT AT CANTILEVER SPANS, SPANS ADJACENT TO CANTILEVER SPANS AND SPANS WITH LENGTH NOT GREATER THAN ONE HALF OF THE ADJACENT SPAN LENGTH.
2. ALL HOOKS SHOWN ARE STANDARD HOOKS (90° OR 180°).
3. SPLICES IN SCHEDULED BARS LESS THAN 60'-0" LENGTH ARE ONLY PERMITTED AT THE SPECIFIED LOCATIONS SHOWN. SPLICES IN SCHEDULED BARS MORE THAN 60'-0" LENGTH SHALL BE REFERRED TO ENGINEER FOR APPROVAL.
4. BEAMS WITH DEPTH OF 36" OR LESS, DO NOT NEED INTERMEDIATE BARS UNLESS REQUIRED BY BEAM SCHEDULE. REF 1/S-302
5. REF TO DETAIL 6/S-302 FOR DROP IN TOP OR BOTTOM OF GRADE BEAM.
6. REF DETAIL 4/S-302A FOR TYPICAL GRADE BEAM TO GRADE BEAM CONNECTION WHERE PIER/ FOOTING IS NOT PRESENT AT INTERSECTION.
7. REF DETAIL 6/S-302A FOR TYPICAL GRADE BEAM REINFORCEMENT AT COLUMN WHERE PIER/ FOOTING OR WIDENED PILASTER IS NOT PRESENT BELOW COLUMN.

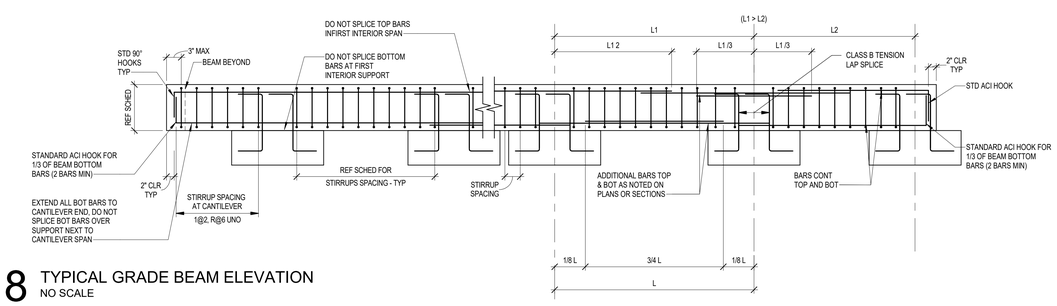

8 TYPICAL GRADE BEAM ELEVATION
NO SCALE

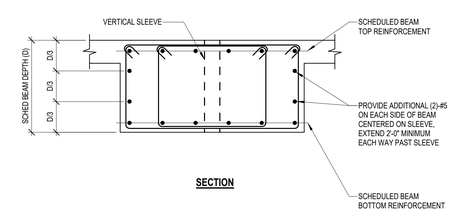

Kubala ENGINEERS
Ph: (800)246-3674
www.kubalaengineers.com
TX. REG. NO. F-23612

PBK
www.pbk.com
TX FIRM: BR 1608
HOUSTON, TX
713-966-0608

PKG 3A GPHS - Fieldhouse

1000 Keene St.
Galena Park, TX 77547

CLIENT PROJECT NO: 240539

ISSUE FOR PROPOSAL

Galena Park ISD

KEY PLAN
NORTH: PLAN TRUE

STATE OF TEXAS
JOHN R. KUBALA
106120
06/10/2025
Kubala Engineers
F-23612

CLIENT	
Galena Park ISD	
DATE 06/10/2025	PROJECT NUMBER 240539

DRAWING HISTORY

No.	Description	Date

CHECKED BY: SI
DRAWN BY: CML

GENERAL GRADE BEAM NOTES AND TYP DETAILS

S-302

Plot Stamp:
6/9/2025 5:32:22 PM

GENERAL GRADE BEAM NOTES AND TYP DETAILS
S-302A
FOR BLUEBEAM LABELING/OCR:

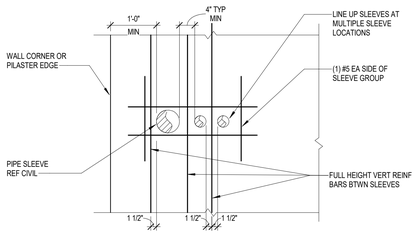

1 TYPICAL WALL PENETRATION DETAIL
NO SCALE

NOTE:

1. THIS DETAIL SHALL BE USED AT BUILDING SITES WHERE EXISTING UTILITIES, FOUNDATIONS OR OBSTRUCTIONS ARE ENCOUNTERED DURING THE PIER INSTALLATIONS. THE ORIGINAL SINGLE PIER SHALL BE REPLACED WITH TWO NEW PIERS AND A NEW STRAP BEAM SHALL BE ADDED AS SHOWN. ANY UTILITY LINES THAT ARE ENCOUNTERED SHALL BE COVERED WITH CONCRETE.

STRAP BEAM SCHEDULE

ORIGINAL BELL DIAM (IN)	DBL PIER BELL SIZE (IN)	DBL PIER SHAFT SIZE (IN)	STRAP BEAM LENGTH	STRAP BEAM (W X D)	STRAP BEAM REINFORCING
24, 36	30	16	5' - 0"	14" X 24"	(2)#7 T&B #3 @ 10"
42, 48	36	18	6' - 0"	14" X 24"	(3)#6 T&B #3 @ 10"
54, 60	48	24	8' - 0"	16" X 24"	(2)#6 TOP (4)#7 BOTT #3 @ 10"
66, 72	54	28	9' - 0"	20" X 24"	(3)#7 TOP (5)#8 BOTT #3 @ 9"
78, 84	60	30	10' - 0"	24" X 24"	(3)#7 TOP (6)#9 BOTT #4 @ 9"

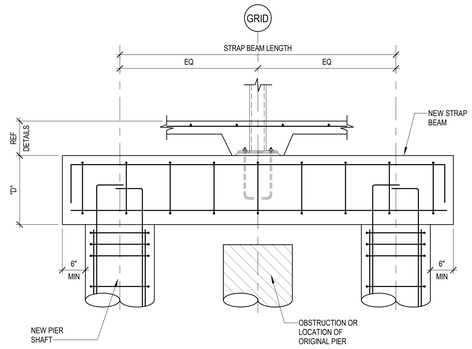

2 STRAP BEAM DETAIL AT CONSTRUCTION
NO SCALE

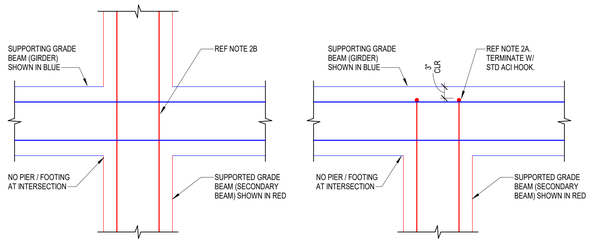

PLAN VIEW AT INTERSECTIONS

PLAN VIEW AT T-INTERSECTIONS

NOTES:

1. CONCRETE FOR SUPPORTING GRADE BEAM (GIRDER) AND SUPPORTED GRADE BEAM (SECONDARY BEAM) SHALL BE PLACED MONOLITHICALLY.
2. SUPPORTED GRADE BEAM (SECONDARY BEAM) LONGITUDINAL REINFORCEMENT INTO SUPPORTING GRADE BEAM (GIRDER):
   A. AT LEAST 1/3 OF BOTTOM BARS, BUT NOT LESS THAN TWO BARS, TO EXTEND INTO SUPPORTING BEAM (GIRDER) AND TERMINATE WITH STD ACI 90 DEGREE HOOK. ALL TOP BARS TO EXTEND AT LEAST Ldh INTO SUPPORTING BEAM (GIRDER) AND TERMINATE WITH STD HOOK IN TENSION. REF 3/S-300.
   B. LONGITUDINAL LAP SPLICES SHALL FOLLOW 8/S-302 ASSUMING SUPPORTING GRADE BEAM (GIRDER) IS THE PIER SUPPORT SHOWN IN 8/S-302.
3. REF 8/S-302 FOR INFORMATION NOT SHOWN OR ANNOTATED HERE. REF 5/S-302 FOR CORNER BARS. CORNER BARS, NOT SHOWN FOR CLARITY.

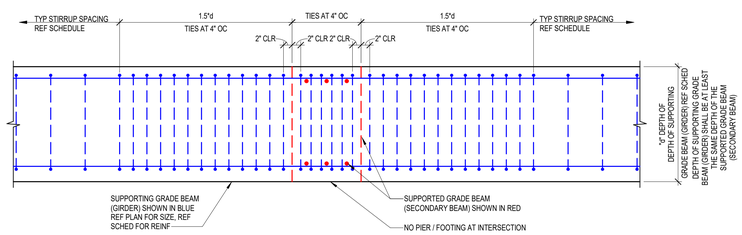

ELEVATION VIEW OF SUPPORTING GRADE BEAM (GIRDER)

4 TYPICAL GRADE BEAM TO GRADE BEAM CONNECTION DETAIL
NO SCALE

NOTES:

1. PROVIDE WIDENED PILASTER AS SHOWN IN 6/S-303SFHERE GRADE BEAM WIDTH DOES NOT MEET PILASTER WIDTH REQUIREMENTS AT GRAVITY COLUMNS, UNO.
2. PROVIDE WIDENED PILASTER AS SHOWN IN 2/S-610 WHERE GRADE BEAM WIDTH DOES NOT MEET PILASTER WIDTH REQUIREMENTS AT BRACE FRAME COLUMNS AND FIXED BASE PLATES PER BASE PLATE SCHEDULE AND 2/S-610, UNO.

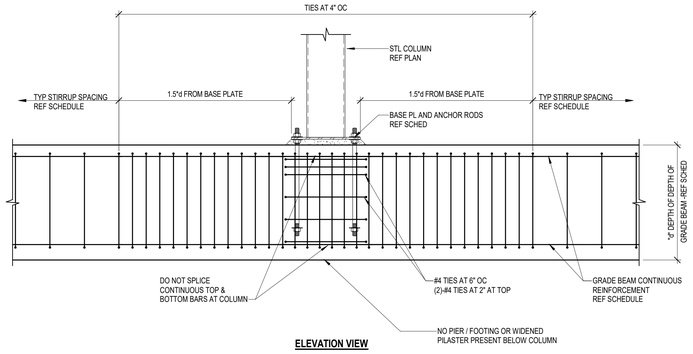

ELEVATION VIEW

6 TYPICAL GRADE BEAM REINF. AT COLUMN WITHOUT PIER BELOW
NO SCALE

Kubala ENGINEERS
Ph: (800)246-3674
www.kubalaengineers.com
TX. REG. NO. F-23612

PBK
www.pbk.com
TX FIRM: BR 1608
HOUSTON, TX
713-365-0608

PKG 3A GPHS - Fieldhouse

1000 Keene St.
Galena Park, TX 77547

CLIENT PROJECT NO: 240539

ISSUE FOR PROPOSAL

KEY PLAN
NORTH: PLAN TRUE

STATE OF TEXAS
JOHN R. KUBALA
106120
06/10/2025
Kubala Engineers
F-23612

CLIENT	
Galena Park ISD	
DATE 06/10/2025	PROJECT NUMBER 240539

DRAWING HISTORY

No.	Description	Date

CHECKED BY: SI
DRAWN BY: CML

GENERAL GRADE BEAM NOTES AND TYP DETAILS

S-302A

Plot Stamp:
6/9/2025 5:32:22 PM

GENERAL FOUNDATION NOTES AND TYP DETAILS
S-303SF

FOR BLUEBEAM LABELING/OCR:

FOOTINGS:

1. FOOTING DESIGN IS BASED UPON THE FOLLOWING CRITERIA. REFER TO TYPICAL FOOTING DETAIL FOR FOOTING SCHEDULE AND REINFORCING. DISTRIBUTION OF FOOTING TYPES AS INDICATED ON PLANS.
   - a. NET ALLOWABLE SOIL BEARING PRESSURE ____ XXX PSF
   - b. MINIMUM FOOTING BEARING DEPTH ____ XXX FT BELOW FINAL EXTERIOR GRADE
   - c. MINIMUM WALL FOOTING WIDTH ____ XXX INCHES
   - d. MINIMUM COLUMN FOOTING WIDTH ____ XXX INCHES
   - e. COEFFICIENT OF BASE FRICTION AT FOOTING BASE ____ XXX
   - f. ALLOWABLE PASSIVE EARTH PRESSURE FOR FOOTINGS BEARING AGAINST NATIVE SANDS OR SAND BACKFILL ____ XXX PSF/FT
   - g. ALLOWABLE PASSIVE EARTH PRESSURE FOR FOOTINGS BEARING AGAINST NATIVE CLAYS OR PROPERLY PLACED AND COMPACTED CLAY BACKFILL ____ XXX PSF
   - h. DEPTH OF SOIL WHERE PASSIVE EARTH PRESSURE SHALL BE NEGLECTED ____ XXX FT FROM ADJACENT GRADE
   - i. BEARING STRATUM ____ LEAN CLAY/SANDY LEAN CLAY/FAT CLAY
2. FOOTINGS NOT SPECIFICALLY LOCATED ON THE PLAN SHALL BE LOCATED ON CENTERLINE OF THE COLUMN ABOVE, WHERE NO COLUMN OCCURS, LOCATE FOOTING ON CENTERLINE OF WALL OR BEAM.
3. PROVIDE DOWELS FROM FOOTINGS INTO CONCRETE ABOVE PER THE TYPICAL FOOTING DETAIL.
4. ELEVATION OF TOP OF FOOTING IS NOTED ON DRAWINGS.
5. REFERENCE PLANS AND FOOTING SCHEDULE FOR FOOTING SIZE, REINFORCING, AND DEPTH OF BEARING STRATUM.
6. ALL FOOTINGS SHALL BE INSPECTED BY A REPRESENTATIVE OF THE PROJECT'S GER IN ORDER TO ENSURE THAT THE BEARING STRATUM IS PROPER AND IN ACCORDANCE WITH THE RECOMMENDATIONS GIVEN IN THE GEOTECHNICAL REPORT.
7. USE TEMPLATES TO SET DOWELS AND ANCHOR BOLTS IN FOOTINGS. PROVIDE DETAILS OF THE TEMPLATES IN THE FOOTING SHOP DRAWINGS. REMOVE THE TEMPLATE COMPLETELY FROM THE TOP OF THE FOOTING PRIOR TO SUPERSTRUCTURE CONSTRUCTION.
8. UNLESS REQUIRED BY THE PROJECT'S GER TO BE FORM-SIDED, THE FOOTING EXCAVATIONS SHALL BE MADE TO NEAT LINES AND SHALL BE FREE OF LOOSE OR WET MATERIALS. CONCRETE CAN BE PLACED DIRECTLY AGAINST THE SOIL WITHOUT FORMING.
9. PLACE CONCRETE IN FOOTING EXCAVATION WITHIN 8 HOURS OF FINAL EXCAVATION OR AS SPECIFIED IN THE GEOTECHNICAL REPORT.

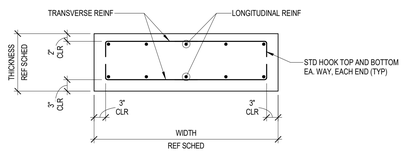

REINF DIAGRAM

SPREAD FOOTING SCHEDULE

MARK	WIDTH (FT-IN)	LENGTH (FT-IN)	THICKNESS (FT-IN)	LONGITUDINAL TOP REINF	LONGITUDINAL BOT REINF	TRANSVERSE TOP REINF	TRANSVERSE BOT REINF	REMARKS
F4	4' - 0"	4' - 0"	1' - 6"	#5 @ 12" OC	#6 @ 12" OC	#5 @ 12" OC	#6 @ 12" OC	
F7	7' - 0"	7' - 0"	1' - 6"	#5 @ 12" OC	#7 @ 12" OC	#5 @ 12" OC	#7 @ 12" OC	
F8	8' - 0"	8' - 0"	1' - 6"	#5 @ 12" OC	#7 @ 12" OC	#5 @ 12" OC	#7 @ 12" OC	
F9	9' - 0"	9' - 0"	1' - 6"	#5 @ 12" OC	#7 @ 12" OC	#5 @ 12" OC	#7 @ 12" OC	
F10	10' - 0"	10' - 0"	1' - 6"	#5 @ 12" OC	#7 @ 12" OC	#5 @ 12" OC	#7 @ 12" OC	
F13	15' - 0"	8' - 0"	1' - 6"	#5 @ 12" OC	#7 @ 12" OC	#5 @ 12" OC	#7 @ 12" OC	
F14	23' - 0"	9' - 0"	1' - 6"	#5 @ 12" OC	#7 @ 12" OC	#5 @ 12" OC	#7 @ 12" OC	

CONTINUOUS FOOTING SCHEDULE

TYPE	WIDTH	THICKNESS	LONGITUDINAL TOP REINF	LONGITUDINAL BOT REINF	TRANSVERSE TOP REINF	TRANSVERSE BOT REINF	REMARKS
CF6	6' - 0"	1' - 6"	#7 @ 12" OC	#7 @ 12" OC	#7 @ 12" OC	#7 @ 12" OC	

1 TYPICAL FOOTING REINF DIAGRAM AND SCHEDULE
NO SCALE

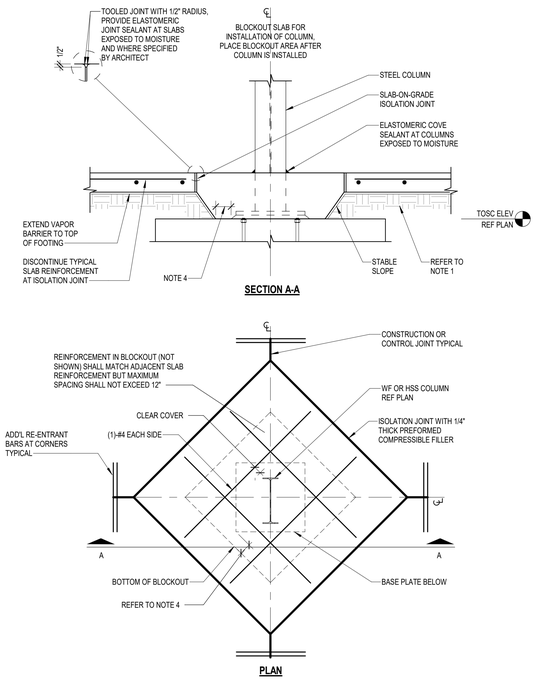

NOTES:

1. REFER TO "TYPICAL SLAB-ON-GRADE SUBGRADE PREPARATION" FOR SUBGRADE PREPARATION REQUIREMENTS INCLUDING LOCATION OF VAPOR BARRIER RELATIVE TO SLAB AND GRANULAR BASE AND WHETHER FINE-GRADE GRANULAR MATERIAL IS REQUIRED.
2. REFER TO "TYPICAL CONSTRUCTION AND CONTROL JOINTS - SLAB-ON-GRADE" FOR CONSTRUCTION AND CONTROL JOINT REQUIREMENTS.
3. CONTRACTOR TO COORDINATE REQUIRED SIZE OF BLOCKOUT FOR STRUCTURAL STEEL COLUMNS WITH STEEL ERECTOR. SUBMIT THE DESIRED BLOCKOUT SIZE TO ARCHITECT FOR APPROVAL.
4. BLOCKOUT SHALL BE SIZED TO PROVIDE 3" MINIMUM CONCRETE COVER ALL AROUND COLUMN AND BASE PLATE.
5. THE BLOCKOUT SHALL BE KEYWAYED WITH RE-ENTRANT BARS.

2 TYPICAL SLAB-ON-GRADE INTERIOR BLOCKOUT DETAIL
NO SCALE

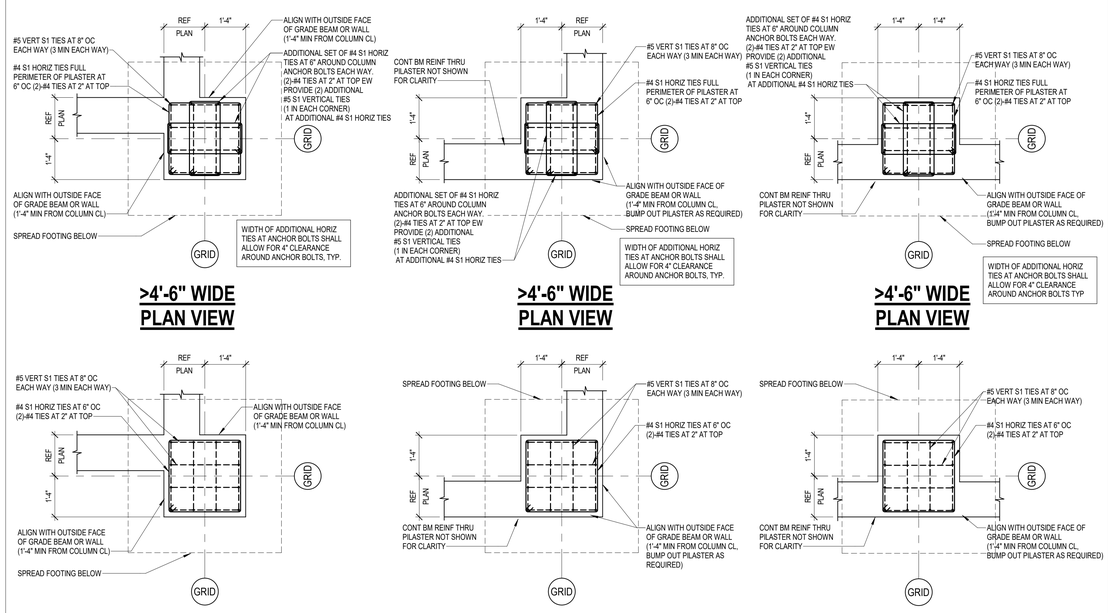

6 TYPICAL PILASTER DETAILS AT PIERS
NO SCALE

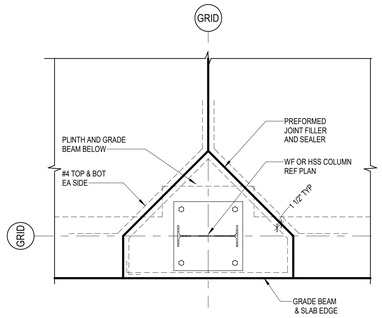

4 TYPICAL SLAB-ON-GRADE PERIMETER BLOCKOUT DETAIL
NO SCALE

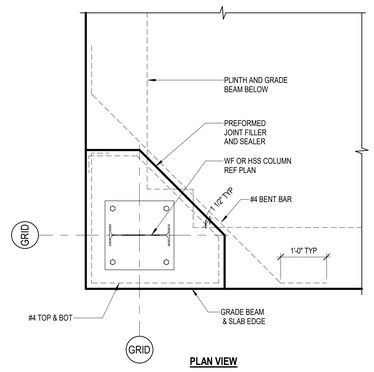

5 TYPICAL SLAB-ON-GRADE CORNER BLOCKOUT DETAIL
NO SCALE

Kubala ENGINEERS
Ph: (800)246-3674
www.kubalaengineers.com
TX. REG. NO. F-23612

PBK
www.pbk.com
TX FIRM: BR 1608
HOUSTON, TX 713-365-0608

PKG 3A GPHS - Fieldhouse

1000 Keene St.
Galena Park, TX 77547

CLIENT PROJECT NO: 240539

ISSUE FOR PROPOSAL

Galena Park ISD

KEY PLAN
NORTH: PLAN TRUE

STATE OF TEXAS
JOHN R. KUBALA
106120
06/10/2025
Kubala Engineers
F-23612

CLIENT	
Galena Park ISD	
DATE 06/10/2025	PROJECT NUMBER 240539

DRAWING HISTORY

No.	Description	Date

CHECKED BY: SI
DRAWN BY: CML

GENERAL FOUNDATION NOTES AND TYP DETAILS

S-303SF

Plot Stamp:
6/9/2025 5:32:23 PM

GENERAL FOUNDATION NOTES AND TYP DETAILS
S-304

FOR BLUEBEAM LABELING/OCR:

NOTES:

1. GENERAL CONTRACTOR TO COORDINATE WITH THE MECHANICAL DRAWINGS AND SPECIFICATIONS TO DETERMINE LOCATIONS OF HOUSEKEEPING PADS, AND TO PROVIDE WHERE REQUIRED, IF NONE ARE SHOWN ON THE STRUCTURAL DRAWINGS.
2. COORDINATE ALL PAD DIMENSIONS, AND VERIFY ADEQUACY WITH THE MECHANICAL ENGINEER AND THE EQUIPMENT REQUIREMENTS.
3. EQUIPMENT SKIDS/ATTACHMENT TO FOUNDATION SHALL BE DEFERRED SUBMITTAL SIGNED BY REGISTERED P.E. RESPONSIBLE FOR THEIR DESIGN.

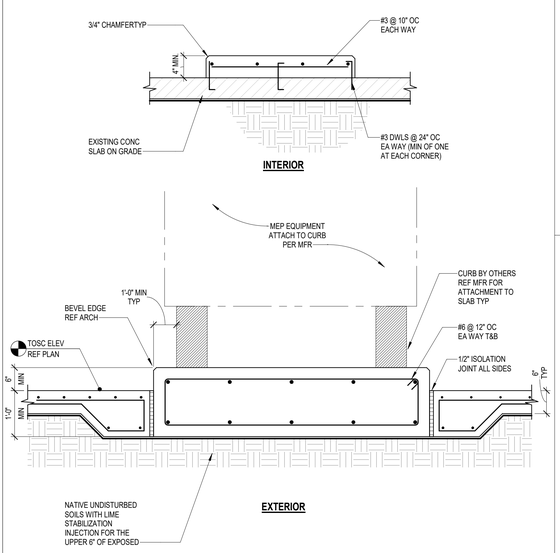

1 TYPICAL CONCRETE HOUSEKEEPING PAD DETAIL
NO SCALE

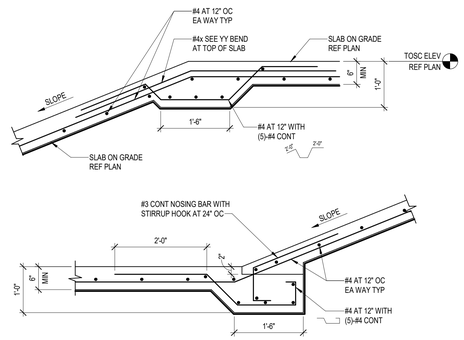

2 SLAB-ON-GRADE SLOPE REINF
NO SCALE

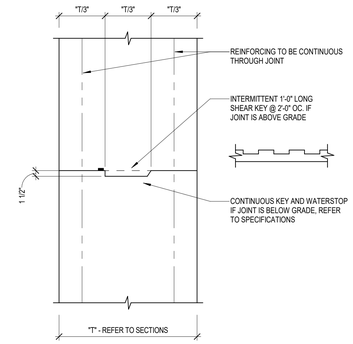

3 TYP HORIZONTAL CONSTRUCTION JOINT IN BEAMS AND WALLS OR VERTICAL CONSTRUCTION JOINT IN WALLS
NO SCALE

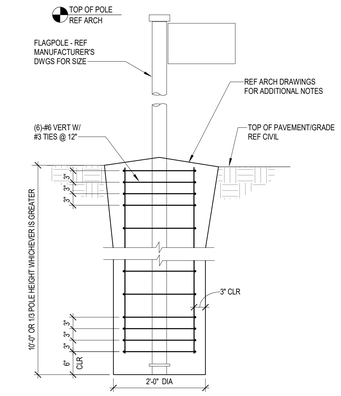

4 FLAGPOLE FOOTING DETAIL
NO SCALE

NOTE:

1. THE GENERAL CONTRACTOR IS RESPONSIBLE FOR THE COORDINATION OF BOLLARD LOCATIONS WITH THE ARCHITECTURAL DRAWINGS AND SHALL PROVIDE BOLLARDS WHERE REQUIRED WHETHER SHOWN ON THE STRUCTURAL DRAWINGS OR NOT.

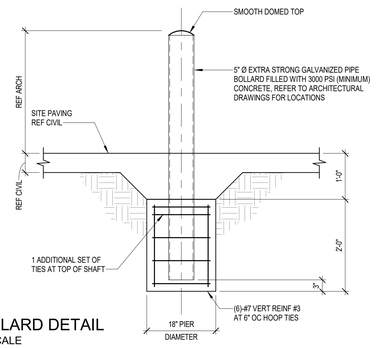

5 BOLLARD DETAIL
NO SCALE

ALL STEEL FRAMING & CONNECTION BOLTS TO BE GALVANIZED. NO FIELD WELDING. COORDINATE ALL DIMENSIONS AND COOLING TOWER ANCHOR LOCATIONS WITH APPROVED SHOP DRAWINGS SUBMIT LAYOUT FOR APPROVAL.

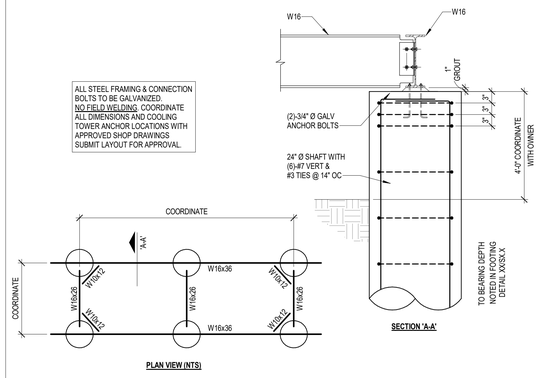

6 COOLING TOWER SUPPORT DETAIL
NO SCALE

NOTE:

1. CONTRACTOR TO COORDINATE LOCATIONS OF STIFFENER BEAMS TO ALIGN WITH LOCATIONS OF STAIR STRINGERS & LANDING POSTS. COORDINATE WITH STAIR MANUFACTURER AS REQUIRED.

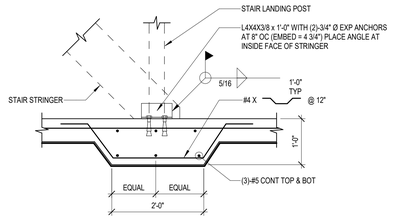

7 TYPICAL SLAB STIFFENER UNDER STAIR STRINGER
NO SCALE

LIGHT POLE BASE SCHEDULE

MAX POLE HT	MIN PIER DIAMETER	MIN DEPTH	VERT REINF	HOOP TIES	NOTES
18'-0" TO 24'-0"	18"	12'-0"	(6) #6	#3 AT 12" OC	1,2
25'-0" TO 30'-0"	24"	12'-0"	(6) #6	#3 AT 12" OC	1,2

NOTE(S):

1. CONTRACTOR SHALL PROVIDE AN ALLOWANCE FOR PIER CASINGS ON A PER LINEAR FOOT BASIS AS PER DIVISION 1 OF THE PROJECT SPECIFICATIONS. ALSO REFER TO THE GEOTECHNICAL REPORT FOR PIER CASING REQUIREMENTS.
2. SPLICE VERTICAL REINFORCING IN PIERS WITH CLASS B TENSION LAP SPLICE.
3. OPTIONAL CONSTRUCTION JOINT IS ACCEPTABLE. DO NOT SPLICE VERTICAL REINFORCING ABOVE JOINT.
4. FOUNDATION DETAIL IS BASED ON A MAXIMUM FIXTURE EPA OF 1.2

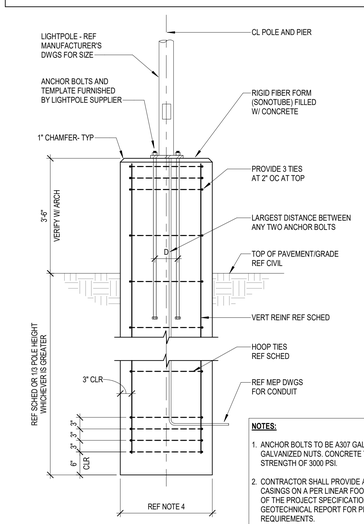

NOTES:

1. ANCHOR BOLTS TO BE A307 GALVANIZED BOLTS WITH GALVANIZED NUTS. CONCRETE TO HAVE A 28 DAY STRENGTH OF 3000 PSI.
2. CONTRACTOR SHALL PROVIDE AN ALLOWANCE FOR PIER CASINGS ON A PER LINEAR FOOT BASIS AS PER DIVISION 1 OF THE PROJECT SPECIFICATIONS. ALSO REFER TO THE GEOTECHNICAL REPORT FOR PIER CASING REQUIREMENTS.
3. REF MEP DRAWINGS FOR EMBEDDED CONDUIT, WIRES, ETC.
4. MIN PIER DIAMETER SHALL BE THE GREATER OF D PLUS 9" OR THE MIN PIER DIAMETER IN THE SCHEDULE.

8 LIGHTPOLE FOOTING DETAIL
NO SCALE

THIS DETAIL SHALL BE USED FOR SOLID FILL CHAIN LINK WITH WIND SCREEN OR OTHER SLATTED - TYPE INFILL. GC COORD LOCATION W/ ARCH

THIS DETAIL SHALL BE USED FOR OPEN CHAIN LINK WITH NO WINDSCREEN OR OTHER SLATTED - TYPE INFILL. GC COORD LOCATION W/ ARCH

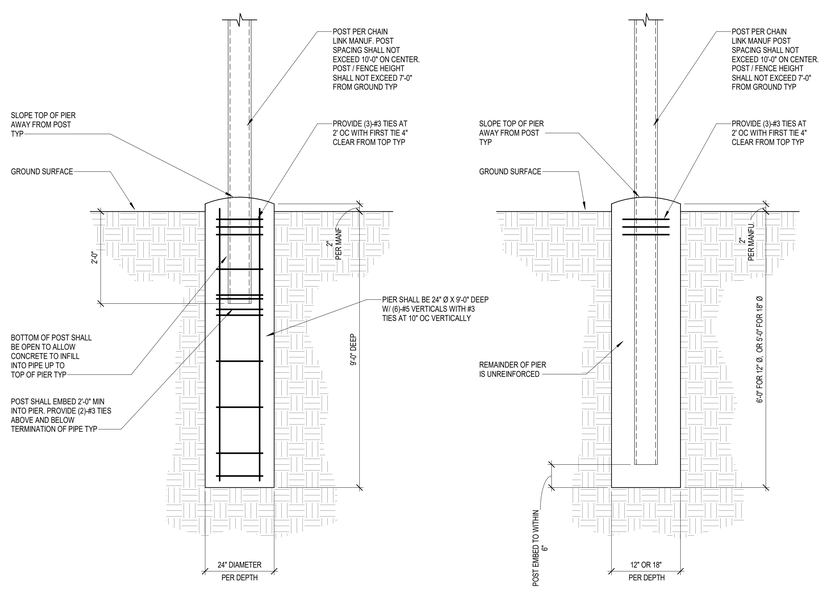

9 CHAIN LINK FENCE POST DETAIL
NO SCALE

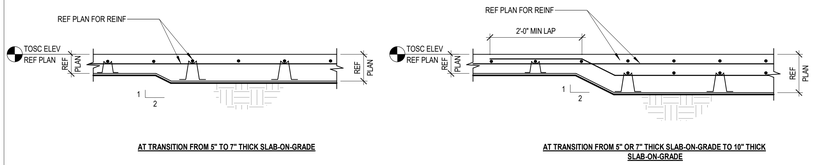

AT TRANSITION FROM 5" TO 7" THICK SLAB-ON-GRADE

AT TRANSITION FROM 5" OR 7" THICK SLAB-ON-GRADE TO 10" THICK SLAB-ON-GRADE

10 TYPICAL CHANGE IN SLAB THICKNESS
NO SCALE

Kubala ENGINEERS
Ph: (800)246-3674
www.kubalaengineers.com
TX. REG. NO. F-23612

PBK
www.pbk.com
TX FIRM: BR 1608
HOUSTON, TX 713-365-0608

PKG 3A GPHS - Fieldhouse

1000 Keene St.
Galena Park, TX 77547

CLIENT PROJECT NO: 240539

ISSUE FOR PROPOSAL

Galena Park ISD

KEY PLAN
NORTH: PLAN TRUE

STATE OF TEXAS
JOHN R. KUBALA
106120
06/10/2025
Kubala Engineers
F-23612

CLIENT	
Galena Park ISD	
DATE 06/10/2025	PROJECT NUMBER 240539

DRAWING HISTORY

No.	Description	Date

CHECKED BY: SI
DRAWN BY: CML

GENERAL FOUNDATION NOTES AND TYP DETAILS

S-304

Plot Stamp:
6/9/2025 5:32:24 PM

FOUNDATION DETAILS
S-310
FOR BLUEBEAM LABELING/OCR:

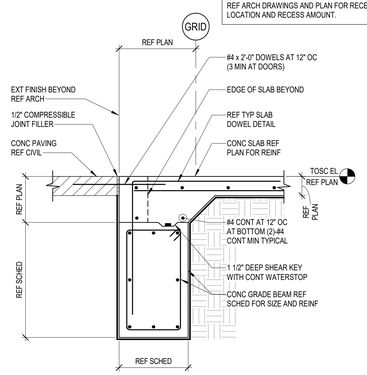

1 EXTERIOR GRADE BEAM AT DOOR
3/4" = 1'-0"

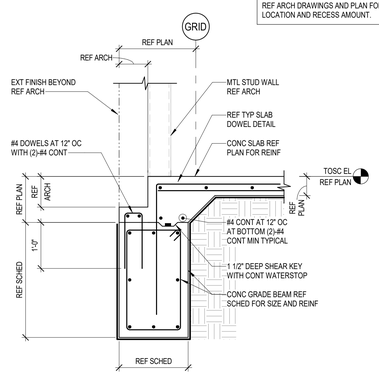

2 EXTERIOR GRADE BEAM AT LEDGE
3/4" = 1'-0"

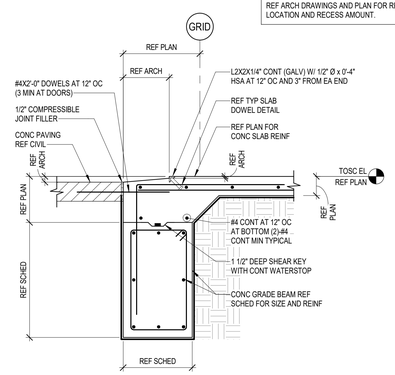

3 EXTERIOR GRADE BEAM AT OVERHEAD DOOR
3/4" = 1'-0"

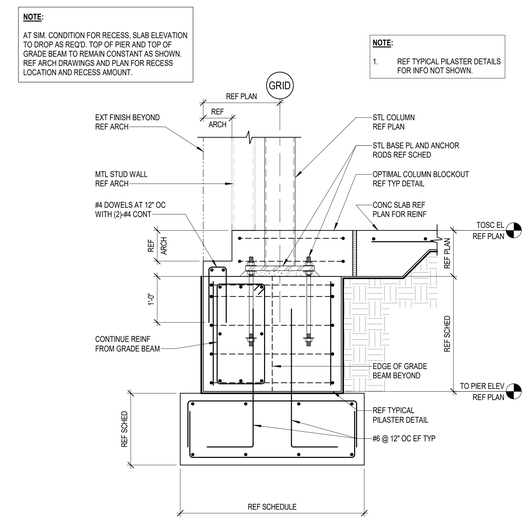

4 EXTERIOR PILASTER AT COLUMN
3/4" = 1'-0"

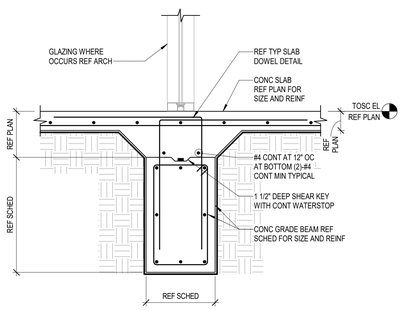

5 INTERIOR GRADE BEAM AT GLAZING
3/4" = 1'-0"

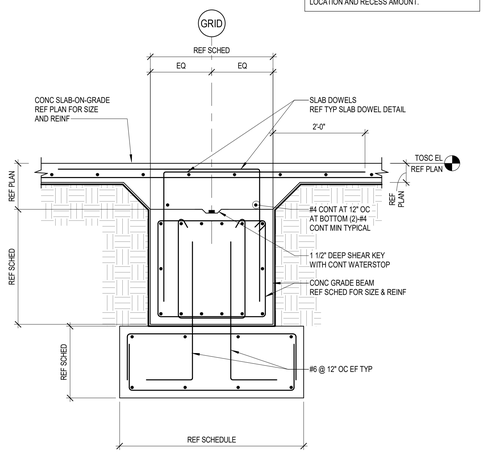

6 INTERIOR GRADE BEAM AT PIER
3/4" = 1'-0"

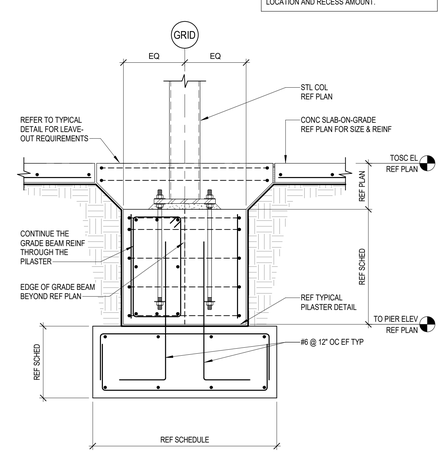

7 INTERIOR COLUMN AT PILASTER
3/4" = 1'-0"

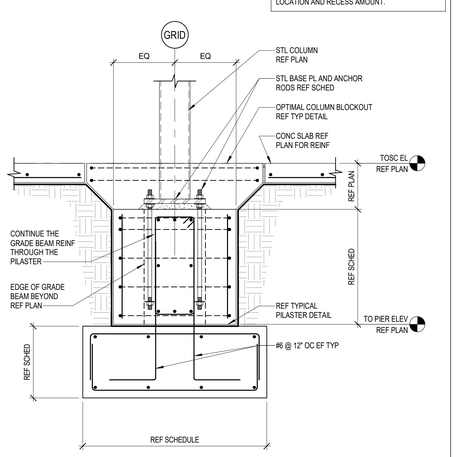

8 INTERIOR COLUMN AT PILASTER
3/4" = 1'-0"

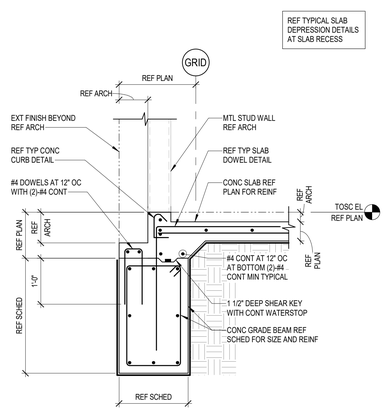

9 EXTERIOR GRADE BEAM
3/4" = 1'-0"

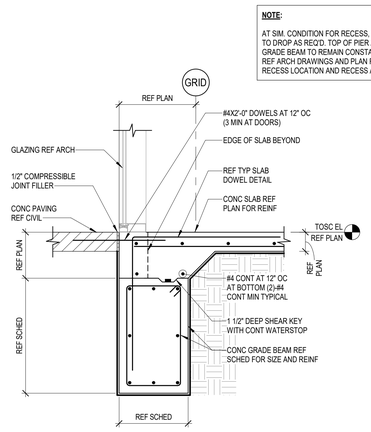

10 EXTERIOR GRADE BEAM AT GLAZING
3/4" = 1'-0"

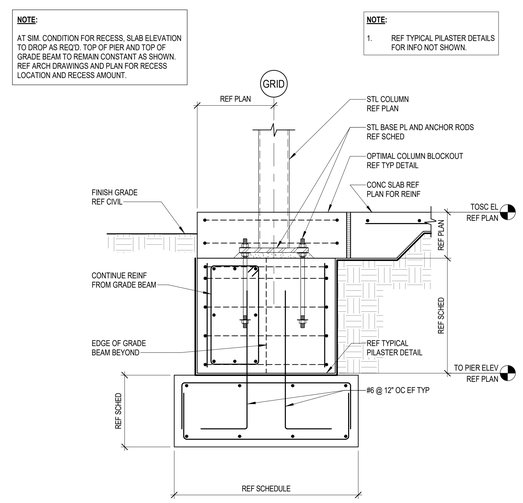

11 EXTERIOR PILASTER AT COLUMN
3/4" = 1'-0"

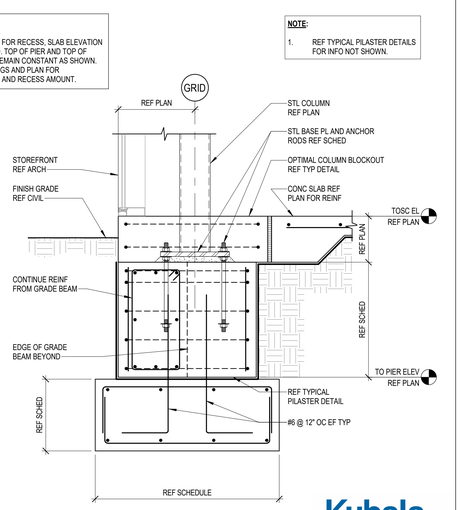

12 EXTERIOR COLUMN AT PILASTER W/ GLAZING
3/4" = 1'-0"

Kubala ENGINEERS
Ph.: (800)246-3674
www.kubalaengineers.com
TX. REG. NO. F-23612

PBK
www.pbk.com
TX FIRM: BR 1608
HOUSTON, TX
713-965-0608

PKG 3A GPHS - Fieldhouse

1000 Keene St.
Galena Park, TX 77547

CLIENT PROJECT NO: 240539

ISSUE FOR PROPOSAL

KEY PLAN
NORTH: PLAN TRUE

STATE OF TEXAS
JOHN R. KUBALA
106120
06/10/2025
Kubala Engineers
F-23612

CLIENT	
Galena Park ISD	
DATE 06/10/2025	PROJECT NUMBER 240539

DRAWING HISTORY

No.	Description	Date

CHECKED BY: SI
DRAWN BY: CML

FOUNDATION DETAILS

S-310

Plot Stamp:
6/9/2025 5:32:25 PM

FOUNDATION DETAILS
S-311
FOR BLUEBEAM LABELING/OCR:

0"
1"

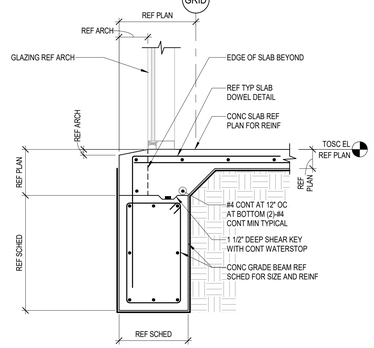

1 EXTERIOR GRADE BEAM AT STOREFRONT
3/4" = 1'-0"

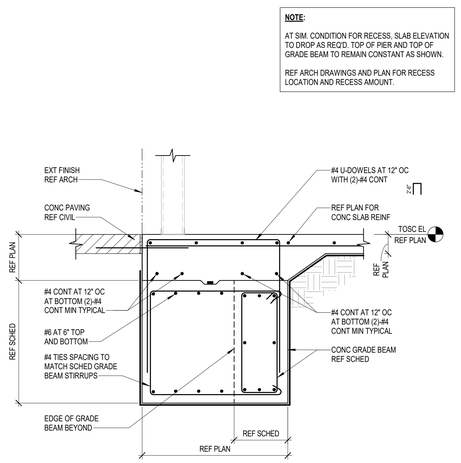

2 EXTERIOR WIDENED GRADE BEAM
3/4" = 1'-0"

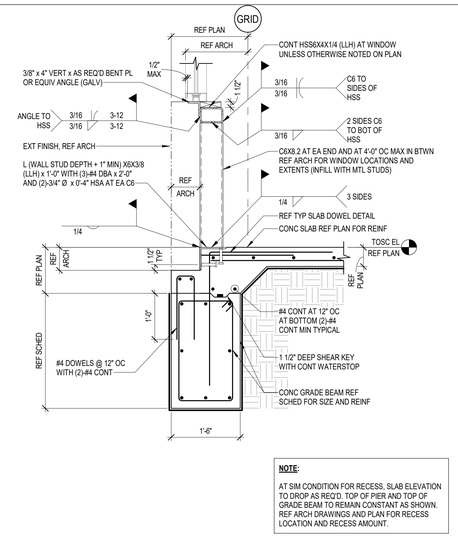

3 FOUNDATION SECTION
3/4" = 1'-0"

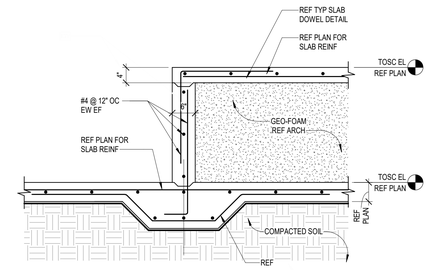

4 SECTION AT PLATFORM
3/4" = 1'-0"

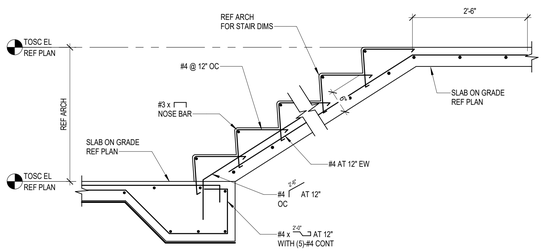

5 TYPICAL STAIR REINFORCING DEATIL
3/4" = 1'-0"

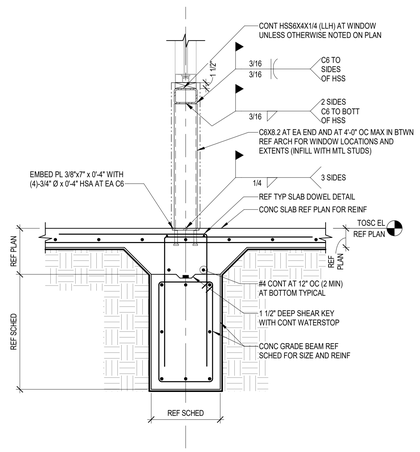

6 INTERIOR STOREFRONT SUPPORT
3/4" = 1'-0"

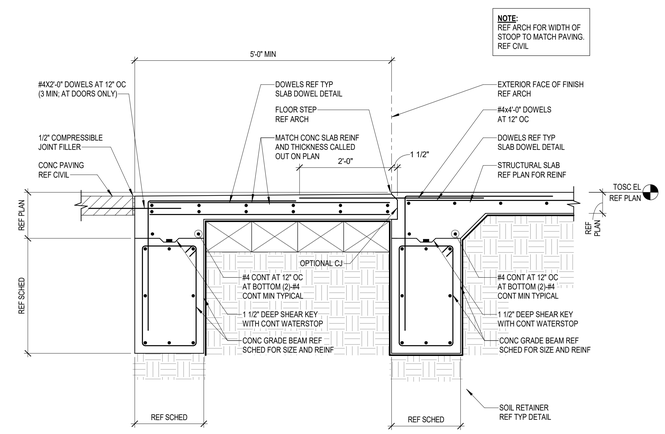

7 TYPICAL CONC SLAB-ON-GRADE STOOP AT EXTERIOR DOORS
3/4" = 1'-0"

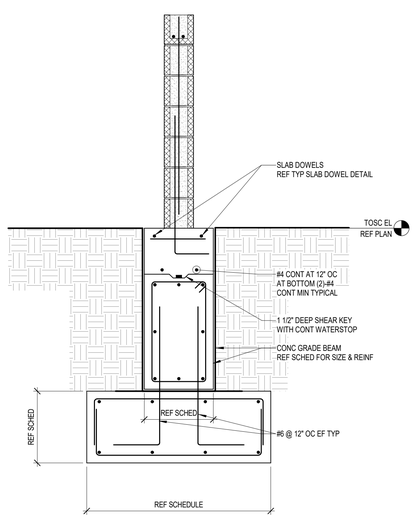

8 EXTERIOR WIDENED GRADE BEAM
3/4" = 1'-0"

Kubala ENGINEERS
Ph: (800)246-3674
www.kubalaengineers.com
TX. REG. NO. F-23612

PBK
www.pbk.com
TX FIRM: BR 1608
HOUSTON, TX
713-965-0608

PKG 3A GPHS - Fieldhouse

1000 Keene St.
Galena Park, TX 77547

CLIENT PROJECT NO: 240539
ISSUE FOR PROPOSAL

KEY PLAN
NORTH: PLAN TRUE

STATE OF TEXAS
JOHN R. KUBALA
106120
06/10/2025
Kubala Engineers
F-23612

CLIENT	
Galena Park ISD	
DATE 06/10/2025	PROJECT NUMBER 240539

DRAWING HISTORY

No.	Description	Date

CHECKED BY: SI
DRAWN BY: CML

FOUNDATION DETAILS

S-311

Plot Stamp:
6/9/2025 5:32:25 PM

FOUNDATION DETAILS (CMU)
S-313
FOR BLUEBEAM LABELING/OCR:

0"
1"

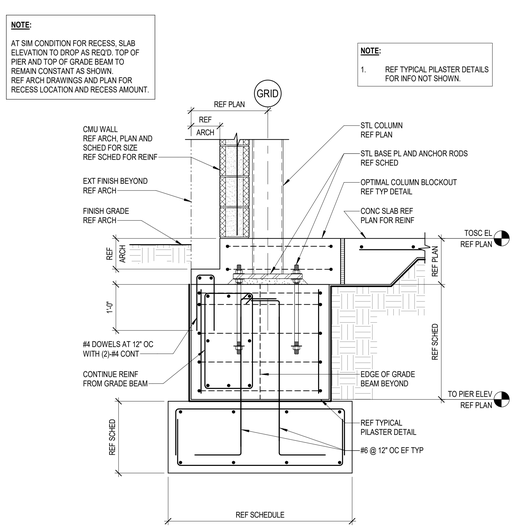

1 EXTERIOR PILASTER AT COLUMN
3/4" = 1'-0"

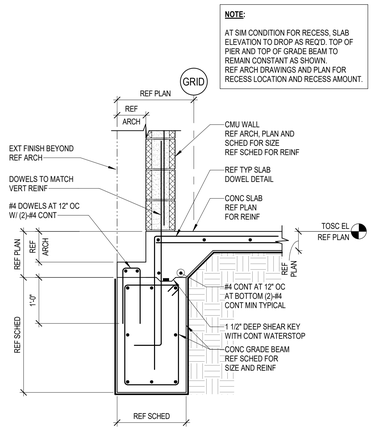

2 EXTERIOR GRADE BEAM AT CMU WALL
3/4" = 1'-0"

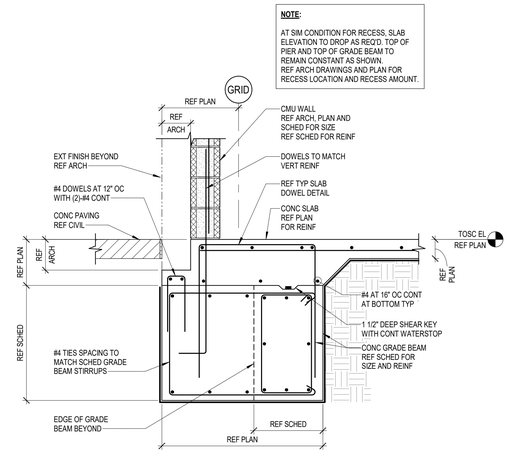

3 EXTERIOR WIDENED GRADE BEAM
3/4" = 1'-0"

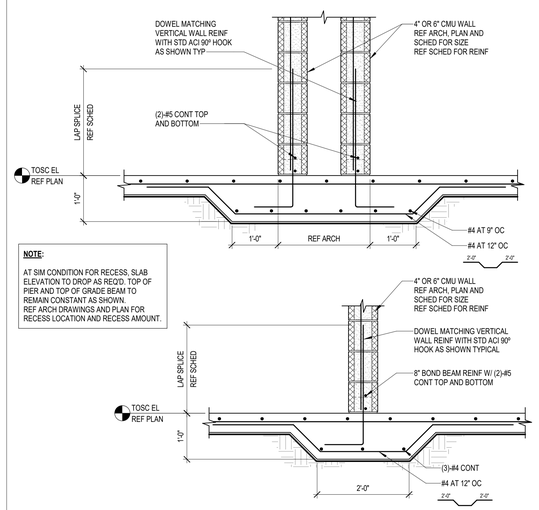

4 TYPICAL INTERIOR CMU ON SLAB-ON-GRADE
3/4" = 1'-0"

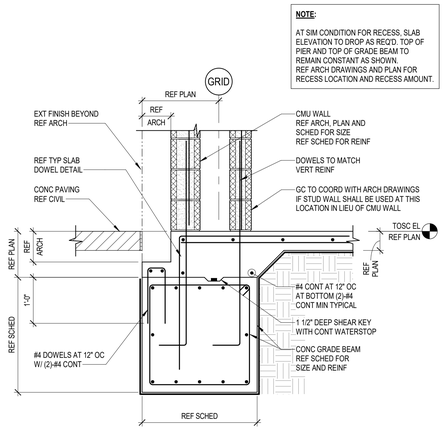

5 EXTERIOR GRADE BEAM AT DOUBLE CMU WALLS
3/4" = 1'-0"

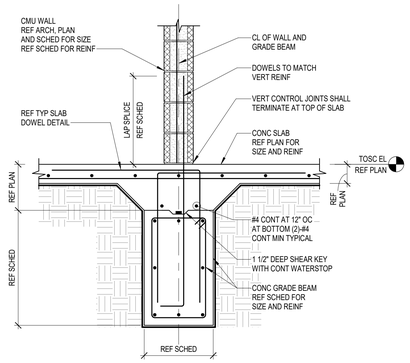

6 INTERIOR CMU WALL AT INTERIOR GRADE BEAM
3/4" = 1'-0"

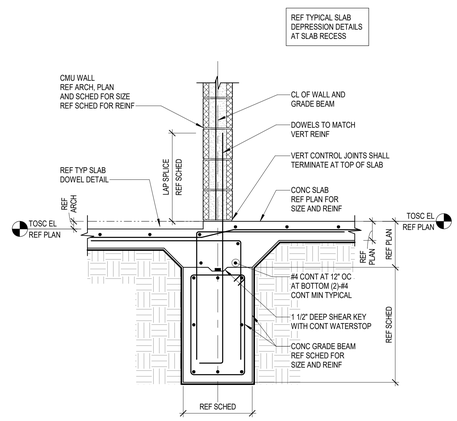

7 INTERIOR CMU WALL AT INTERIOR GRADE BEAM W/RECESS
3/4" = 1'-0"

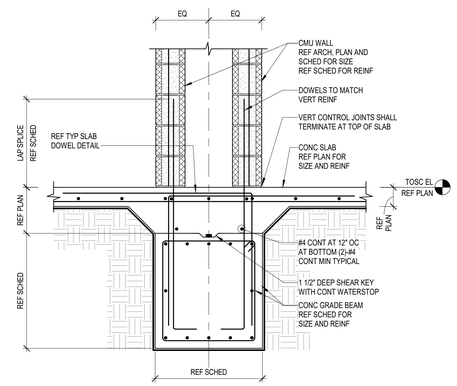

8 INTERIOR GRADE BEAM AT DOUBLE CMU WALLS
3/4" = 1'-0"

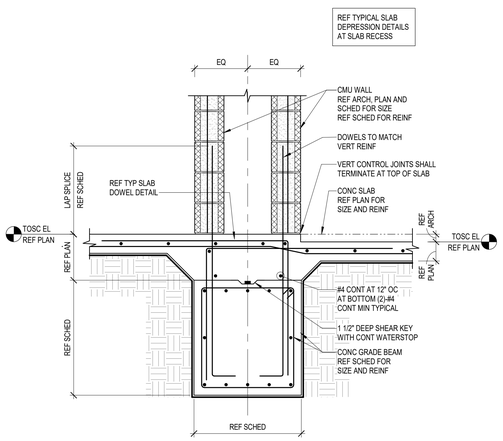

9 INTERIOR GRADE BEAM AT DOUBLE CMU WALLS W/ RECESS ON ONE SIDE
3/4" = 1'-0"

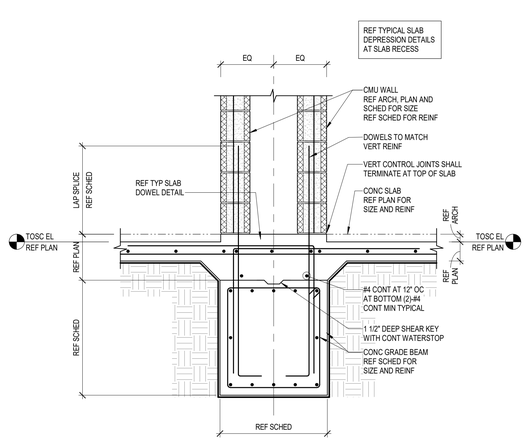

10 INTERIOR GRADE BEAM AT DOUBLE CMU WALLS W/RECESS ON BOTH SIDES
3/4" = 1'-0"

Kubala ENGINEERS
Ph.: (800)246-3674
www.kubalaengineers.com
TX. REG. NO. F-23612

PBK
www.pbk.com
TX FIRM: BR 1608
HOUSTON, TX
713-365-0608

PKG 3A GPHS - Fieldhouse

1000 Keene St.
Galena Park, TX 77547

CLIENT PROJECT NO: 240539

ISSUE FOR PROPOSAL

KEY PLAN
NORTH: PLAN TRUE

STATE OF TEXAS
JOHN R. KUBALA
106120
06/10/2025
Kubala Engineers
F-23612

CLIENT	
Galena Park ISD	
DATE 06/10/2025	PROJECT NUMBER 240539

DRAWING HISTORY

No.	Description	Date

CHECKED BY: SI
DRAWN BY: CML

FOUNDATION DETAILS (CMU)

S-313

Plot Stamp:
6/9/2025 5:32:26 PM

FOUNDATION DETAILS (CMU)
S-314
FOR BLUEBEAM LABELING/OCR:

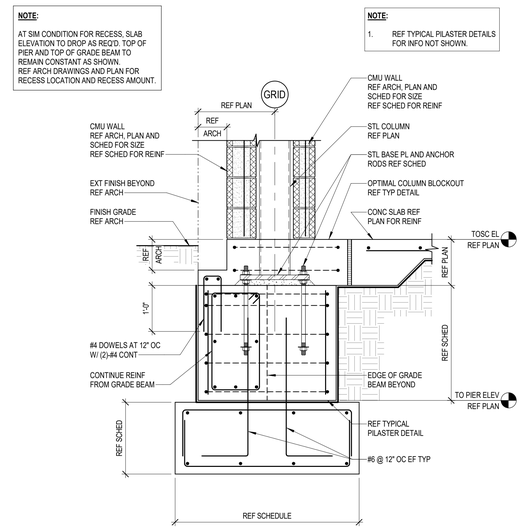

1 EXTERIOR COLUMN AT PILASTER
3/4" = 1'-0"

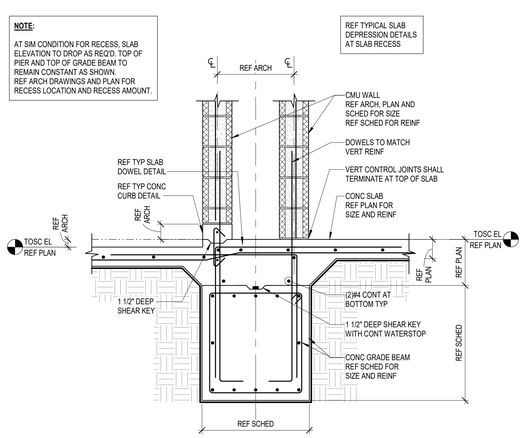

2 INTERIOR DOUBLE CMU WALLS W/ CONC CURB
3/4" = 1'-0"

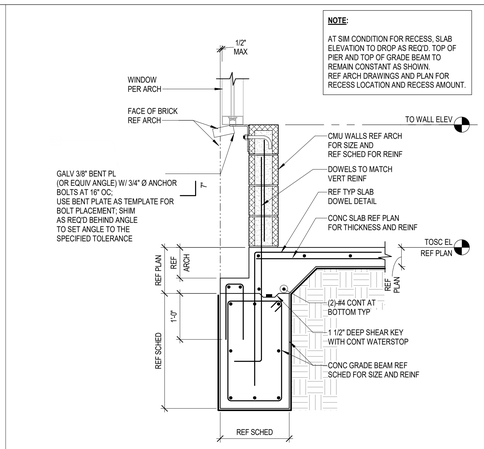

3 CMU AT WINDOW
3/4" = 1'-0"

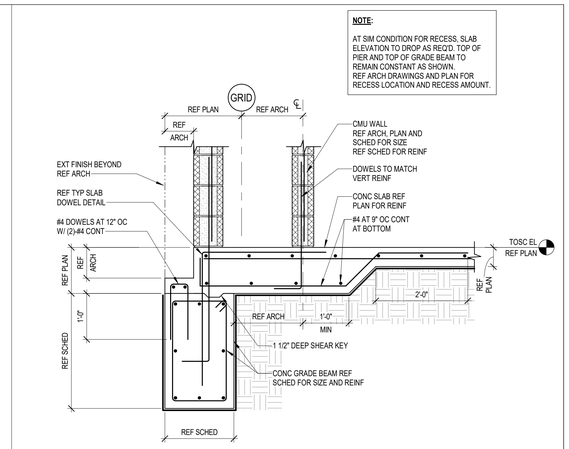

4 EXTERIOR GRADE BEAM AND THICKENED SLAB AT DOUBLE CMU WALLS
3/4" = 1'-0"

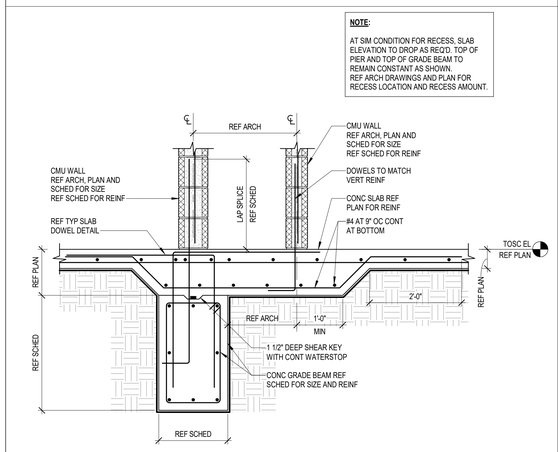

5 INTERIOR GRADE BEAM AND THICKENED SLAB AT DOUBLE CMU WALLS
3/4" = 1'-0"

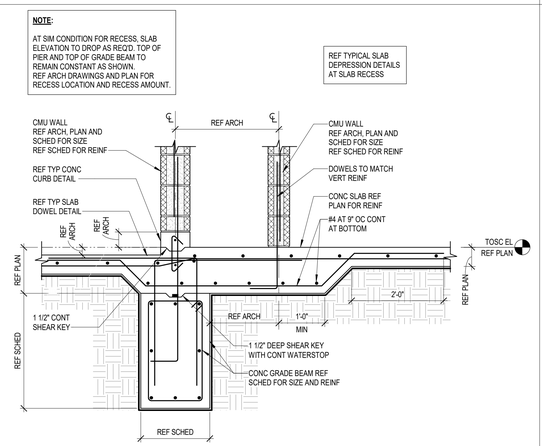

6 INTERIOR GRADE BEAM AND THICKENED SLAB AT DOUBLE CMU WALLS W/ CONC CURB AND RECESS
3/4" = 1'-0"

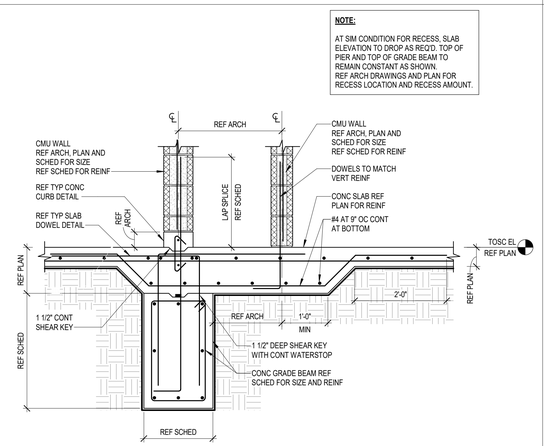

7 INTERIOR GRADE BEAM AND THICKENED SLAB AT DOUBLE CMU WALLS W/ CONC CURB
3/4" = 1'-0"

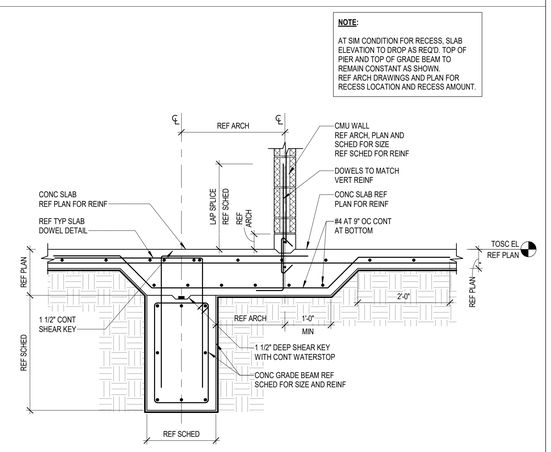

8 INTERIOR GRADE BEAM AND THICKENED SLAB AT CMU WALL W/ CONC CURB
3/4" = 1'-0"

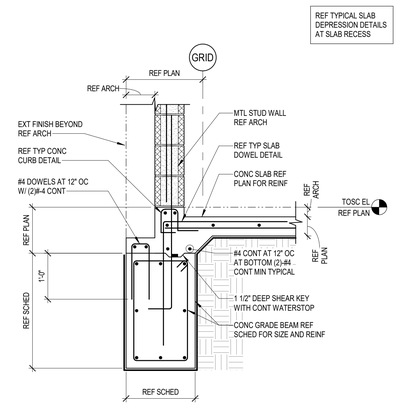

9 EXTERIOR GRADE BEAM AT SLAB DEPRESSION
3/4" = 1'-0"

Kubala ENGINEERS
Ph: (800)246-3674
www.kubalaengineers.com
TX: REG. NO. F-23612

PBK
www.pbk.com
TX FIRM: BR 1608
HOUSTON, TX
713-365-0608

PKG 3A GPHS - Fieldhouse

1000 Keene St,
Galena Park, TX 77547

CLIENT PROJECT NO: 240539

ISSUE FOR PROPOSAL

KEY PLAN
NORTH: PLAN TRUE

STATE OF TEXAS
JOHN R. KUBALA
106120
06/10/2025
Kubala Engineers
F-23612

CLIENT	
Galena Park ISD	
DATE 06/10/2025	PROJECT NUMBER 240539

DRAWING HISTORY

No.	Description	Date

CHECKED BY: SI
DRAWN BY: CML

FOUNDATION DETAILS (CMU)

S-314

Plot Stamp:
6/9/2025 5:32:27 PM

ELEVATOR PIT DETAILS
S-315
FOR BLUEBEAM LABELING/OCR:

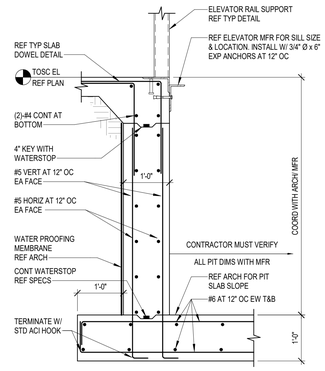

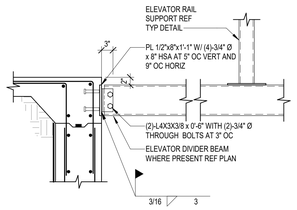

TYPICAL ELEVATOR DIVIDER BEAM AND GUIDE RAIL CONNECTION

1 ELEVATOR PIT
3/4" = 1'-0"

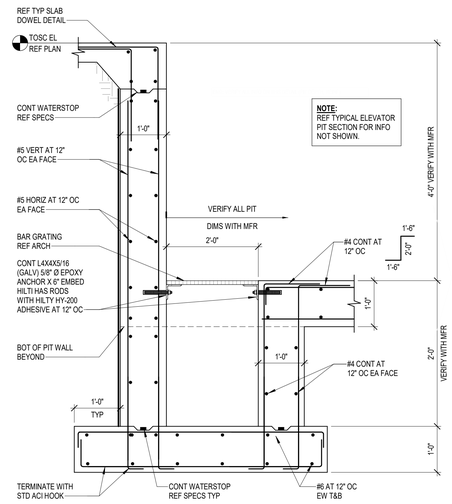

NOTE:
REF TYPICAL ELEVATOR PIT SECTION FOR INFO NOT SHOWN.

2 ELEVATOR SUMP PIT
3/4" = 1'-0"

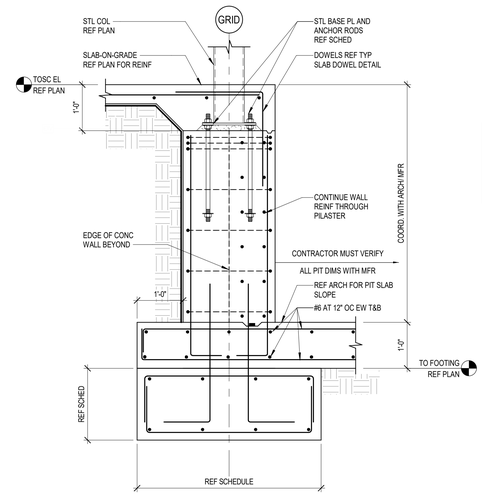

NOTES:

1. REF 1/S-315 AND 2/S-315 FOR ADDITIONAL INFO NOT SHOWN OR ANNOTATED HERE.
2. SIM MEANS DEPRFSSION ON TERRAZZO SIDE. REF ARCH FOR AMOUNT AND LOCATION OF DEPRESSION.

3 ELEVATOR PIT AT COLUMN
NO SCALE

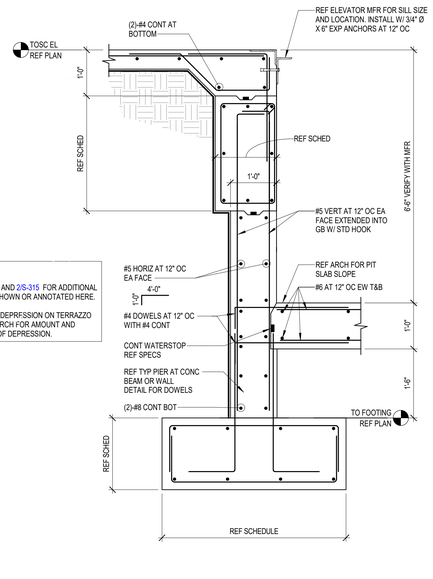

NOTES:

1. REF 1/S-315 AND 2/S-315 FOR ADDITIONAL INFO NOT SHOWN OR ANNOTATED HERE.
2. SIM MEANS DEPRFSSION ON TERRAZZO SIDE. REF ARCH FOR AMOUNT AND LOCATION OF DEPRESSION.

4 ELEVATOR PIT AT GRADE BEAM
NO SCALE

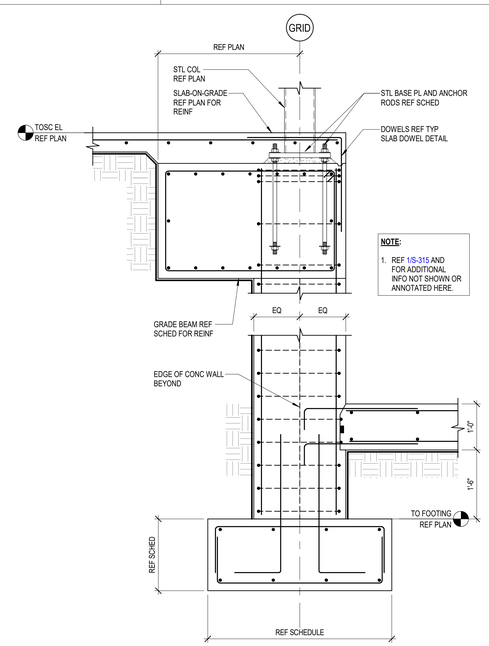

NOTE:

1. REF 1/S-315 AND FOR ADDITIONAL INFO NOT SHOWN OR ANNOTATED HERE.

5 ELEVATOR PIT AT GRADE BEAM AND COLUMN
NO SCALE

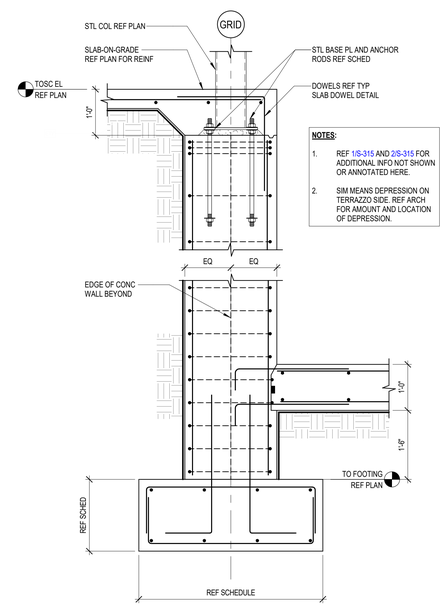

NOTES:

1. REF 1/S-315 AND 2/S-315 FOR ADDITIONAL INFO NOT SHOWN OR ANNOTATED HERE.
2. SIM MEANS DEPRESSION ON TERRAZZO SIDE. REF ARCH FOR AMOUNT AND LOCATION OF DEPRESSION.

6 ELEVATOR PIT AT COLUMN
NO SCALE

Kubala ENGINEERS
Ph: (800)246-3074
www.kubalaengineers.com
TX. REG. NO. F-23612

PBK
www.pbk.com
TX FIRM: BR 1608
HOUSTON, TX
713-966-0608

PKG 3A GPHS - Fieldhouse

1000 Keene St.
Galena Park, TX 77547

CLIENT PROJECT NO: 240539

ISSUE FOR PROPOSAL

KEY PLAN
NORTH: PLAN TRUE

STATE OF TEXAS
JOHN R. KUBALA
106120
06/10/2025
Kubala Engineers
F-23612

CLIENT	
Galena Park ISD	
DATE 06/10/2025	PROJECT NUMBER 240539

DRAWING HISTORY

No.	Description	Date

CHECKED BY: SI
DRAWN BY: CML

ELEVATOR PIT DETAILS

S-315

Plot Stamp:
6/9/2025 5:32:27 PM

SITE ITEMS FOUNDATION SECTIONS AND DETAILS
S-320
FOR BLUEBEAM LABELING/OCR:

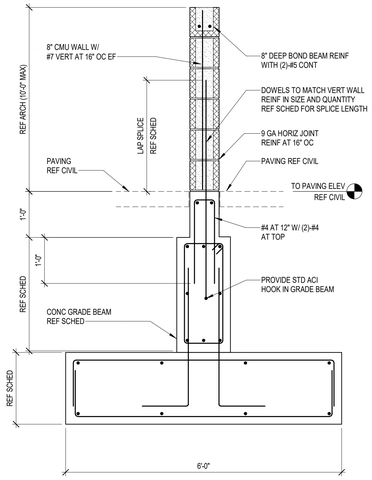

1 SCREEN WALL AT MECH YARD
3/4" = 1'-0"

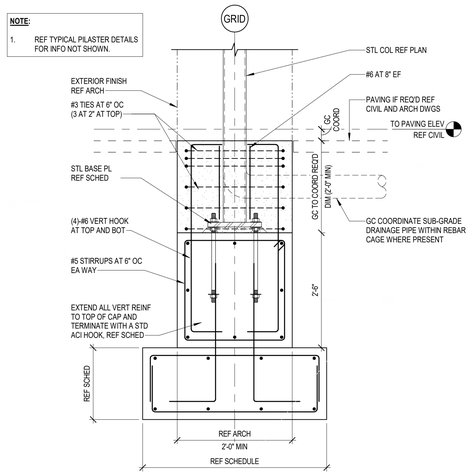

2 EXTERIOR COLUMN DETAIL
3/4" = 1'-0"

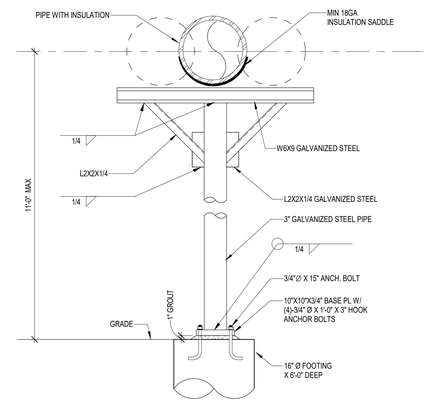

3 SINGLE COLUMN PIPE STANCHION DETAIL
NO SCALE

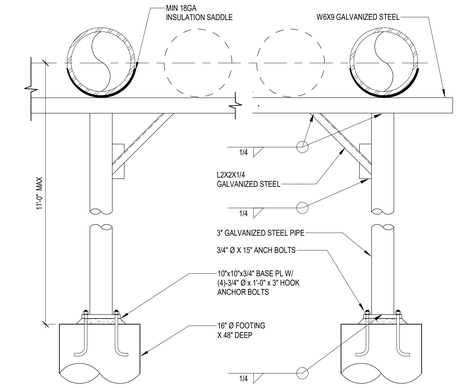

4 DOUBLE PIPE STANCHION PIPE SUPPORT DETAIL
NO SCALE

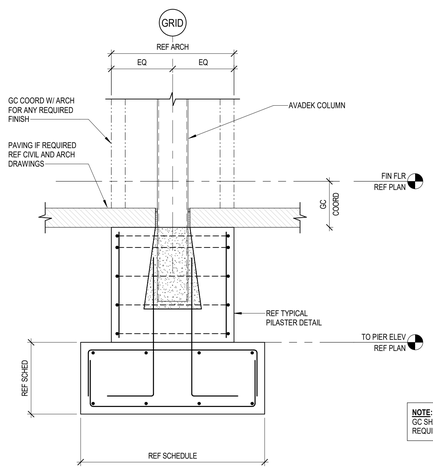

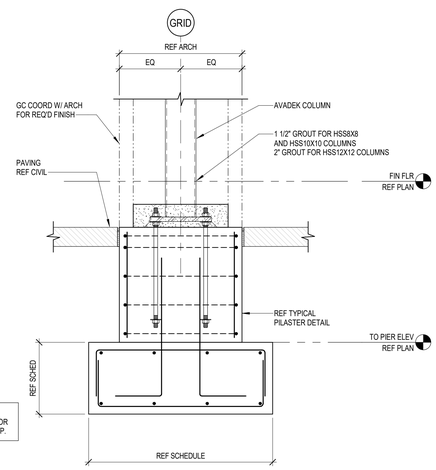

NOTE:
GC SHALL COORDINATE WITH AVADEK FOR REQUIRED COLUMN BASE CONDITION TYP.

5 TYP AVADEK CANOPY COLUMN DETAIL
3/4" = 1'-0"

Kubala ENGINEERS
Ph: (800)248-3674
www.kubalaengineers.com
TX. REG. NO. F-23612

PBK
www.pbk.com
TX FIRM: BR 1608
HOUSTON, TX
713-365-0608

PKG 3A GPHS - Fieldhouse

1000 Keene St.
Galena Park, TX 77547

CLIENT PROJECT NO: 240539

ISSUE FOR PROPOSAL

KEY PLAN
NORTH: PLAN TRUE

STATE OF TEXAS
JOHN R. KUBALA
106120
06/10/2025
Kubala Engineers
F-23612

CLIENT	
Galena Park ISD	
DATE 06/10/2025	PROJECT NUMBER 240539

DRAWING HISTORY

No.	Description	Date

CHECKED BY: SI
DRAWN BY: CML

SITE ITEMS FOUNDATION SECTIONS AND DETAILS

S-320

Plot Stamp:
6/9/2025 5:32:28 PM

GENERAL CMU NOTES AND TYP DETAILS
S-400

FOR BLUEBEAM LABELING/OCR:

0"
1"

MASONRY:

1. MASONRY TESTING SHALL CONSIST OF A QUALIFIED TESTING LABORATORY PROVIDING THE FOLLOWING SERVICES:
   - A. OBSERVE THE INSTALLATION OF MASONRY UNITS.
   - B. VERIFY THE QUANTITY, SIZE AND THE SPACING OF THE REQUIRED REINFORCING THAT IS SHOWN ON THE DRAWINGS.
   - C. INSPECT THE GROUT SPACE PRIOR TO THE CLOSING OF CLEANOUTS AND ALL GROUTING OPERATIONS. VERIFY THAT THE SPECIFIED CELLS ARE FULLY GROUTED AS NOTED.
   - D. MONITOR THE PROPORTIONING, MIXING AND CONSISTENCY OF MORTAR AND GROUT. PROVIDE 28 DAY COMPRESSIVE STRENGTH TESTS ON EACH GROUT MIX IN ACCORDANCE WITH ASTM C1019. PROVIDE COMPRESSION TESTS ON MASONRY PRISMS FOR EACH TYPE OF WALL CONSTRUCTION, IN ACCORDANCE WITH ASTM C1314. CONTRACTOR SHALL PREPARE ONE SET FOR TESTING AT 28 DAYS. TESTS ARE TO BE CONDUCTED FOR EACH 2000 SQUARE FEET OF WALL INSTALLED, BUT NOT LESS THAN TWO TESTS.

MASONRY NOTES:

MATERIALS:

1. ALL CONCRETE MASONRY UNITS (CMU) SHALL CONFORM TO ASTM C90, TYPE 1, GRADE N, AND THE QUALITY CONTROL STANDARDS OF THE NATIONAL CONCRETE MASONRY ASSOCIATION.
2. ALL CONCRETE MASONRY UNITS SHALL BE MEDIUM WEIGHT (105 TO LESS THAN 125 PCF, OVEN DRY UNIT DENSITY).
3. ALL MASONRY UNITS SHALL HAVE A MAXIMUM LINEAR SHRINKAGE OF .06 OF 1% FROM THE SATURATED TO THE OVEN DRY CONDITION, WHEN TESTED WITH THE METHODS SET FORTH IN THE QUALITY CONTROL STANDARDS OF THE NATIONAL CONCRETE MASONRY ASSOCIATION.
4. MASONRY UNITS SHALL HAVE CURED FOR NOT LESS THAN 28 DAYS WHEN PLACED IN THE STRUCTURE.

COMPRESSIVE STRENGTHS:

1. THE MINIMUM COMPRESSIVE STRENGTH OF MASONRY (f'm) SHALL BE 2000 PSI AS DETERMINED BY THE UNIT STRENGTH METHOD OR BY THE PRISM TEST METHOD.
2. ALL MASONRY UNITS SHALL HAVE A MINIMUM NET COMPRESSIVE STRENGTH OF 2500 PSI AND A MINIMUM NET TENSILE STRENGTH OF 125 PSI, WHEN TESTED IN ACCORDANCE WITH THE METHODS SET FORTH IN THE QUALITY CONTROL STANDARDS OF THE NATIONAL CONCRETE MASONRY ASSOCIATION.

MORTAR:

1. UNLESS NOTED OTHERWISE, MORTAR SHALL CONFORM TO ASTM C270, TYPE 'S'. MORTAR SHALL BE FRESHLY PREPARED AND UNIFORMLY MIXED IN THE RATIO OF 1 PART PORTLAND CEMENT, 1/4 PART MINIMUM TO 1/2 PART MAXIMUM LIME PUTTY OR HYDRATED LIME, DAMP LOOSE SAND NOT LESS THAN 2-1/4 AND NOT MORE THAN 3 TIMES THE SUM OF THE VOLUMES OF THE CEMENT AND LIME USED.

GROUT:

1. GROUT FOR POURING SHALL BE OF FLUID CONSISTENCY AND MIXED IN THE RATIO BY VOLUMES, 1 PART PORTLAND CEMENT, 2 1/4 PARTS MINIMUM TO 3 PARTS MAXIMUM DAMP LOOSE SAND, 1 PART MINIMUM TO 2 PARTS MAXIMUM PEA GRAVEL, AND 0 TO 1/10 PART MAXIMUM HYDRATED LIME. GROUT SHALL ATTAIN A MINIMUM COMPRESSIVE STRENGTH OF 2500 PSI, WHEN TESTED IN ACCORDANCE WITH ASTM C476.
2. GROUT FOR PUMPING SHALL BE OF FLUID CONSISTENCY AND SHALL HAVE NO LESS THAN 7 SACKS OF CEMENT IN EACH CUBIC YARD OF GROUT. SUBMIT THE MIX FOR APPROVAL.
3. ALL CELLS WITH REINFORCING BARS SHALL BE GROUTED SOLID.
4. ALL CELLS THAT WILL HAVE DRILLED EXPANSION ANCHORS, EMBEDDED HEADED STUDS OR OTHER EMBEDDED ANCHORS MUST BE GROUTED SOLID.

REINFORCEMENT:

1. PROVIDE HORIZONTAL JOINT REINFORCING (TRUSS OR LADDER TYPE, 9 GAGE) AT 16" OC VERTICALLY AT ALL CMU WALLS. PROVIDE PRE-FAB WIRE TIES AT ALL CORNERS AND INTERSECTIONS AT 16" O.C. REINFORCEMENT SHALL CONFORM TO ASTM A82 WITH A MINIMUM YIELD STRENGTH OF 60,000 PSI, AND SHALL BE HOT DIPPED GALVANIZED.
2. OPENINGS IN MASONRY WALLS SHALL HAVE EITHER MASONRY OR STEEL LINTELS AS SHOWN ON THE DRAWINGS. ALL HORIZONTAL REINFORCING IN BOND BEAMS AND LINTEL BLOCKS SHALL BE CONTINUOUS, AND GROUTED SOLID. WHEN NO LINTEL IS DETAILED, A MINIMUM OF (2)-#4 BARS IN A LINTEL BLOCK SHALL BE INSTALLED. THE BARS SHALL EXTEND A MINIMUM OF EIGHT INCHES BEYOND THE EDGE OF THE OPENING, AND EACH JAMB SHALL BE GROUTED SOLID FOR A DISTANCE OF EIGHT INCHES WITH (2)-#5 VERTICAL MINIMUM. STEEL LINTELS SHALL BEAR 8" MINIMUM AT EACH END. PROVIDE VERTICAL CONTROL JOINTS AT THE ENDS OF ANY STEEL LINTEL, UNLESS 15# FELT OR FLASHING IS PROVIDED AT THE TOP AND BOTTOM OF THE LINTEL ANGLE WHERE THE ANGLE BEARS ON BRICK.
3. LINTEL BLOCKS SHALL BE "U" SHAPED UNITS WITH SOLID BOTTOMS AND ARE TO BE USED OVER WINDOW AND DOOR OPENINGS. BOND BEAM BLOCKS SHALL BE OPEN BOTTOM UNITS AND ARE TO BE USED AT THE TOPS OF WALLS AND AT THE MID-HEIGHT, UNLESS THE WALL HEIGHT EXCEEDS 16 FEET, IN WHICH BOND BEAMS SHALL BE PROVIDED 8'-0" ON CENTER VERTICALLY MAXIMUM. UNLESS SHOWN OTHERWISE ON THE DRAWINGS. PROVIDE (2)-#4 BARS IN A SOLID GROUTED BOND BEAM UNLESS NOTED OTHERWISE. LINTEL BLOCKS SHALL NOT BE USED IN PLACE OF BOND BEAM BLOCKS.
4. ALL MASONRY TIES TO BACKUP STRUCTURE SHALL BE HOT DIP GALVANIZED. UNLESS OTHERWISE NOTED ON THE DRAWINGS, PROVIDE HECKMANN NO. 315 ANCHOR WITH NO. 316 TRIANGULAR TIE ON COLUMNS AT 16" ON CENTER VERTICALLY AND A HECXMANN NO. 357 ANCHOR ON ALL BEAMS AT 16" ON CENTER HORIZONTALLY. MASONRY TIES TO WALL STUDS SHALL BE HECKMANN NO. 316 TRIANGULAR TIE WITH HECKMANN NO. 315-C SCREW ON ANCHOR STRAP SPACED 16" ON CENTER HORIZONTALLY VERTICALLY. AT WALL CORNERS, INTERSECTIONS AND OPENINGS, PROVIDE TWO VERTICAL ROWS OF ANCHORS SPACED 16" APART AND 16" ON CENTER VERTICALLY. TRIANGULAR TIES SHALL EXTEND 3/4" FROM FACE OF MASONRY. ANCHOR STRAPS SHALL BE ATTACHED TO METAL STUDS WITH TWO (2)-#10-16x1 1/2" CADMIUM PLATED SHEET METAL SCREWS.
5. AT FREE VERTICAL EDGES OF WALLS, AND AT THE FIRST CELL EACH SIDE OF CONTROL JOINTS, PROVIDE (1) VERTICAL IN GROUT FILLED END CORES. THE VERTICAL REINFORCING SHALL MATCH TYPICAL VERTICAL WALL REINFORCING UNLESS NOTED OTHERWISE, AND SHALL EXTEND TO THE TOP OF THE WALL.
6. UNLESS OTHERWISE SHOWN ON THE DRAWINGS, PROVIDE A MINIMUM OF #4 VERTICAL BARS AND DOWELS IN FULLY GROUTED CELLS AT 48" O.C.
7. ALL BAR REINFORCING SHALL BE LAPPED AS FOLLOWS:
   - #3 LAP SPLICE LENGTH = 19 INCHES
   - #4 LAP SPLICE LENGTH = 34 INCHES
   - #5 LAP SPLICE LENGTH = 45 INCHES
   - #6 LAP SPLICE LENGTH = 54 INCHES
   - #7 LAP SPLICE LENGTH = 63 INCHES
   - #8 LAP SPLICE LENGTH = 72 INCHES
   - #9 LAP SPLICE LENGTH = 82 INCHES
   - INCREASE LAP SPLICE LENGTHS BY 50% FOR EPOXY COATED REINFORCING

MISCELLANEOUS:

1. ALL MASONRY DESIGN IS BASED ON CHAPTER 21 OF INTERNATIONAL BUILDING CODE, LATEST EDITION AND ACI 530, LATEST EDITION.
2. SEE TYPICAL DETAILS FOR INTERIOR WALL BRACING, AND REINFORCING REQUIREMENTS.
3. UNLESS NOTED OTHERWISE PER PLANS, SPECS OR DETAILS, MASONRY WALLS SHALL HAVE VERTICAL CONTROL JOINTS PER NCMA GUIDELINES TEK 10-2C AS FOLLOWS:
   - AT APPROXIMATELY SIXTEEN FEET ON CENTER
   - CORNERS-AT A MAXIMUM DISTANCE NOT TO EXCEED ONE-HALF THE REQUIRED MAXIMUM DISTANCE
   - BETWEEN MAIN AND INTERSECTING WALLS
   - CHANGES IN WALL HEIGHTS
   - ADJACENT TO LINTELS AND THROUGH OPENINGS IF NOT CROSSING VERTICAL REINFORCEMENT
   - AT PILASTERS AND CHANGES IN WALL THICKNESS
   - ALL JOINT LOCATIONS SHALL BE COORDINATED WITH THE ARCHITECT.
4. UNLESS NOTED OTHERWISE PER PLANS, SPECS OR DETAILS, BRICK VENEER CONTROL JOINTS SHALL BE PER BIA GUIDELINES-TECHNICAL NOTE 18A.
   - WITHOUT OPENINGS, SPACE NO MORE THAN 25 FT
   - WITH MULTIPLE OPENINGS, SPACE NO MORE THAN 20 FT
     - AT OR NEAR CORNERS
     - AT OFFSETS AND SETBACKS
     - AT WALL INTERSECTIONS
     - AT CHANGES IN WALL HEIGHTS
     - AT WALL BACKING SYSTEM CHANGES (CMU TO DRYWALL)
     - AT SUPPORT CHANGES (CONCRETE TO STEEL)
     - AT WALL FUNCTION OR CLIMATIC EXPOSURE CHANGES (INTERIOR TO EXTERIOR)
5. GROUT LIFT LIMITS
   - GROUT POURS SHALL NOT EXCEED 5 FEET PER LIFT WHEN GROUTING THE CELLS OF REINFORCED CMU, UNLESS CLEANOUTS ARE PROVIDED IN THE BOTTOM COURSE OF EACH 5 FOOT SECTION.
   - GROUT POURS SHALL NOT EXCEED 24 FEET WHEN GROUTING THE CELLS OF HOLLOW CMU. WHEN GROUTING THE SPACE BETWEEN MULTI-WYTHE WALLS, THE TOTAL POUR SHALL NOT EXCEED 24 FEET FOR 3" SPACES, 12 FEET FOR 2 1/2" SPACES, AND 5 FEET FOR 2" SPACES.
   - MECHANICALLY VIBRATE ALL LIFTS IN EXCESS OF 1 FOOT.
   - ALL GROUT MUST BE PLACED WITHIN 1 1/2 HOURS FROM INTRODUCING WATER INTO THE MIXTURE.
   - GROUT LIFTS SHALL NOT BE STOPPED WITHIN 1 1/2" OF BED JOINT.
   - ALL CMU WALLS LOCATED ADJACENT TO EARTH FILL MUST BE FULLY GROUTED DIRECTLY ADJACENT TO, AND AT EAST 8" ABOVE, ALL SOIL IN CONTACT WITH THE WALL.

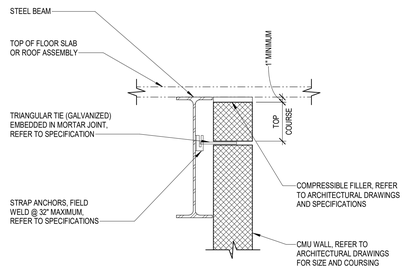

NOTE:

1. THIS DETAIL IS TO BE USED ONLY IF INTERSECTING SUPPORT WALLS EXCEED A SPACING OF 36 TIMES THE NOMINAL WALL THICKNESS. USE OF THIS DETAIL IS LIMITED TO WALL HEIGHTS UP TO 36 TIMES THE NOMINAL WALL THICKNESS.

1 TYPICAL INTERIOR NON-BEARING CMU WALL SIDE CONNECTION
NO SCALE

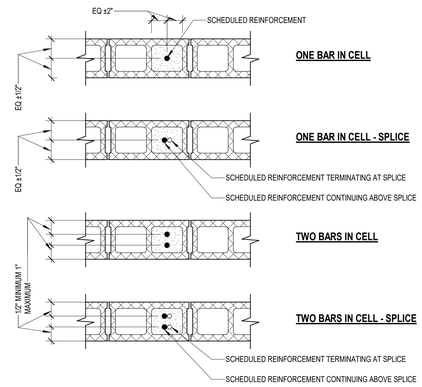

2 TYPICAL CMU VERTICAL BAR PLACEMENT
NO SCALE

NOTES:

1. REINFORCEMENT MUST BE PLACED USING REINFORCING BAR POSITIONERS THAT LOCATE THE BAR AS SPECIFIED AND PREVENT MOVEMENT OF THE BAR DURING CONSTRUCTION.
2. SPLICED REINFORCEMENT MUST BE A CONTACT LAP SPLICE WITH SPLICED BARS ALIGNED PARALLEL TO THE WALL AS SHOWN.
3. THE ENGINEER MUST BE NOTIFIED PRIOR TO PLACEMENT OF REINFORCEMENT THAT IS REQUIRED TO BE PLACED OUTSIDE OF THE TOLERANCES OF THIS DETAIL SUCH AS TO AVOID INTERFERENCE WITH OTHER REINFORCEMENT, CONDUITS, OR EMBEDDED ITEMS.

BRACE FRAMING (3 5/8" STUDS)

STUD TYPE	STUD PROPERTIES	SPACING	MAX LENGTH	MISCELLANEOUS
SJ 20 (40 KSI)	Ix = 0.541 IN^4	4'-0" OC	14'-0"	BRACE @ MID-PT FOR LENGTHS OVER 14'-0"
	rx = 1.429 IN			
	A = 0.2136 IN^2			
	Sx = 0.273 IN^3			

BRACE FRAMING (6" STUDS)

STUD TYPE	STUD PROPERTIES	SPACING	MAX LENGTH	MISCELLANEOUS
SJ 20 (40 KSI)	Ix = 1.787 IN^4	4'-0" OC	20'-0"	BRACE @ MID-PT FOR LENGTHS OVER 20'-0"
	rx = 2.253 IN			
	A = 0.2148 IN^2			
	Sx = 0.539 IN^3			

VERTICAL FRAMING (3 5/8" STUDS)

STUD TYPE	STUD PROPERTIES	SPACING	MAX LENGTH	MISCELLANEOUS
ST 25 (33 KSI)	Ix = 0.239 IN^4	1'-4" OC	16'-9"	ONE LAYER SHEATHING (MIN) *
	rx = 1.415 IN			
	A = 0.123 IN^2			
	Sx = 0.113 IN^3			
ST 20 (33 KSI)	Ix = 0.414 IN^4	1'-4" OC	22'-6"	ONE LAYER SHEATHING (MIN) *
	rx = 1.407 IN			
	A = 0.210 IN^2			
	Sx = 0.213 IN^3			

*OR PROVIDE 1 1/2x1 1/2x16 GA HORIZONTAL CHANNEL FASTENED TO STUDS WITH 1 1/2x1 1/2x14 GA CLIP AT 4'-0" OC VERTICALLY

VERTICAL FRAMING (6" STUDS)

STUD TYPE	STUD PROPERTIES	SPACING	MAX LENGTH	MISCELLANEOUS
ST 25 (33 KSI)	Ix = 0.773 IN^4	1'-4" OC	20'-0"	ONE LAYER SHEATHING (MIN) *
	rx = 2.209 IN			
	A = 0.167 IN^2			
	Sx = 0.184 IN^3			
ST 20 (33 KSI)	Ix = 1.385 IN^4	1'-4" OC	32'-9"	ONE LAYER SHEATHING (MIN) *
	rx = 2.199 IN			
	A = 0.288 IN^2			
	Sx = 0.437 IN^3			

*OR PROVIDE 1 1/2x1 1/2x16 GA HORIZONTAL CHANNEL FASTENED TO STUDS WITH 1 1/2x1 1/2x14 GA CLIP AT 4'-0" OC VERTICALLY

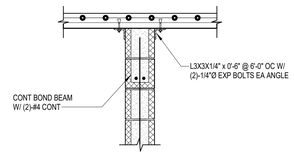

TYPE A (FLOOR)

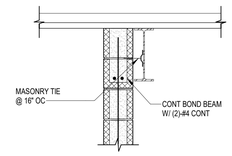

TYPE D (FLOOR / ROOF)

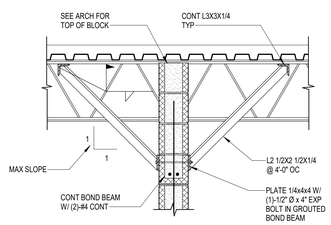

TYPE B (FLOOR / ROOF)

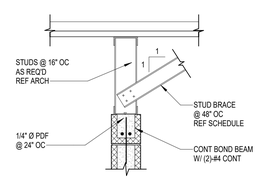

TYPE E (FLOOR / ROOF)

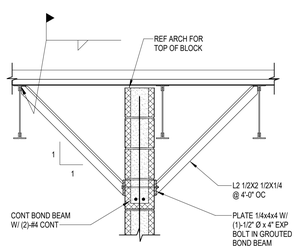

TYPE C (FLOOR / ROOF)

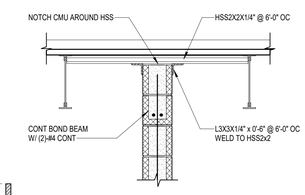

TYPE F (FLOOR / ROOF)

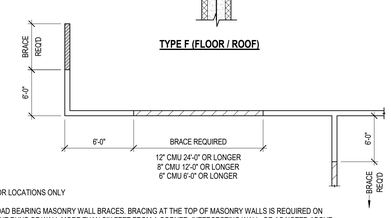

INTERIOR LOCATIONS ONLY

NON-LOAD BEARING MASONRY WALL BRACES. BRACING AT THE TOP OF MASONRY WALLS IS REQUIRED ON STRAIGHT RUNS OF WALL MORE THAN SIX FEET FROM A CORNER, INTERSECTING WALL, OR AS NOTED ABOVE.

WHEN THE MASONRY WALL TERMINATES AT THE BOTTOM OF THE DECK, A TYPE 'A' ATTACHMENT AT THE FLOOR DECK OR A TYPE 'B', 'C', 'D' OR 'F' ATTACHMENT AT EITHER THE FLOOR OR ROOF MAY BE USED. WHEN WALLS TERMINATE ABOVE THE CEILING A TYPE 'B', 'C' OR 'E' ATTACHMENT SHOULD BE USED.

5 TYPICAL NON-STRUCTURAL CMU WALL BRACE CONNECTIONS
NO SCALE

TYPICAL CMU WALL BRACING LOCATION PLAN

NOTES:

1. SEE ARCHITECTURAL DRAWINGS FOR SIZE AND LOCATIONS OF OPENINGS. PROVIDE BLOCK LINTELS FOR ALL OPENINGS AT INTERIOR AND EXTERIOR WALLS FOR WHICH A STEEL LINTEL IS NOT SCHEDULED.
2. PROVIDE 1" OF BEARING @ EACH JAMB FOR EACH FOOT OF CLEAR SPAN BUT NOT LESS THAN 8". REINFORCING SHALL EXTEND A MINIMUM OF 6" ONTO THE BEARING.
3. FOR REINFORCED CMU WALLS AT OPENINGS, PROVIDE EXTRA REINFORCED GROUTED FULL HEIGHT CONSECUTIVE CELLS EACH SIDE OF THE OPENING EQUAL TO ONE HALF OF THE TOTAL NUMBER OF CELLS INTERRUPTED BY THE OPENING. REINFORCE EACH CELL WITH THE SAME SIZE AND NUMBER OF BARS AS SPECIFIED FOR THE INTERRUPTED CELLS. PROVIDE A MINIMUM OF (2) REINFORCED GROUTED CELLS EACH SIDE OF OPENING. REFER TO TYPICAL CMU WALL OPENING DIAGRAM AND SCHEDULE FOR ADDITIONAL INFORMATION.
4. AS AN ALTERNATIVE TO USING A FILLED CMU BLOCK LINTEL (PER THE SCHEDULE ABOVE) FOR OPENINGS 5'-0" AND LESS, CONTRACTOR MAY USE CAST CRETE LINTEL (8U8).

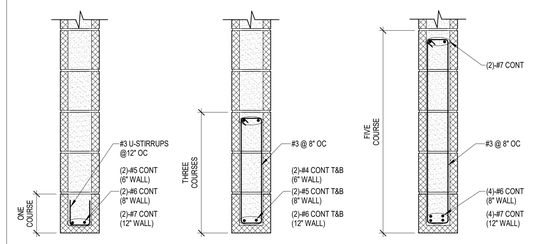

3 MASONRY LINTEL SCHEDULE
NO SCALE

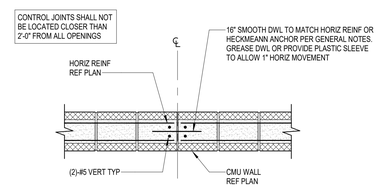

4 TYPICAL CONTROL JOINT DETAIL
NO SCALE

Kubala ENGINEERS
Ph: (800)246-3674
www.kubalaengineers.com
TX. REG. NO. F-23612

PBK
www.pbk.com
TX FIRM: BR 1608
HOUSTON, TX 713-965-0608

PKG 3A GPHS - Fieldhouse

1000 Keene St.
Galena Park, TX 77547

CLIENT PROJECT NO: 240539

ISSUE FOR PROPOSAL

Galena Park ISD — BUILDING IN ALL FOR ALL KIDS

KEY PLAN
NORTH: PLAN TRUE

STATE OF TEXAS
JOHN R. KUBALA
106120
06/10/2025
Kubala Engineers
F-23612

CLIENT	
Galena Park ISD	
DATE 06/10/2025	PROJECT NUMBER 240539

DRAWING HISTORY

No.	Description	Date

CHECKED BY: SI
DRAWN BY: CML

GENERAL CMU NOTES AND TYP DETAILS

S-400

Plot Stamp:
6/9/2025 5:32:29 PM

GENERAL CMU NOTES AND TYP DETAILS
S-401

FOR BLUEBEAM LABELING/OCR:

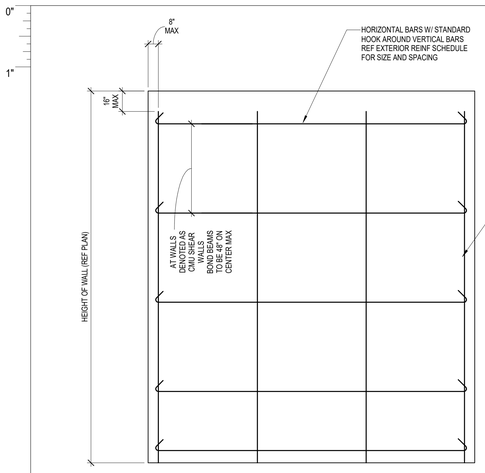

1 EXTERIOR MASONRY WALL REINF. ELEVATION
NO SCALE

	CMU (SIZE)	MEAN ROOF HEIGHT (SIMPLE SPAN, NON-LOAD BEARING)	VERT REINF (IN FULLY GROUTED CELLS)	DOWELS (4'-0" LONG MIN OR AS NEEDED FOR REQ'D LAP/EMBED)
EXTERIOR WALL	8"	16'-0"	#6 @ 24" OC	#6 @ 24" OC
	8"	>16'-0" ..... 28'-0"	#6 @ 16" OC EF	#6 @ 16" OC EF
	12"	16'-0"	#6 @ 24" OC	#6 @ 24" OC
	12"	>16'-0" ..... 28'-0"	#6 @ 16" OC EF	#6 @ 16" OC EF
INTERIOR WALL	6"	15'-0"	#5 @ 48" OC	#5 @ 48" OC
	8"	16'-0"	#6 @ 48" OC	#6 @ 48" OC
	8"	>16'-0" ..... 28'-0"	#6 @ 40" OC	#6 @ 40" OC

NOTES:

1. FOR ANY WALLS THAT DON'T MEET THE REQUIREMENTS OF THE SCHEDULE, GC TO CONTACT ENGINEER OF RECORD FOR PROPER REINFORCEMENT REQUIREMENTS.
2. THE FIRST (3) CELLS AT CORNERS (IN EA DIRECTION), ENDS OF WALLS AND EACH SIDE OF THE CONTROL JOINTS SHALL BE REINFORCED WITH THE SAME SIZE AND NUMBER OF REINFORCING BARS AS SPECIFIED FOR THE OTHER REINFORCED CELLS IN THE WALL AND GROUTED FULL.
3. AT OPENINGS, PROVIDE EXTRA REINFORCED GROUTED FULL HEIGHT CONSECUTIVE CELLS EACH SIDE OF THE OPENING EQUAL TO ONE HALF THE TOTAL NUMBER OF THE CELLS INTERRUPTED BY THE OPENING. REINFORCE EACH CELL WITH THE SAME SIZE AND NUMBER OF BARS AS SPECIFIED FOR THE INTERRUPTED CELLS. PROVIDE A MINIMUM OF (2) REINFORCED GROUTED CELLS EACH SIDE OF OPENING WITH (1) #5, (1) #6 OR (2) #6, 8" or 12" UNREINFORCED CMU WALL IN EACH GROUTED CELL RESPECTFULLY.
4. REFER TO "TYPICAL CMU WALL OPENING DIAGRAM AND SCHEDULE FOR ADDITIONAL INFORMATION.
5. HOLD VERTICAL REINFORCING IN POSITION AT TOP AND BOTTOM AND AT 8'-0" OC MAXIMUM.
6. REFER TO GENERAL NOTES, SPECIFICATIONS AND SECTIONS/DETAILS FOR INFORMATION NOT SHOWN.
7. VERTICAL BARS MAY BE SPLICED IN 8'-0" (+ or -) LENGTHS. SPLICES LOCATED IN ADJACENT CELLS SHALL BE STAGGERED SUCH THAT NOT MORE THAN 50 PERCENT OF THE BARS ARE SPLICED AT THE SAME LOCATION.
8. PROVIDE VERTICAL CONTROL JOINTS AT 5'-0" TO 8'-0" OC FROM CORNERS AND AT 15'-0" MAX IN BETWEEN. REF MISCELLANEOUS NOTE 3 ON S-400 FOR MORE INFORMATION.
9. IF AN INTERIOR NON-STRUCTURAL CMU WALL IS TALLER THAN THE OPTIONS PROVIDED IN THIS CHART THE GC SHALL INFORM THE EOR TO REVIEW AND PROVIDE ANY ADJUSTMENTS TO CMU WALL THICKNESS OR REINFORCING THAT MAY BE NEEDED. FOR BIDDING PURPOSES, FOR ANY WALLS WHICH ARE INTERIOR NON-STRUCTURAL AND ARE TALLER THAN PROVIDED BY THIS CHART THE GC SHALL ASSUME #6 BARS AT 24"OC.

2 TYPICAL NON-STRUCTURAL MASONRY WALL REINF. SCHEDULE
NO SCALE

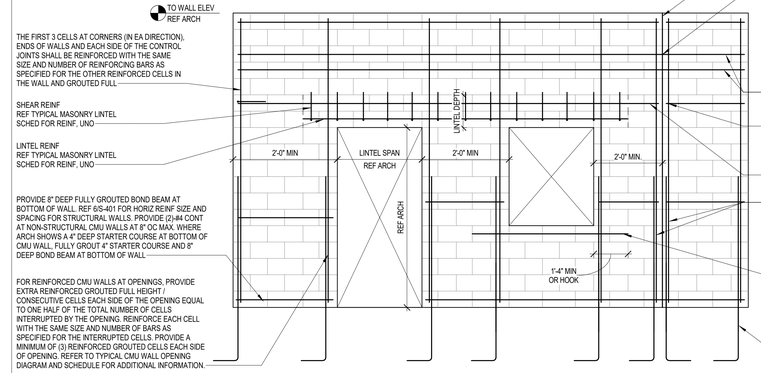

NOTES:

1. REFER TO ARCH AND MECH DRAWINGS FOR SIZE AND LOCATION OF OPENINGS.
2. REFER TO SCHEDULES FOR LINTEL AND JAMB REINFORCING UNLESS DETAILED OTHERWISE.
3. SPLICES IN VERT REINF REF CMU WALL REINF DIAGRAM.
4. CMU WALL STARTS ABOVE FLOOR.
5. EXTEND GROUTED LINTEL A MINIMUM OF 2'-0" BEYOND FACE OF OPENING EACH SIDE FOR STRAIGHT LINTEL REINF AND 1'-0" FOR LINTEL REINF WITH STANDARD ACI HOOK.
6. USE LINTEL BLOCKS ONLY FOR BOTTOM COURSE OF LINTEL BEAMS OVER OPENING. LINTEL SHALL REMAIN SHORED UNTIL MASONRY CONSTRUCTION ABOVE HAS REACHED 100% OF THE SPECIFIED 28 DAY COMPRESSIVE STRENGTH.
7. CONTINUE VERT WALL REINF OVER OPENING. ANCHOR VERT REINF INTO LINTEL BEAM WITH STANDARD ACI 90° HOOK.
8. ALL VERT BARS AT DOOR JAMBS TO BE FULL HEIGHT.
9. #5 SILL REINF. SOLID GROUT SILL.
10. WHERE HORIZONTAL REINF IS TERMINATED BY OPENING OR CONTROL JOINT PROVIDE STANDARD ACI HOOK WITH VERT WALL REINF IN THE END CELL.
11. CONTINUOUS BOND BEAM REF CMU WALL REINF DIAGRAM.

3 TYPICAL MASONRY WALL ELEVATION
NO SCALE

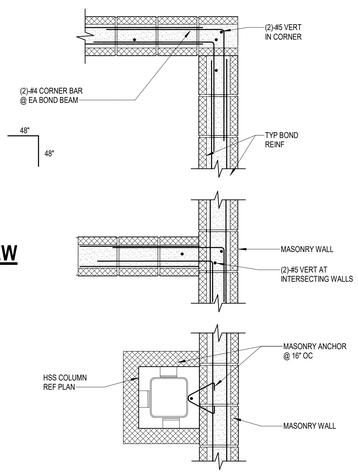

4 MASONRY WALL BRACING/REINF. DETAIL
NO SCALE

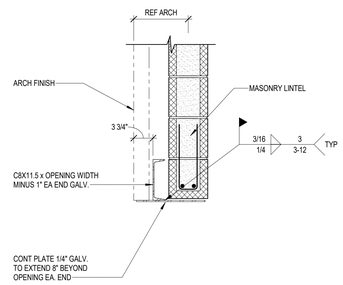

5 TYPICAL HEADER DETAIL AT OVERHEAD DOORS
NO SCALE

	SW TAG	CMU (SIZE)	MEAN ROOF HEIGHT (SIMPLE SPAN)	VERT REINF (IN FULLY GROUTED CELLS)	HORIZ REINF (IN FULLY GROUTED CELLS)	JAMB / JOINT REINF (IN FULLY GROUTED CELLS)
EXTERIOR WALL	SW1	8"	16'-0"	#6 @ 24" OC EF	#5 @ 48" OC	(2)-#5 PER CELL IN FIRST 2 CELLS
			>16'-0" ..... 28'-0"	#6 @ 16" OC EF	#5 @ 32" OC	(2)-#6 PER CELL IN FIRST 3 CELLS
	SW2	12"	16'-0"	#6 @ 40" OC EF	#5 @ 32" OC	(2)-#6 PER CELL IN FIRST 3 CELLS
			>16'-0" ..... 28'-0"	#6 @ 16" OC EF	#5 @ 32" OC EF	(2)-#6 PER CELL IN FIRST 3 CELLS
INTERIOR WALL	SW1	8"	16'-0"	#6 @ 32" OC	#5 @ 32" OC	(2)-#6 PER CELL IN FIRST 3 CELLS
			>16'-0" ..... 28'-0"	#6 @ 16" OC EF	#5 @ 32" OC	(2)-#6 PER CELL IN FIRST 3 CELLS

NOTES:

1. UNLESS NOTED OTHERWISE, REFER TO THE SCHEDULE ABOVE FOR VERTICAL WALL REINFORCING REQUIREMENTS AT ALL STRUCTURAL CMU WALLS.
2. THE STRUCTURAL MASONRY SHOWN ON THE PLANS IS PART OF THE LATERAL LOAD RESISTING SYSTEM OF THE BUILDING. THE STRUCTURAL DETAILS, INCLUDING CLIP ANGLES, DOWELS AND ADDITIONAL SECONDARY FRAMING MEMBERS, ETC., SHOWN ARE CRITICAL TO THE LATERAL PERFORMANCE OF THE BUILDING. THE TEMPORARY STEEL FRAME BRACING PROVIDED DURING CONSTRUCTION SHALL NOT BE REMOVED UNTIL ALL STRUCTURAL LATERAL BRACING SYSTEMS (INCLUDING STRUCTURAL MASONRY WALLS) HAVE BEEN INSTALLED AND CONNECTED TO THE STEEL FRAMING.
3. THE FIRST (3) CELLS AT CORNERS (IN EA DIRECTION), ENDS OF WALLS AND EACH SIDE OF THE CONTROL JOINTS SHALL BE REINFORCED WITH THE SAME SIZE AND NUMBER OF REINFORCING BARS AS SPECIFIED FOR THE OTHER REINFORCED CELLS IN THE WALL AND GROUTED FULL.
4. AT OPENINGS, PROVIDE EXTRA REINFORCED GROUTED FULL HEIGHT CONSECUTIVE CELLS EACH SIDE OF THE OPENING EQUAL TO ONE HALF THE TOTAL NUMBER OF THE CELLS INTERRUPTED BY THE OPENING. REINFORCE EACH CELL WITH THE SAME SIZE AND NUMBER OF BARS AS SPECIFIED FOR THE INTERRUPTED CELLS. PROVIDE A MINIMUM OF (2) REINFORCED GROUTED CELLS EACH SIDE OF OPENING. REFER TO "TYPICAL CMU WALL OPENING DIAGRAM AND SCHEDULE FOR ADDITIONAL INFORMATION.
5. HOLD VERTICAL REINFORCING IN POSITION AT TOP AND BOTTOM AND AT 8'-0" OC MAXIMUM.
6. REFER TO GENERAL NOTES, SPECIFICATIONS AND SECTIONS/DETAILS FOR INFORMATION NOT SHOWN.
7. VERTICAL BARS MAY BE SPLICED IN 8'-0" (+ or -) LENGTHS. SPLICES LOCATED IN ADJACENT CELLS SHALL BE STAGGERED SUCH THAT NOT MORE THAN 50 PERCENT OF THE BARS ARE SPLICED AT THE SAME LOCATION.

6 TYPICAL STRUCTURAL MASONRY SHEAR WALL REINF. SCHEDULE
NO SCALE

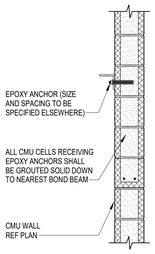

EPOXY ANCHOR SCHEDULE	
SPECIFIED DIAMETER	EMBEDMENT DEPTH
1/2" Ø	4 1/2"
5/8" Ø	5 5/8"
3/4" Ø	6 3/4"

NOTES:

1. THIS DETAIL SHALL APPLY AT ALL LOCATIONS WHERE EPOXY OR ADHESIVE ANCHORS ARE SPECIFIED WITHIN THE DRAWINGS.
2. ALL THREADED RODS FOR EPOXY ANCHORS SHALL BE MADE FROM EITHER A307 OR A36 STEEL.
3. IF GREATER EMBEDMENT DEPTHS ARE SPECIFIED IN THE DRAWINGS, THOSE EMBEDMENT DEPTHS SHALL GOVERN.
4. EPOXY ANCHORS IN CMU AND CONCRETE SHALL BE LOCATED AT LEAST 4" AWAY FROM ALL EDGES. THE CENTER TO CENTER SPACING OF EPOXY ANCHORS SHALL NOT BE LESS THAN 8". WHERE EPOXY ANCHORS ARE LOCATED IN CMU, THERE SHALL BE A MAXIMUM OF ONE ANCHOR PER CELL.
5. ALL EPOXY ANCHORS SHALL BE INSTALLED IN ACCORDANCE WITH THE MANUFACTURER'S RECOMMENDATIONS (INCLUDING HOLE DIAMETERS, HOLE CLEANING PROCEDURES, TORQUE SPECIFICATIONS, AND SPECIAL INSPECTIONS).
6. HILTI HY-200 V3 ADHESIVE ANCHORING SYSTEM SHALL BE USED AT ALL ADHESIVE ANCHORS IN CMU.

7 TYPICAL EPOXY ANCHOR DETAIL
NO SCALE

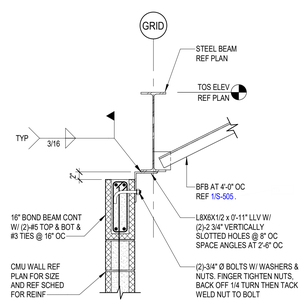

8 TYPICAL WALL BRACING AT STEEL BEAM
3/4" = 1'-0"

Kubala ENGINEERS
Ph: (800)246-3674
www.kubalaengineers.com
TX. REG. NO. F-23612

PBK
www.pbk.com
TX FIRM: BR 1608
HOUSTON, TX
713-865-6008

PKG 3A GPHS - Fieldhouse

1000 Keene St.
Galena Park, TX 77547

CLIENT PROJECT NO: 240539

ISSUE FOR PROPOSAL

KEY PLAN
NORTH: PLAN TRUE

STATE OF TEXAS
JOHN R. KUBALA
106120
06/10/2025
Kubala Engineers
F-23612

CLIENT	
Galena Park ISD	
DATE 06/10/2025	PROJECT NUMBER 240539

DRAWING HISTORY

No.	Description	Date

CHECKED BY: SI
DRAWN BY: CML

GENERAL CMU NOTES AND TYP DETAILS

S-401

Plot Stamp:
6/9/2025 5:32:29 PM

MISC CMU DETAILS
S-402

FOR BLUEBEAM LABELING/OCR:

NOTES:
1. EXTEND BOND BEAM CONTINUOUSLY BETWEEN PILASTERS FOR EACH CANOPY LEVEL.
2. GALVANIZE ALL PARTS THAT EXTEND THROUGH ARCH WALL MATERIALS.
3. CONNECTION APPLIES FOR CANOPY ROOF FRAMING BEAMS AND HANGERS.
4. SEE 7/S-402 FOR TYPICAL LINTEL WITH SHELF ANGLE.

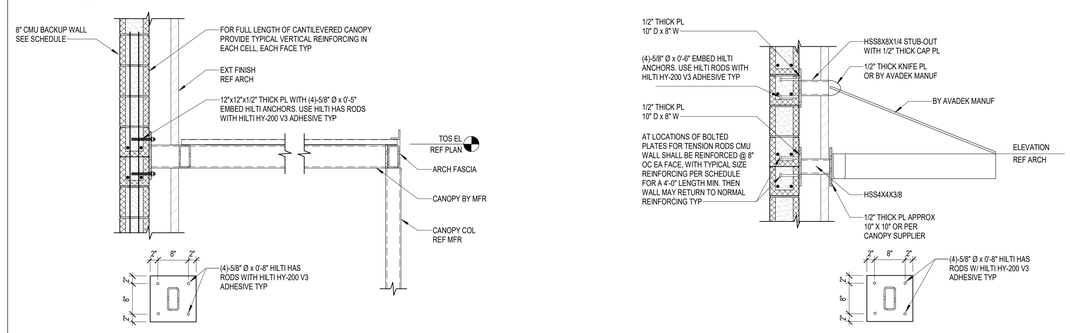

1 AVADEK CANOPY CONNECTION DETAIL
3/4" = 1'-0"

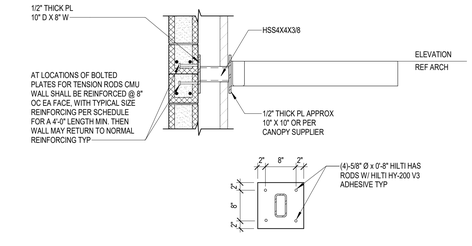

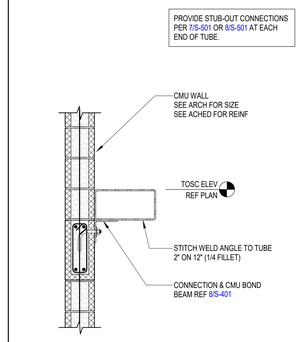

4 CMU WALL SUPPORT DETAIL
NO SCALE

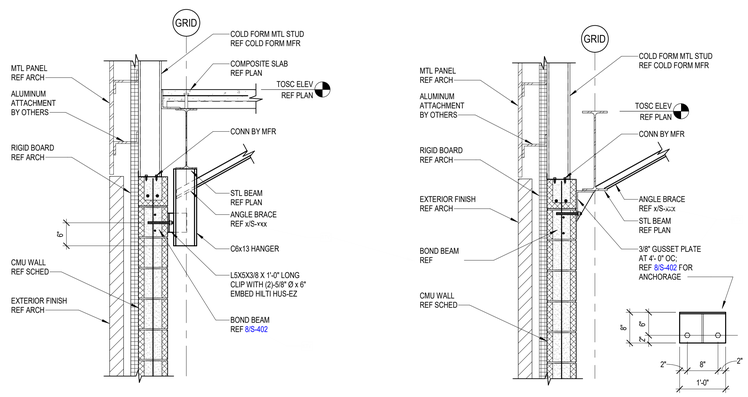

5 TYPICAL CMU TO STUD TRANSITION
NO SCALE

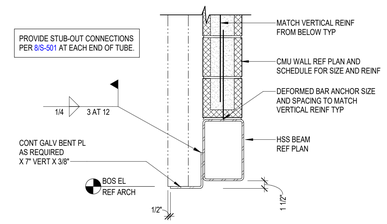

6 TYP LOW TUBE AT BRICK SUPPORT
1" = 1'-0"

NOTE:
HORIZONTAL LEG OF ANGLE OR BENT PL TO EQUAL DISTANCE FROM FACE OF BRICK TO FACE OF CMU LESS MINUS 1/2".

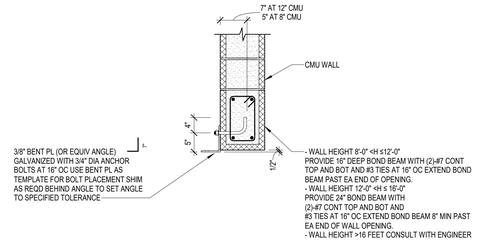

7 TYPICAL LINTEL WITH SHELF ANGLE
3/4" = 1'-0"

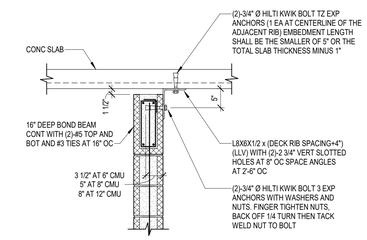

AT RIBBED SLAB PERPENDICULAR TO WALL

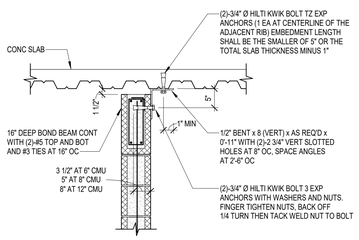

AT RIBBED SLAB PARALLEL TO WALL

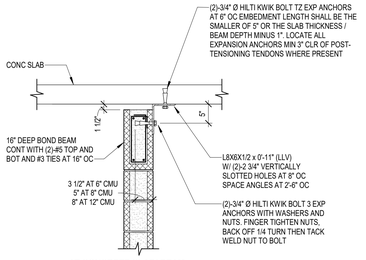

AT CONCRETE SLAB/ BEAM

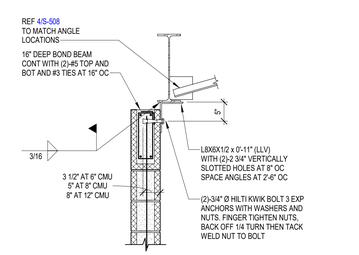

AT STEEL BEAM

8 TYPICAL BRACING AT TOP OF STRUCTURAL CMU SHEAR WALLS AND NON STRUCTURAL EXTERIOR CMU WALLS
3/4" = 1'-0"

NOTE:
REF SHEET S-400, AND DETAILS 2/S-401, 6/S-401 FOR INFO NOT SHOWN HERE.

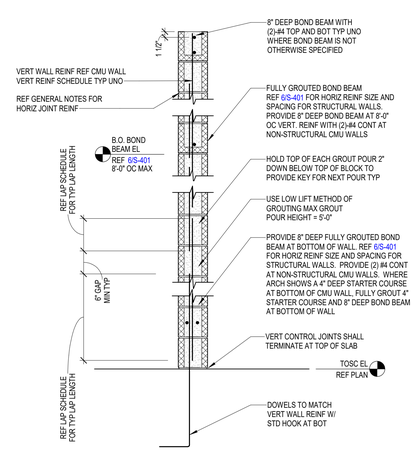

9 TYPICAL CMU WALL AT ELEVATED LEVELS
NO SCALE

NOTES:
1. EXTEND BOND BEAM CONTINUOUSLY BETWEEN PILASTERS FOR EACH CANOPY LEVEL.
2. GALVANIZE ALL PARTS THAT EXTEND THROUGH ARCH WALL MATERIALS.
3. CONNECTION APPLIES FOR CANOPY ROOF FRAMING BEAMS AND HANGERS.
4. SEE 7/S-402 FOR TYPICAL LINTEL WITH SHELF ANGLE FOR BRICK SUPPORT AT OPENINGS 8'-0" WIDE OR GREATER.

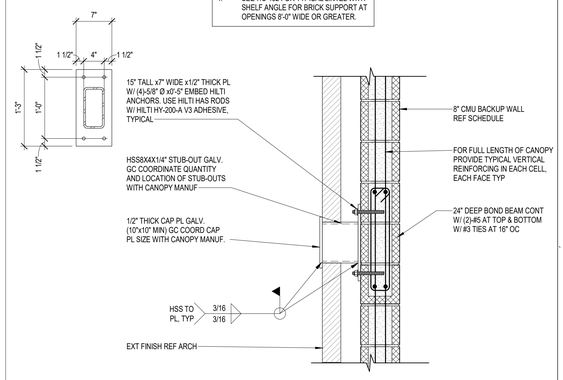

10 ALUMINUM CANOPY ATTACHMENT AT CMU
1" = 1'-0"

Kubala ENGINEERS
Ph: (800)246-3674
www.kubalaengineers.com
TX. REG. NO. F-23612

PBK
www.pbk.com
TX FIRM: BR 1608
HOUSTON, TX 713-965-0608

PKG 3A GPHS - Fieldhouse

1000 Keene St.
Galena Park, TX 77547

CLIENT PROJECT NO: 240539

ISSUE FOR PROPOSAL

Galena Park ISD — EXCELLENCE IN ALL FOR ALL STUDENTS

KEY PLAN
NORTH: PLAN TRUE

STATE OF TEXAS — JOHN R. KUBALA 106120 — PROFESSIONAL ENGINEER — 06/10/2025
Kubala Engineers F-23612

CLIENT	
Galena Park ISD	
DATE 06/10/2025	PROJECT NUMBER 240539

DRAWING HISTORY

No.	Description	Date

CHECKED BY: SI
DRAWN BY: CML

MISC CMU DETAILS

S-402

Plot Stamp:
6/9/2025 5:32:30 PM

MISC CMU DETAILS
S-403
FOR BLUEBEAM LABELING/OCR:

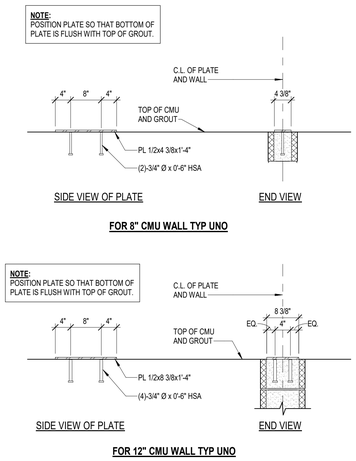

1 EMBED AT JOIST OR DECK SUPPORT ELEMENT
3/4" = 1'-0"

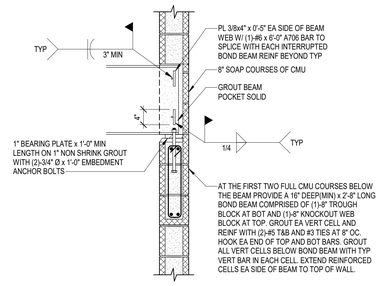

2 STEEL BEAM BEARING ON MASONRY WALL
3/4" = 1'-0"

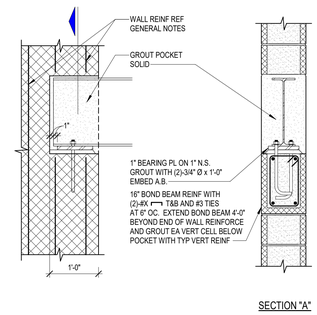

3 STEEL BEAM BEARING AT END OF MASONRY WALL
3/4" = 1'-0"

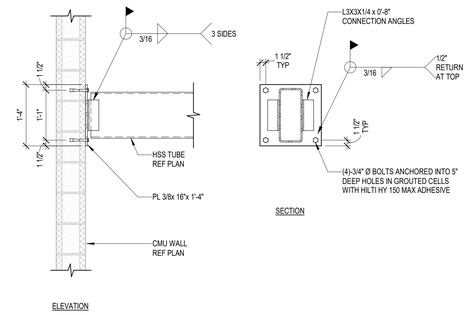

4 HSS TUBE BEARING ON MASONRY WALL
3/4" = 1'-0"

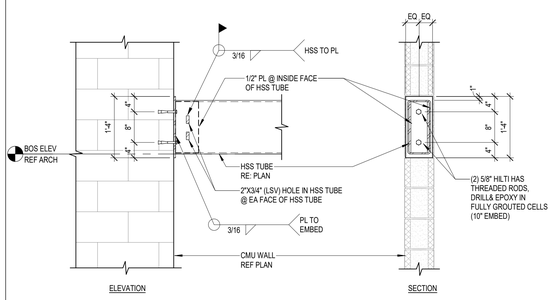

5 HSS TUBE BEARING AT END OF MASONRY WALL
3/4" = 1'-0"

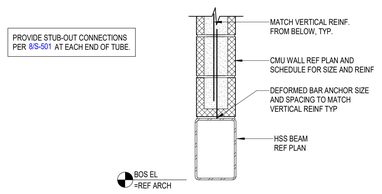

6 TYP LOW TUBE AT CMU SUPPORT
1" = 1'-0"

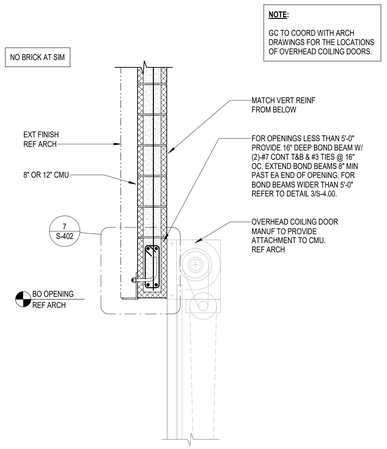

7 OVERHEAD COILING DOOR SECTION AT CMU
3/4" = 1'-0"

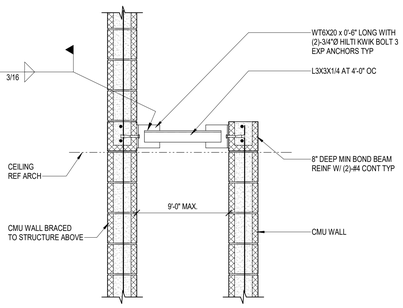

8 BRACE DETAIL AT DOUBLE WYTHE CMU WALLS
3/4" = 1'-0"

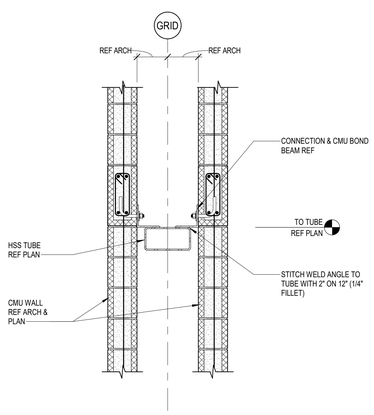

9 BRACE DETAIL AT DOUBLE WYTHE CMU WALLS
3/4" = 1'-0"

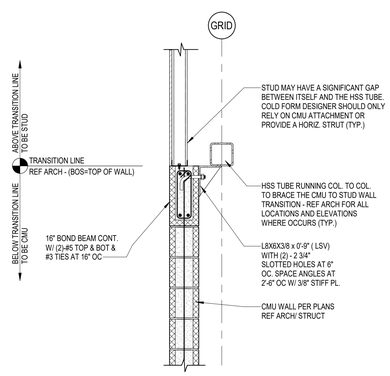

A - TYP. TUBE AT CMU TO STUD WALL TRANSITION IN PLANE W/ CENTERLINE OF COLUMN

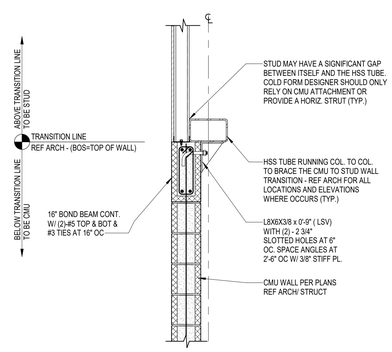

B - TYP. OFFSET TUBE AT CMU TO STUD WALL TRANSITION

10 TYPICAL CMU TO STUD TRANSITION
NO SCALE

Kubala ENGINEERS
Ph: (903)246-3074
www.kubalaengineers.com
TX. REG. NO. F-23612

PBK
www.pbk.com
TX FIRM: BR 1608
HOUSTON, TX
713-365-0608

PKG 3A GPHS - Fieldhouse

1000 Keene St.
Galena Park, TX 77547

CLIENT PROJECT NO: 240539

ISSUE FOR PROPOSAL

KEY PLAN
NORTH: PLAN TRUE

STATE OF TEXAS
JOHN R. KUBALA
106120
06/10/2025
Kubala Engineers
F-23612

CLIENT	
Galena Park ISD	
DATE 06/10/2025	PROJECT NUMBER 240539

DRAWING HISTORY

No.	Description	Date

CHECKED BY: SI
DRAWN BY: CML

MISC CMU DETAILS

S-403

Plot Stamp:
6/9/2025 5:32:31 PM

GENERAL STEEL NOTES AND TYP DETAILS
S-500
FOR BLUEBEAM LABELING/OCR:

0"
1"

STRUCTURAL STEEL:

MATERIAL:

1. STRUCTURAL STEEL IS TO CONFORM TO THE FOLLOWING ASTM SPECIFICATIONS, AND IS TO BE FABRICATED AND ERECTED IN ACCORDANCE WITH THE LATEST EDITION OF THE AISC SPECIFICATIONS:
   - A. STEEL WIDE FLANGE AND WT SECTIONS..... ASTM A992 OR ASTM A572 - GRADE 50
   - B. MISCELLANEOUS STEEL SECTIONS (ANGLES, CHANNELS AND BARS)..... ASTM A36
   - C. HOLLOW STEEL SECTIONS..... ASTM A500, GRADE B OR C, (46 KSI MIN)
   - D. STEEL PIPE SECTIONS..... ASTM A53, GRADE B
   - E. BOLTS AND NUTS (HEAVY-HEX)..... ASTM A325
   - F. SHEAR-STUD CONNECTORS..... ASTM A108
   - G. ANCHOR RODS..... ASTM F1554, GRADE 36, GRADE 55 OR GRADE 105
   - H. PLATES..... ASTM A36 OR A572 GRADE 50
   - K. WASHERS..... ASTM F436
2. ALL STEEL SHALL BE DOMESTICALLY (INCLUDING CANADA) MILLED AND FABRICATED. FOREIGN STEEL SHALL NOT BE UTILIZED WITHOUT PRIOR APPROVAL FROM THE STRUCTURAL ENGINEER. THE APPROVAL PROCESS SHALL TAKE PLACE DURING BIDDING TIME. ANY REQUEST TO UTILIZE FOREIGN STEEL MADE AFTER BIDDING SHALL BE REJECTED.
3. STRUCTURAL STEEL, MISCELLANEOUS METAL, AND EMBEDS EXPOSED TO THE EXTERIOR ARE TO BE HOT DIP GALVANIZED AFTER FABRICATION, EXCEPT AS NOTED ON THE DRAWINGS. TUBE SHAPE MEMBERS EXPOSED TO THE EXTERIOR SHALL HAVE CAP PLATES SEAL WELDED, UNLESS NOTED OTHERWISE ON THE DRAWINGS.
4. STRUCTURAL STEEL IS TO BE PREPARED AND PRIMED ACCORDING TO THE PROJECT SPECIFICATIONS. STRUCTURAL STEEL LOCATED IN CRAWL SPACES OR OTHERWISE INACCESSIBLE AREAS IS TO RECEIVE 2 COATS OF PRIMER.
5. CONTINUITY PLATES (FULL DEPTH COLUMN STIFFENERS ALIGNED WITH BEAM FLANGES, OR FULL DEPTH BEAM STIFFENERS ALIGNED WITH COLUMN FLANGES) SHALL MATCH THE STEEL GRADE OF THE BASE MEMBER.
6. IN ADDITION TO THE STEEL INDICATED ON THE DRAWINGS, THE CONTRACTOR SHALL INCLUDE THREE (3) PERCENT OF TOTAL TONNAGE OF FABRICATED STEEL (LABOR FOR ERECTION SHALL BE INCLUDED) DURING THE PROCESS OF WORK AS MAY BE DIRECTED BY THE ARCHITECT/ENGINEER OF RECORD. IF STEEL IS NOT USED DURING THE COURSE OF THE PROJECT, OWNER IS TO RECEIVE A CREDIT FOR THE PORTION NOT USED.

CONNECTIONS:

1. THE DESIGN OF THE STRUCTURAL STEEL CONNECTIONS, WHICH ARE NOT FULLY DETAILED IN THE CONTRACT DOCUMENTS, IS THE RESPONSIBILITY OF THE CONTRACTOR AND THE STEEL FABRICATOR. THE DESIGN OF THE CONNECTIONS SHALL BE PERFORMED BY A STRUCTURAL ENGINEER LICENSED TO PRACTICE IN THE STATE IN WHICH THE PROJECT IS LOCATED, WORKING FOR THE FABRICATOR, IN ACCORDANCE WITH THE LATEST ADOPTED EDITION OF THE AISC 303-CODE OF STANDARD PRACTICE FOR STEEL BUILDINGS AND BRIDGES.
2. THE FABRICATOR'S LICENSED STRUCTURAL ENGINEER IN RESPONSIBLE CHARGE OF THE CONNECTION DESIGN SHALL REVIEW AND CONFIRM IN WRITING THAT THE SHOP AND ERECTION DRAWINGS PROPERLY INCORPORATE THE CONNECTION DESIGNS PRIOR TO SUBMITTING THE CONNECTION CALCULATIONS AND SHOP DRAWINGS TO THE ENGINEER-OF-RECORD FOR REVIEW.
3. THE FABRICATOR SHALL PROVIDE A MEANS BY WHICH THE CONNECTION INFORMATION PREPARED BY THE FABRICATOR'S LICENSED PROFESSIONAL ENGINEER IN RESPONSIBLE CHARGE OF THE CONNECTION DESIGN IS REFERENCED TO THE RELATED CONNECTIONS ON THE SHOP AND ERECTION DRAWINGS FOR THE PURPOSE OF REVIEW.
4. THE FABRICATOR SHALL PROVIDE BEAM SHEAR CONNECTIONS USING THE VERTICAL REACTIONS PROVIDED ON THE PLANS, WHICH ARE PROVIDED AS KIPS (SERVICE-LOAD LEVEL). ALLOWABLE STRESS DESIGN (ASD) SHALL BE USED IN THE SELECTION, COMPLETION AND DESIGN OF CONNECTION DETAILS. **IN INSTANCES WHERE REACTIONS ARE NOT SPECIFIED ON THE PLANS, THE CONNECTION DESIGNER SHALL PROVIDE CONNECTIONS BASED ON THE WORST-CASE SHEAR REACTION (HIGHEST SHEAR CAPACITY) FROM THE OPTIONS LISTED BELOW:**
   - **4.1 OPTION 1 (BASED ON BEAMS' ALLOWABLE UNIFORM LOAD):** SHEAR CONNECTION CAPACITIES FOR BEAMS SHALL BE ONE-HALF (50 PERCENT) THE TOTAL ALLOWABLE UNIFORM LOAD GIVEN IN TABLE 3-6 THROUGH 3-9 OF THE AISC MANUAL OF STEEL CONSTRUCTION. CONNECTIONS FOR COMPOSITE BEAMS AND CAMBERED ROOF BEAMS SHALL HAVE THE STANDARD AISC CAPACITY INCREASED BY 35 PERCENT.
   - **4.2 OPTION 2 (MINIMUM SERVICE-LOAD / ASD) SHEAR REACTIONS:** ALL BEAM CONNECTIONS SHALL HAVE A MINIMUM SERVICE LOAD (ASD) SHEAR CAPACITY GIVEN IN TABLE 4.2. REFER TO TYPICAL DOUBLE-ANGLE CONNECTION SCHEDULE (1/S-503) AND TYPICAL SHEAR TAB BOLTED CONNECTION SCHEDULE (2/S-503) FOR SHEAR CONNECTIONS THAT MEET THE MINIMUM SERVICE-LOAD (ASD) SHEAR CONNECTION CAPACITIES LISTED IN TABLE 4.2. ALTERNATE CONNECTION DETAILS ARE ACCEPTABLE PROVIDED SIGNED AND SEALED SHOP DRAWINGS AND CALCULATIONS ARE SUBMITTED, AND ALL CONNECTION DESIGNS ARE PERFORMED UNDER THE DIRECT SUPERVISION OF A PROFESSIONAL ENGINEER REGISTERED IN THE STATE WHERE THE PROJECT IS LOCATED.

TABLE 4.2 - MINIMUM SERVICE-LOAD (ASD) SHEAR CONNECTION CAPACITIES

BEAM SIZE	MINIMUM REACTION (KIPS) (SERVICE-LOAD LEVEL)	BEAM SIZE	MINIMUM REACTION (KIPS) (SERVICE-LOAD LEVEL)
W8	9	W24	83
W10	14	W27	113
W12	23	W30	119
W14	28	W33	142
W16	40	W36	160
W18	48	W40	193
W21	64	W44	195

5. SHEAR CONNECTIONS MAY BE SELECTED FROM THE TABLES IN PART 10 OF THE LATEST EDITION OF THE AISC MANUAL OF STEEL CONSTRUCTION IF THE CONNECTION MEETS THE SHEAR CAPACITY REQUIREMENTS OF CONNECTION NOTE 4 ABOVE. TABLE 10-1 SHALL BE USED FOR BOLTED DOUBLE ANGLE CONNECTIONS, TABLE 10-2 SHALL BE USED FOR WELDED/BOLTED DOUBLE ANGLE CONNECTIONS, AND TABLE 10-3 SHALL BE USED FOR WELDED DOUBLE ANGLE CONNECTIONS.
6. DOUBLE CONNECTIONS AT COLUMNS AND/OR AT BEAM WEBS OVER A COLUMN. WHEN TWO STRUCTURAL MEMBERS ON OPPOSITE SIDES OF A COLUMN WEB, OR A BEAM WEB OVER A COLUMN, ARE CONNECTED SHARING COMMON CONNECTION HOLES, AT LEAST ONE BOLT WITH ITS WRENCH-TIGHT NUT SHALL REMAIN CONNECTED TO THE FIRST MEMBER UNLESS A SHOP-ATTACHED OR FIELD-ATTACHED SEAT OR EQUIVALENT CONNECTION DEVICE IS SUPPLIED WITH THE MEMBER TO SECURE THE FIRST MEMBER AND PREVENT THE COLUMN FROM BEING DISPLACED.
7. THE DRAWINGS INDICATE VARIOUS NON-PRIMARY STRUCTURAL FRAME ELEMENTS SUCH AS SHELF ANGLES, LINTELS, SUPPORT MEMBERS FOR CURTAIN WALLS OR MASONRY, AND EDGE ANGLES FOR OPENINGS AND PERIMETER CONDITIONS WHICH ARE INTENDED TO SUPPORT OR BE COORDINATED WITH MATERIALS FURNISHED BY OTHER TRADES. THE CONTRACTOR IS RESPONSIBLE FOR PROPER FIT-UP OF THE VARIOUS COMPONENTS OF THE FRAMING AND FOR MEETING THE TOLERANCES REQUIRED BY OTHER TRADES, WHICH MAY BE MORE STRINGENT THAN A.I.S.C. TOLERANCES FOR STRUCTURAL STEEL. WHERE THESE NON-PRIMARY STRUCTURAL FRAME ELEMENTS ARE INDICATED TO BE WELDED (INDICATED EITHER FIELD OR SHOP WELDED) IN THE DRAWINGS, THE CONTRACTOR SHALL HAVE THE FINAL RESPONSIBILITY FOR DETERMINING IF THE WELDS SHOULD BE MADE IN THE SHOP OR FIELD IN ORDER TO ACHIEVE PROPER FIT-UP OF THE VARIOUS COMPONENTS OF THE FRAMING AND FOR MEETING THE TOLERANCES REQUIRED BY OTHER TRADES.
8. SPLICING OF STRUCTURAL STEEL MEMBERS MUST BE APPROVED BY THE STRUCTURAL ENGINEER, IF NOT ALREADY SHOWN ON THE DRAWINGS.
9. SHOP BOLTED CONNECTIONS ARE PERMISSIBLE IF SUFFICIENT BOLT CLEARANCE IS AVAILABLE FOR TIGHTENING OF HIGH STRENGTH BOLTS. CLEARANCES SHALL BE IN ACCORDANCE WITH TABLE 7-16 AND 7-17 OF THE LATEST EDITION OF THE MANUAL OF STEEL CONSTRUCTION OF THE AISC. ALL STEEL MEMBERS AND ASSEMBLIES SHALL BE SHOP FABRICATED TO THE GREATEST EXTENT POSSIBLE. TRUSSES SHALL BE FULLY SHOP ASSEMBLED. FIELD SPLICES FOR SHIPPING PURPOSES SHALL ONLY BE AS APPROVED BY THE ENGINEER OF RECORD. THE STEEL FABRICATOR AND THE STEEL ERECTOR SHALL COORDINATE THE SHOP FABRICATION, SHIPPING AND ERECTION OF ALL STRUCTURAL MEMBERS AND ASSEMBLIES.
10. ALL CONNECTION BOLTS FOR STRUCTURAL STEEL MEMBERS MUST CONFORM TO ASTM A325-N HIGH-STRENGTH BOLTS UNLESS NOTED OTHERWISE. MINIMUM SIZE SHALL BE 3/4 INCH DIAMETER. STRUCTURAL STEEL CONNECTIONS SHALL BE DESIGNED BY THE CONTRACTOR IN ACCORDANCE WITH THE MINIMUM REQUIREMENTS SPECIFIED ON S-503. BOLTS SHALL BE DIRECT TENSION INDICATING BOLTS CONFORMING TO ASTM F1852 WITH HARDENED WASHERS UNDER THE NUT AND SACRIFICIAL SPLINES. HEX NUTS MUST CONFORM TO ASTM A563 AND WASHERS MUST CONFORM TO ASTM F436.
11. ALL MOMENT CONNECTIONS SHALL BE FULL WELDED CONNECTIONS DESIGNED TO DEVELOP THE FULL CROSS-SECTION OF THE MEMBER. STIFFENER PLATES, WHERE SHOWN, ARE MANDATORY AND MAY NOT BE OMITTED. MOMENT CONNECTIONS ARE INDICATED ON THE PLANS BY A TRIANGULAR BULB ON THE END OF THE BEAM, OR BY THE LETTERS "MC". CANTILEVER BEAMS MOMENT CONNECTED TO THE FRAME SHALL BE THE SAME SIZE AS THE BACK-UP SPAN IF NO SIZE IS GIVEN.
12. WHERE HORIZONTAL FORCES ARE INDICATED ON PLAN AS "H= _K", THE LICENSED PROFESSIONAL ENGINEER WORKING FOR THE FABRICATOR SHALL SIZE THE CONNECTION TO TRANSFER THE HORIZONTAL FORCE IN ADDITION TO THE REQUIRED VERTICAL REACTION. SLOTTED HOLES ARE NOT PERMITTED AT CONNECTIONS WITH HORIZONTAL FORCES.
13. EMBED PLATES TO BE INSTALLED IN THE FOUNDATION AND/OR SLAB SHALL BE SUBMITTED FOR REVIEW WITH THE ANCHOR BOLTS.
14. BOLTS SHALL BE TIGHTENED BY THE AISC "SNUG TIGHT" METHOD UNLESS NOTED OTHERWISE.
15. CANTILEVER BEAMS MOMENT CONNECTED TO THE FRAME SHALL BE THE SAME SIZE AS THE BACK-UP SPAN IF NO SIZE IS GIVEN.
16. SHELF ANGLES SHOWN AS CONTINUOUS IN THE SECTIONS SHALL BE INSTALLED IN 20'-0" MAXIMUM LENGTHS, LEAVING A 1/4" GAP BETWEEN ENDS AND AT CORNERS. LOCATE GAPS TO MATCH MASONRY CONTROL JOINTS. AT BUILDING EXPANSION JOINT, LEAVE A GAP TO MATCH EXPANSION JOINT WIDTH.
17. CONNECT MISCELLANEOUS STEEL MEMBERS USING FILLET WELDS SUFFICIENT TO DEVELOP THE TENSILE STRENGTH OF THE SMALLER MEMBER AT THE JOINT UNLESS SHOWN OTHERWISE.
18. STEEL MEMBERS SHOWN TO BE CURVED SHALL BE ROLLED IN A MANNER THAT WILL NOT CAUSE DISTORTION OR BUCKLING. SHOULD ALTERATIONS TO THE MEMBER SIZE, SUCH AS A THICKER FLANGE OR WEB, BE REQUIRED TO ENSURE THIS OUTCOME, THE ADDITIONAL STEEL SHALL BE PROVIDED AT NO ADDITIONAL COST TO THE CONTRACT.
19. WHERE STIFFENER PLATES ARE INDICATED ON DRAWINGS, THEY ARE REQUIRED AND SHALL BE PROVIDED AS INDICATED.
20. PROVIDE WELDED IN SPACER PLATES AT THREE FEET ON CENTER AT ALL BACK-TO-BACK CHANNELS OR DOUBLE ANGLES.
21. BEAMS WITH LATERAL BRACING ATTACHED AND WEB CONNECTIONS OF MOMENT-CONNECTED BEAMS SHALL UTILIZE SLIP CRITICAL BOLTS OR WELDED CONNECTIONS.
22. ARCHITECTURALLY EXPOSED STRUCTURAL STEEL (AESS), IF NOTED ON STRUCTURAL PLANS OR BY THE ARCHITECT, SHALL CONFORM TO AISC 303 SECTION 10.
23. INSTALL LEDGER ANGLES FOR FASCIA BRICK SUPPORT SUCH THAT THE SWEEP OR CAMBER DOES NOT EXCEED 1/8 INCH DEVIATION FROM STRAIGHT LINE.
24. TEMPORARY SUPPORTS, BRACES, FALSE WORK, SHORES, CRIBBING OR OTHER SUPPORTS REQUIRED DURING ERECTION TO KEEP STRUCTURAL STEEL SECURE, SUPPORTED, PLUMB, AND IN ALIGNMENT SHALL BE DESIGNED, FURNISHED AND INSTALLED BY THE CONTRACTOR AND STEEL ERECTOR. THESE TEMPORARY SUPPORTS SHALL SECURE THE STRUCTURAL STEEL FRAMING, OR ANY PARTLY ASSEMBLED STEEL FRAMING, AGAINST ALL LATERAL AND VERTICAL LOADS, INCLUDING BUT NOT LIMITED TO THOSE RESULTING FROM WIND, SEISMIC, ERECTION OPERATIONS AND THE WEIGHT OF THE STRUCTURE AND SUPPORTED ELEMENTS. ALL TEMPORARY SUPPORTS SHALL REMAIN IN PLACE DURING CONSTRUCTION UNTIL THE PERMANENT STRUCTURAL STEEL, CONNECTIONS, FLOOR DECKS AND BRACING ELEMENTS INDICATED IN THE CONTRACT DOCUMENTS ARE COMPLETE.

WELDING:

1. ALL WELDING MUST CONFORM TO THE AMERICAN WELDING SOCIETY ANSI/AWS D1.1 STANDARDS, AND SHALL CONFORM TO THE STANDARDS OF THE LATEST EDITION OF THE MANUAL OF STEEL CONSTRUCTION. ALL WELDERS MUST BE CERTIFIED IN ACCORDANCE WITH AWS D1.1. WELDING OF REINFORCING BARS SHALL COMPLY TO THE AMERICAN WELDING SOCIETY AWS D1.4. SHORT CIRCUIT TRANSFER FOR THE GAS METAL ARC WELDING PROCESS IS NOT PERMITTED.
2. ELECTRODES FOR ALL FIELD AND SHOP WELDING SHALL BE CLASS E70XX. ELECTRODES FOR MOMENT CONNECTIONS SHALL BE CLASS E7018 WITH A CHARPY TOUGHNESS OF AT LEAST 20 FT-LBS AT -20 DEGREES FAHRENHEIT.
3. ALL MISCELLANEOUS WELDS SHALL BE MINIMUM SIZE FILLET ALL AROUND AND MUST BE IN ACCORDANCE WITH AISC. WELDING OF CONTINUOUS MEMBERS SHALL BE A MINIMUM OF 2 INCHES OF 3/16 INCH FILLET STITCH WELDS AT 12 INCHES O.C., STAGGERED EACH SIDE, UNLESS SHOWN OTHERWISE ON THE DRAWINGS. COLUMN BASE PLATES, STIFFENER PLATES AND CAP PLATES SHALL BE WELDED ALL AROUND.
4. HEADED STUDS SHALL BE WELDED TO EMBED PLATES BY A METHOD IN WHICH THE CONNECTION CAN DEVELOP THE FULL TENSION AND SHEAR CAPACITY OF THE STUD.

BASE PLATE NOTES:

1. ALL ANCHOR RODS SHALL BE F1554 GRADE 55 UNLESS NOTED OTHERWISE.
2. SIZE WELDS PER AISC MINIMUM FILLET REQUIREMENTS, 5/16" MINIMUM.
3. UNLESS NOTED OTHERWISE, ALL ANCHOR ROD NUTS SHALL BE TIGHTENED TO A "SNUG TIGHT" CONDITION AS DEFINED BY AISC AFTER THE CONCRETE IS AT LEAST 14 DAYS OLD.
4. USE OVERSIZED HOLES FOR ANCHOR RODS ACCORDING TO AMERICAN INSTITUTE OF STEEL CONSTRUCTION. PLATE WASHERS WITH STANDARD HOLES SHALL BE INSTALLED OVER OVERSIZED HOLES.
5. CONTRACTOR SHALL PROVIDE TEMPLATE FOR ANCHOR ROD INSTALLATION.
6. NON-SHRINK GROUT FOR BASE PLATES AND BEARING PLATES:

   ALL GROUT USED UNDER STEEL COLUMN BASE PLATES OR BEARING PLATES SHALL BE A NON-METALLIC, SHRINKAGE RESISTANT COMPOUND CONFORMING TO ASTM C1090 AND THE CORPS OF ENGINEERS SPECIFICATION CRD-C-621. THE GROUT SHALL HAVE A MINIMUM STRENGTH OF 6,000 PSI WHEN BEARING ON 3,000 PSI CONCRETE OR LESS, A STRENGTH OF 8,000 PSI WHEN BEARING ON CONCRETE BETWEEN 3,000 AND 4,000 PSI, AND, UNLESS NOTED OTHERWISE ON THE DRAWINGS, A STRENGTH OF 8,000 PSI WHEN BEARING ON CONCRETE GREATER THAN 4,000 PSI. 100 PERCENT OF VOID UNDER ALL BASE PLATES IS TO BE GROUTED. ALL BASE PLATES WITH A DIMENSION GREATER THAN 24" SHALL HAVE TWO 1" DIAMETER GROUT HOLES. IF THE SPACE UNDER A COLUMN BASE PLATE IS LESS THAN 1/4", A PRESSURE INJECTION SYSTEM SHALL BE USED.

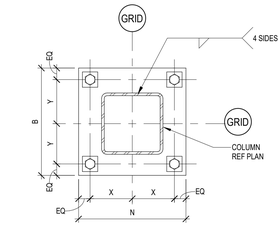

TYPE 1 HSS BASE PLATE
NTS

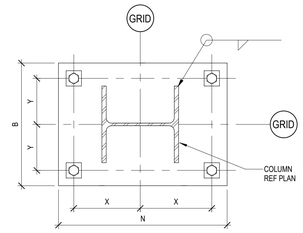

TYPE 2 WIDE FLANGE BASE PLATE
NTS

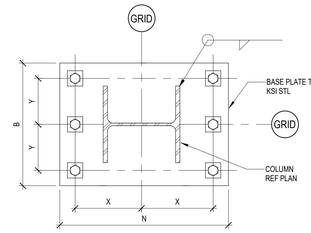

TYPE 3 WIDE FLANGE MOMENT BASE PLATE
NTS

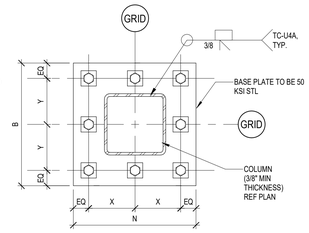

TYPE 4 MOMENT BASE PLATE
NTS

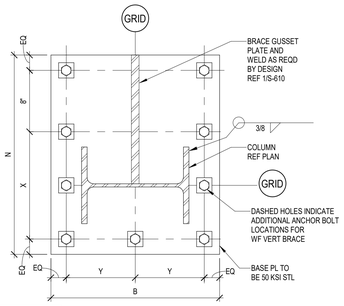

TYPE 5 BRACE BASE PLATE
NTS

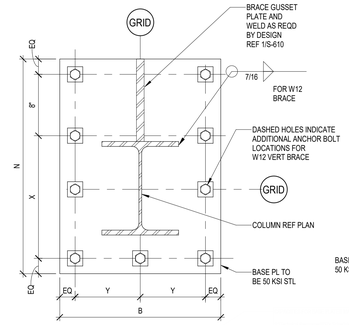

TYPE 6 BRACE BASE PLATE
NTS

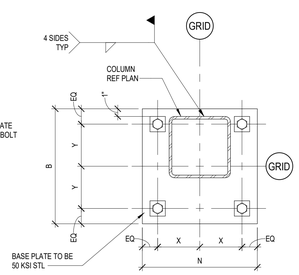

TYPE 7 HSS BASE PLATE
NTS

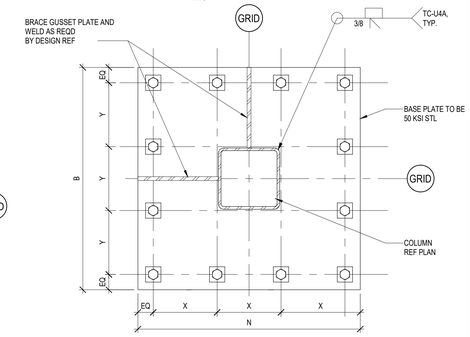

TYPE 8 VERTICAL BRACE BASE PLATE
NTS

NOTES:

1. USE OVERSIZED HOLES FOR ANCHOR RODS ACCORDING TO AMERICAN INSTITUTE OF STEEL CONSTRUCTION.
2. PLATE WASHERS WITH STANDARD HOLES SHALL BE INSTALLED OVER OVERSIZED HOLES.
3. CONTRACTOR SHALL PROVIDE TEMPLATE FOR ANCHOR ROD INSTALLATION.
4. MINIMUM GROUT THICKNESS PER GROUT THICKNESS SCHEDULE.
5. SIZE WELDS PER AISC MINIMUM FILLET REQUIREMENTS, 5/16" MINIMUM.

BASE PLATE SCHEDULE

MARK	COLUMN SIZE	BASE PLATE TYPE	BASE PLATE DIMENSIONS					ANCHOR RODS				NOTES
			N LENGTH (IN)	B WIDTH (IN)	T THICKNESS (IN)	X (IN)	Y (IN)	NUMBER	DIA (IN)	EMBED LENGTH (IN)	ANCHOR ROD GRADE	
-	HSS4X4 STAIR COLUMN	1	10	10	1	3 1/2	3 1/2	4	3/4	18	36	-
-	HSS5X5	1	11	11	1	4	4	4	3/4	18	36	-
-	HSS6X6	1	12	12	1	4 1/2	4 1/2	4	3/4	18	36	-
-	HSS8X8	1	16	16	1 1/4	6	6	4	1	18	36	-
-	HSS10X10	1	19	19	1 1/2	7	7	4	1 1/4	18	36	-
-	HSS12X12	1	21	21	1 1/2	8	8	4	1 1/2	18	36	-
-	HSS14X14	1	24	24	1 1/2	9 1/2	9 1/2	4	1 1/2	18	36	-
-	HSS8X8 BRACE	5 OR 6	28	20	2	15	7 1/2	7	1 1/2	18	105	7/16 MIN COLUMN WELD TO BASE
-	HSS10X10 BRACE	5 OR 6	30	22	2	16	8	7	1 1/2	18	105	-
-	HSS12X12 BRACE	5 OR 6	32	24	2	18	9	7	1 1/2	18	105	MIN 4'-0" x 4'-6" CONCRETE PEDESTAL - REF S-600
-	HSS8X8 BRACE 2-DIRECTIONS	8	26	26	2	7	7	12	1 1/2	18	105	
-	HSS10X10 BRACE 2-DIRECTIONS	8	29	29	2	8	8	12	1 1/2	18	105	
	HSS8X8 FIXED BP	4	19	19	1 1/2	7	7	8	1 3/4	18	105	
-	HSS10X10 FIXED BP	4	21	21	1 3/4	8	8	8	1 1/2	24	105	-
-	HSS12X12 FIXED BP	4	23	23	1 3/4	9	9	8	1 3/4	24	105	MIN 3'-0" x 3'-0" CONCRETE PEDESTAL
-	W10X33-W10X39	2	18	15	1	7	5 1/2	4	1	18	36	-
-	W10X45-W10X54	2	18	16	1 1/4	7	6	4	1	18	36	-
-	W10X68	2	19	16	1 3/4	7 1/2	6	4	1	18	36	-
-	W10X77-W10X88	2	19	16	1 3/4	7 1/2	6	4	1	18	36	BASE PLATE TO BE 50 KSI STEEL
-	W12X96-W12X120	2	21	18	1 3/4	8 1/2	7	4	1 1/4	18	36	BASE PLATE TO BE 50 KSI STEEL
-	W14X99	2	26	24	2	10 1/2	9 1/2	4	1 1/2	18	36	BASE PLATE TO BE 50 KSI STEEL
-	W10 BRACE	5 OR 6	32	24	2	18	9	9	1 1/2	18	105	-
-	W12 BRACE	5 OR 6	32	24	2 1/2	18	9	9	1 1/2	18	105	MIN 4'-0" x 4'-6" CONCRETE PEDESTAL - REF S-600
-	W10 BRACE 2-DIRECTIONS	8	32	32	2 1/2	18	18	11	1 1/2	18	105	-
-	W12 BRACE 2-DIRECTIONS	8										
-	W10 FIXED BP	3										
-	W12 FIXED BP	3										
-	W14 FIXED BP	3										

1 COLUMN BASE PLATE AND ANCHOR ROD SCHEDULE
NO SCALE

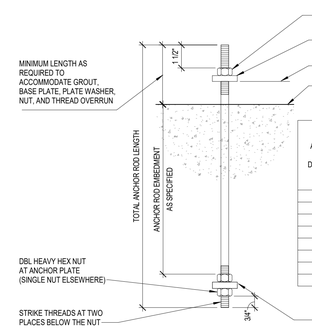

ANCHOR ROD DIAMETER	BASE PLATE HOLE DIAMETER (IN)	CIRCULAR OR SQUARE PLATE WASHER SIZE (IN)	PLATE WASHER THICKNESS (IN)
3/4"	1 5/16	2	1/4
7/8"	1 9/16	2 1/2	5/16
1"	1 13/16	3	3/8
1 1/4"	2 1/16	3	1/2
1 1/2"	2 5/16	3 1/2	1/2
1 3/4"	2 3/4	4	5/8
2"	3 1/4	5	3/4
2 1/2"	3 3/4	5 1/2	7/8

GROUT THICKNESS SCHEDULE

ANCHOR BOLT SIZE (DIA.)	MINIMUM GROUT THICKNESS
LESS THAN OR EQUAL TO 1 1/4"Ø	2"
GREATER THAN 1 1/4"Ø	3"

NOTES:

1. REFER TO SPECIFICATIONS AND GENERAL NOTES FOR GROUT REQUIREMENTS.
2. GROUT MAY BE BEVELED OR FORMED BUT SHALL EXTEND A MIN OF 1 1/2" BEYOND FACE OF BASE PLATE.

Kubala ENGINEERS
Ph: (800)246-3674
www.kubalaengineers.com
TX: REG. NO. F-23612

PBK
www.pbk.com
TX FIRM: BR 1608
HOUSTON, TX 713-965-0608

PKG 3A GPHS - Fieldhouse

1000 Keene St.
Galena Park, TX 77547

CLIENT PROJECT NO: 240539

ISSUE FOR PROPOSAL

KEY PLAN
NORTH: PLAN TRUE

STATE OF TEXAS
JOHN R. KUBALA
106120
06/10/2025
Kubala Engineers
F-23612

CLIENT	
Galena Park ISD	
DATE 06/10/2025	PROJECT NUMBER 240539

DRAWING HISTORY

No.	Description	Date

CHECKED BY: SI
DRAWN BY: CML

GENERAL STEEL NOTES AND TYP DETAILS

S-500

Plot Stamp:
6/9/2025 5:32:31 PM

GENERAL STEEL NOTES AND TYP DETAILS
S-501
FOR BLUEBEAM LABELING/OCR:

0"
1"

GENERAL INFO.:

1. FOR ANY STEEL BEAM OR COLUMN THAT DOES NOT MEET THE MINIMUM SIZE REQUIRED,DUE TO THE U.L. DESIGN NUMBER (SELECTED BY THE ARCHITECT), THE THICKNESS OF THE SPRAYED FIRE PROTECTION MATERIAL MUST BE INCREASED AS REQUIRED BY THE FORMULA SHOWN IN THE U.L. FIRE RESISTANCE DIRECTORY (LATEST EDITION).

2. AT BRICK SUPPORT ANGLES, DURING CONSTRUCTION, THE BRICK SHALL BE INSTALLED WITHOUT SHORING THE SUPPORT ANGLE. SHORING THE BRICK DURING CONSTRUCTION CAN CAUSE HORIZONTAL BED JOINT CRACKING WHEN THE SHORES ARE REMOVED.

3. HEADED ANCHORS/STUDS SHALL BE MANUFACTURED FROM COLD DRAWN MATERIALS PER ASTM A108. ANCHORS/STUDS SHALL BE OF GRADE 50 WITH SOLID FLUX FILLED HEADS. ANCHORS/STUDS STUDS SHALL BE AUTOMATICALLY END WELDED WITH IN ACCORDANCE WITH AWS D1.1. ANCHORS/STUDS FOR EMBEDDED PLATES AND OTHER ANCHORS SHALL BE SHOP WELDED. STUDS FOR COMPOSITE BEAMS MUST BE FIELD WELDED.

4. AT BUILDINGS, WHERE SPLICED COLUMNS ARE REQUIRED, THE STEEL COLUMNS MUST BE SPLICED AT A MINIMUM OF 4'-0" ABOVE THE FINISH FLOOR. COLUMNS SHALL BE SPLICED AT EVERY OTHER LEVEL. AT WIDE FLANGE COLUMNS, PROVIDE HOLES IN THE WEBS FOR 3/4" DIAMETER SAFETY CABLES. AT TUBE OR PIPE COLUMNS, PROVIDE PLATES WITH HOLES WELDED TO THE COLUMNS FOR SAFETY CABLE CONNECTIONS. A L3x3x1/4 DECK SUPPORT ANGLE SHALL BE PROVIDED ON ALL SIDES OF THE COLUMN.

5. ALL STRUCTURAL STEEL OUTSIDE OF THE BUILDING ENVELOPE SHALL BE HOT DIPPED GALVANIZED. WITH A MINIMUM ZINC COATING CLASS OF G90, MEETING THE REQUIREMENTS OF ASTM 123, AND SHALL BE APPLIED AFTER FABRICATION. ALL FIELD WELDS SHALL REQUIRED SHALL BE GROUND SMOOTH AND TOUCHED UP WITH A ZINC RICH PAINT.

6. THE GENERAL CONTRACTOR AND HIS SUBCONTRACTORS SHALL COMPLY TO OSHA 29 CFR 1926 SUBPART R, SAFETY STANDARDS FOR STEEL ERECTION.

7. THE DRAWINGS AND SPECIFICATIONS MAY NOT INDICATE OR DESCRIBE ALL OF THE WORK REQUIRED FOR THE PERFORMANCE AND COMPLETION OF THE PROJECT. THE CONTRACTOR SHALL BE RESPONSIBLE FOR THE FABRICATION AND INSTALLATION OF ALL MISCELLANEOUS METAL ITEMS INDICATED, DESCRIBED, OR IMPLIED ON THE STRUCTURAL AND/OR THE ARCHITECTURAL DRAWINGS. MISCELLANEOUS STEEL ITEMS, WITHIN AN ASSEMBLY AND NOT ATTACHED TO THE STRUCTURE, ARE THE RESPONSIBILITY OF THE GENERAL CONTRACTOR AND HIS SUBCONTRACTORS, WHETHER OR NOT THEY ARE SHOWN ON THE ARCHITECTURAL OR STRUCTURAL DRAWINGS. SUCH ASSEMBLIES INCLUDE, BUT ARE NOT LIMITED TO, EXTERIOR AND INTERIOR WALL ASSEMBLIES, CEILING ASSEMBLIES, PARTITION ASSEMBLIES, SHELF AND CABINET ASSEMBLIES AND ALL OTHER SIMILAR ASSEMBLIES. ANY MISCELLANEOUS METAL ITEMS INDICATED ON THE ARCHITECTURAL DRAWINGS AND NOT SHOWN ON STRUCTURAL DRAWINGS SHALL BE A MINIMUM OF L4x4x1/2", CFx9.8, 3/8" PLATE OR HSS4x4x3/8" UNLESS OTHERWISE APPROVED BY THE STRUCTURAL ENGINEER.

8. THE GENERAL CONTRACTOR AND THE ELEVATOR SUPPLIER SHALL REVIEW THE STRUCTURAL DRAWINGS FOR FLOOR TO FLOOR AND FLOOR TO ROOF HEIGHTS FOR THE REQUIRED DISTANCE BETWEEN BRACE POINTS, FOR THEIR RAIL DESIGN. PROVIDE A W18x50 MINIMUM HOIST BEAM SIZE, IF NO OTHER SIZE IS PROVIDED ON THE PLANS. BRACING REQUIREMENTS FOR THE TOP OF THE RAIL, OR INTERMEDIATE RAIL BRACE POINTS, SHALL BE COORDINATED WITH THE STRUCTURAL DRAWINGS. IF BRACING IS REQUIRED BUT NOT SHOWN, PROVIDE A MINIMUM OF TS6x6X1/4 VERTICAL POST OR HANGER ATTACHED TO THE STRUCTURE WITH W8x12 BEAMS OR C7x9.8 CHANNELS SPANNING BETWEEN THE FRAMING MEMBERS. ALL MISCELLANEOUS STEEL MEMBERS REQUIRED TO ATTACH RAILS AT THE RAIL BRACE POINTS SHALL BE SUPPLIED BY THE ELEVATOR SUPPLIER. ELEVATOR MACHINE BEAM OR SHIVE BEAM LOADS SHALL BE COORDINATED WITH THE STRUCTURAL DRAWINGS. LOADS AND LOAD LOCATIONS VARYING FROM THE LOADS SHOWN ON THE STRUCTURAL DRAWINGS SHALL BE VERIFIED WITH THE STRUCTURAL ENGINEER OF RECORD. THE FRAMING AND INFORMATION SHOWN ON THE STRUCTURAL DRAWINGS IS BASED ON:

- ELEVATOR MODEL NO. PER SPEC.
- MANUFACTURED BY PER SPEC.

IF THE ELEVATOR MANUFACTURER AND/OR MODEL NUMBER CHANGES, THE GENERAL CONTRACTOR IS RESPONSIBLE FOR COORDINATING ALL REVISIONS TO THE FOUNDATIONS AND THE FLOOR AND ROOF FRAMING AS REQUIRED DUE TO THE CHANGE IN THE ELEVATOR TYPE.

IMPORTANT NOTE TO PROPOSERS:

1. THESE DRAWINGS AND SPECIFICATIONS DO NOT NECESSARILY INDICATE ALL OF THE WORK REQUIRED FOR THE COMPLETION OF THE PROJECT. THESE DRAWINGS DO NOT NECESSARILY INDICATE ALL SECONDARY FRAMING WHICH MAY BE REQUIRED BASED ON THE ARCHITECTURAL DRAWINGS.

2. WHERE MISCELLANEOUS METAL ITEMS ARE IMPLIED OR INDICATED ON THE STRUCTURAL OR ARCHITECTURAL DRAWINGS, THE CONTRACTOR SHALL BE RESPONSIBLE FOR THE FABRICATION AND INSTALLATION OF THESE ITEMS. THIS INCLUDES ANY MISCELLANEOUS METAL ITEMS INDICATED ON THE ARCHITECTURAL DRAWINGS AND NOT SHOWN ON THE STRUCTURAL DRAWINGS AND ANY ITEMS SHOWN ON THE STRUCTURAL DRAWINGS AND NOT NOTED. PROPOSERS SHALL ASSUME FOR PROPOSAL PURPOSES ONLY THE SIZE OF THESE ITEMS ARE AS FOLLOWS:

A. ANGLES: L6X6X3/8
B. CHANNELS: C12X20.7
C. PLATES: 1/2" THICK
D. ANCHOR RODS: 1 1/2" DIAMETER X 18"LONG
E. EPOXY ANCHORS: 3/4" DIAMETER AT 48"OC MAX SPACING
F. WIDE FLANGE BEAMS: W24X55
G. WIDE FLANGE COLUMNS: W12X79
H. HSS COLUMNS AND BEAMS: HSS8X8X1/2
J. HSS BEAMS: HSS18X6X5/8
K. VERT BRACE: HSS8X8X3/8

THE CONTRACTOR SHALL SUBMIT AN RFI AND THE ENGINEER SHALL APPROVE THE SIZE OF THE MEMBER BEFORE CONSTRUCTION OR FABRICATION.

3. PROVIDE SUPPORT FOR EDGES OF ROOF AND FLOOR DECK WHETHER SHOWN ON THE DRAWINGS OR NOT. PROVIDE CONTINUOUS SCREED ANGLE OR BENT PLATE FOR SLAB EDGES.

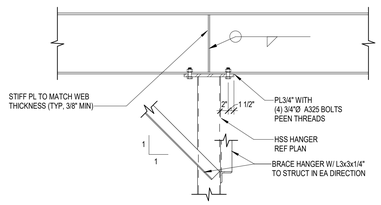

1 TYPICAL HANGER DETAIL
NO SCALE

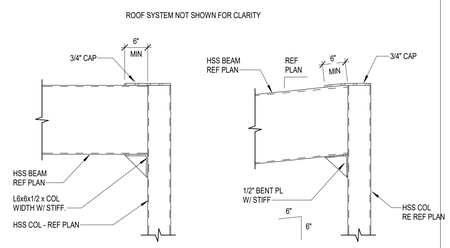

2 TYPICAL OUTRIGGER DETAIL
NO SCALE

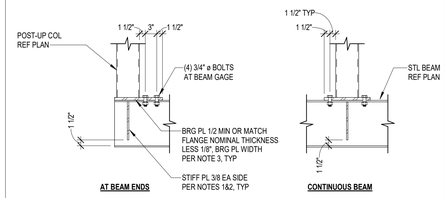

POST UP

NOTES:

1. CHAMFER CORNERS OF STIFF PL ATE AS REQUIRED AT BEAM "K" REGION.

2. AT INTERSECTING BEAMS, EXTEND SHEAR TAB PER TYPICAL CONNECTION DETAIL FULL DEPTH.

3. BEARING PLATE WIDTH = BEAM FLANGE WIDTH. IF COLUMN IS WIDER THAN BEAM FLANGE, BEARING PLATE WIDTH = COLUMN WIDTH + 1".

3 TYPICAL POST-UP DETAIL
NO SCALE

NOTES:

1. REF ROOF PLAN FOR ROOF SLOPE. SLOPE CAP PLATES ACCORDINGLY.

2. STIFFENER PLATE SHALL BE EQUAL IN THICKNESS TO THE COLUMN WALL THICKNESS OR BEAM WEB THICKNESS, WHICHEVER IS GREATER.

3. CONNECT INTERSECTING BEAMS TO STIFFENER PLATES USING BOLTS IN SINGLE SHEAR DESIGNED FOR ECCENTRIC BEAM REACTION.

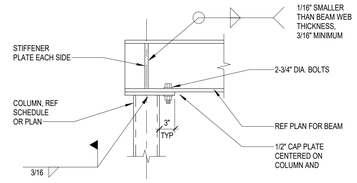

4 TYPICAL CAP PLATE - BOLTED CONNECTION DETAIL
NO SCALE

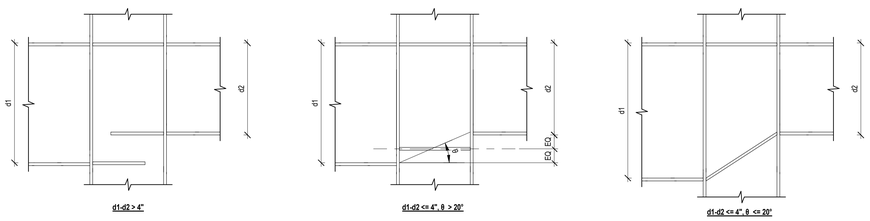

NOTES:
1. REFER TO SPECIFICATIONS FOR CONNECTION DESIGN CRITERIA.

2. PROVIDE PREDESIGNED CONNECTIONS AS SHOWN IN AMERICAN INSTITUTE OF STEEL CONSTRUCTION MANUAL WHERE APPLICABLE.

3. WHEN BEAM FRAMES ON ONLY ONE SIDE OF COLUMN OR WHEN BEAM REACTIONS ARE SIGNIFICANTLY DIFFERENT, STIFFEN COLUMN WEB AS REQUIRED.

5 TYPICAL COLUMN STIFFENER ARRANGEMENT FOR OPPOSING BEAMS OF DIFFERENT DEPTHS
1 1/2" = 1'-0"

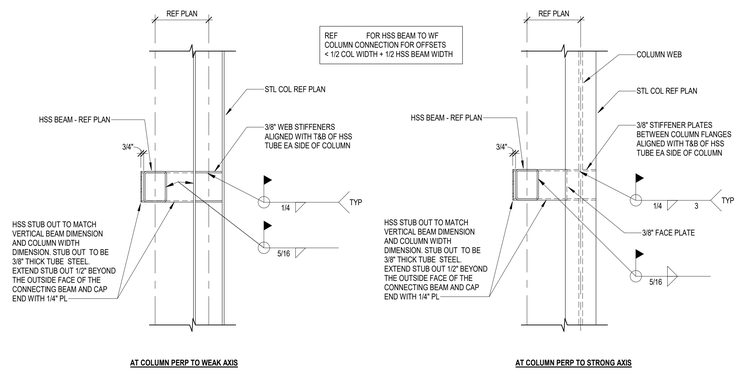

7 TYPICAL HSS BEAM TO WF COLUMN CONNECTION FOR OFFSETS > 1/2 COL WIDTH + 1/2 HSS BEAM WIDTH
NO SCALE

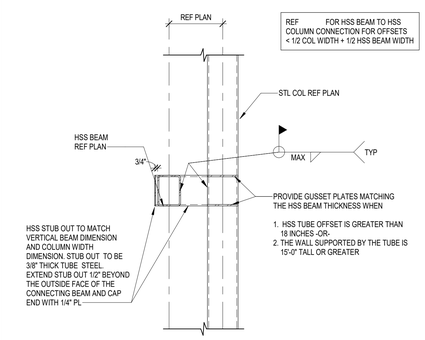

8 TYPICAL HSS BEAM TO HSS COLUMN CONNECTION FOR OFFSETS > 1/2 COL WIDTH + 1/2 HSS BEAM WIDTH
3/4" = 1'-0"

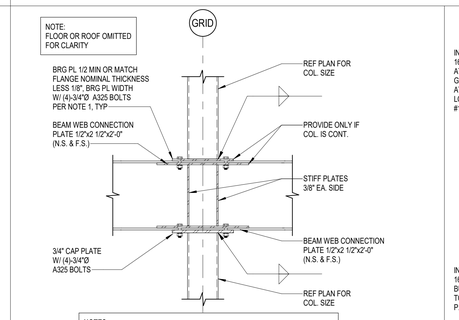

NOTES:

1. BEARING PLATE WIDTH = BEAM FLANGE WIDTH. IF COLUMN IS WIDER THAN BEAM FLANGE, BEARING PLATE WIDTH = COLUMN WIDTH + 1".

2. REF 3/S-501 AND 4/S-501 FOR INFO NOT SHOWN HERE

9 TYPICAL CANTILEVERED BEAM OVER COLUMN CONNECTION
3/4" = 1'-0"

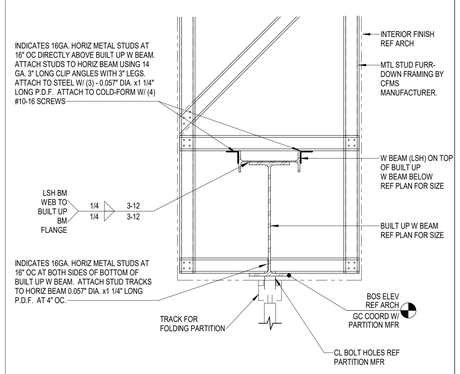

10 FOLDING PARTITION SUPPORT
NO SCALE

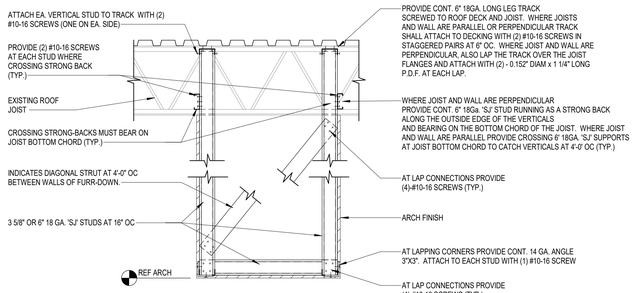

11 FUR-DOWN DETAIL
3/4" = 1'-0"

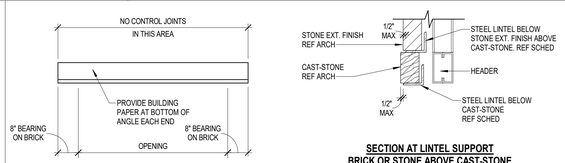

SECTION AT LINTEL SUPPORT BRICK OR STONE ABOVE CAST-STONE

CLEAR OPENING	MINIMUM ANGLE SIZE
0 TO LESS THAN 6'-0"	L 3 1/2 x 3 1/2 x 5/16 (GALV)
6'-0" TO LESS THAN 7'-0"	L 5 x 3 1/2 x 5/16 (LLV) (GALV)
7'-0" TO LESS THAN 8'-0"	L 6 x 3 1/2 x 5/16 (LLV) (GALV)

NOTES:

1. REF ARCHITECTURAL DRAWINGS FOR SIZE AND LOCATIONS OF OPENINGS.

2. PROVIDE 1" OF BEARING @ EACH JAMB FOR EACH FOOT OF CLEARSPAN BUT NOT LESS THAN 8".

3. WHERE MIN. BEARING CANNOT BE ACHIEVED, PROVIDE ADEQUATE CONNECTION TO STRUCTURAL MEMBERS OR PROVIDE VERTICAL SUPPORTS AS REQ'D. SUCH DETAILS SHALL BE APPROVED BY THE ENGINEER OF RECORD.

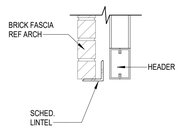

SECTION AT LINTEL

12 TYPICAL STEEL LOOSE LINTEL SCHEDULE
NO SCALE

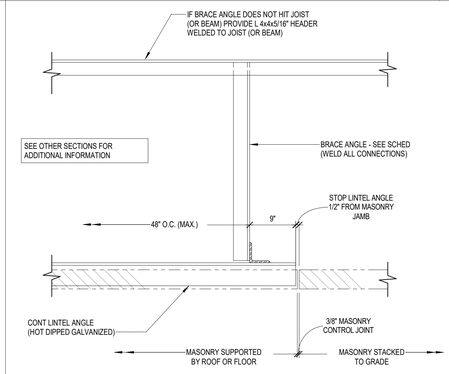

PLAN VIEW

13 HANGER BRACE SCHEDULE
NO SCALE

NOTE:

1. WHERE MASONRY IS SUPPORTED BY STEEL TUBES WITHOUT HANGERS AND BRACES, THE NOTES PERTAINING TO LINTEL ANGLES SHALL STILL APPLY.

BRACE ANGLE SCHEDULE

BRACE ANGLE SIZE	HEADER ANGLE SIZE	MAX LENGTH
L 3x3x1/4"	L 4x4x5/16"	9'-6"
L 4x4x1/4"	L 5x5x5/16"	13'-3"
L 5x5x5/16"	L 6x6x3/8"	16'-6"
L 6X6x5/16"	L 6x6x3/8"	20'-0"
CONSULT ENGINEER	CONSULT ENGINEER	OVER 20'-0"

SIZE OF ALL BRACE ANGLES IN COMPRESSION SHALL BE DETERMINED BY STEEL FABRICATOR BASED ON THEIR UNBRACED LENGTHS AS SCHEDULED

Kubala ENGINEERS
Ph: (800)245-3674
www.kubalaengineers.com
TX. REG. NO. F-23612

PBK
www.pbk.com
TX FIRM: BR 1608
HOUSTON, TX
713-965-0608

PKG 3A GPHS - Fieldhouse

1000 Keene St.
Galena Park, TX 77547

CLIENT PROJECT NO: 240539

ISSUE FOR PROPOSAL

KEY PLAN
NORTH: PLAN TRUE

STATE OF TEXAS
JOHN R. KUBALA
106120
06/10/2025
Kubala Engineers
F-23612

CLIENT	
Galena Park ISD	
DATE 06/10/2025	PROJECT NUMBER 240539

DRAWING HISTORY

No.	Description	Date

CHECKED BY: SI
DRAWN BY: CML

GENERAL STEEL NOTES AND TYP DETAILS

S-501

Plot Stamp:
6/9/2025 5:32:32 PM

GENERAL STEEL NOTES AND TYP DETAILS
S-502
FOR BLUEBEAM LABELING/OCR:

0"
1"

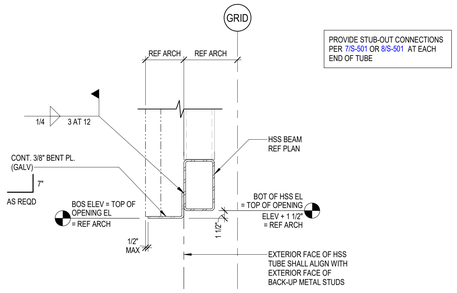

1 TYP LOW TUBE AT BRICK SUPPORT
1" = 1'-0"

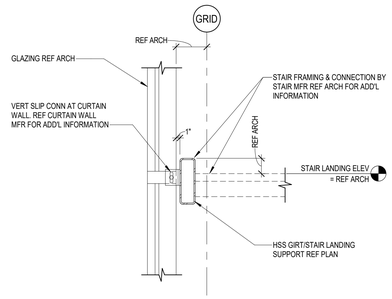

2 TYPICAL GIRT/STAIR LANDING SUPPORT
NO SCALE

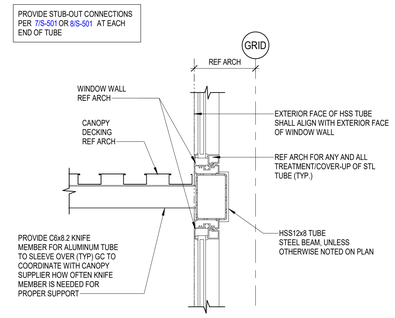

3 TYPICAL INTERMEDIATE WINDOW WALL SUPPORT DETAIL
NO SCALE

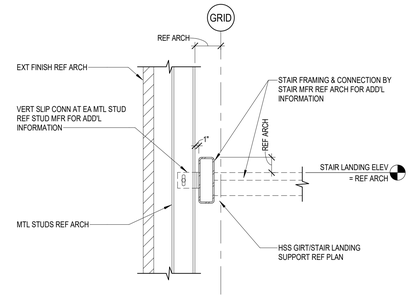

4 TYPICAL GIRT/STAIR LANDING SUPPORT
NO SCALE

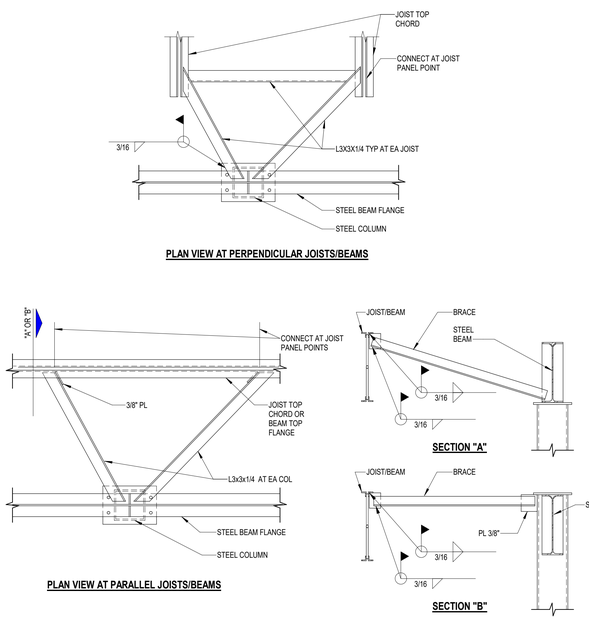

5 TYPICAL COLUMN BRACE AT JOISTS/BEAMS
NO SCALE

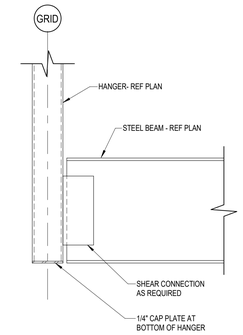

NOTE:
1. DECK NOT SHOWN FOR CLARITY.

6 TYPICAL BEAM TO HANGER CONNECTION
NO SCALE

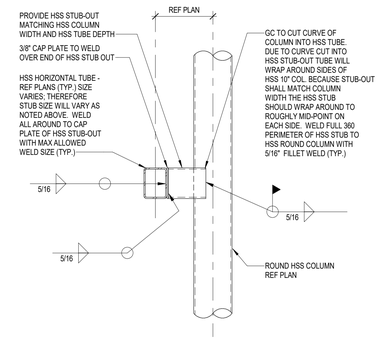

7 TYPICAL OFFSET HSS BEAM TO HSS COLUMN CONNECTION
3/4" = 1'-0"

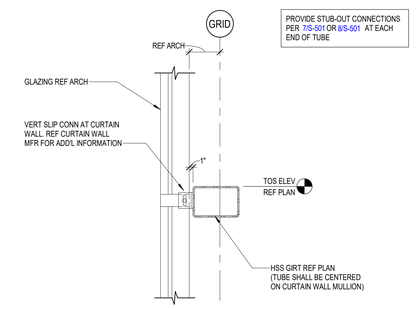

8 TYPICAL HSS GIRT AT GLAZING
NO SCALE

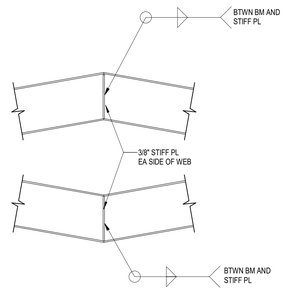

9 TYPICAL BENT BEAM DETAIL
NO SCALE

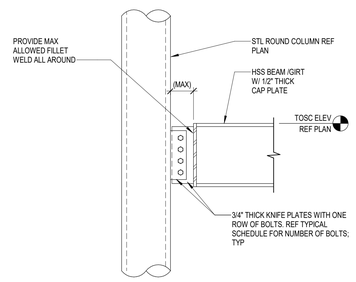

10 TYPICAL WIND GIRT AT ROUND COLUMN
NO SCALE

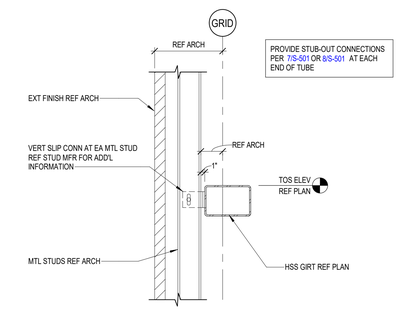

11 TYPICAL HSS GIRT AT EXTERIOR METAL STUD
NO SCALE

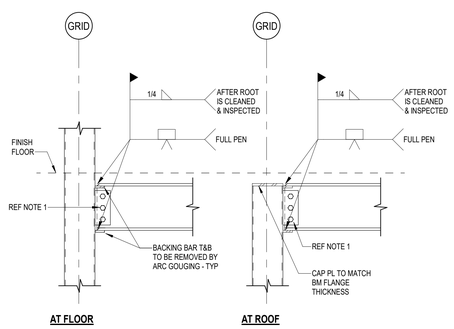

NOTES:
1. REF CONNECTION SCHEDULE
2. REF PLANS FOR LOCATIONS AND BEAM COLUMN SIZES.
3. PROVIDE COMPLETE PENETRATION GROOVE WELDS UNLESS OTHERWISE SHOWN.
4. AT TOP LEVELS PROVIDE COLUMN CAP PLATE.

12 TYPICAL MOMENT CONNECTION DETAIL AT HSS COLUMN
NO SCALE

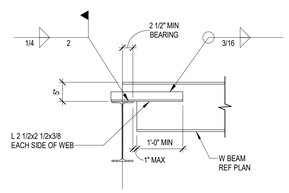

NOTES:
1. CUT BEAM TO MAINTAIN 5" DEPTH ON WEB.
2. MAXIMUM CAPACITY 10k.

13 TYPICAL DEATIL FOR 5" SEAT CONNECTION FOR STEEL BEAM
NO SCALE

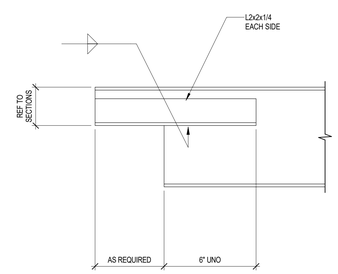

14 TYPICAL COPED CHANNEL OR BEAM
NO SCALE

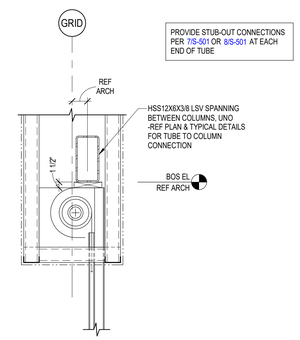

15 OVERHEAD COILING DOOR SUPPORT
3/4" = 1'-0"

Kubala ENGINEERS
Ph: (800)836-3874
www.kubalaengineers.com
TX. REG. NO. F-23612

PBK
www.pbk.com
TX FIRM: BR 1608
HOUSTON, TX
713-365-0608

PKG 3A GPHS - Fieldhouse

1000 Keene St.
Galena Park, TX 77547

CLIENT PROJECT NO: 240539

ISSUE FOR PROPOSAL

Galena Park ISD

KEY PLAN
NORTH: PLAN TRUE

STATE OF TEXAS
JOHN R. KUBALA
106120
06/10/2025
Kubala Engineers
F-23612

CLIENT	
Galena Park ISD	
DATE 06/10/2025	PROJECT NUMBER 240539

DRAWING HISTORY

No.	Description	Date

CHECKED BY: SI
DRAWN BY: CML

GENERAL STEEL NOTES AND TYP DETAILS

S-502

Plot Stamp:
6/9/2025 5:32:33 PM

GENERAL STEEL CONNECTION NOTES AND TYP DETAILS
S-503
FOR BLUEBEAM LABELING/OCR:

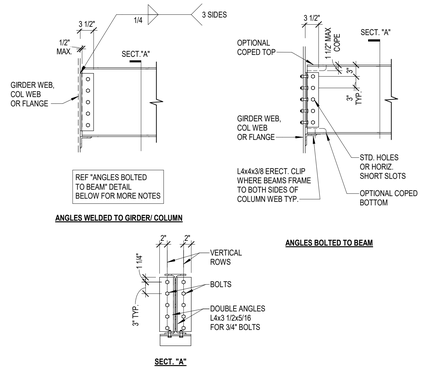

THIS CONNECTION SHALL BE USED ONLY WHEN CONNECTING BEAMS TO COLUMNS OR WHEN CONNECTING BEAMS TO GIRDERS WHERE GIRDER HAS BEAM CONNECTION ON ONE SIDE ONLY IF USED AT LOCATIONS WHERE A BEAM CONNECTION IS OPPOSED BY A BEAM CONNECTION ON THE OTHER SIDE OF THE SUPPORTING MEMBER. AN OSHA-APPROVED METHOD MUST BE USED FOR TEMPORARY ERECTION SUPPORT OF BOTH MEMBERS.

DOUBLE-ANGLE CONNECTION SCHEDULE

BEAM SIZE	NO. OF BOLTS PER VERT. ROW	ANGLE LENGTH (IN)	MAX CAPACITY (KIPS) (ASD)
W8	2	5 1/2	9
W10	2	5 1/2	14
W12	3	8 1/2	23
W14	3	8 1/2	28
W16	4	11 1/2	40
W18	4	11 1/2	48
W21	5	14 1/2	64
W24	6	17 1/2	83
W27	6	17 1/2	113
W30	7	20 1/2	119
W33	8	23 1/2	142
W36	9	26 1/2	160
W40	10	29 1/2	193
W44	10	29 1/2	195

NOTES:

1. ALLOWABLE CAPACITIES ARE IN KIPS (SERVICE LEVEL - UNFACTORED).
2. CAPACITIES BASED ON GRADE 50 BEAMS, A325-N BOLTS, AND A36 ANGLES.
3. HOLES SHALL BE STANDARD (STD) OR SHORT-SLOPPED (SSLT).
4. ALL INFORMATION SHOWN IN THE SCHEDULE ABOVE IS TO BE USED AS A MINIMUM REQUIREMENT FOR ALL CONNECTIONS.
5. ALTERNATE CONNECTION DETAILS ARE ACCEPTABLE PROVIDED SIGNED AND SEALED SHOP DRAWINGS AND CALCULATIONS ARE SUBMITTED, AND ALL CONNECTION DESIGNS ARE PERFORMED UNDER THE DIRECT SUPERVISION OF A PROFESSIONAL ENGINEER REGISTERED IN THE STATE WHERE THE PROJECT IS LOCATED.

1 TYPICAL DOUBLE ANGLE CONNECTION
NO SCALE

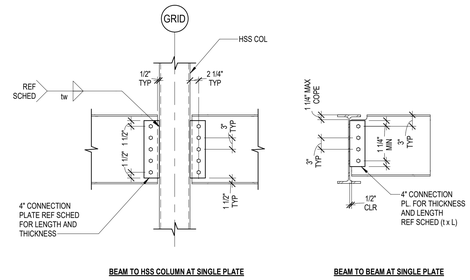

SINGLE PLATE CONNECTION SCHEDULE

BEAM SIZE	SHEAR PLATE (t x L)	WELD SIZE (tw)	A325-N BOLT DIAMETER	NO. OF BOLTS PER VERT. ROW	MAX CAPACITY (KIPS) (ASD)
W8	3/8" x 5 1/2	3/16"	3/4"	2	9
W10	3/8" x 5 1/2	1/4"	7/8"	2	14
W12	3/8" x 8 1/2	1/4"	7/8"	3	23
W14	3/8" x 8 1/2	1/4"	7/8"	3	28
W16	3/8" x 11 1/2	1/4"	7/8"	4	40
W18	1/2" x 11 1/2	1/4"	7/8"	4	48
W21	1/2" x 14 1/2	1/4"	1"	5	64
W24	1/2" x 17 1/2	1/4"	1"	6	83
W27	5/8" x 20 1/2	1/4"	1"	7	113
W30	5/8" x 20 1/2	1/4"	1"	7	119
W33	5/8" x 23 1/2	5/16"	1"	8	142
W36	5/8" x 26 1/2	5/16"	1"	9	160

NOTES:

1. ALLOWABLE CAPACITIES ARE IN KIPS (SERVICE LEVEL - UNFACTORED).
2. CAPACITIES BASED ON GRADE 50 BEAMS, A325N BOLTS, AND A36 PLATES.
3. HOLES SHALL BE STANDARD (STD) OR SHORT-SLOPPED (SSLT).
4. ALL INFORMATION SHOWN IN THE SCHEDULE ABOVE IS TO BE USED AS A MINIMUM REQUIREMENT FOR ALL CONNECTIONS.
5. ALTERNATE CONNECTION DETAILS ARE ACCEPTABLE PROVIDED SIGNED AND SEALED SHOP DRAWINGS AND CALCULATIONS ARE SUBMITTED, AND ALL CONNECTION DESIGNS ARE PERFORMED UNDER THE DIRECT SUPERVISION OF A PROFESSIONAL ENGINEER REGISTERED IN THE STATE WHERE THE PROJECT IS LOCATED.
6. WELD SIZES SHOWN IN THE ABOVE SCHEDULE ASSUME THAT THE SUPPORTING COLUMN / GIRDER MEETS THE REQUIRED THICKNESS OF THE WELD. IF THE SUPPORTING COLUMN / GIRDER DOES NOT MEET THE REQUIRED THICKNESS FOR THE SCHEDULED WELD SIZE, THE CONNECTION DESIGNER SHALL PROVIDE A SHEAR CONNECTION WHICH MEETS THE CAPACITIES PROVIDED IN THE SCHEDULE ABOVE.

2 TYPICAL SHEAR TAB BOLTED CONNECTION SCHEDULE
NO SCALE

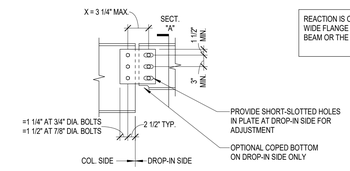

REACTION IS CALCULATED FROM THE DROP-IN SPAN. WIDE FLANGE SIZE IS THE SMALLER OF THE DROP-IN BEAM OR THE SUPPORTING BEAM.

NOTE:

1. SLOTS NOT ALLOWED WHERE H= _ IS USED

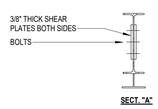

CONNECTION LOAD CAPACITY

WIDE FLANGE BEAM SIZE	# BOLTS PER VERT ROW	MINIMUM BEAM WEB THICKNESS (IN)	MAX REACTION (KIPS) (ASD)	
			3/4" DIA. BOLT X= 3 1/4" BOLTS	7/8" DIA. BOLT X= 3 3/4" BOLTS
W8x10	2	.170	15	14
W10x12	2	.190	18	24
W12x14	3	.200	30	29
W12x16	3	.220	33	32
W8 TO W12	2	.230	18	20
W12 TO W18	3	.235	36	34
W16 TO W24	4	.250	53	51
W18 TO W30	5	.300	70	67
W21 TO W44	6	.350	97	92
W24 TO W44	7	.395	126	119
W30 TO W44	8	.470	150	187
W33 TO W44	9	.550	173	234
W36 TO W44	10	.600	195	261
W40 TO W44	11	.630	217	287
W44	12	.710	238	313

3 TYPICAL SHEAR SPLICE CONNECTION
NO SCALE

NOTE:

1. DESIGN SINGLE BENT PLATE CONNECTION FOR SINGLE SHEAR AND ECCENTRICITY REFER TO CONNECTION "E"

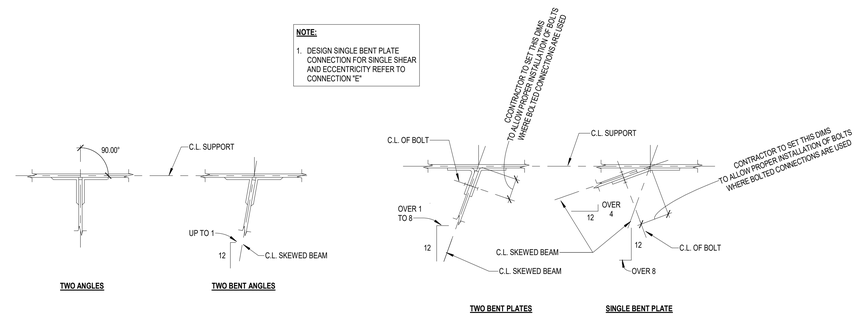

4 TYPICAL SKEWED SIMPLE FRAMING CONNECTION - BEAM TO BEAM
NO SCALE

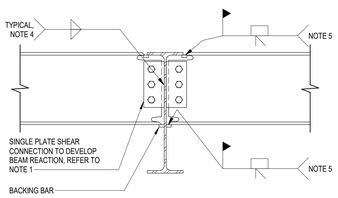

NOTES:

1. BOLTS IN WEB CONNECTION MAY BE SNUG-TIGHTENED OR PRETENSIONED A325 OR A490 BOLTS WITH HORIZONTAL SHORT-SLOTTED HOLES IN PLATE. IF BOLTS ARE TO BE PRETENSIONED, SNUG-TIGHTEN BOLTS PRIOR TO WELDING FLANGES AND PRETENSION AFTER WELDING FLANGES.
2. REFER TO SPECIFICATIONS FOR CONNECTION DESIGN CRITERIA.
3. PROVIDE PREDESIGNED SHEAR CONNECTIONS AS SHOWN IN AMERICAN INSTITUTE OF STEEL CONSTRUCTION LRFD MANUAL WHERE APPLICABLE.
4. MINIMUM FILLET WELD SIZE FOR SINGLE PLATE SHEAR CONNECTIONS SHALL BE 5/8 TIMES THE PLATE THICKNESS.
5. IF MOMENT IS SHOWN ON DRAWINGS, PARTIAL PENETRATION WELD TO DEVELOP MOMENT CAN BE USED IN LIEU OF COMPLETE JOINT PENETRATION WELD. FOR THIS CASE, WELD SHALL BE REQUIRED TO DEVELOP THE BEAM FLANGE FORCE COMPUTED AS FOLLOWS: Pu = (Mu)/(0.95D), WHERE:
   Mu = DESIGN MOMENT (KIP-FEET).
   D = BEAM DEPTH (INCHES).
   Pu = BEAM FLANGE FORCE (KIPS).

5 TYPICAL BEAM-TO-BEAM MOMENT CONNECTION DETAIL
NO SCALE

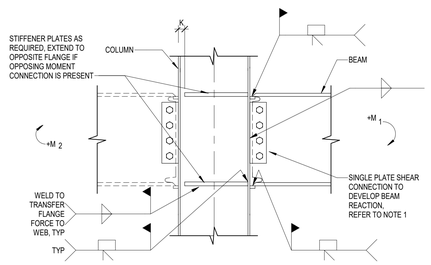

NOTES:

1. BOLTS IN WEB CONNECTION MAY BE SNUG-TIGHTENED OR PRETENSIONED A325 OR A490 BOLTS WITH HORIZONTAL SHORT-SLOTTED HOLES IN PLATE. IF BOLTS ARE TO BE PRETENSIONED, SNUG-TIGHTEN BOLTS PRIOR TO WELDING FLANGES AND PRETENSION AFTER WELDING FLANGES.
2. REFER TO SPECIFICATIONS FOR CONNECTION DESIGN CRITERIA.
3. PROVIDE PREDESIGNED SHEAR CONNECTIONS AS SHOWN IN AMERICAN INSTITUTE OF STEEL CONSTRUCTION MANUAL WHERE APPLICABLE.
4. MINIMUM FILLET WELD SIZE FOR SINGLE PLATE SHEAR CONNECTIONS SHALL BE 5/8 TIMES THE PLATE THICKNESS.
5. WHEN BEAM FRAMES ON ONLY ONE SIDE OF COLUMN OR WHEN BEAM MOMENTS ARE SIGNIFICANTLY UNBALANCED (I M + M I >>0), STRENGTHEN COLUMN WEB AS REQUIRED.
6. ALL CJP WELDS: CVN = 20FT-LBS AT 40°F.

6 TYPICAL MOMENT CONNECTION AT COLUMN FLANGE
NO SCALE

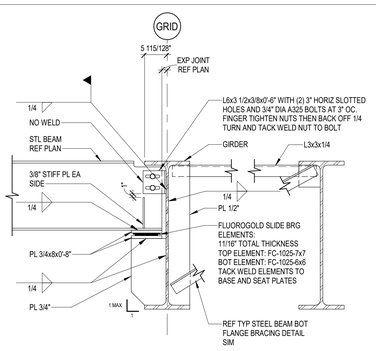

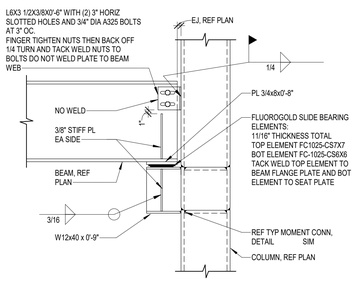

7 TYPICAL SLIDE BEARING CONNECTION
3/4" = 1'-0"

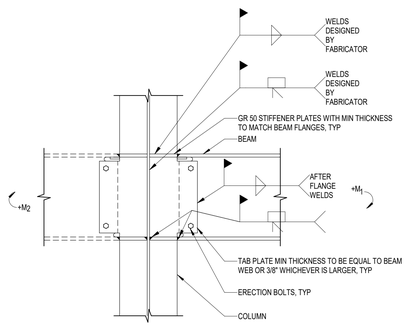

NOTES:

1. REFER TO SPECIFICATIONS FOR CONNECTION DESIGN CRITERIA.
2. WHEN BEAM FRAMES ON ONLY ONE SIDE OF COLUMN OR WHEN BEAM MOMENTS ARE SIGNIFICANTLY UNBALANCED (I M + M I >>0), STRENGTHEN COLUMN WEB AS REQUIRED.
3. ALL CJP WELDS: CVN = 20FT-LBS AT 40°F.

8 TYPICAL MOMENT CONNECTION AT COLUMN WEB
3/4" = 1'-0"

Kubala ENGINEERS
Ph: (800)246-3674
www.kubalaengineers.com
TX. REG. NO. F-23612

PBK
www.pbk.com
TX FIRM: BR 1608
HOUSTON, TX
713-966-0608

PKG 3A GPHS - Fieldhouse

1000 Keene St.
Galena Park, TX 77547

CLIENT PROJECT NO: 240539

ISSUE FOR PROPOSAL

KEY PLAN
NORTH: PLAN TRUE

STATE OF TEXAS
JOHN R. KUBALA
106120
LICENSED PROFESSIONAL ENGINEER
06/10/2025
Kubala Engineers
F-23612

CLIENT	
Galena Park ISD	
DATE 06/10/2025	PROJECT NUMBER 240539

DRAWING HISTORY

No.	Description	Date

CHECKED BY: SI
DRAWN BY: CML

GENERAL STEEL CONNECTION NOTES AND TYP DETAILS

S-503

Plot Stamp:
6/9/2025 5:32:34 PM

GENERAL COMPOSITE STEEL NOTES AND TYP DETAILS
S-504
FOR BLUEBEAM LABELING/OCR:

SLABS FORM DECK (AT FLOORS):

1. FLOOR DECK SHALL BE CONTINUOUS OVER FOUR OR MORE SUPPORTS. AT LOCATIONS WHERE SINGLE OR DOUBLE SPAN CONDITIONS OCCUR, THE CONTRACTOR SHALL EITHER SHORE THE DECK, OR ADJUST THE GAGE THICKNESS OF THE DECK IN ACCORDANCE WITH THE MANUFACTURER'S RECOMMENDATIONS. DECK SHALL BE DESIGNED TO PROVIDE EQUIVALENT OR GREATER LOAD CAPACITY AS THE SPECIFIED DECK SUPPORT OVER FOUR SUPPORTS.
2. DESIGN OF COMPOSITE STEEL BEAMS AND DETAILS FOR CONSTRUCTION ARE BASED ON THE FOLLOWING DECK SYSTEM:

METAL DECK SCHEDULE

DECK DESIGNATION	DECK GAUGE	SDI DECK TYPE	DECK DEPTH (IN)	Ie+ (IN4)	Ie- (IN4)	Se+ (IN3)	Se- (IN3)	Fy (KSI)	METAL DECK CONNECTION SCHEDULE: FASTEN DECK TO SUPPORT MEMBERS: ATTACHMENT PATTERN (W/N)	FASTEN DECK TO SUPPORT MEMBERS: SUPPORT FASTENERS	SIDELAP FASTENERS
3.0 VLI	20	COMPOSITE	3.0	0.919	0.921	0.512	0.539	50	36/4	5/8" PUDDLE WELD	1-1/2" TOP ARC SEAM WELDS @ 12" OC
2.0 VLI	20	COMPOSITE	2.0	0.409	0.407	0.326	0.337	50	36/4	5/8" PUDDLE WELD	1-1/2" TOP ARC SEAM WELDS @ 12" OC

Ie+: POSITIVE EFFECTIVE MOMENT OF INERTIA
Ie-: NEGATIVE EFFECTIVE MOMENT OF INERTIA
Se+: POSITIVE EFFECTIVE SECTION MODULUS
Se-: NEGATIVE EFFECTIVE SECTION MODULUS
FY:YIELD STRENGTH
W/N: SHEET WIDTH / NUMBER OF CONNECTIONS EACH SHEET

3. COMPOSITE STEEL BEAMS DO NOT REQUIRE SHORING TO SUPPORT THE WET WEIGHT OF CONCRETE. BEAMS WILL BE HIGHLY STRESSED AS CONCRETE IS PLACED AND MUST BE POSITIVELY BRACED BY THE METAL DECK CONNECTIONS. DO NOT EXCEED CONCRETE THICKNESSES SHOWN.
4. WARNING: IN NON-SHORED CONSTRUCTION, EXCESSIVE CONCRETE WEIGHT DURING CASTING CAN CAUSE SUPPORTING BEAMS TO COLLAPSE. DO NOT, UNDER ANY CIRCUMSTANCES, EXCEED THE DESIGN SLAB THICKNESS BY MORE THAN 3/4 INCH. CAREFULLY CHECK BEAM CAMBERS AND RETURN ANY FOUND TO BE OUT OF TOLERANCE TO THE SHOP FOR CORRECTION.
5. PRIOR TO ERECTING THE FIRST COMPOSITE BEAMS, THE CONTRACTOR SHALL CALL A SPECIAL PRE-CONSTRUCTION MEETING WITH APPLICABLE SUBCONTRACTORS, TESTING LABORATORY, ARCHITECT AND STRUCTURAL ENGINEER TO REVIEW ALL REQUIREMENTS AND ESTABLISH A QUALITY CONTROL PROCEDURE.
6. THE FINISHED COMPOSITE FLOOR SHALL NOT BE LOADED WITH CONSTRUCTION MATERIALS BEFORE THE CONCRETE HAS ATTAINED 75 PERCENT OF ITS SPECIFIED STRENGTH.
7. ALL SHEAR STUDS SHALL BE FIELD APPLIED, UNLESS OTHERWISE NOTED. SIZE SHALL BE SELECTED FROM THE FOLLOWING TABLE DEPENDING ON DECK AND SLAB DIMENSIONS:

DECK THICKNESS	TOTAL SLAB THICKNESS	SHEAR STUDS
3"	5.5"	3/4" DIA. X 5"
3"	6.5"	3/4" DIA. X 5"
3"	7.5"	3/4" DIA. X 5"
2"	5.5"	3/4" DIA. X 5"
2"	6.5"	3/4" DIA. X 5"

8. PLACE THE INDICATED NUMBER OF SHEAR STUDS ALONG THE LENGTH OF THE BEAM OR BEAM SEGMENT AS SHOWN IN THE SHEAR STUD PLACEMENT DIAGRAMS. STUDS SHALL BE EQUALLY SPACED IN A SINGLE ROW WHERE POSSIBLE, ALLOWING A SINGLE STUD IN THE DECK FLUTES, WHERE APPLICABLE. WHERE ADDITIONAL STUDS ARE REQUIRED TO OBTAIN THE SPECIFIED NUMBER OF STUDS IN A LENGTH OF BEAM, PLACE STUDS IN TANDEM PAIRS PER THE SHEAR STUD PLACEMENT DIAGRAM. THE CONTRACTOR SHALL BE RESPONSIBLE FOR DETERMINING PROPER STUD LAYOUT FOR EACH BEAM PRIOR TO INSTALLATION OF STUDS IN THE FIELD. REFER TO TYPICAL DETAILS FOR PLACEMENT OF SHEAR STUDS ON BEAMS.
9. WHERE MULTIPLE NUMBERS OF STUDS ARE SHOWN FOR A BEAM, PLACE EACH QUANTITY OF STUDS IN THE CORRESPONDING BEAM SEGMENT WHERE THE NUMBER IS SHOWN.
10. PROVIDE CAMBER IN MEMBERS WHERE INDICATED. SPECIFIED CAMBER APPLIES AT JOBSITE, JUST PRIOR TO ERECTION, LYING DOWN FLAT SO THAT MEMBER WEIGHT HAS NO EFFECT. CONTRACTOR SHALL TAKE NECESSARY PRECAUTIONS TO PREVENT OR COMPENSATE FOR CAMBER LOSS DURING SHIPMENT. MEASURED CAMBER IN MEMBERS UP TO 50'-0" LONG SHALL BE WITHIN A TOLERANCE OF -0" TO +1/2" FROM AMOUNT SPECIFIED. FOR MEMBERS GREATER THAN 50'-0" LONG, BOTH POSITIVE AND NEGATIVE TOLERANCE MAY INCREASE 1/8" FOR EVERY 10'-0" OF LENGTH IN EXCESS OF 50'-0". MEMBERS WITH A FIELD MEASURED CAMBER OUTSIDE OF SPECIFIED TOLERANCE SHALL BE RETURNED TO SHOP.
11. SUPPORT CAMBERED MEMBERS DURING SHIPMENT AND HANDLING IN A MANNER WHICH WILL NOT RESULT IN LOSS OF CAMBER.
12. THE CONTRACTOR SHALL MEASURE AND RECORD CAMBER OF ALL BEAMS UPON ARRIVAL AND BEFORE ERECTION FOR COMPLIANCE WITH THE SPECIFIED CAMBER. MEASURE LYING FLAT WITH WEB HORIZONTAL. MEMBERS OUTSIDE THE CAMBER TOLERANCE SHALL BE RETURNED TO THE SHOP FOR CORRECTION. CAMBERS MEASURED BY THE CONTRACTOR ARE TO BE VERIFIED BY THE OWNER'S TESTING LABORATORY.
13. PLACE AN EXTRA LAYER OF WIRE MESH 6'-0" WIDE IN THE TOP OF THE SLAB ABOVE ALL INTERIOR GIRDERS WHICH RUN PARALLEL TO THE DECK SPAN.
14. PLACE SUPPORTS FOR WIRE MESH ON METAL DECK, SO THAT THE MESH IS MAINTAINED IN POSITION 3/4" BELOW THE TOP OF SLAB.
15. METAL DECK SHALL, IN GENERAL, BE FASTENED TO STEEL FRAMEWORK BY WELDING SHEAR STUDS THROUGH THE DECK. IF FIELD WELDED SHEAR STUDS THROUGH METAL DECK ARE NOT CALLED FOR IN SCHEDULE OR ON DRAWINGS,DECK SHALL BE WELDED TO STEEL FRAMEWORK BY PUDDLE WELDS NOT LESS THAN 3/4" DIAMETER, SPACED NOT MORE THAN 1'-0". WHERE SHEAR STUD SPACING EXCEEDS SPECIFIED MAXIMUM DECK WELD SPACING, USE ADDITIONAL PUDDLE WELDS AT 1'-0" BETWEEN STUDS. WHERE 2 UNITS ABUT, EITHER END-TO-END OR SIDE-TO-SIDE, EACH SHALL BE SO FASTENED TO STEEL FRAMING.
16. WELD GIRDER FILLERS TO STEEL BEAM WITH 2" LONG FILLET WELDS AT A MAXIMUM SPACING OF 12 INCHES. CONNECT SIDES OF ADJACENT UNITS WITH 1 1/2" LONG WELDS AT 3'-0" OC MAX.
17. DEFLECTION OF DECK AND/OR STEEL WILL TAKE PLACE WHEN CONCRETE IS POURED. THE SPECIFIED CONCRETE SLAB THICKNESS SHALL BE MAINTAINED AT COLUMN LOCATIONS. SLAB THICKNESS AWAY FROM THE COLUMNS WILL VARY DUE TO BEAM AND DECK DEFLECTIONS. MINIMUM THICKNESS OF CONCRETE REQUIRED MUST BE PROVIDED, AND TOP SURFACES OF SLABS MUST BE CONSTRUCTED WITHIN SPECIFIED TOLERANCES. WHERE THERE IS RESIDUAL CAMBER IN STEEL BEAMS, FINISHED CONCRETE SURFACE SHALL FOLLOW CAMBER OF BEAMS. BUT FINISHED SURFACE SHALL NOT VARY BY MORE THAN 1/4" FROM ONE BEAM TO ANOTHER ADJACENT BEAM, NOR 1/2" TOTAL FOR LENGTH OF FLOOR. CAMBERED BEAMS ARE INTENDED TO DEFLECT TO APPROXIMATELY A STRAIGHT LINE UNDER FULL WEIGHT OF CONCRETE SLAB. IF ALL TOP OF STEEL ELEVATIONS AND CAMBERS ARE AS SPECIFIED IN THE DRAWINGS. THE CONTRACTOR SHALL BE FAMILIAR WITH THE CONDITIONS OF THE PROJECT AND FURNISH THE MATERIALS REQUIRED TO CREATE THE SPECIFIED FLOOR ELEVATION. NO ADJUSTMENT WILL BE MADE TO CONTRACT PRICE FOR ADDITIONAL CONCRETE REQUIRED BECAUSE OF DEFLECTION OF DECK OR STEEL OR DUE TO DIFFERENTIAL CAMBER.
18. NO CONDUITS ALLOWED IN SLABS WITHOUT PRIOR APPROVAL FROM ENGINEER OF RECORD.
19. DO NOT HANG CONCENTRATED LOAD EXCEEDING 100LB FROM COMPOSITE METAL DECKING. ALL MEP APPURTENANCES EXCEEDING 100LB SHALL BE SUPPORTED BY STEEL BEAMS OR JOISTS.
20. ALL METAL FLOOR DECKING SHALL BE GALVANIZED WITH [G90] COATING CONFORMING TO ASTM A924.

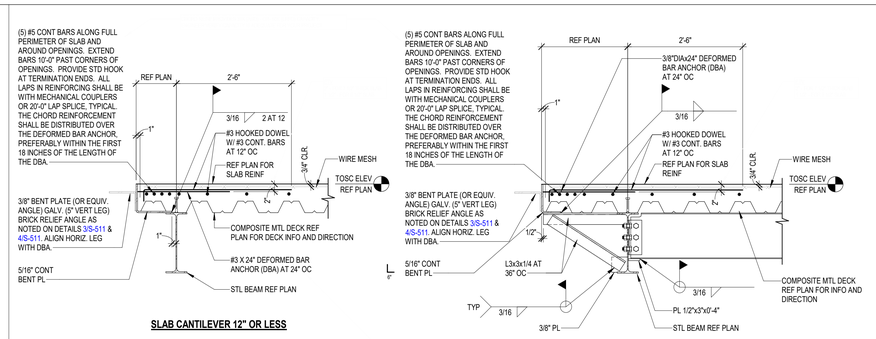

SLAB CANTILEVER 12" OR LESS

SLAB CANTILEVER >12" AND <30"

1 TYPICAL COMPOSITE SLAB EDGE DETAIL
NO SCALE

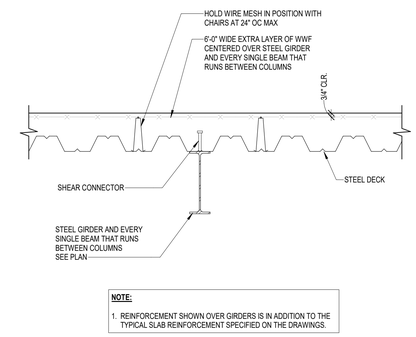

NOTE:
1. REINFORCEMENT SHOWN OVER GIRDERS IS IN ADDITION TO THE TYPICAL SLAB REINFORCEMENT SPECIFIED ON THE DRAWINGS.

2 TYPICAL DETAIL FOR ADD'L REINF IN COMPOSITE SLAB AT INTERIOR GIRDERS
NO SCALE

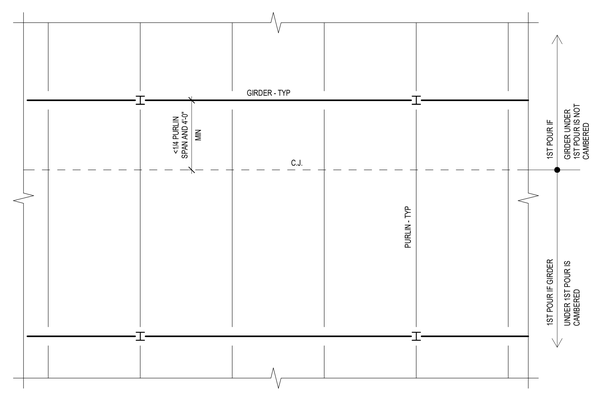

PLAN
CONSTRUCTION JOINT - PARALLEL TO GIRDER

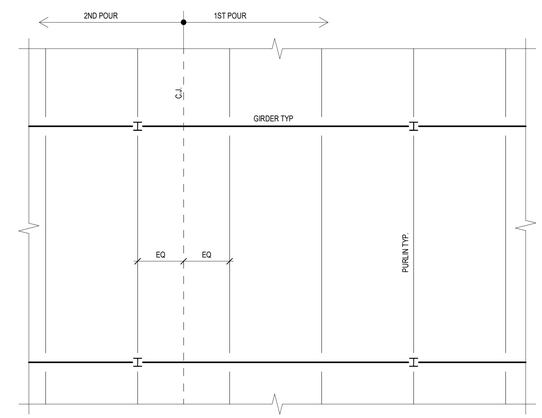

PLAN
CONSTRUCTION JOINT - PARALLEL TO PURLINS

5 TYPICAL DETAIL FOR COMPOSITE SLAB CONSTRUCTION JOINTS
NO SCALE

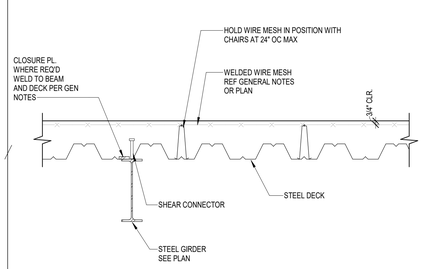

3 TYPICAL DECK PARALLEL TO BEAM
NO SCALE

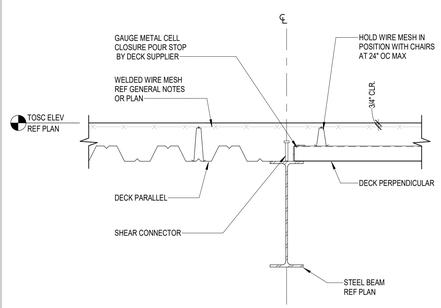

4 TYPICAL DECKING DIRECTION CHANGE
NO SCALE

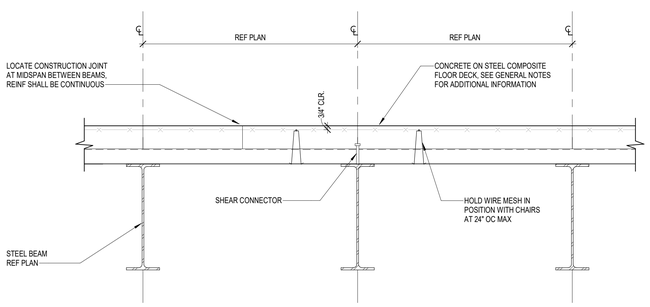

6 TYPICAL DECK PERPENDICULAR TO BEAM
NO SCALE

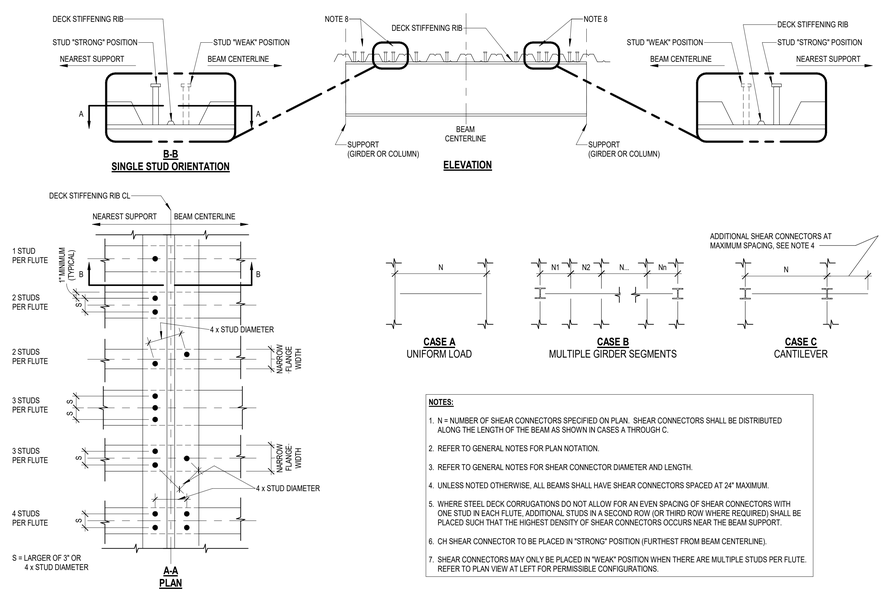

NOTES:
1. N = NUMBER OF SHEAR CONNECTORS SPECIFIED ON PLAN. SHEAR CONNECTORS SHALL BE DISTRIBUTED ALONG THE LENGTH OF THE BEAM AS SHOWN IN CASES A THROUGH C.
2. REFER TO GENERAL NOTES FOR PLAN NOTATION.
3. REFER TO GENERAL NOTES FOR SHEAR CONNECTOR DIAMETER AND LENGTH.
4. UNLESS NOTED OTHERWISE, ALL BEAMS SHALL HAVE SHEAR CONNECTORS SPACED AT 24" MAXIMUM.
5. WHERE STEEL DECK CORRUGATIONS DO NOT ALLOW FOR AN EVEN SPACING OF SHEAR CONNECTORS WITH ONE STUD IN EACH FLUTE, ADDITIONAL STUDS IN A SECOND ROW (OR THIRD ROW WHERE REQUIRED) SHALL BE PLACED SUCH THAT THE HIGHEST DENSITY OF SHEAR CONNECTORS OCCURS NEAR THE BEAM SUPPORT.
6. CH SHEAR CONNECTOR TO BE PLACED IN "STRONG" POSITION (FURTHEST FROM BEAM CENTERLINE).
7. SHEAR CONNECTORS MAY ONLY BE PLACED IN "WEAK" POSITION WHEN THERE ARE MULTIPLE STUDS PER FLUTE. REFER TO PLAN VIEW AT LEFT FOR PERMISSIBLE CONFIGURATIONS.

SHEAR CONNECTORS HAVE HIGHEST CAPACITIES WHEN PLACED AS SHOWN. IF STUDS ARE NOT PLACED PER THIS DETAIL, 25% MORE STUDS MUST BE INSTALLED. EQUALLY SPACE ADDITIONAL STUDS ALONG THE BEAM.

7 TYPICAL SHEAR CONNECTOR PLACEMENT DIAGRAM - IN STUDS " STRONG" POSITION
NO SCALE

Kubala ENGINEERS
Ph.: (800)246-3674
www.kubalaengineers.com
TX. REG. NO. F-23612

PBK
www.pbk.com
TX FIRM: BR 1608
HOUSTON, TX
713-966-0608

PKG 3A GPHS - Fieldhouse

1000 Keene St.
Galena Park, TX 77547

CLIENT PROJECT NO: 240539

ISSUE FOR PROPOSAL

Galena Park ISD

KEY PLAN
NORTH: PLAN TRUE

STATE OF TEXAS
JOHN R. KUBALA
106120
06/10/2025
Kubala Engineers
F-23612

CLIENT	
Galena Park ISD	
DATE 06/10/2025	PROJECT NUMBER 240539

DRAWING HISTORY

No.	Description	Date

CHECKED BY: SI
DRAWN BY: CML

GENERAL COMPOSITE STEEL NOTES AND TYP DETAILS

S-504

Plot Stamp:
6/9/2025 5:32:35 PM

GENERAL COMPOSITE STEEL NOTES AND TYP DETAILS
S-505

FOR BLUEBEAM LABELING/OCR:

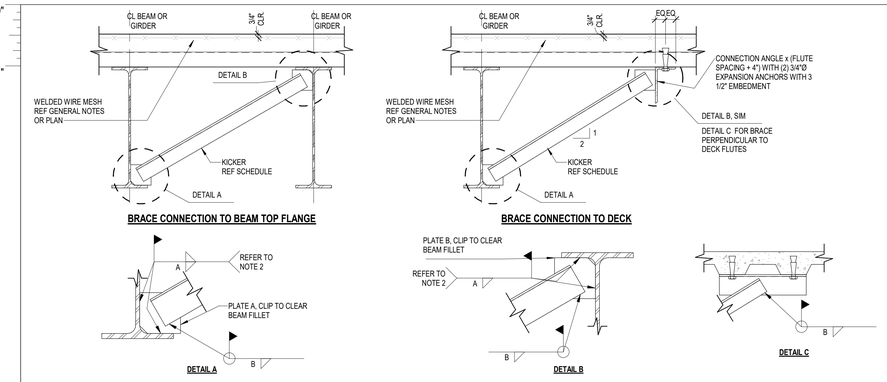

CONNECTION SCHEDULE				
KICKER LENGTH	KICKER SIZE	PLATES A & B	WELDS A & B	CONNECTION ANGLE
UP TO 3'-0"	L2 1/2x2 1/2 x3/16	4x4x3/8	3/16	L3x3x1/4
3'-0" TO 8'-0"	L3x3x1/4	4x4x3/8	3/16	L4x4x1/4
8'-0" TO 12'-0"	L4x4x1/4	5x5x3/8	3/16	N/A
12'-0" TO 16'-0"	L5x5x5/16	6x6x3/8	1/4	N/A

NOTES:

1. REFER TO PLAN AND DETAILS FOR LOCATIONS OF ANGLE BRACES.
2. FIELD WELDING OF CONNECTION PLATES SHALL BE AT FABRICATOR'S OPTION.

1 TYPICAL BEAM BOTTOM FLANGE BRACE (COMPOSITE CONSTRUCTION)
NO SCALE

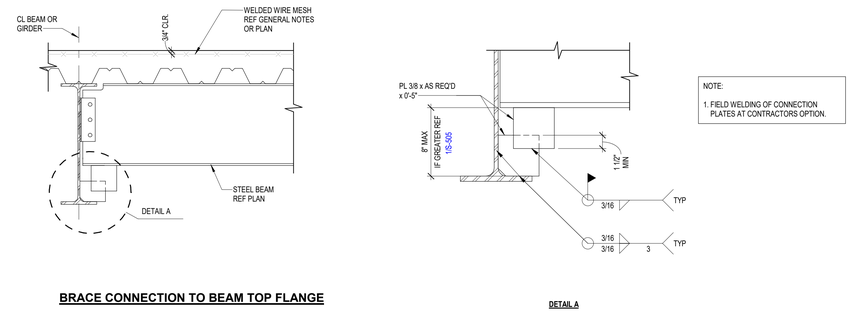

NOTE:

1. FIELD WELDING OF CONNECTION PLATES AT CONTRACTORS OPTION.

2 TYPICAL BEAM BOTTOM FLANGE BRACE (COMPOSITE CONSTRUCTION)
1" = 1'-0"

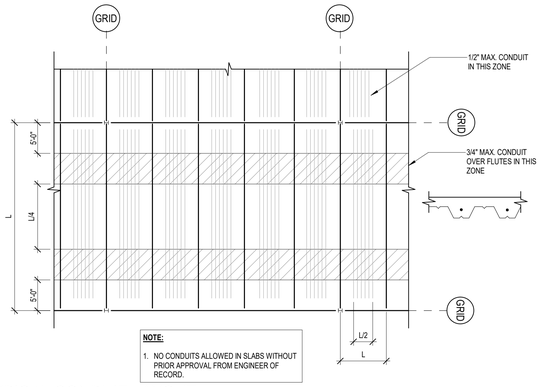

NOTE:

1. NO CONDUITS ALLOWED IN SLABS WITHOUT PRIOR APPROVAL FROM ENGINEER OF RECORD.

3 TYPICAL CONDUIT LAYOUT
NO SCALE

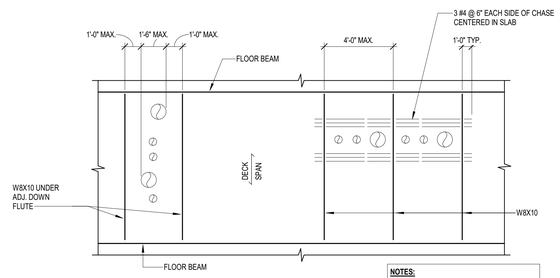

NOTES:

1. PLACE W8X10'S UNDER DECK RIBS AND CONNECT TO FLOOR BEAMS WITH STANDARD DOUBLE ANGLE COPED CONNECTIONS. WELD TO DECK AT 1/3 POINTS. (NO HEADED STUDS REQUIRED). REF DETAILS 7/S-505 & 8/S-505 FOR OPENINGS 6" AND LARGER.

4 TYPICAL DETAIL FOR FLOOR STRENGTHENING AT PLUMBING CHASE
NO SCALE

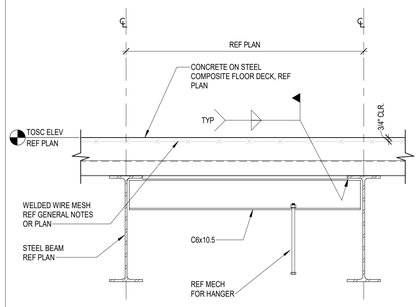

5 TYPICAL MECHANICAL HANGER AT FLOOR
NO SCALE

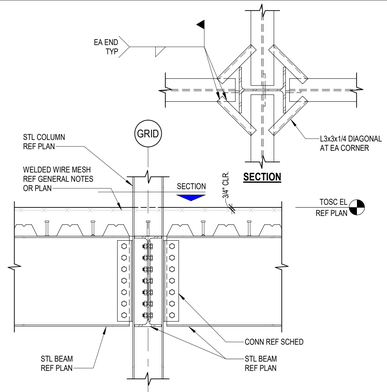

6 TYPICAL DECK SUPPORT AT COLUMN DETAIL
3/4" = 1'-0"

NOTE:

1. REFER TO DETAIL 4/S-505 FOR OPENINGS LESS THAN 6" WIDE UNLESS DETAILED OTHERWISE. FOR OPENINGS LARGER THAN 2'-0" WIDE, PROVIDE BEAM FRAMING PER 8/S-505.

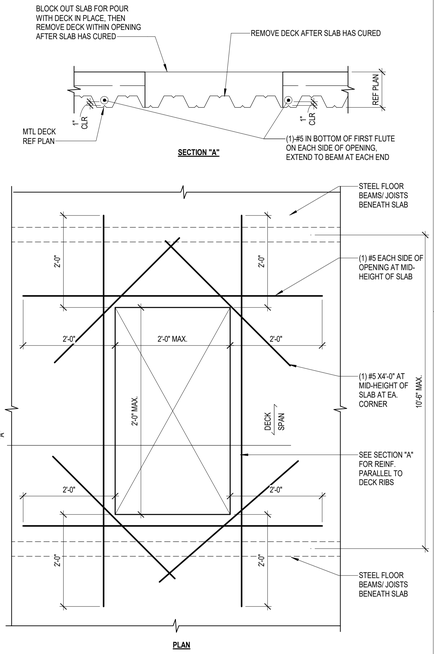

7 TYPICAL DETAIL FOR SMALL MECHANICAL OPENING FROM 6" WIDE TO 24" WIDE IN COMPOSITE SLAB
NO SCALE

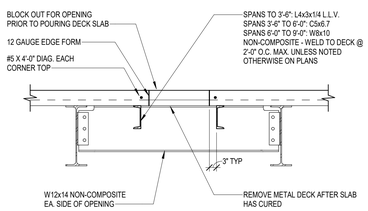

8 TYPICAL DETAIL FOR LARGE MECHANICAL OPENING IN COMPOSITE SLAB OVER 2'-0" PERPENDICULAR TO DECK SPAN
NO SCALE

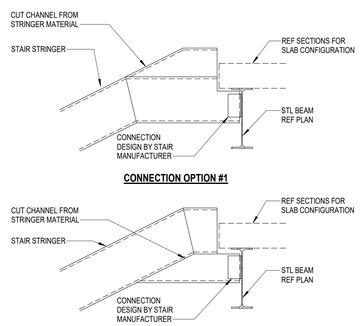

THE DESIGN OF THE STAIR CONNECTIONS TO THE STRUCTURE IS THE RESPONSIBILITY OF THE STAIR SUPPLIER. OTHER OPTIONS MAY BE ACCEPTABLE, HOWEVER THE LOAD MUST BE DELIVERED TO THE STRUCTURAL STEEL AND NOT THE SLAB EDGE.

9 TYPICAL CONNECTION OPTIONS FOR STAIR STRINGER TO STRUCTURAL STEEL
3/4" = 1'-0"

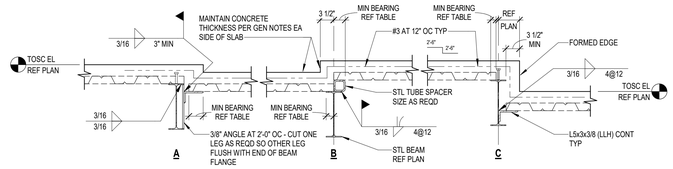

NORMAL WEIGHT CONCRETE				
	MINIMUM BEARING LENGTH REQUIRED			
	SLAB DEPTH ABOVE FLUTES			
DECK TYPE	2 1/2	3	3 1/2	4 1/2
3 VLI 22	2 1/2	2 1/2	2 1/2	2 1/2
3 VLI 20	2 1/2	2 1/2	2 1/2	2 1/2
2 VLI 22	2	2	2	2
2 VLI 20	1 1/2	1 1/2	1 1/2	2
2 VLI 18	1 1/2	1 1/2	1 1/2	2

NOTE
MINIMUM BEARING FOR ALL DECK TYPES AND SLAB THICKNESSES IS 1 1/2" UNLESS LISTED IN THE TABLE ABOVE.

LIGHTWEIGHT CONCRETE				
	MINIMUM BEARING LENGTH REQUIRED			
	SLAB DEPTH ABOVE FLUTES			
DECK TYPE	2 1/2	3	3 1/2	4 1/4
3 VLI 22	2 1/2	2 1/2	2 1/2	2 1/2
3 VLI 20	2	2 1/2	2 1/2	2 1/2
2 VLI 22	1 1/2	2	2	2

NOTE
MINIMUM BEARING FOR ALL DECK TYPES AND SLAB THICKNESSES IS 1 1/2" UNLESS LISTED IN THE TABLE ABOVE.

10 TYPICAL FLOOR DECK SUPPORTS AT SLAB OFFSETS
3/4" = 1'-0"

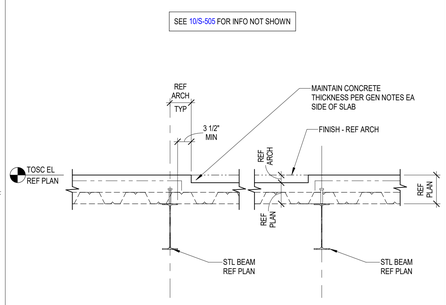

11 TYPICAL FLOOR DECK SUPPORTS AT SLAB OFFSETS
3/4" = 1'-0"

NOTE:

1. PROVIDE EXTRA HORIZ REINF AT EACH SIDE OF DRAIN EQUAL TO REINFORCING INTERRUPTED BY DRAIN DEPRESSION

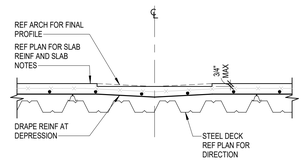

VERIFY LOCATION WITH ARCHITECTURAL DRAWINGS

12 TYPICAL SLAB RECESS AT COMPOSITE SLAB
3/4" = 1'-0"

Kubala ENGINEERS
Ph: (800)246-3674
www.kubalaengineers.com
TX. REG. NO. F-23612

PBK
www.pbk.com
TX FIRM: BR 1608
HOUSTON, TX
713-965-0608

PKG 3A GPHS - Fieldhouse

1000 Keene St.
Galena Park, TX 77547

CLIENT PROJECT NO: 240539

ISSUE FOR PROPOSAL

KEY PLAN
NORTH: PLAN TRUE

STATE OF TEXAS
JOHN R. KUBALA
106120
PROFESSIONAL ENGINEER
06/10/2025
Kubala Engineers
F-23612

CLIENT	
Galena Park ISD	
DATE 06/10/2025	PROJECT NUMBER 240539

DRAWING HISTORY

No.	Description	Date

CHECKED BY: SI
DRAWN BY: CML

GENERAL COMPOSITE STEEL NOTES AND TYP DETAILS

S-505

Plot Stamp:
6/9/2025 5:32:36 PM

TYPICAL STEEL DECK DETAILS
S-506

FOR BLUEBEAM LABELING/OCR:

0"
1"

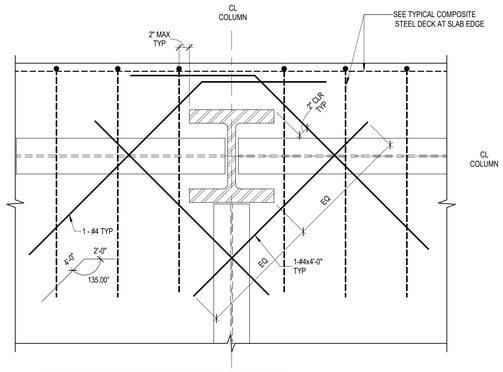

NOTES:

1. SLAB REINFORCEMENT SHOWN TO BE PLACED IMMEDIATELY BELOW THE TYPICAL SLAB TOP BAR REINFORCEMENT

2. SEE TYPICAL DECK SUPPORT AT COLUMN DETAIL

1 TYPICAL SLAB REINFORCEMENT AT EDGE COLUMN, SLAB EDGE EXTENDS 2" OR MORE BEYOND FACE OF COLUMN
1" = 1'-0"

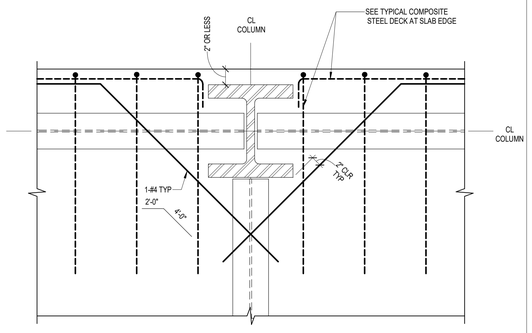

NOTES:

1. SLAB REINFORCEMENT SHOWN TO BE PLACED IMMEDIATELY BELOW THE TYPICAL SLAB TOP BAR REINFORCEMENT

2. SEE TYPICAL DECK SUPPORT AT COLUMN DETAIL

2 TYPICAL SLAB REINFORCEMENT AT EDGE COLUMN, SLAB EDGE EXTENDS LESS THAN 2" BEYOND FACE OF COLUMN
1" = 1'-0"

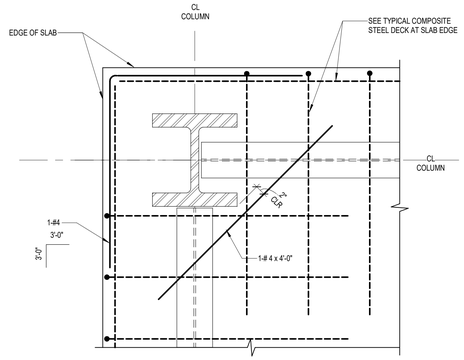

NOTES:

1. SLAB REINFORCEMENT SHOWN TO BE PLACED IMMEDIATELY BELOW THE TYPICAL SLAB TOP BAR REINFORCEMENT

2. SEE TYPICAL DECK SUPPORT AT COLUMN DETAIL

3 TYPICAL SLAB REINFORCEMENT AT CORNER COLUMN, SLAB EDGE EXTENDS 2" OR MORE BEYOND FACE OF COLUMN
1" = 1'-0"

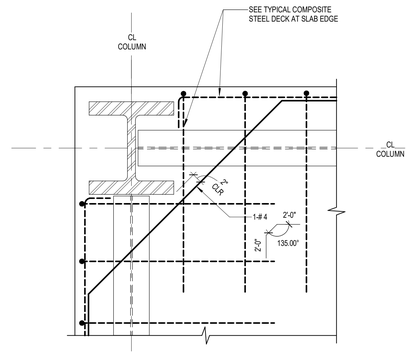

NOTES:

1. SLAB REINFORCEMENT SHOWN TO BE PLACED IMMEDIATELY BELOW THE TYPICAL SLAB TOP BAR REINFORCEMENT

2. SEE TYPICAL DECK SUPPORT AT COLUMN DETAIL

4 TYPICAL SLAB REINFORCEMENT AT EDGE COLUMN, SLAB EDGE EXTENDS LESS THAN 2" BEYOND FACE OF COLUMN
1" = 1'-0"

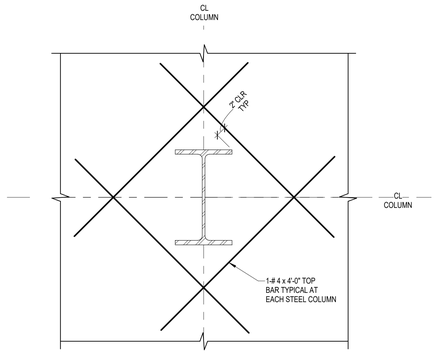

NOTES:

1. SLAB REINFORCEMENT SHOWN TO BE PLACED IMMEDIATELY BELOW THE TYPICAL SLAB TOP BAR REINFORCEMENT

2. SEE TYPICAL DECK SUPPORT AT COLUMN DETAIL

5 TYPICAL SLAB REINFORCEMENT AT INTERIOR COLUMN
1" = 1'-0"

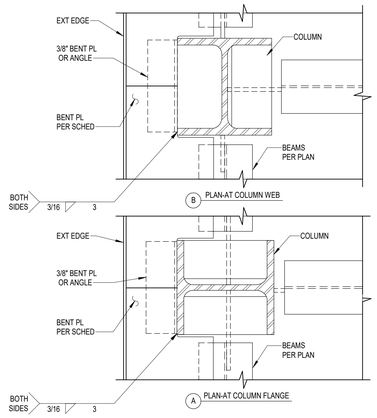

6 EDGE OF DECK AT EXTERIOR COLUMN
1" = 1'-0"

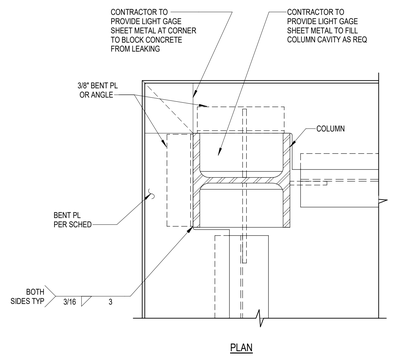

PLAN

7 EDGE OF DECK AT EXTERIOR CORNER COLUMN
1" = 1'-0"

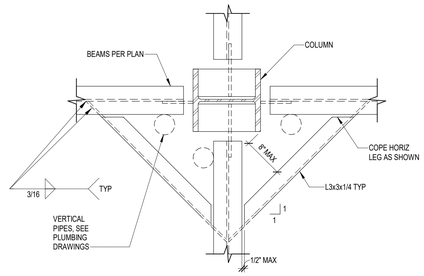

PLAN

8 OPENINGS ADJACENT TO COLUMN
1" = 1'-0"

Kubala ENGINEERS
Ph: (800)246-3674
www.kubalaengineers.com
TX. REG. NO. F-23612

PBK
www.pbk.com
TX FIRM: BR 1608
HOUSTON, TX
713-965-0608

PKG 3A GPHS - Fieldhouse

1000 Keene St.
Galena Park, TX 77547

CLIENT PROJECT NO: 240539

ISSUE FOR PROPOSAL

KEY PLAN
NORTH: PLAN TRUE

STATE OF TEXAS
JOHN R. KUBALA
106120
06/10/2025
Kubala Engineers
F-23612

CLIENT	
Galena Park ISD	
DATE 06/10/2025	PROJECT NUMBER 240539

DRAWING HISTORY

No.	Description	Date

CHECKED BY: SI

DRAWN BY: CML

TYPICAL STEEL DECK DETAILS

S-506

Plot Stamp:
6/9/2025 5:32:37 PM

GENERAL STEEL NOTES AND TYP DETAILS
S-507
FOR BLUEBEAM LABELING/OCR:

0"
1"

STEEL JOIST FRAMING:

1. OPEN WEB STEEL JOISTS SHALL BE DESIGNED, MANUFACTURED AND ERECTED PER THE LATEST STEEL JOIST INSTITUTE (SJI) SPECIFICATIONS. JOISTS SHALL BE CAMBERED FOR DEAD LOAD. PROVIDE THE STANDARD SJI AMOUNT OF CAMBER UNLESS NOTED OTHERWISE ON THE DRAWINGS. THE JOIST SUPPLIER SHALL ADJUST CAMBERS AT JOISTS ADJACENT TO EACH OTHER THAT HAVE VARYING LENGTHS AND AT JOISTS ADJACENT TO STEEL BEAMS WITH SET ELEVATIONS SO THAT THE ELEVATIONS FOR ADJACENT MEMBERS, PRIOR TO ERECTION OF DECK, DO NOT VARY BY MORE THAN 1".

2. STAGGER JOISTS ENDS AS REQUIRED (AT NARROW BEAMS) IN ORDER TO ACHIEVE 2 1/2 INCH MINIMUM BEARING. HORIZONTAL AND DIAGONAL BRIDGING SHALL BE PROVIDED PER SJI SPECIFICATIONS, AND SHALL BE WELDED TO STEEL BEAMS AND DECK SUPPORT ANGLES AT ENDS.

3. AT JOIST SPANS WHERE REQUIRED BY SJI, BOLTED DIAGONAL BRIDGING NEAREST THE CENTER OF THE SPAN SHALL BE INSTALLED AT EACH JOIST PRIOR TO THE SLACKENING OF HOIST LINES. FOR JOISTS THAT SPAN 40 FEET AND GREATER, THE JOIST SHALL HAVE ALL JOISTS BOLTED TO THE SUPPORT AT EACH END.

4. FOR THE THREE JOISTS NEAREST EACH COLUMN, THE BOTTOM CHORDS SHALL BE EXTENDED. BOTTOM CHORD EXTENSION CONNECTIONS SHALL NOT BE MADE UNTIL AFTER THE FULL DEAD LOAD IS APPLIED. A 6 INCH x 6 INCH STABILIZER PLATE SHALL BE PROVIDED IN ORDER TO RECEIVE THE JOIST BOTTOM CHORDS AT ALL COLUMN LOCATIONS. THE PLATE SHALL EXTEND A MINIMUM OF 3" BELOW THE BOTTOM OF THE BOTTOM CHORDS. PROVIDE A 13/16" DIAMETER HOLE IN THE STABILIZER PLATE FOR GUYING CABLES.

5. JOISTS THAT REQUIRE REPAIRS OR MODIFICATIONS DUE TO FABRICATION ERRORS OR TO DAMAGES CAUSED DURING THE SHIPPING PROCESS, SHALL BE REPLACED WITH NEW JOISTS.

6. ALL STEEL JOISTS AND JOIST GIRDERS SHALL BE DESIGNED UNDER THE DIRECT SUPERVISION OF A STRUCTURAL ENGINEER REGISTERED IN THE STATE WHERE THE PROJECT IS LOCATED.

7. PROVIDE STANDARD DEPTH OF BEARING FOR ALL JOISTS AS SHOWN BELOW UNLESS NOTED OTHERWISE ON THE DRAWING OR DICTATED BY JOIST SLOPE:
   A. ALL K SERIES: 2 1/2" DEEP
   B. LH SERIES WITH JOIST SECTION NUMBER LESS THAN 18: 5" DEEP
   C. ALL DLH SERIES JOIST AND LH SERIES JOIST WITH SECTION NUMBER GREATER THAN 18: 7 1/2" DEEP
   D. WHERE JOISTS WITH DIFFERENT SEAT DEPTHS BUT THE SAME TOP OF JOIST ELEVATION BEAR ON THE SAME SUPPORTING ELEMENT, PROVIDE THE DEEPER JOIST SEAT FOR ALL JOIST BEARING ON THAT ELEMENT UNLESS SPECIFICALLY DETAILED OTHERWISE IN THE CONTRACT DOCUMENTS.

8. UNLESS INDICATED OTHERWISE IN THE CONTRACT DOCUMENTS, WELD ALL JOIST SEATS TO THE SUPPORTING STRUCTURAL STEEL OR TO BEARING PLATES IN CONCRETE OR MASONRY AS FOLLOWS:
   A. K-SERIES JOISTS: 2 1/2 INCH LONG FILLET WELDS EACH SIDE OF JOIST SEAT WITH A THICKNESS EQUAL TO THE STEEL THICKNESS OF THE JOIST SEAT. (1/8" FILLET WELD MINIMUM)
   B. LH & DLH-SERIES JOISTS: 2 1/2 INCH LONG FILLET WELDS FOR JOIST SECTIONS NUMBER 02 THROUGH 17 AND 4 INCH LONG FILLET WELDS FOR JOIST SECTIONS NUMBER 18 THROUGH 25 EACH SIDE OF JOIST SEAT WITH A THICKNESS EQUAL TO THE STEEL THICKNESS OF THE JOIST SEAT. (3/16" FILLET WELD MINIMUM FOR JOISTS WITH SECTION NUMBER LESS THAN 07 AND 1/4" FILLET WELD MINIMUM FOR JOISTS WITH SECTION NUMBER 07 THROUGH 25).
   C. IN ADDITION TO THE WELDED CONNECTION FOR ALL JOISTS, PROVIDE AN ADDITIONAL BOLTED CONNECTION AT JOISTS WHERE REQUIRED BY OSHA STANDARDS OR THE STEEL JOIST INSTITUTE'S STANDARD SPECIFICATIONS.

9. WHERE JOISTS BEAR ON ONE SIDE OF A MASONRY WALL, JOIST SEATS SHALL BE OF SUFFICIENT DEPTH THAT WILL ALLOW THE JOIST REACTION TO ALIGN ON THE CENTER OF THE MASONRY WALL.

10. HANGERS SUPPORTING MECHANICAL EQUIPMENT, SPRINKLER LINES, ETC., FROM THE CHORD OF STEEL JOISTS, SHALL BE LOCATED AT THE PANEL POINTS OF THE JOISTS OR THE JOIST CHORD SHALL BE REINFORCED TO SUPPORT THE ADDITIONAL LOAD, EXCEPT AS FOLLOWS. HANGERS SUPPORTING LESS THAN 50 POUNDS FROM THE BOTTOM CHORD OR 150 POUNDS FROM THE TOP CHORD DO NOT HAVE TO BE PLACED AT PANEL POINTS. DO NOT SUSPEND ANYTHING FROM JOIST BRIDGING.

11. PROVIDE JOIST BRIDGING IN COMPLIANCE WITH THE CURRENT EDITION OF THE STEEL JOIST INSTITUTE'S STANDARD SPECIFICATIONS, UNLESS A MORE STRINGENT REQUIREMENT FOR BRIDGING IS REQUIRED BY THE CONTRACT DOCUMENTS.
   A. WHERE THE SPECIFIED WIND UPLIFT LOAD (REF GENERAL NOTES) RESULTS IN COMPRESSION IN THE JOIST BOTTOM CHORD, PROVIDE ADDITIONAL BRIDGING AS REQUIRED TO BRACE THE BOTTOM CHORD.
   B. WHERE JOISTS ARE EXPOSED, CONTRACTOR SHALL COORDINATE BRIDGING WITH REQUIREMENTS OF OTHER TRADES SUCH AS MECHANICAL DUCTS, LIGHTING, ETC. IF NECESSARY FOR COORDINATION WITH OTHER TRADES, PROVIDE ADDITIONAL ROWS OF BRIDGING ABOVE THE MINIMUM REQUIREMENTS OF THE STEEL JOIST INSTITUTE'S STANDARD SPECIFICATIONS.
   C. AT LOCATIONS WHERE BOTTOM CHORD HORIZONTAL BRIDGING IS DISCONTINUED FOR ONE JOIST SPACING FOR ANY REASON, PROVIDE DIAGONAL BRIDGING BETWEEN ADJACENT TWO JOISTS ON EACH SIDE.

12. SEE ROOF PLANS FOR JOIST TOP CHORDS TO BE DESIGNED AS DRAG STRUTS FOR HORIZONTAL FORCES (NOTED H = _____ KIPS) IN COMBINATION WITH GRAVITY LOADS. THIS FORCE MAY BE EITHER COMPRESSION OR TENSION. STRESSES MAY NOT BE INCREASED FOR WIND.

13. IF BEAM FLANGES ARE NOT WIDE ENOUGH TO ACCOMMODATE BEARING SEATS FROM BOTH SIDES, JOISTS MAY BE OFFSET AND SEATS OVERLAPPED. CONTRACTOR TO COORDINATE DECK LAYOUT SO END LAPS ALWAYS OCCUR OVER JOISTS. JOISTS ON COLUMN LINES MUST STILL BRACE COLUMNS WITH EXTENDED BOTTOM CHORDS.

14. WHERE JOIST TOP CHORD EXTENSIONS ARE INDICATED, DESIGN THE EXTENSION FOR A CONCENTRATED DEAD LOAD AT THE END OF 150 POUNDS AND A UNIFORM LOAD EQUAL TO THE TOTAL LOAD CAPACITY PROVIDED IN THE SJI LOAD TABLES FOR THE JOISTS SPECIFIED ON THE FRAMING PLANS WITH THE EXTENSIONS. SIZE EXTENSIONS TO LIMIT DEFLECTION TO THE LESSER OF 3/8" OR L/180 FOR LIVE LOAD OR L/120 FOR TOTAL LOAD, WHERE "L" IS THE LENGTH OF THE EXTENSION.

15. STEEL JOISTS, BRIDGING, AND THEIR CONNECTIONS SHALL BE DESIGNED FOR A NET UPLIFT EQUAL TO THE UPWARD COMPONENT AND CLADDING WIND PRESSURES SHOWN ON THE STRUCTURAL DRAWINGS MINUS 3 PSF OF DEAD LOAD (0.6D). STEEL JOISTS, BRIDGING, AND THEIR CONNECTIONS SHALL ALSO BE DESIGNED FOR AN ADDITIONAL DOWN WIND FORCE RESULTING FROM POSITIVE WIND ROOF COMPONENTS AND CLADDING PRESSURE AS SHOWN ON THE STRUCTURAL DRAWINGS. DOWN FORCE WIND LOADING IN COMBINATION WITH DEAD AND LIVE LOADS MAY CONTROL THE DESIGN OF THESE ELEMENTS.

16. PROVIDE ALL NECESSARY ERECTION BOLTS, STABILIZER PLATES, BOTTOM CHORD CONNECTIONS, ERECTION BRIDGING, ETC., IN COMPLIANCE WITH OSHA REGULATIONS GOVERNING SAFETY IN THE WORKPLACE. CONNECTION DETAILS SHOWN ARE ADEQUATE FOR FINAL IN PLACE CONDITIONS AND DO NOT NECESSARILY PROVIDE FOR CONSTRUCTION SAFETY.

17. ALL STEEL SHALL BE DOMESTICALLY (INCLUDING CANADA) MILLED AND FABRICATED. FOREIGN STEEL SHALL NOT BE UTILIZED WITH OUT PRIOR APPROVAL FROM THE STRUCTURAL ENGINEER. THE APPROVAL PROCESS SHALL TAKE PLACE DURING BIDDING TIME. ANY REQUEST TO UTILIZE FOREIGN STEEL MADE AFTER BIDDING SHALL BE REJECTED.

18. OPEN WEB STEEL JOIST SUPPLIER IS TO SUBMIT SHOP DRAWINGS PREPARED UNDER THE SUPERVISION OF A LICENSED ENGINEER IN THE STATE IN WHICH THE PROJECT IS BEING PERFORMED TO THE ARCHITECT/ENGINEER FOR REVIEW FOR GENERAL CONFORMANCE WITH THE CONTRACT DOCUMENTS. SEE THE SPECIFICATIONS FOR OTHER SUBMITTAL REQUIREMENTS.

19. FOR OPEN WEB JOISTS, SOME U.L. RATINGS REQUIRE SPECIAL SIZES. THE JOIST MANUFACTURER SHALL VERIFY AND RE-DESIGN ANY/ALL JOISTS AS REQUIRED, TO MEET THE U.L. FIRE RESISTANCE DIRECTORY.

20. GENERAL RTU WEIGHTS AND LOCATIONS ARE PROVIDED IN THE CONTRACT DOCUMENTS. THE JOIST SIZES DESIGNATED ON THE FRAMING PLAN AND THE JOIST GIRDER PANEL POINT LOADS DO NOT TAKE INTO ACCOUNT THE RTU WEIGHTS. THE JOIST MANUFACTURER SHALL DESIGN SPECIAL JOISTS TO SUPPORT THE WEIGHT OF THE RTU'S IN ADDITION TO THE TOTAL LOAD CAPACITY PROVIDED IN THE SJI LOAD TABLES FOR THE JOISTS SPECIFIED ON THE FRAMING PLANS AT THE RTU LOCATIONS. JOISTS SUPPORTING RTU'S SHALL BE FABRICATED SYMMETRICALLY ABOUT THEIR CENTERLINE. THE RTU WEIGHTS SHALL ALSO BE ADDED TO THE JOIST GIRDER PANEL POINT LOADS PROVIDED IN THE DRAWINGS. THE CONTRACTOR SHALL COORDINATE THE FINAL RTU LOCATIONS, WEIGHTS AND SIZES WITH THE JOIST MANUFACTURER AND NOTIFY THE ENGINEER OF ANY CHANGES FROM WHAT IS INDICATED IN THE CONTRACT DOCUMENTS. ROOF MOUNTED MECHANICAL UNIT LOCATIONS ARE SHOWN ON THE ROOF FRAMING PLANS. PROVIDE ADDITIONAL STEEL FRAMING, AS DETAILED, FOR SUPPORT OF RTU CURBS AND PROVIDE DECK SUPPORT ANGLES AT ALL ROOF OPENINGS.

21. UNLESS INDICATED OTHERWISE, THE JOIST SIZES DESIGNATED ON THE FRAMING PLANS AND THE JOIST GIRDER PANEL POINT LOADS DO NOT TAKE INTO ACCOUNT THE WEIGHT OF VARIOUS ITEMS SUCH AS, BUT NOT LIMITED TO, OPERABLE PARTITIONS, BASKETBALL GOALS, SCORE BOARDS, MECHANICAL EQUIPMENT, MECHANICAL EQUIPMENT SUPPLY AND RETURN PIPING, ELECTRICAL EQUIPMENT, ETC. THE MANUFACTURER SHALL DESIGN SPECIAL JOISTS TO SUPPORT THE WEIGHT OF THESE ITEMS IN ADDITION TO THE TOTAL LOAD CAPACITY PROVIDED IN THE SJI LOAD TABLES FOR THE JOISTS SPECIFIED ON THE FRAMING PLANS AT THE LOCATION OF THESE ITEMS. JOISTS SUPPORTING THESE ITEMS SHALL BE FABRICATED SYMMETRICALLY ABOUT THEIR CENTERLINE. THE ITEM WEIGHTS SHALL ALSO BE ADDED TO THE JOIST GIRDER PANEL POINT LOADS PROVIDED IN THE DRAWINGS. THE CONTRACTOR SHALL COORDINATE THE FINAL LOCATION OF THESE ITEMS, AND THEIR WEIGHTS AND SIZES WITH THE JOIST MANUFACTURER AND NOTIFY THE ENGINEER OF ANY CHANGES FROM WHAT IS INDICATED ON THE FRAMING PLANS.

22. THE JOIST DESIGNATED ON THE FRAMING PLANS AND THE JOIST GIRDER PANEL POINT LOADS DO NOT TAKE INTO ACCOUNT THE COLUMN LOADS ASSOCIATED WITH THE ROOF SCREENS INDICATED IN THE CONTRACT DOCUMENTS. THE JOIST MANUFACTURER SHALL DESIGN SPECIAL JOISTS AND JOIST GIRDERS TO SUPPORT THE CONCENTRATED LOADS AND MOMENTS INDICATED IN THE ROOF SCREEN DETAILS AT EACH ROOF SCREEN COLUMN IN ADDITION TO THE TOTAL LOAD CAPACITY PROVIDED IN THE SJI LOAD TABLES FOR THE JOISTS SPECIFIED ON THE FRAMING PLANS AT THE ROOF SCREEN COLUMN LOCATIONS. JOISTS SUPPORTING ROOF SCREEN COLUMNS SHALL BE FABRICATED SYMMETRICALLY ABOUT THEIR CENTERLINE. THE ROOF SCREEN COLUMN LOADS SHALL ALSO BE ADDED TO THE JOIST GIRDER PANEL POINT LOADS PROVIDED IN THE DRAWINGS. THE CONTRACTOR SHALL COORDINATE THE FINAL ROOF SCREEN COLUMN LOCATIONS WITH THE JOIST MANUFACTURER AND NOTIFY THE ENGINEER OF ANY CHANGES FROM WHAT IS INDICATED ON THE FRAMING PLANS.

23. IN ADDITION TO AND SIMULTANEOUSLY WITH OTHER SPECIFIED LOADS, DESIGN JOISTS AND JOIST GIRDERS FOR THE FOLLOWING CONCENTRATED LOADS:
   A. DESIGN JOISTS AND JOIST GIRDERS FOR A CONCENTRATED LOAD AND ANY OTHER SPECIFIED LOADS AT ANY ONE TOP OR BOTTOM CHORD PANEL POINT AS FOLLOWS:
      1. FLOOR AND ROOF JOISTS: 300 POUNDS
      2. FLOOR AND ROOF JOIST GIRDERS: 500 POUNDS
   B. DESIGN CHORDS FOR SHEARS AND MOMENTS INDUCED IN THE CHORDS AS A RESULT OF ALL OR A PORTION OF THESE CONCENTRATED LOADS AND ANY OTHER SPECIFIED LOADS BEING LOCATED AT ANY POINT BETWEEN ANY TWO ADJACENT PANEL POINTS AS FOLLOW:
      1. FLOOR AND ROOF JOISTS:
         a. TOP CHORD: 300 POUNDS
         b. BOTTOM CHORD: 50 POUNDS
      2. FLOOR AND ROOF JOIST GIRDERS:
         a. TOP CHORD: 500 POUNDS
         b. BOTTOM CHORD: 500 POUNDS
   C. ALL LOADS HANGING FROM THE JOIST BOTTOM CHORD SHALL BE CENTERED ON THE JOIST CHORD AND ATTACHED TO ALL ELEMENTS OF MULTI-ELEMENT BOTTOM CHORDS. CLAMP TYPE HANGERS ARE NOT ALLOWED UNLESS SPECIFICALLY AUTHORIZED BY THE JOIST MANUFACTURER'S ENGINEER.

24. UNLESS INDICTED OTHERWISE, SPECIAL JOISTS SUPPORTING OPERABLE PARTITIONS SHALL BE DESIGNED FOR A MAXIMUM DEFLECTIONS DUE TO THE LIVE LOAD AND OPERABLE PARTITION WEIGHT OF L/360. HOWEVER, THE CONTRACTOR SHALL COORDINATE WITH THE SELECTED OPERABLE PARTITION MANUFACTURER TO DETERMINE IF A MORE RESTRICTIVE DEFLECTION LIMIT IS REQUIRED BY THE MANUFACTURER FOR INSTALLATION PURPOSES AND TO MAINTAIN PROPER OPERATION OF THE PARTITION.

25. THE FRAMING PLANS AND DETAILS IN THE CONTRACT DRAWINGS MAY SHOW THE JOIST ALIGNED IN ADJACENT SPANS WITH BUTTED SEATS. IF THE SUPPORTING STEEL BEAM OR EMBEDDED BEARING PLATE IN THE CONCRETE/MASONRY WALL IS NOT WIDE ENOUGH TO ALLOW BUTTED SEATS AND MEET THE MINIMUM STEEL JOIST INSTITUTE SPECIFICATIONS FOR MINIMUM BEARING LENGTH, THEN THE SEATS SHALL BE LAPPED. THE CONTRACTOR SHALL COORDINATE THE FINAL JOIST LOCATIONS AND THE METAL DECK SPANS.

26. THE JOIST DEPTH AT THE ENDS OF JOIST DESIGNATED AS DOUBLE OR TRIPLE PITCHED SHALL BE THE DEPTH SPECIFIED ON THE FRAMING PLANS. THE DEPTH AT THE RIDGE OF THESE JOIST SHALL BE THE SPECIFIED DEPTH PLUS THE CHANGE IN TOP OF STEEL ELEVATION BETWEEN THE END OF THE JOIST AND THE RIDGE.

METAL ROOF DECKING:

1. METAL ROOF DECK OF SIZE NOTED ON PLANS SHALL HAVE THE FOLLOWING MINIMUM PROPERTIES:

METAL DECK SCHEDULE

DECK DESIGNATION	DECK GAUGE	SDI DECK TYPE	DECK DEPTH (IN)	Ie+ (IN4)	Ie- (IN4)	Se+ (IN3)	Se- (IN3)	Fy (KSI)
1.0 CSV	20	CONFORM	0.9375	0.088	0.088	0.167	0.165	60
1.5 B	20	WIDE RIB	1.5	0.201	0.201	0.234	0.247	50
1.5 BA	22	WIDE RIB ACOUSTICAL	1.5	0.148	0.169	0.161	0.170	50
1.5 BPA	20 GA HAT 18 GA PAN	CELLULAR ACOUSTICAL	1.5	0.414	0.315	0.277	0.259	50
3N	20	DEEP RIB	3.0	0.901	1.071	0.482	0.530	40
3NA	20	DEEP RIB ACOUSTICAL	3.0	0.856	1.017	0.458	0.503	40
3NP	18 GA HAT 20 GA PAN	DEEP RIB CELLULAR	3.0	2.246	1.774	0.821	0.707	40
3NPA	18 GA HAT 20 GA PAN	CELLULAR ACOUSTICAL	3.0	2.151	1.773	0.809	0.707	40

METAL DECK CONNECTION SCHEDULE

FASTEN DECK TO SUPPORT MEMBERS: ATTACHMENT PATTERN (W/N)	FASTEN DECK TO SUPPORT MEMBERS: SUPPORT FASTENERS	SIDELAP FASTENERS
36/6	5/8" PUDDLE WELD	6#10 TEK SCREWS
36/7	5/8" PUDDLE WELD	6#10 TEK SCREWS
36/7	5/8" PUDDLE WELD	6#10 TEK SCREWS
36/7	5/8" PUDDLE WELD	6#10 TEK SCREWS
24/4	3/4" PUDDLE WELD	(9) - 1" FILLET WELDS
24/4	3/4" PUDDLE WELD	(9) - 1" FILLET WELDS
24/4	3/4" PUDDLE WELD	(9) - 1" FILLET WELDS
24/4	3/4" PUDDLE WELD	(9) - 1" FILLET WELDS

Ie+: POSITIVE EFFECTIVE MOMENT OF INERTIA
Ie-: NEGATIVE EFFECTIVE MOMENT OF INERTIA
Se+: POSITIVE EFFECTIVE SECTION MODULUS
Se-: NEGATIVE EFFECTIVE SECTION MODULUS
FY:YIELD STRENGTH
W/N: SHEET WIDTH / NUMBER OF CONNECTIONS EACH SHEET

2. SEE ROOF FRAMING PLAN FOR ROOF DECK SIZES.

3. THE METAL ROOF DECK ON THIS PROJECT IS REQUIRED TO PERFORM AS A STRUCTURAL DIAPHRAGM, ALL WELDS AND SCREWS ARE CRITICAL TO THE SUCCESSFUL PERFORMANCE OF THE DIAPHRAGM.

4. STEEL ROOF DECK (WITH RIGID INSULATION BOARD):
   4.1. ROOF DECK SHALL BE 1 1/2" DEEP, 20 GAGE, WIDE RIB, TYPE B DECK CONFORMING TO ASTM A611 OR A653-99 WITH Fy=33 KSI. DECK SHALL BE GALVANIZED, CONFORMING TO ASTM A924, WITH A MINIMUM ZINC COATING CLASS OF G90 PER ASTM A653-99. DECK SHALL HAVE A MINIMUM MOMENT OF INERTIA OF 0.155 INCH TO THE FOURTH PER FOOT OF WIDTH. FASTEN SIDELAPS WITH #10 TEK SCREWS; ONE AT MIDSPAN OR 3'-0" ON CENTER MAX. WELD DECK THROUGH 5/8" DIAMETER PUDDLE WELDS TO EACH STRUCTURAL SUPPORTING MEMBER AT 1'-0" ON CENTER AT END LAPS AND AT INTERMEDIATE SUPPORTS. AT SPANDREL BEAMS AND DECK SUPPORT ANGLES, AND FOR A 10'-0" SQUARE AREA AT ROOF CORNERS, THE DECK SHALL BE WELDED TO ALL SUPPORTS AT 6" ON CENTER.

4. STEEL ROOF DECK (WITH LIGHTWEIGHT INSULATION FILL):
   4.1. LIGHTWEIGHT INSULATION CONCRETE FILL USED OVER ROOF DECKING SHALL HAVE A MIX RATIO OF ONE SACK PORTLAND CEMENT TO SIX CUBIC FEET OF LIGHTWEIGHT CONCRETE AGGREGATE. PERLITE OR VERMICULITE AGGREGATE MUST CONFORM TO ASTM C332. PERLITE SHALL HAVE A MAXIMUM WET DENSITY OF 42 POUNDS PER CUBIC FOOT (PCF). AND VERMICULITE SHALL HAVE A MAXIMUM WET DENSITY OF 60 PCF AT THE POINT OF DISCHARGE. BOTH SHALL HAVE A MAX DRY DENSITY OF 32 PCF, AND MUST HAVE A COMPRESSIVE STRENGTH (fc) OF 300 PSI IN 28 DAYS.
   4.2. ROOF DECK SHALL BE CORRUGATED DECK CONFORMING TO ASTM A611 OR A653-99 WITH Fy=60 KSI. DECK SHALL BE GALVANIZED, CONFORMING TO ASTM A924, WITH A MINIMUM ZINC COATING CLASS OF G90 PER ASTM A653-99. DECK SHALL BE 20 GAGE METAL FORMS, 1" DEEP WITH VENTING SLOTS IN VALLEY OF EACH CORRUGATION. DECK SHALL HAVE A MINIMUM SECTION MODULUS OF 0.130 INCHES CUBED PER FOOT OF WIDTH. FASTEN SIDELAPS WITH #10 TEK SCREWS. WELD DECK TO EACH STRUCTURAL SUPPORTING MEMBER AT EVERY OTHER CORRUGATION AT END LAPS AND AT INTERMEDIATE SUPPORTS. AT SPANDREL BEAMS AND DECK SUPPORT ANGLES, AND FOR A 20'-0" SQUARE AREA AT ROOF CORNERS, THE DECK SHALL BE WELDED TO ALL SUPPORTS AT EVERY CORRUGATION OR 6" ON CENTER MAXIMUM.
   4.3. THE THICKNESS OF THE LIGHTWEIGHT CONCRETE FILL SHALL BE AS SPECIFIED BY THE ARCHITECT. HOWEVER, THE THICKNESS SHALL NOT EXCEED 2.5 INCHES. ROOF SLOPES THAT ARE NOT REFLECTED IN THE SLOPE OF THE STRUCTURAL FRAMING, SUCH AS AT SMALL AREAS, CRICKET AND THE EDGES OF THE ROOF, SHALL BE IMPLEMENTED BY VARYING THE INSULATION THICKNESS IN LIEU OF VARYING THE THICKNESS OF THE LIGHTWEIGHT CONCRETE FILL. DO NOT EXCEED THE MAXIMUM SPECIFIED THICKNESS OF LIGHTWEIGHT CONCRETE FILL.

5. THE STEEL DECK SHALL ALWAYS BE INSTALLED WITH THE DIRECTION OF FLUTES PERPENDICULAR TO THE FRAMING MEMBERS. THE DECK SHALL BE CUT TO ENSURE A MINIMUM OF THREE SPANS PER DECK WIDTH.

6. IN ADDITION TO THE DECK CONNECTIONS INDICATED IN THE CONNECTION SCHEDULE, THE DECK SHALL BE CONNECTED AT EACH FLUTE AT EACH SUPPORT WITHIN THE FIRST 10 FEET FROM THE BUILDING PERIMETER.

7. ROOF DECK SHALL BE CONTINUOUS OVER FOUR OR MORE SUPPORTS. AT LOCATIONS WHERE SINGLE OR DOUBLE SPAN CONDITIONS OCCUR, THE CONTRACTOR SHALL EITHER SHORE THE DECK, OR ADJUST THE GAGE THICKNESS OF THE DECK IN ACCORDANCE WITH THE MANUFACTURER'S RECOMMENDATIONS. DECK SHALL BE DESIGNED TO PROVIDE EQUIVALENT OR GREATER LOAD CAPACITY AS THE SPECIFIED DECK SUPPORT OVER FOUR SUPPORTS.

8. COORDINATE METAL DECK LENGTHS WITH THE FINAL JOIST AND BEAM LAYOUT. THE FINAL JOIST AND BEAM LAYOUT CAN BE DIFFERENT THAN THAT SHOWN IN THE CONTRACT DRAWINGS DEPENDING ON WHETHER THE JOIST BEARING SEATS ARE BUTTED OR LAPPED. THE JOIST LOCATIONS SHOWN IN THE CONTRACT DRAWINGS DO NOT ACCOUNT FOR THE SMALL DIFFERENCE IN JOIST LOCATION DUE TO THE VARIOUS JOIST BEARING CONDITIONS THAT COULD EXIST IN THE FIELD.

9. SUSPENDED CEILING, LIGHT FIXTURES, DUCTS OR OTHER UTILITIES SHALL NOT BE SUPPORTED BY THE STEEL DECK.

10. ACOUSTICAL "DOVETAIL" METAL ROOF DECK SHALL BE MANUFACTURED BY EPIC METALS CORPORATION (EPICORE) OR CSI METAL DECK GROUP (VERSA DECK). REFER TO THE ROOF FRAMING PLAN FOR DECK TYPE AND LOCATION.

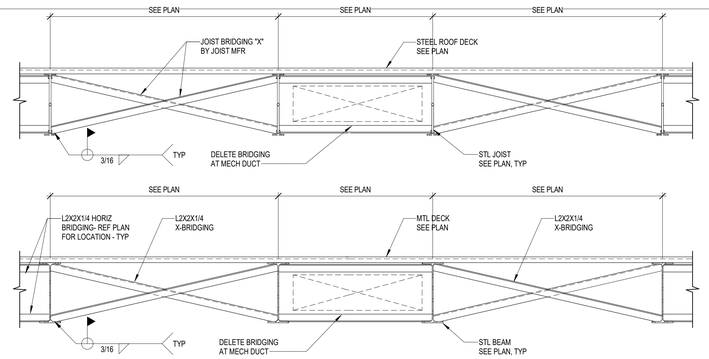

1 TYPICAL BRIDGING
NO SCALE

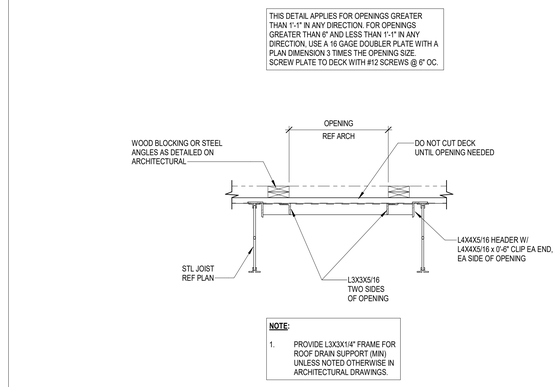

2 TYPICAL ROOF OPENING DETAIL
NO SCALE

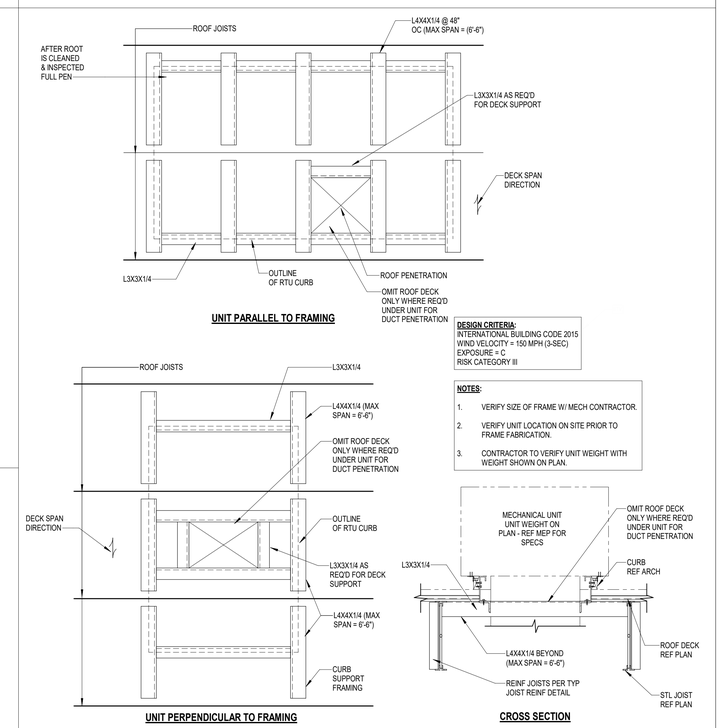

5 TYPICAL SUPPORT AT MECHANICAL UNIT DETAIL
NO SCALE

PURLIN SPAN LENGTH (FEET)	# OF ROWS OF BRIDGING	BRIDGING ANGLE SIZE
LESS THAN 10'-0"	- 0 -	L2X2X1/4"
10'-0" - 15'-0"	- 1 -	L2X2X1/4"
15'-0" - 20'-0"	- 1 -	L2X2X1/4"
20'-0" - 25'-0"	- 2 -	L2X2X1/4"
25'-0" - 30'-0"	- 2 -	L2X2X1/4"
30'-0" - 35'-0"	- 2 -	L2X2X1/4"
35'-0" - 40'-0"	- 3 -	L3X3X1/4"
40'-0" - 45'-0"	- 4 -	L3X3X1/4"
45'-0" - 50'-0"	- 4 -	L3X3X1/4"
50'-0" - 55'-0"	- 4 -	L3X3X1/4"
55'-0" - 60'-0"	- 4 -	L3X3X1/4"
60'-0" - 65'-0"	- 4 -	L3X3X1/4"

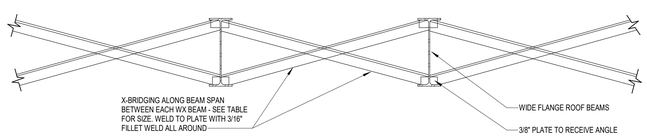

3 TYPICAL UPLIFT BRIDGING DETAIL
3/4" = 1'-0"

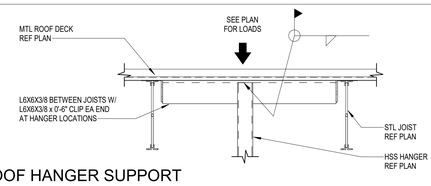

6 DETAIL AT ROOF HANGER SUPPORT
NO SCALE

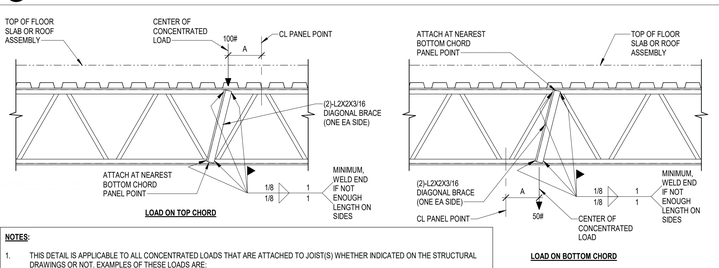

NOTES:
1. THIS DETAIL IS APPLICABLE TO ALL CONCENTRATED LOADS THAT ARE ATTACHED TO JOIST(S) WHETHER INDICATED ON THE STRUCTURAL DRAWINGS OR NOT. EXAMPLES OF THESE LOADS ARE:
   a. HANGING LOAD. PARTITION THAT EXCEEDS 150#
   b. HANG

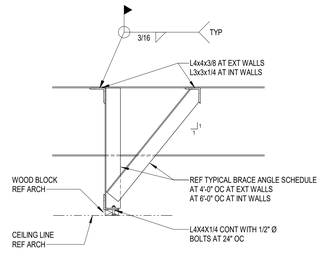

WINDOW OR WALL HEAD BRACING
PERPENDICULAR TO BEAMS

DECK NOT SHOWN FOR CLARITY

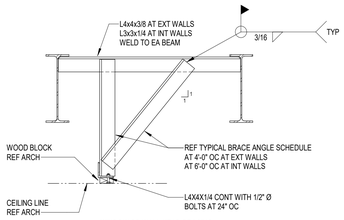

WINDOW OR WALL HEAD BRACING
PARALLEL TO BEAMS

1 TYPICAL WINDOW OR WALL HEAD BRACING AT BEAMS
NO SCALE

NOTE:
DESIGN JOISTS FOR ADDTIONAL DEAD LOAD = 1.2 KIPS

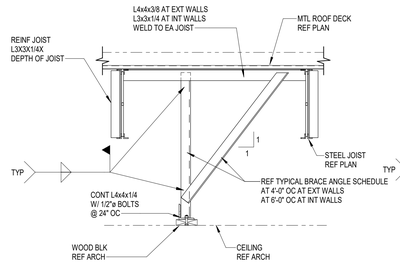

NOTE:
DESIGN JOISTS FOR ADDTIONAL DEAD LOAD = 0.25 KLF

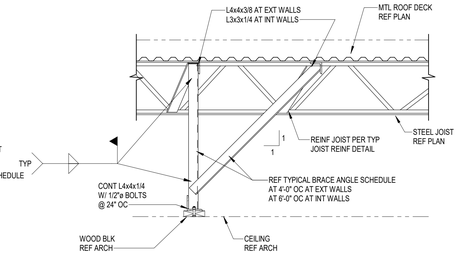

2 TYPICAL WINDOW OR WALL HEAD BRACING AT JOISTS
NO SCALE

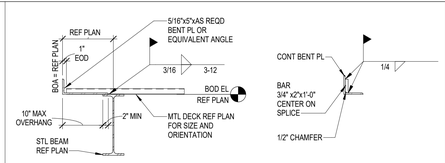

ROOF EDGE OVERHANG ≤10"

TYPICAL ROOF BENT PLATE
SPLICE CONNECTION

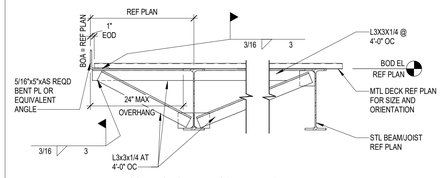

ROOF EDGE OVERHANG > 10" AND < 24"

3 TYPICAL ROOF EDGE DETAIL
3/4" = 1'-0"

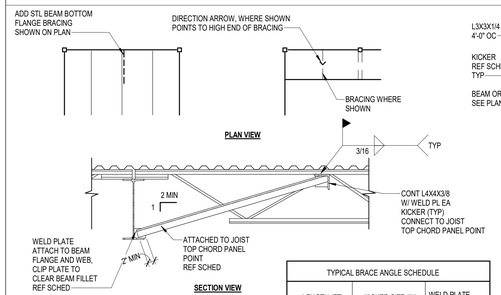

TYPICAL BRACE ANGLE SCHEDULE		
LENGTH (FT)	KICKER SIZE (IN)	WELD PLATE SIZE (IN)
UP TO 3'-0"	L2-1/2X2-1/2X3/16	PL 4x4x3/8
3'-0" TO 8'-0"	L3 x 3 x 1/4	PL 4x4x3/8
8'-0" TO 12'-0"	L4 x 4x 1/4	PL 5X5X3/8
12'-0" TO 16'-0"	L5 x 5x 5/16	PL 6x6x3/8

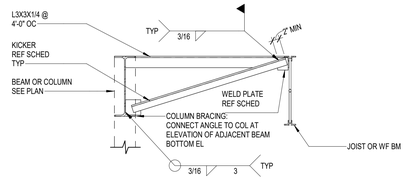

SECTION VIEW

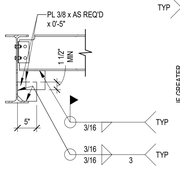

SECTION VIEW

SECTION VIEW

4 TYPICAL BEAM/JOIST BOTTOM FLANGE BRACE
NO SCALE

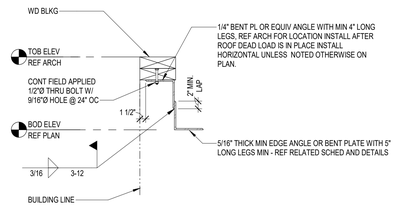

5 TYPICAL ROOF EDGE ANGLE
3/4" = 1'-0"

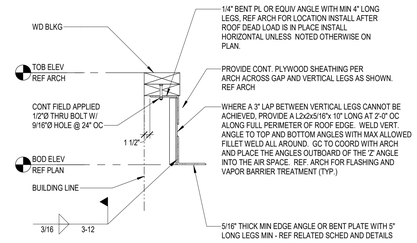

6 TYPICAL ROOF EDGE ANGLE
3/4" = 1'-0"

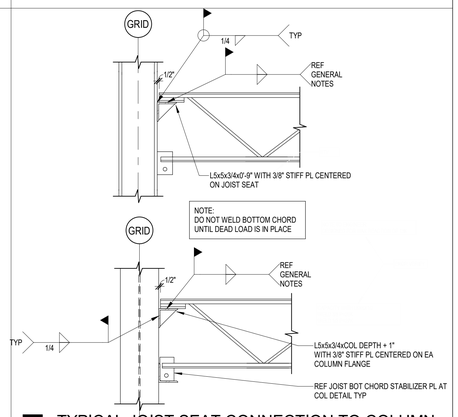

7 TYPICAL JOIST SEAT CONNECTION TO COLUMN
3/4" = 1'-0"

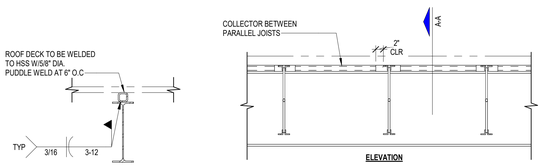

SECTION A-A

ELEVATION

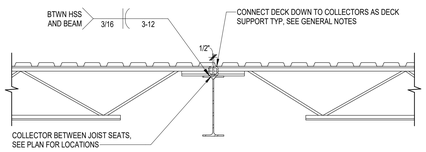

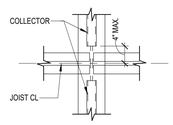

PLAN VIEW

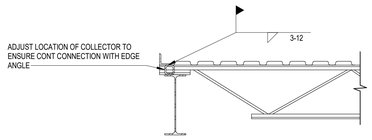

ELEVATION

NOTES:
1. PROVIDE HSS BETWEEN JOIST SEATS AT WIND BRACING BEAMS, MOMENT FRAME BEAMS AND COLLECTOR BEAMS WITH "H" FORCE SPECIFIED AT END OF THE BEAM PLAN.
2. JOISTS SHALL BE STAGGERED WHERE MINIMUM BEARING LENGTHS CANNOT BE MET DUE TO FLANGE WIDTH. MAXIMUM JOIST SPACING SPECIFIED ON PLAN SHALL NOT BE EXCEEDED.
3. IF JOIST SEAT DEPTHS ARE DIFFERENT AT THE BEAM, USE DEEPER JOIST SEAT FOR BOTH JOISTS

JOIST SEAT DEPTH	COLLECTOR SIZE
2 1/2	HSS 2 1/2 x 2 1/2 x 1/4
3	HSS 3 x 3 x 1/4
3 1/2	HSS 3 1/2 x 2 1/2 x 1/4
4	HSS 4 x 4 x 1/4
5	HSS 5X3X1/4
6	C 6 x 8.2
8	C 8 x 11.5

8 TYPICAL DIAPHRAGM SHEAR COLLECTOR AT STEEL BEAM
NO SCALE

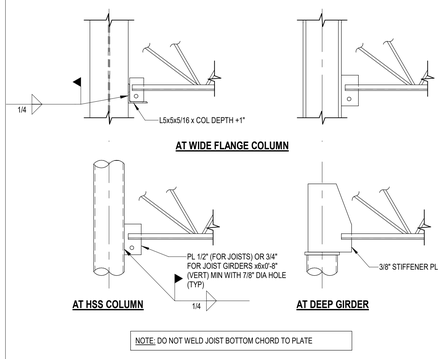

NOTE: DO NOT WELD JOIST BOTTOM CHORD TO PLATE

9 TYPICAL JOIST/JOIST GIRDER BOTTOM CHORD STABILIZER PLATE AT COLUMN
3/4" = 1'-0"

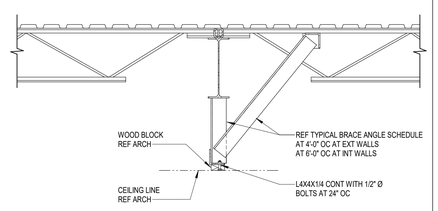

10 TYPICAL INTERIOR FRAMING DETAIL
NO SCALE

NOTES:
1. JOISTS SHALL BE STAGGERED WHERE MINIMUM BEARING LENGTHS CANNOT BE MET DUE TO FLANGE WIDTH. MAXIMUM JOIST SPACING SPECIFIED ON PLAN SHALL NOT BE EXCEEDED.
2. SEE TYP BEAM/JOIST BOTTOM FLANGE DETAIL FOR INFO NOT SHOWN HERE.

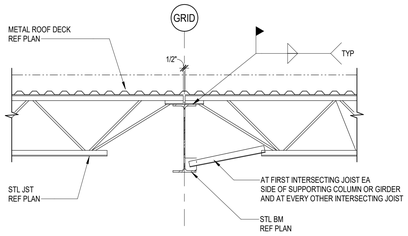

11 TYPICAL INTERIOR DETAIL AT K JOIST BEARING
NO SCALE

NOTES:
1. JOISTS SHALL BE STAGGERED WHERE MINIMUM BEARING LENGTHS CANNOT BE MET DUE TO FLANGE WIDTH. MAXIMUM JOIST SPACING SPECIFIED ON PLAN SHALL NOT BE EXCEEDED.
2. SEE TYP BEAM/JOIST BOTTOM FLANGE DETAIL FOR INFO NOT SHOWN HERE.

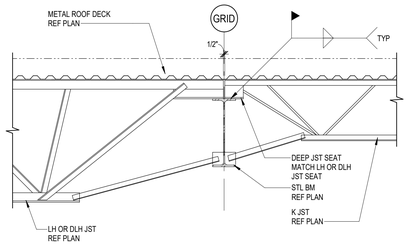

12 TYPICAL INTERIOR DETAIL AT LH AND DLH JOIST BEARING
NO SCALE

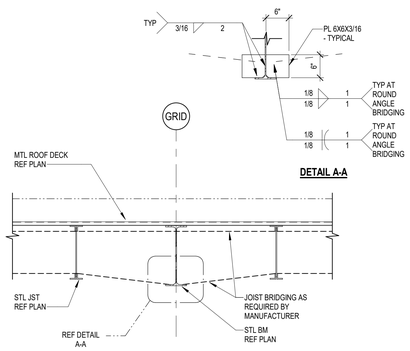

13 TYPICAL JOIST BRIDGING CONNECTION TO INTERIOR STEEL BEAM
NO SCALE

NOTES:
1. JOISTS SHALL BE STAGGERED WHERE MINIMUM BEARING LENGTHS CANNOT BE MET DUE TO FLANGE WIDTH. MAXIMUM JOIST SPACING SPECIFIED ON PLAN SHALL NOT BE EXCEEDED.
2. SEE TYP BEAM/JOIST BOTTOM FLANGE DETAIL FOR INFO NOT SHOWN HERE.

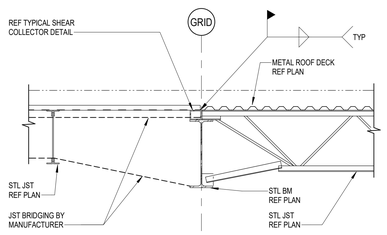

14 TYPICAL CHANGE IN DECK DIRECTION AT STEEL BEAM
NO SCALE

JOIST MFR DESIGN EXTENSION
FOR THE FOLLOWING LOADS
UNLESS EXTENSION SIZE NOTED ON PLAN:

DEAD & LIVE LOAD: REFER TO STEEL JOIST
FRAMING GENERAL NOTES

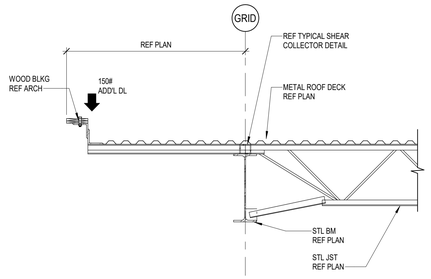

15 TYPICAL ROOF JOIST EXTENTION
NO SCALE

Kubala ENGINEERS
Ph: (800)246-3674
www.kubalaengineers.com
TX. REG. NO. F-23612

PBK
www.pbk.com
TX FIRM: BR 1608
HOUSTON, TX
713-966-0608

PKG 3A GPHS - Fieldhouse

1000 Keene St,
Galena Park, TX 77547

CLIENT PROJECT NO: 240539

ISSUE FOR PROPOSAL

KEY PLAN
NORTH: PLAN TRUE

STATE OF TEXAS
JOHN R. KUBALA
106120
LICENSED PROFESSIONAL ENGINEER
06/10/2025
Kubala Engineers
F-23612

CLIENT	
Galena Park ISD	
DATE 06/10/2025	PROJECT NUMBER 240539

DRAWING HISTORY

No.	Description	Date

CHECKED BY: SI
DRAWN BY: CML

GENERAL STEEL NOTES AND TYP DETAILS

S-508

Plot Stamp:
6/9/2025 5:32:39 PM

GENERAL STEEL NOTES AND TYP DETAILS
S-509
FOR BLUEBEAM LABELING/OCR:

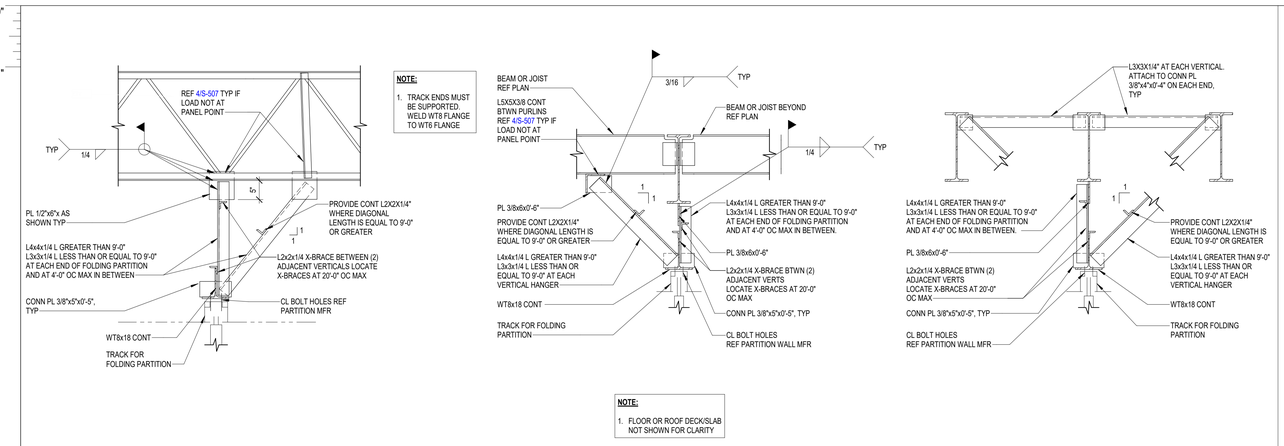

1 FOLDING PARTITION SUPPORT
3/4" = 1'-0"

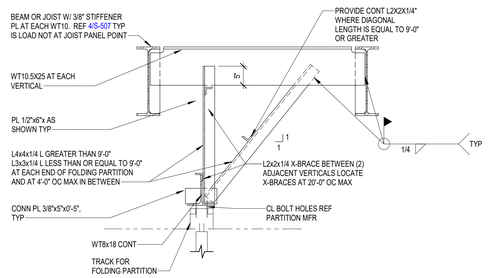

ELEVATOR BEAM / GUIDE RAIL SUPPORT SCHEDULE			
ELEVATORS	FLOORS	DIVIDER BEAM	GUIDE RAIL SUPPORT
TYP	ALL LEVELS	HSS8x4x1/4	HSS10x4x1/2

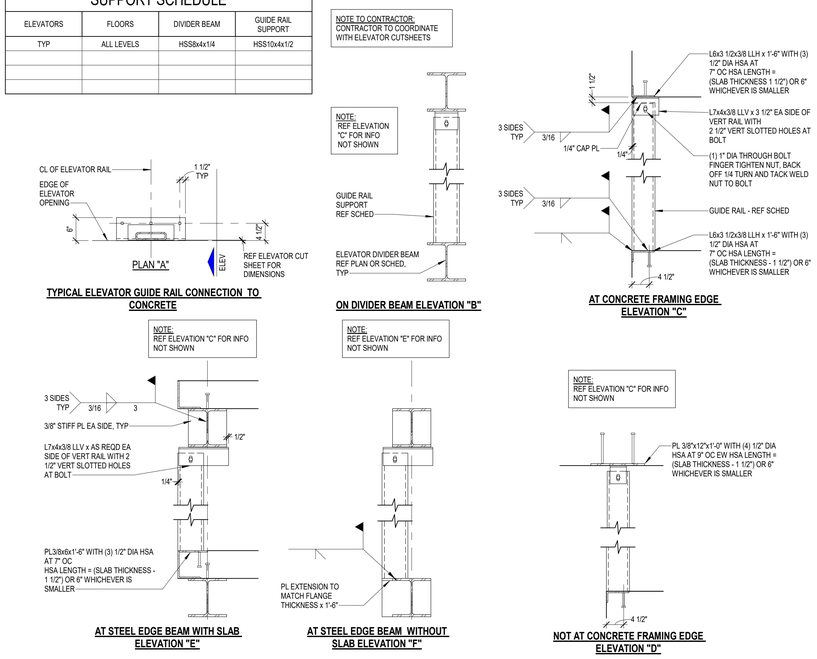

2 TYPICAL ELEVATOR GUIDERAIL SUPPORT DETAILS
3/4" = 1'-0"

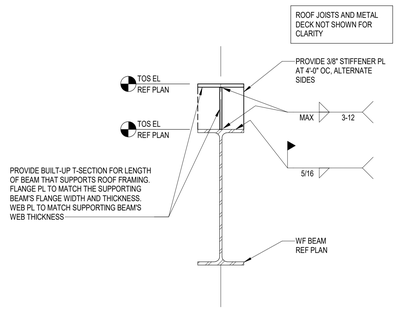

3 BUILT-UP WF BEAM
1 1/2" = 1'-0"

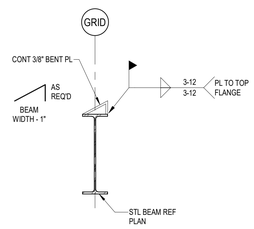

4 SLOPED DECK SUPPORT
3/4" = 1'-0"

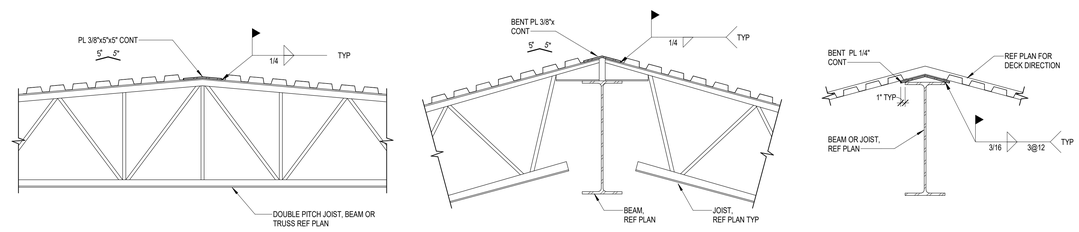

5 TYPICAL BENT PLATE AT RIDGE
3/4" = 1'-0"

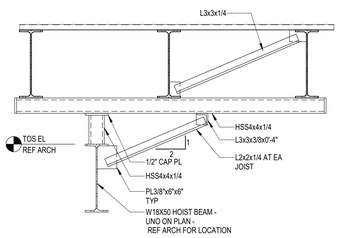

6 TYPICAL HOIST BEAM SUPPORT
3/4" = 1'-0"

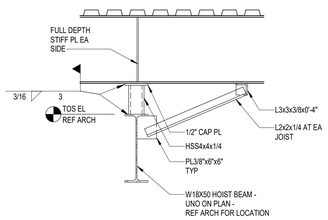

7 TYPICAL DECK SPACER AT STEEL BEAM
3/4" = 1'-0"

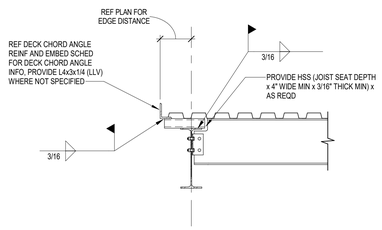

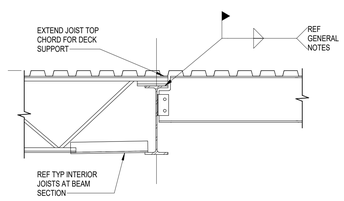

8 TYPICAL JOIST/BEAM AT BEAM
3/4" = 1'-0"

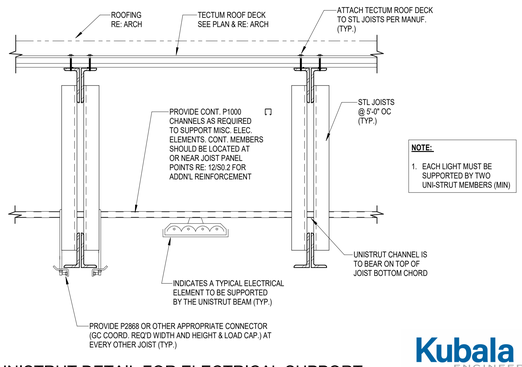

9 UNISTRUT DETAIL FOR ELECTRICAL SUPPORT
3/4" = 1'-0"

Kubala ENGINEERS
Ph: (800)248-3674
www.kubalaengineers.com
TX. REG. NO. F-23612

PBK
www.pbk.com
TX FIRM: BR 1608
HOUSTON, TX 713-965-0608

PKG 3A GPHS - Fieldhouse

1000 Keene St.
Galena Park, TX 77547

CLIENT PROJECT NO: 240539

ISSUE FOR PROPOSAL

KEY PLAN
NORTH: PLAN TRUE

STATE OF TEXAS
JOHN R. KUBALA
106120
06/10/2025
Kubala Engineers
F-23612

CLIENT	
Galena Park ISD	
DATE 06/10/2025	PROJECT NUMBER 240539

DRAWING HISTORY

No.	Description	Date

CHECKED BY: SI
DRAWN BY: CML

GENERAL STEEL NOTES AND TYP DETAILS

S-509

Plot Stamp:
6/9/2025 5:32:40 PM

COMPOSITE FRAMING DETAILS
S-510

FOR BLUEBEAM LABELING/OCR:

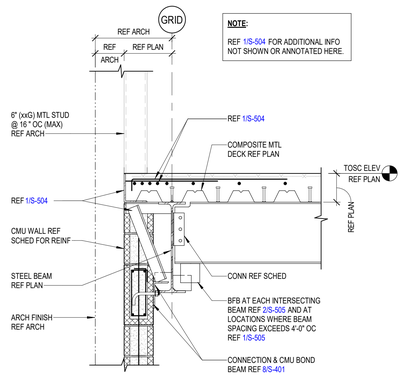

NOTE:
REF 1/S-504 FOR ADDITIONAL INFO NOT SHOWN OR ANNOTATED HERE.

1 EXTERIOR FLOOR EDGE DETAIL AT STUD
3/4" = 1'-0"

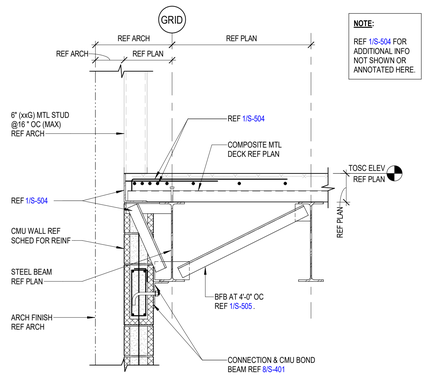

NOTE:
REF 1/S-504 FOR ADDITIONAL INFO NOT SHOWN OR ANNOTATED HERE.

2 EXTERIOR FLOOR EDGE DETAIL AT STUD
3/4" = 1'-0"

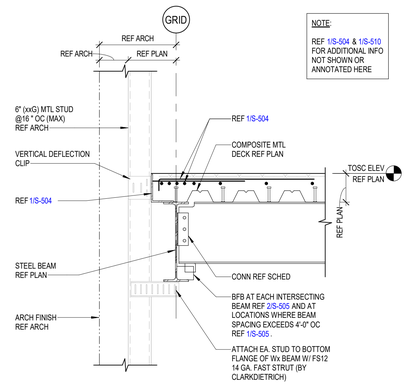

NOTE:
REF 1/S-504 & 1/S-510 FOR ADDITIONAL INFO NOT SHOWN OR ANNOTATED HERE

3 EXTERIOR FLOOR EDGE DETAIL AT STUD
3/4" = 1'-0"

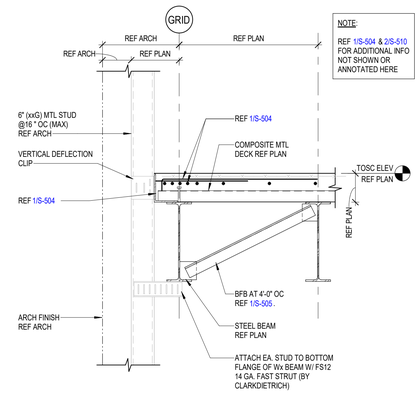

NOTE:
REF 1/S-504 & 2/S-510 FOR ADDITIONAL INFO NOT SHOWN OR ANNOTATED HERE

4 EXTERIOR FLOOR EDGE DETAIL AT STUD
3/4" = 1'-0"

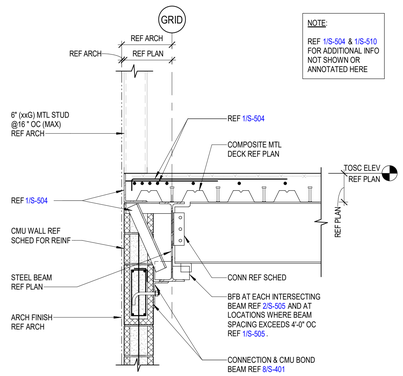

NOTE:
REF 1/S-504 & 1/S-510 FOR ADDITIONAL INFO NOT SHOWN OR ANNOTATED HERE

5 INTERIOR FLOOR EDGE DETAIL AT STUD
3/4" = 1'-0"

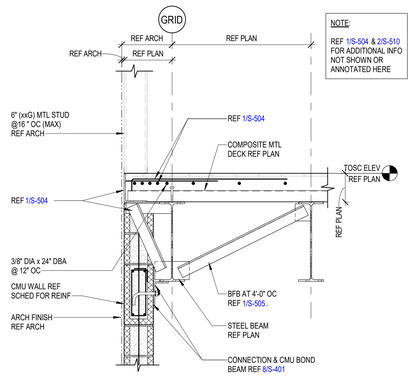

NOTE:
REF 1/S-504 & 2/S-510 FOR ADDITIONAL INFO NOT SHOWN OR ANNOTATED HERE

6 INTERIOR FLOOR EDGE DETAIL AT STUD
3/4" = 1'-0"

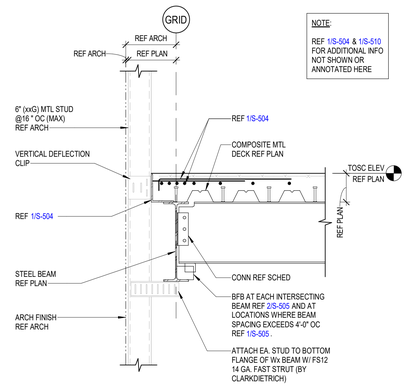

NOTE:
REF 1/S-504 & 1/S-510 FOR ADDITIONAL INFO NOT SHOWN OR ANNOTATED HERE

7 INTERIOR FLOOR EDGE DETAIL AT STUD
3/4" = 1'-0"

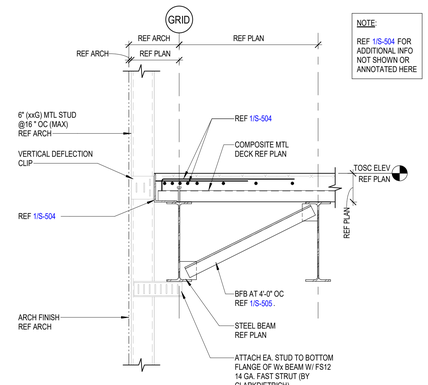

NOTE:
REF 1/S-504 FOR ADDITIONAL INFO NOT SHOWN OR ANNOTATED HERE

8 INTERIOR FLOOR EDGE DETAIL AT STUD
3/4" = 1'-0"

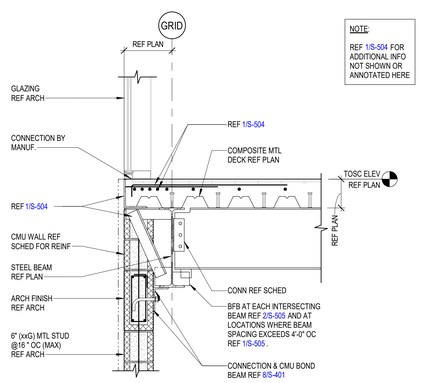

NOTE:
REF 1/S-504 FOR ADDITIONAL INFO NOT SHOWN OR ANNOTATED HERE

9 BEAM AT GLAZING AND STUD WALL
3/4" = 1'-0"

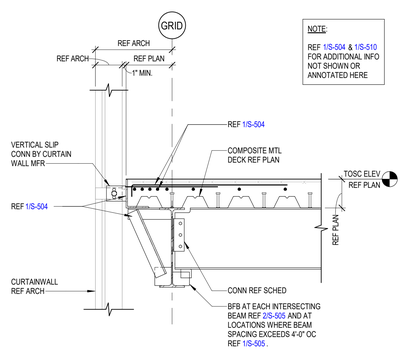

NOTE:
REF 1/S-504 & 1/S-510 FOR ADDITIONAL INFO NOT SHOWN OR ANNOTATED HERE

10 FLOOR EDGE DETAIL AT CURTAIN WALL
3/4" = 1'-0"

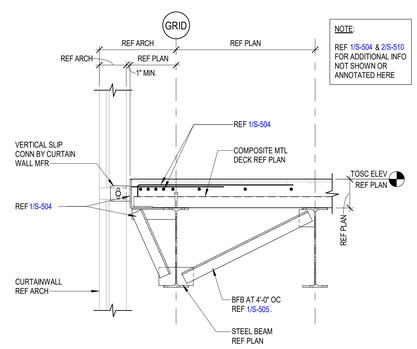

NOTE:
REF 1/S-504 & 2/S-510 FOR ADDITIONAL INFO NOT SHOWN OR ANNOTATED HERE

11 FLOOR EDGE DETAIL AT CURTAIN WALL
3/4" = 1'-0"

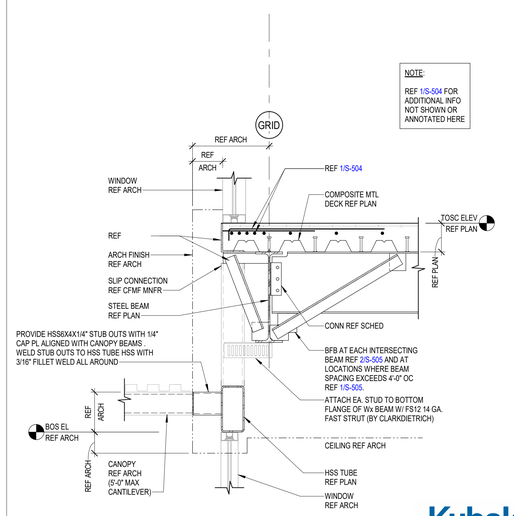

NOTE:
REF 1/S-504 FOR ADDITIONAL INFO NOT SHOWN OR ANNOTATED HERE

12 EXTERIOR FLOOR EDGE DETAIL AT WINDOW
3/4" = 1'-0"

Kubala ENGINEERS
Ph: (936)246-3674
www.kubalaengineers.com
TX. REG. NO. F-23612

PBK
www.pbk.com
TX FIRM: BR 1608
HOUSTON, TX
713-365-0608

PKG 3A GPHS - Fieldhouse

1000 Keene St.
Galena Park, TX.77547

CLIENT PROJECT NO: 240539

ISSUE FOR PROPOSAL

Galena Park ISD

KEY PLAN
NORTH: PLAN TRUE

STATE OF TEXAS
JOHN R. KUBALA
106120
PROFESSIONAL ENGINEER
06/10/2025
Kubala Engineers
F-23612

CLIENT	
Galena Park ISD	
DATE 06/10/2025	PROJECT NUMBER 240539

DRAWING HISTORY

No.	Description	Date

CHECKED BY: SI
DRAWN BY: CML

COMPOSITE FRAMING DETAILS

S-510

Plot Stamp:
6/9/2025 5:32:41 PM

COMPOSITE FRAMING DETAILS
S-511
FOR BLUEBEAM LABELING/OCR:

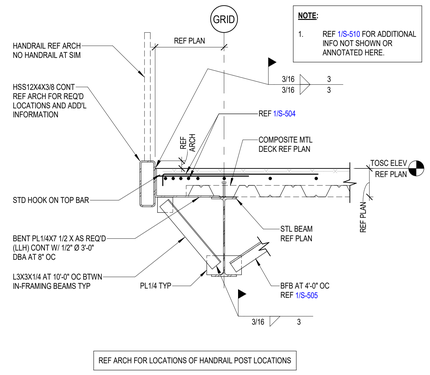

1 TYPICAL SLAB EDGE DETAIL AT GUARDRAILS
3/4" = 1'-0"

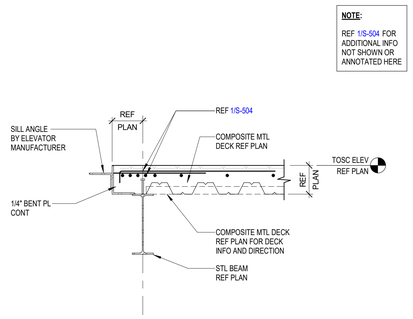

2 TYPICAL SLAB EDGE AT ELEVATOR SILL
3/4" = 1'-0"

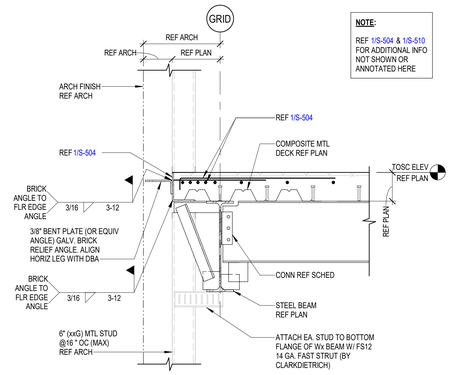

3 EXTERIOR FLOOR EDGE DETAIL AT STUD
3/4" = 1'-0"

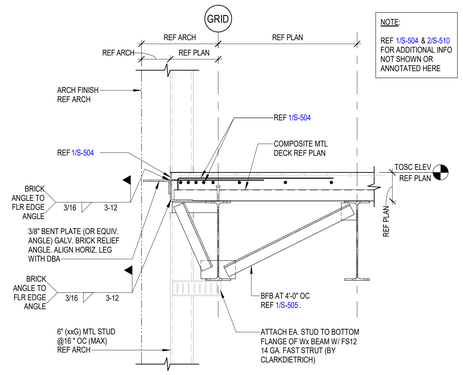

4 EXTERIOR FLOOR EDGE DETAIL AT STUD
3/4" = 1'-0"

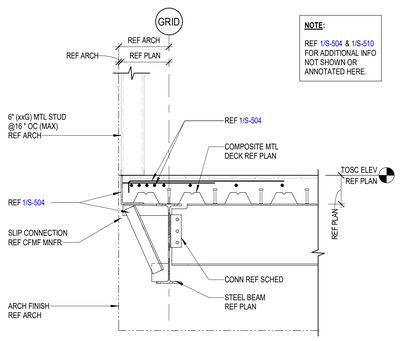

5 INTERIOR FLOOR EDGE DETAIL AT STUD
3/4" = 1'-0"

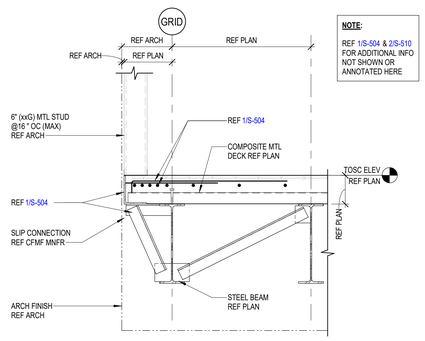

6 INTERIOR FLOOR EDGE DETAIL AT STUD
3/4" = 1'-0"

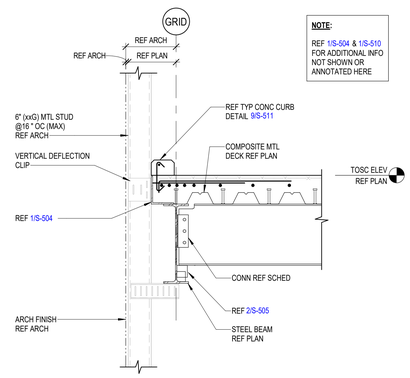

7 INTERIOR FLOOR EDGE DETAIL AT STUD
3/4" = 1'-0"

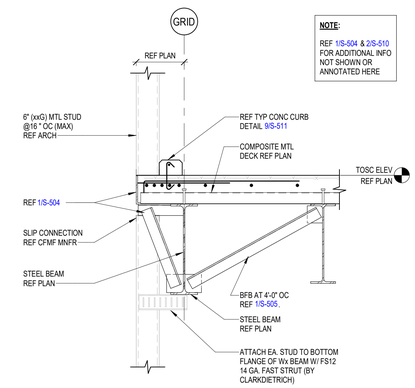

8 FLOOR EDGE DETAIL AT STUD
3/4" = 1'-0"

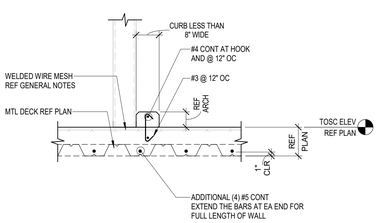

9 TYPICAL CURB AT COMPOSITE FLOOR
3/4" = 1'-0"

Kubala ENGINEERS
Ph: (800)246-3674
www.kubalaengineers.com
TX. REG. NO. F-23612

PBK
www.pbk.com
TX FIRM: BR 1608
HOUSTON, TX
713-966-0608

PKG 3A GPHS - Fieldhouse

1000 Keene St.
Galena Park, TX 77547

CLIENT PROJECT NO: 240539

ISSUE FOR PROPOSAL

KEY PLAN
NORTH: PLAN TRUE

STATE OF TEXAS
JOHN R. KUBALA
106120
06/10/2025
Kubala Engineers
F-23612

CLIENT	
Galena Park ISD	
DATE 06/10/2025	PROJECT NUMBER 240539

DRAWING HISTORY

No.	Description	Date

CHECKED BY: SI
DRAWN BY: CML

COMPOSITE FRAMING DETAILS

S-511

Plot Stamp:
6/9/2025 5:32:42 PM

COMPOSITE FRAMING DETAILS
S-512
FOR BLUEBEAM LABELING/OCR:

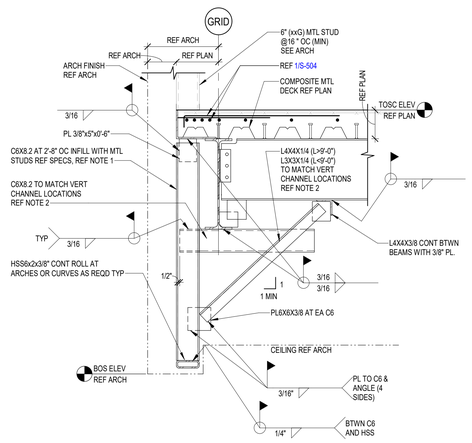

NOTES:

1. LOCATE FIRST VERT CHANNEL AT 6" MAX. FROM EACH END OF OPENING AN EACH SIDE OF COLUMN FACE.
2. LOWER END OF THE DIAGONAL ANGLE SHALL BE PLACED LESS THAN 6" ABOVE THE TUBE. RAISE THIS END UP ONLY TO AVOID CONFLICTING WITH THE CEILING.
3. AT JOISTS, PROVIDE JOIST CHORD STRENGTHENING BRACING WHERE BRACING IS NOT AT JOIST TOP CHORD PANEL POINT.

NOTES:

FOR OPENINGS LESS THAN 8'-0" WIDE
REFER TO LOOSE LINTEL SCHEDULE.

1 TYPICAL WINDOW SUPPORT OVER OPENINGS GREATER THAN 8'-0"
3/4" = 1'-0"

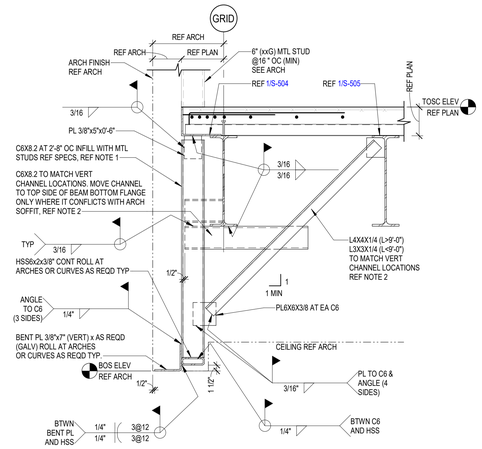

NOTES:

1. LOCATE FIRST VERT CHANNEL AT 6" MAX. FROM EACH END OF OPENING AN EACH SIDE OF COLUMN FACE.
2. LOWER END OF THE DIAGONAL ANGLE SHALL BE PLACED LESS THAN 6" ABOVE THE TUBE. RAISE THIS END UP ONLY TO AVOID CONFLICTING WITH THE CEILING.
3. AT JOISTS, PROVIDE JOIST CHORD STRENGTHENING BRACING WHERE BRACING IS NOT AT JOIST TOP CHORD PANEL POINT.

NOTES:

FOR OPENINGS LESS THAN 8'-0" WIDE
REFER TO LOOSE LINTEL SCHEDULE.

2 TYPICAL MASONRY SUPPORT OVER OPENINGS GREATER THAN 8'-0"
3/4" = 1'-0"

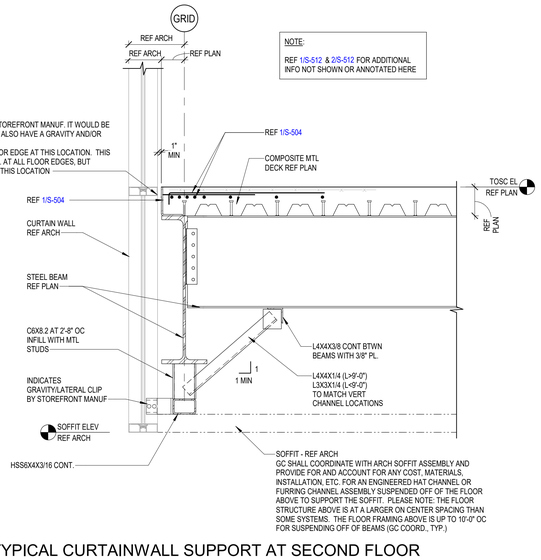

3 TYPICAL CURTAINWALL SUPPORT AT SECOND FLOOR
3/4" = 1'-0"

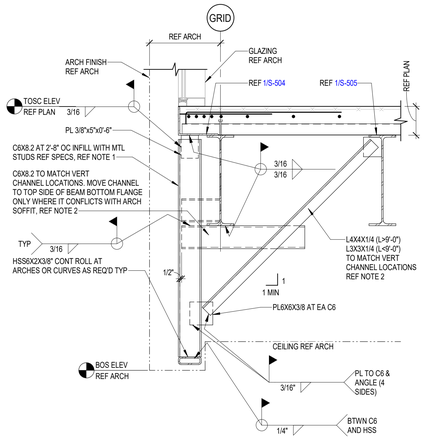

5 TYPICAL GLAZING SUPPORT OVER OPENINGS
3/4" = 1'-0"

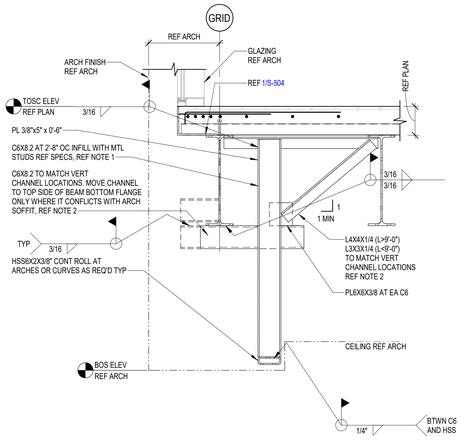

6 TYPICAL GLAZING SUPPORT OVER OPENINGS
3/4" = 1'-0"

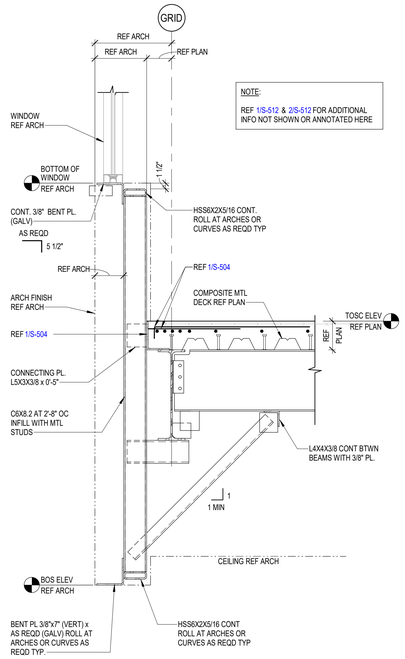

4 HANGING BRICK DETAIL
3/4" = 1'-0"

Kubala
ENGINEERS
Ph: (800)246-3674
www.kubalaengineers.com
TX. REG. NO. F-23612

PBK
www.pbk.com
TX FIRM: BR 1608
HOUSTON, TX
713-365-0608

PKG 3A GPHS - Fieldhouse

1000 Keene St,
Galena Park, TX 77547

CLIENT PROJECT NO: 240539

ISSUE FOR PROPOSAL

Galena Park ISD
GP
BUILDING BUILDERS

KEY PLAN
NORTH: PLAN TRUE

STATE OF TEXAS
JOHN R. KUBALA
106120
LICENSED PROFESSIONAL ENGINEER
06/10/2025
Kubala Engineers
F-23612

CLIENT	
Galena Park ISD	
DATE 06/10/2025	PROJECT NUMBER 240539

DRAWING HISTORY

No.	Description	Date

CHECKED BY: SI
DRAWN BY: CML

COMPOSITE FRAMING DETAILS

S-512

Plot Stamp:
6/9/2025 5:32:43 PM

COMPOSITE FRAMING DETAILS
S-513
FOR BLUEBEAM LABELING/OCR:

0"
1"

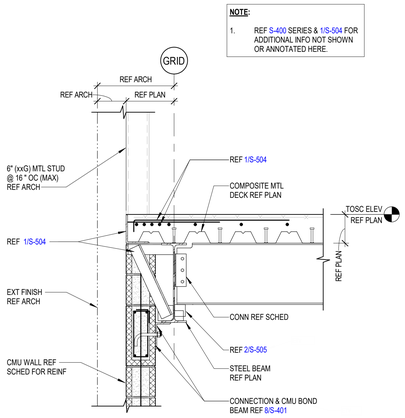

1 EXTERIOR FLOOR EDGE AT CMU WALL
3/4" = 1'-0"

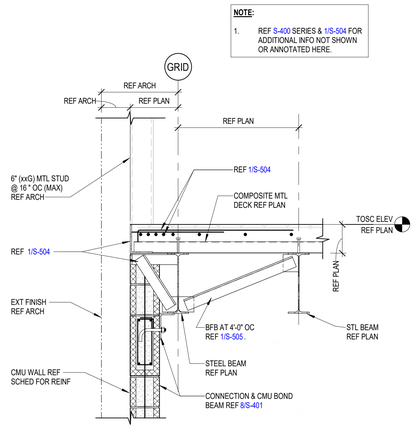

2 EXTERIOR FLOOR EDGE AT CMU WALL
3/4" = 1'-0"

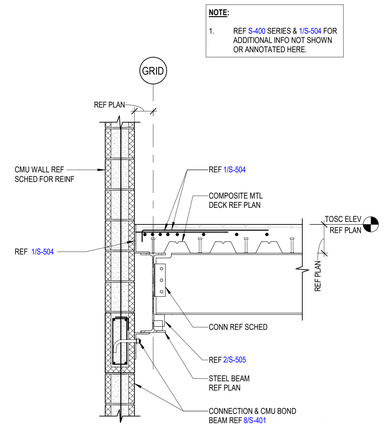

3 INTERIOR FLOOR EDGE AT CMU WALL
3/4" = 1'-0"

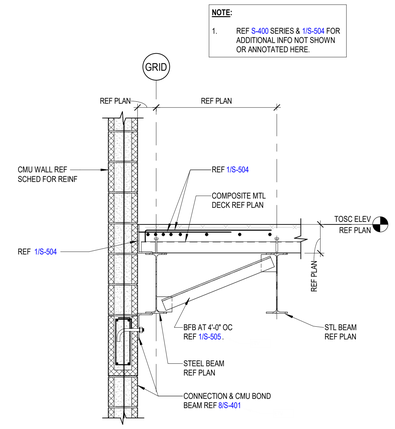

4 INTERIOR FLOOR EDGE AT CMU WALL
3/4" = 1'-0"

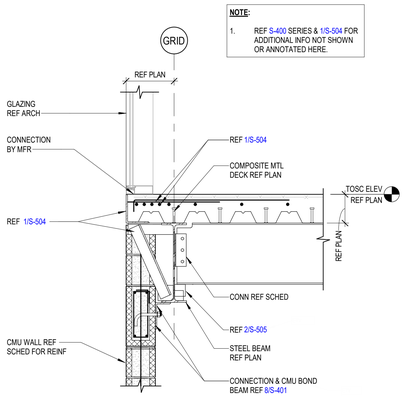

5 BEAM AT GLAZING AND CMU WALL
3/4" = 1'-0"

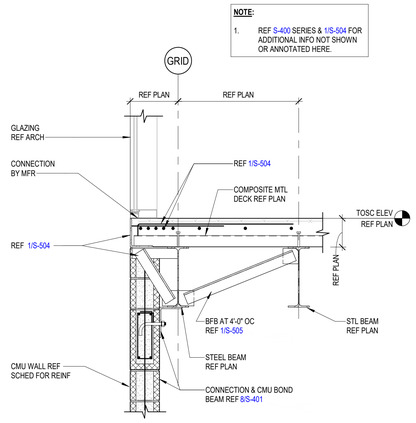

6 EXTERIOR FLOOR EDGE AT CMU WALL
3/4" = 1'-0"

Kubala ENGINEERS
Ph: (800)248-3674
www.kubalaengineers.com
TX. REG. NO. F-23612

PBK
www.pbk.com
TX FIRM: BR 1608
HOUSTON, TX
713-365-0608

PKG 3A GPHS - Fieldhouse

1000 Keene St.
Galena Park, TX 77547

CLIENT PROJECT NO: 240539
ISSUE FOR PROPOSAL

KEY PLAN
NORTH: PLAN TRUE

STATE OF TEXAS
JOHN R. KUBALA
106120
06/10/2025
Kubala Engineers
F-23612

CLIENT	
Galena Park ISD	
DATE 06/10/2025	PROJECT NUMBER 240539

DRAWING HISTORY

No.	Description	Date

CHECKED BY: SI
DRAWN BY: CML

COMPOSITE FRAMING DETAILS

S-513

Plot Stamp:
6/9/2025 5:32:43 PM

ROOF FRAMING DETAILS
S-520
FOR BLUEBEAM LABELING/OCR:

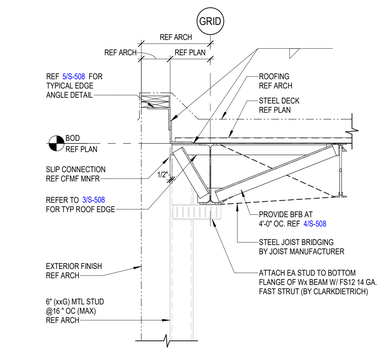

1 TYPICAL ROOF SECTION
3/4" = 1'-0"

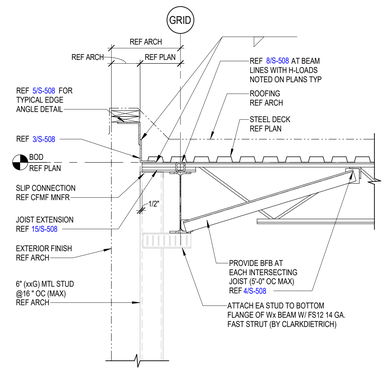

2 TYPICAL ROOF SECTION
3/4" = 1'-0"

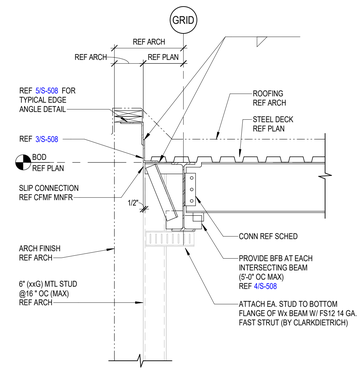

3 TYPICAL ROOF SECTION
3/4" = 1'-0"

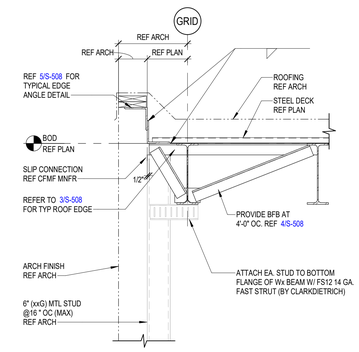

4 TYPICAL ROOF SECTION
3/4" = 1'-0"

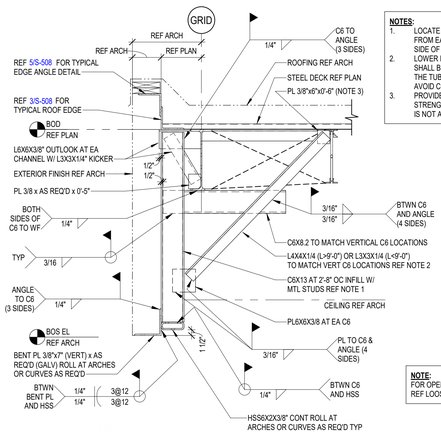

NOTES:
1. LOCATE FIRST VERT CHANNEL AT 6" MAX FROM EACH END OF OPENING AND EACH SIDE OF COLUMN FACE.
2. LOWER END OF THE DIAGONAL ANGLE SHALL BE PLACED LESS THAN 6" ABOVE THE TUBE. RAISE THIS END UP ONLY TO AVOID CONFLICTING WITH THE CEILING.
3. PROVIDE JOIST TOP CHORD STRENGTHENING BRACING WHERE PLATE IS NOT AT JOIST TOP CHORD PANEL POINT.

NOTE:
FOR OPENINGS LESS THAN 8'-0" REF LOOSE LINTEL SCHED

5 TYPICAL MASONRY SUPPORT OVER OPENINGS GREATER THAN 8'-0"
3/4" = 1'-0"

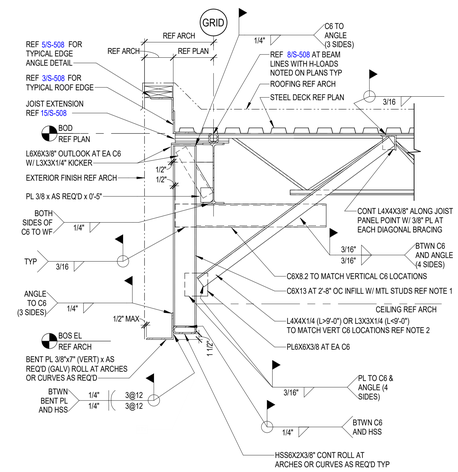

NOTE:
FOR OPENINGS LESS THAN 8'-0" REF LOOSE LINTEL SCHED

6 TYPICAL MASONRY SUPPORT OVER OPENINGS GREATER THAN 8'-0"
3/4" = 1'-0"

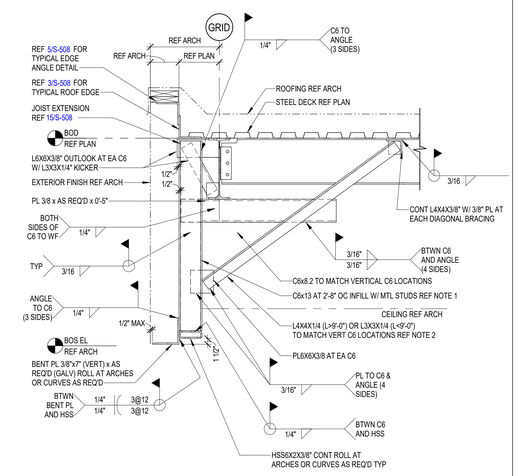

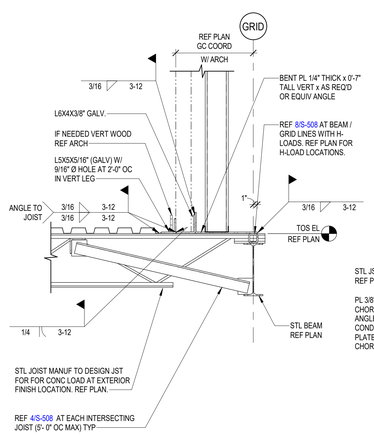

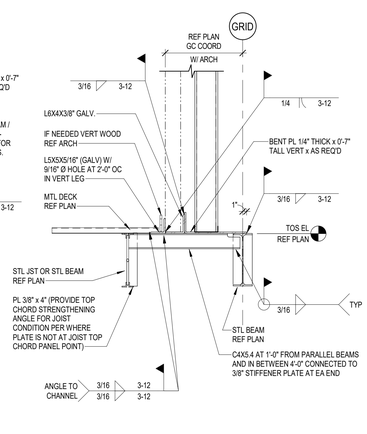

NOTE:
JOIST ENGINEER TO DESIGN JOISTS FOR ADDITIONAL DEAD LOAD ASSOCIATED WITH VENEER AND WALL SYSTEM FOR TOTAL HEIGHT OF WALL SUPPORTED ABOVE. ASSUME THE FOLLOWING DEAD LOADS (TYP): MASONRY DEAD LOAD = 40 PSF CFMF WALL SYSTEM = 15 PSF NON-MASONRY VENEER = 5 PSF

7 TYP. EXTERIOR FINISH SUPPORT AT HIGH/LOW ROOF TRANSITIONS
3/4" = 1'-0"

NOTE:
REF PLANS FOR ROOF SLOPES.

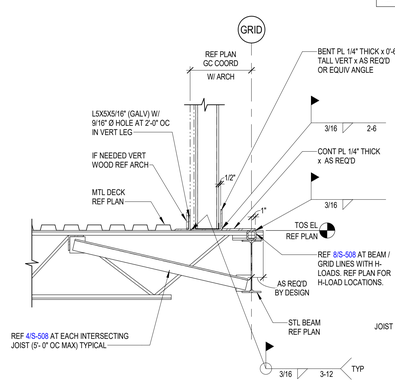

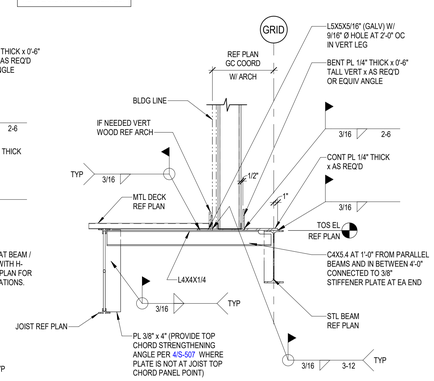

NOTE:
JOIST ENGINEER TO DESIGN JOISTS FOR ADDITIONAL DEAD LOAD ASSOCIATED WITH VENEER AND WALL SYSTEM FOR TOTAL HEIGHT OF WALL SUPPORTED ABOVE. ASSUME THE FOLLOWING DEAD LOADS (TYP): MASONRY DEAD LOAD = 40 PSF CFMF WALL SYSTEM = 15 PSF NON-MASONRY VENEER = 5 PSF

8 TYP. METAL PANEL FINISH SUPPORT AT HIGH/LOW ROOF TRANSITIONS
3/4" = 1'-0"

Kubala ENGINEERS
Ph: (800)246-3674
www.kubalaengineers.com
TX. REG. NO. F-23612

PBK
www.pbk.com
TX FIRM: BR 1608
HOUSTON, TX 713-965-0608

PKG 3A GPHS - Fieldhouse

1000 Keene St.
Galena Park, TX 77547

CLIENT PROJECT NO: 240539

ISSUE FOR PROPOSAL

KEY PLAN
NORTH: PLAN TRUE

STATE OF TEXAS
JOHN R. KUBALA
106120
06/10/2025
Kubala Engineers
F-23612

CLIENT	
Galena Park ISD	
DATE 06/10/2025	PROJECT NUMBER 240539

DRAWING HISTORY

No.	Description	Date

CHECKED BY: SI
DRAWN BY: CML

ROOF FRAMING DETAILS

S-520

Plot Stamp:
6/9/2025 5:32:45 PM

ROOF FRAMING DETAILS
S-521

FOR BLUEBEAM LABELING/OCR:

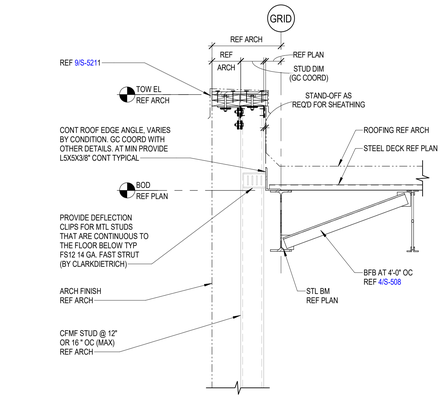

1 TYPICAL ROOF SECTION WITH PARAPET
3/4" = 1'-0"

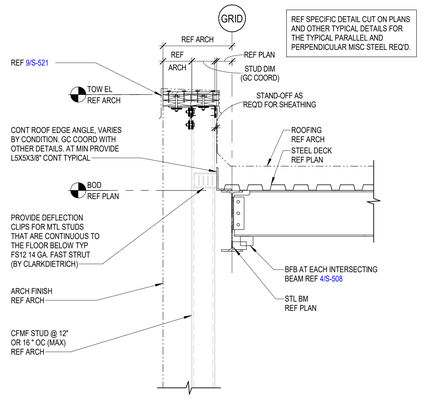

2 TYPICAL ROOF SECTION WITH PARAPET
3/4" = 1'-0"

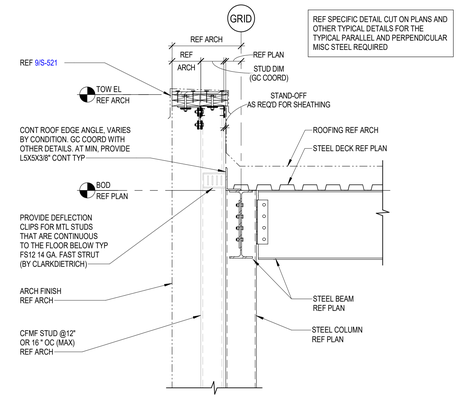

3 TYPICAL ROOF SECTION WITH PARAPET AT COLUMN
3/4" = 1'-0"

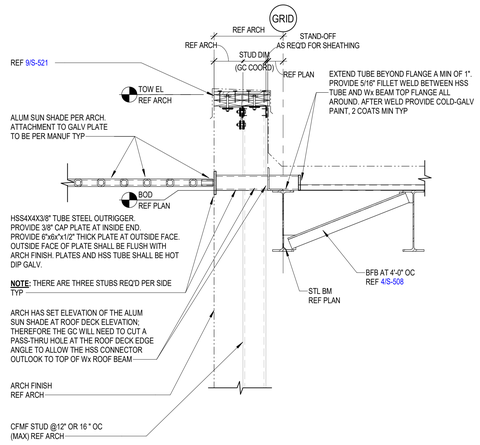

4 PARAPET ROOF EDGE DETAIL AT ALUMINUM SUN SHADE ATTACHMENT / OUTLOOK
3/4" = 1'-0"

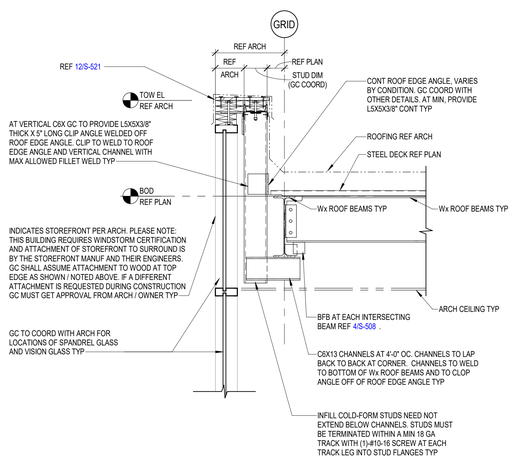

5 TYPICAL TOP OF PARAPET DETAIL WITH STOREFRONT AND/OR MISC. STEEL BACK-UP
3/4" = 1'-0"

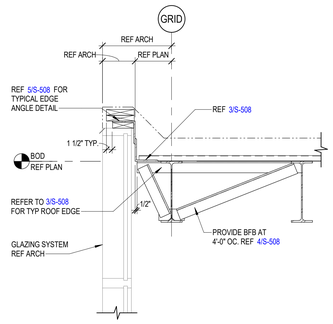

6 ROOF SECTION
3/4" = 1'-0"

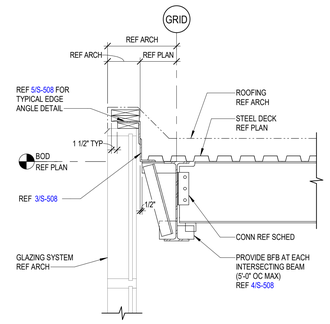

7 ROOF SECTION
3/4" = 1'-0"

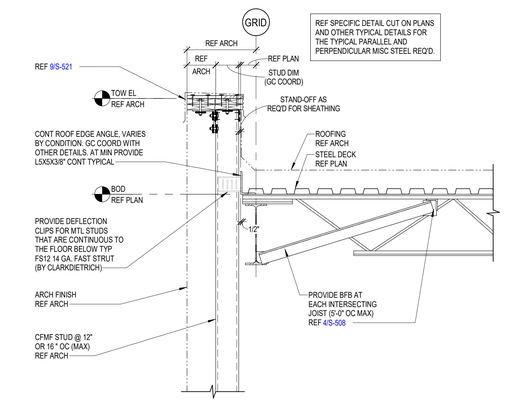

8 ROOF SECTION
3/4" = 1'-0"

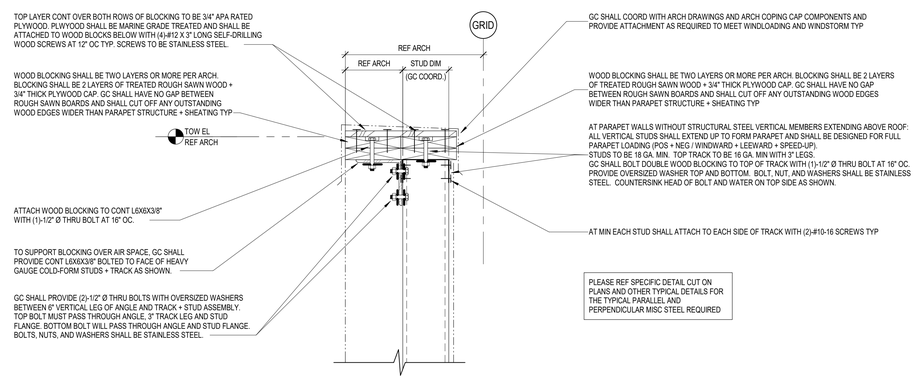

9 TYPICAL TOP OF PARAPET DETAIL WITH METAL STUD-FRAMING
1 1/2" = 1'-0"

Kubala ENGINEERS
Ph: (800)246-3674
www.kubalaengineers.com
TX. REG. NO. F-23612

PBK
www.pbk.com
TX FIRM: BR 1608
HOUSTON, TX
713-365-0608

PKG 3A GPHS - Fieldhouse

1000 Keene St.
Galena Park, TX 77547

CLIENT PROJECT NO: 240539

ISSUE FOR PROPOSAL

Galena Park ISD — GP — BUILDING IN ALL FOR ALL KIDS

KEY PLAN
NORTH: PLAN TRUE

STATE OF TEXAS
JOHN R. KUBALA
106120
06/10/2025
Kubala Engineers
F-23612

CLIENT	
Galena Park ISD	
DATE 06/10/2025	PROJECT NUMBER 240539

DRAWING HISTORY

No.	Description	Date

CHECKED BY: SI

DRAWN BY: CML

ROOF FRAMING DETAILS

S-521

Plot Stamp:
6/9/2025 5:32:46 PM

ROOF FRAMING DETAILS
S-522
FOR BLUEBEAM LABELING/OCR:

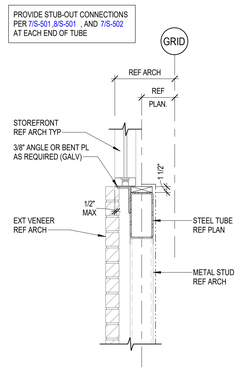

5 HSS HEADER DETAIL
3/4" = 1'-0"

NOTE:

1. IF MORE HSS BEAMS ARE NEEDED THAN THOSE SHOWN CONTRACTOR SHALL CARRY THE COST OF THE ADDED HSS BEAMS AS REQ'D FOR THEIR FIRE RISER/SPRINKLER DESIGN.

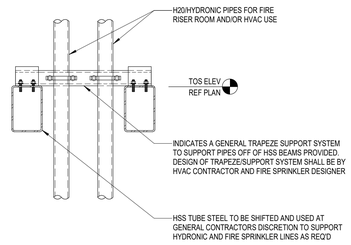

6 FIRE/SPRINKLER SUPPORT
3/4" = 1'-0"

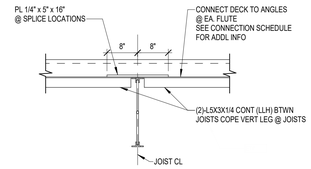

7 TYPICAL DETAIL
3/4" = 1'-0"

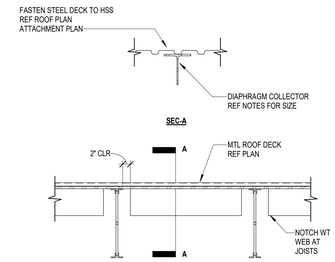

NOTE:

1. REFER TO PLAN FOR COLLECTOR LOCATIONS AND SIZES.

8 DIAPHRAGM COLLECTOR PERP TO JOISTS
3/4" = 1'-0"

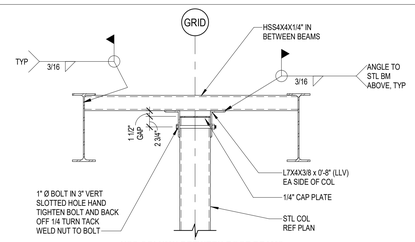

HSS COLUMN BETWEEN ROOF BEAMS

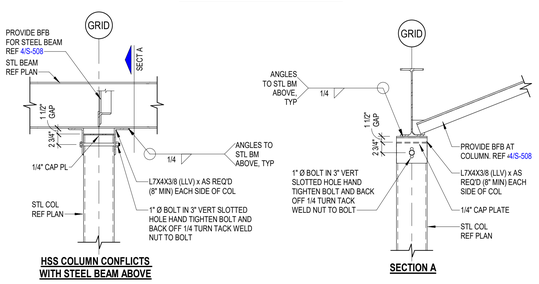

HSS COLUMN CONFLICTS WITH STEEL BEAM ABOVE

SECTION A

9 FRAMING SECTION
3/4" = 1'-0"

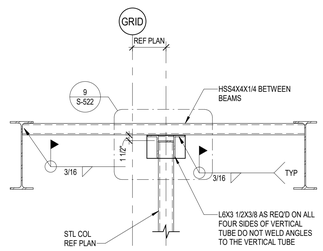

10 FRAMING SECTION
3/4" = 1'-0"

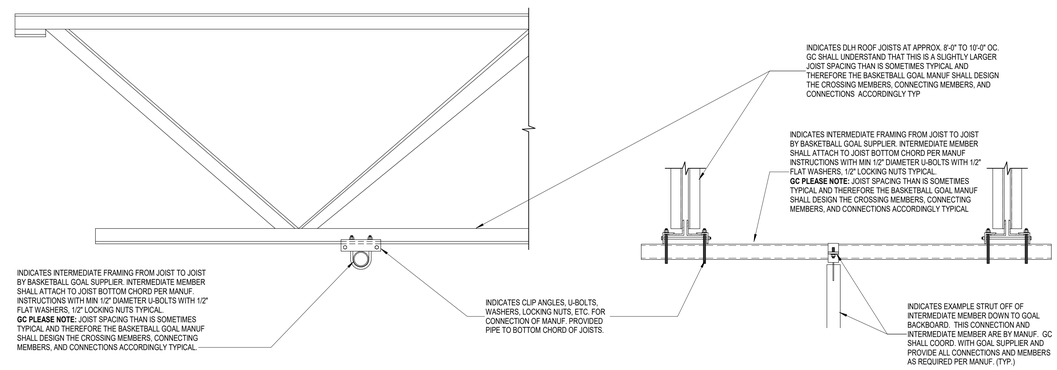

11 TYPICAL BASKETBALL GOAL DETAIL
3/4" = 1'-0"

Kubala ENGINEERS
Ph: (800)246-3674
www.kubalaengineers.com
TX. REG. NO. F-23612

PBK
www.pbk.com
TX FIRM: BR 1608
HOUSTON, TX
713-365-0608

PKG 3A GPHS - Fieldhouse

1000 Keene St.
Galena Park, TX 77547

CLIENT PROJECT NO: 240539

ISSUE FOR PROPOSAL

KEY PLAN
NORTH: PLAN TRUE

STATE OF TEXAS
JOHN R. KUBALA
106120
PROFESSIONAL ENGINEER
06/10/2025
Kubala Engineers
F-23612

CLIENT	
Galena Park ISD	
DATE 06/10/2025	PROJECT NUMBER 240539

DRAWING HISTORY

No.	Description	Date

CHECKED BY: SI
DRAWN BY: CML

ROOF FRAMING DETAILS

S-522

Plot Stamp:
6/9/2025 5:32:47 PM

ROOF FRAMING DETAILS
S-524
FOR BLUEBEAM LABELING/OCR:

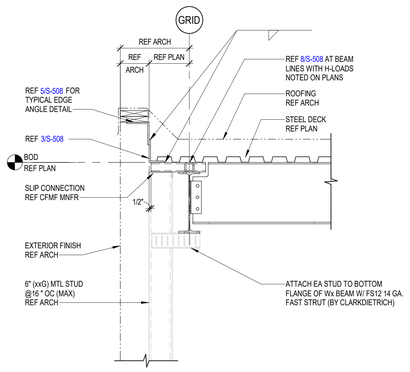

1 TYPICAL ROOF SECTION
3/4" = 1'-0"

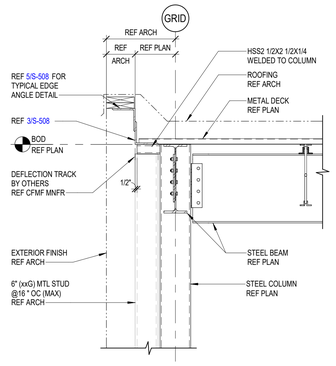

2 TYPICAL ROOF SECTION AT COLUMN
3/4" = 1'-0"

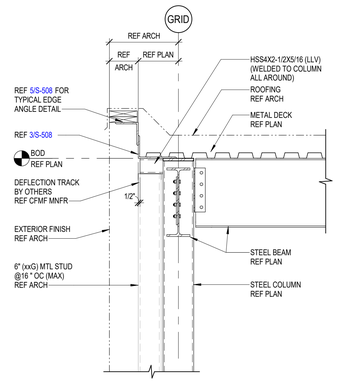

3 TYPICAL ROOF SECTION AT COLUMN
3/4" = 1'-0"

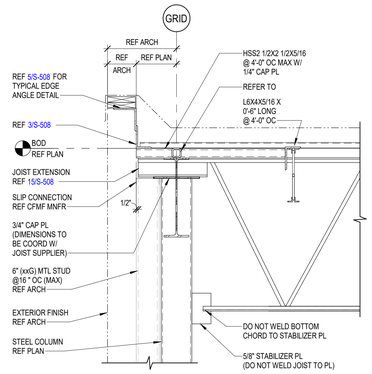

4 ROOF SECTION
3/4" = 1'-0"

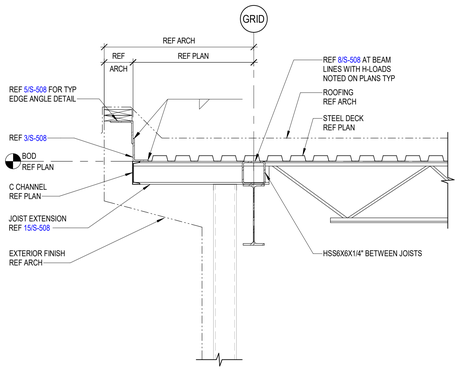

5 POP UP ROOF FRAMING SECTION
3/4" = 1'-0"

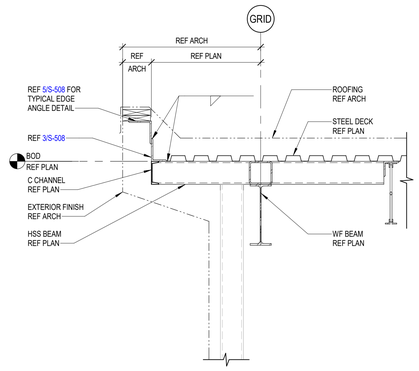

6 POP UP ROOF FRAMING SECTION
3/4" = 1'-0"

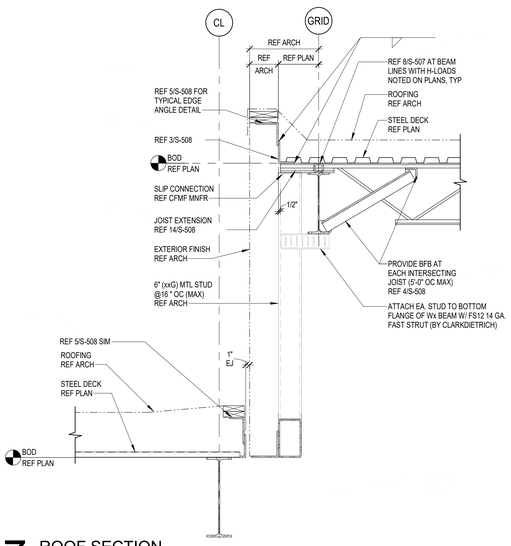

7 ROOF SECTION
3/4" = 1'-0"

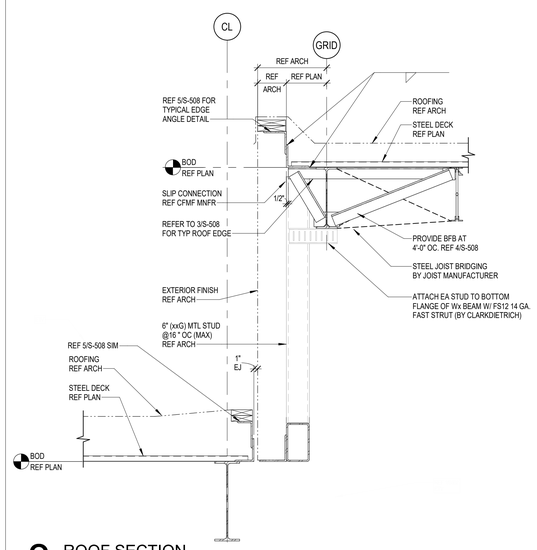

8 ROOF SECTION
3/4" = 1'-0"

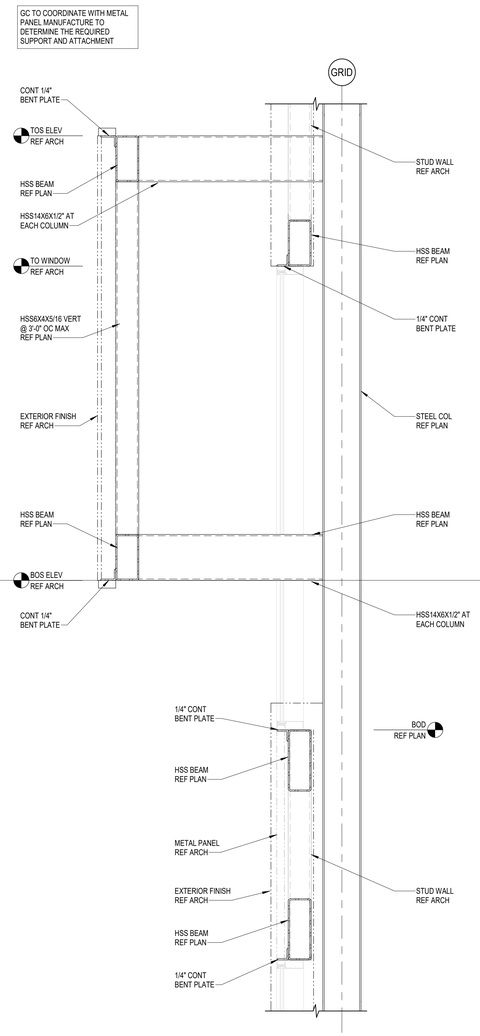

9 FRAMING SECTION
3/4" = 1'-0"

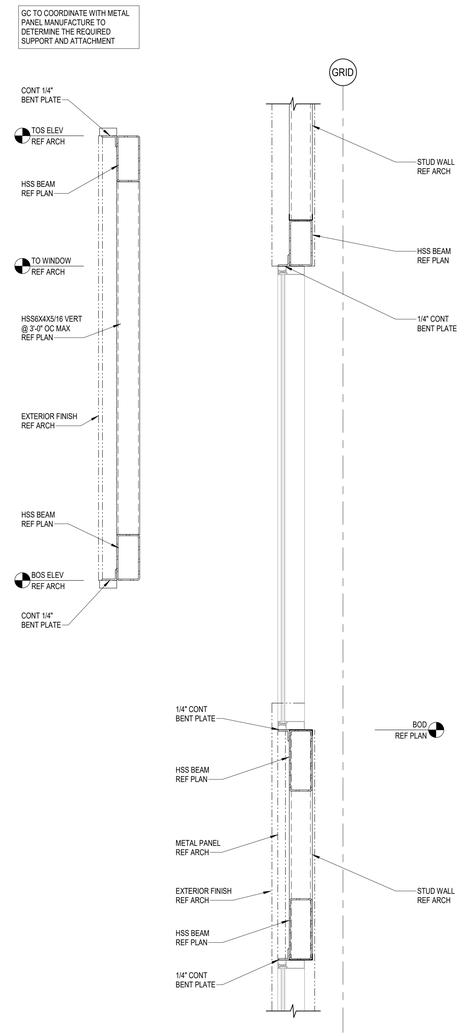

10 FRAMING SECTION
3/4" = 1'-0"

Kubala ENGINEERS
Ph: (800)248-3674
www.kubalaengineers.com
TX. REG. NO. F-23612

PBK
www.pbk.com
TX FIRM: BR 1608
HOUSTON, TX
713-365-0608

PKG 3A GPHS - Fieldhouse

1000 Keene St,
Galena Park, TX 77547

CLIENT PROJECT NO: 240539

ISSUE FOR PROPOSAL

KEY PLAN
NORTH: PLAN TRUE

STATE OF TEXAS
JOHN R. KUBALA
106120
06/10/2025
Kubala Engineers
F-23612

CLIENT	
Galena Park ISD	
DATE 06/10/2025	PROJECT NUMBER 240539

DRAWING HISTORY

No.	Description	Date

CHECKED BY: SI
DRAWN BY: CML

ROOF FRAMING DETAILS

S-524

Plot Stamp:
6/9/2025 5:32:48 PM

TYPICAL WIND BRACING ELEVATIONS
S-600

FOR BLUEBEAM LABELING/OCR:

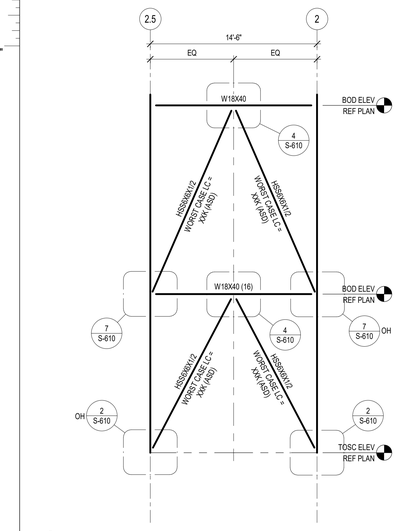

1 BRACE ELEVATION
3/16" = 1'-0"

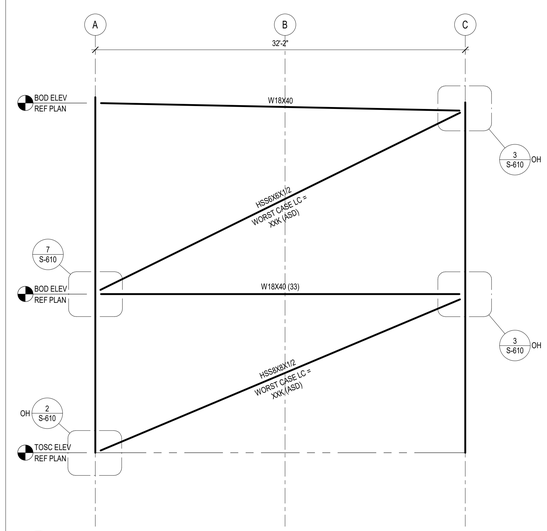

2 BRACE ELEVATION
3/16" = 1'-0"

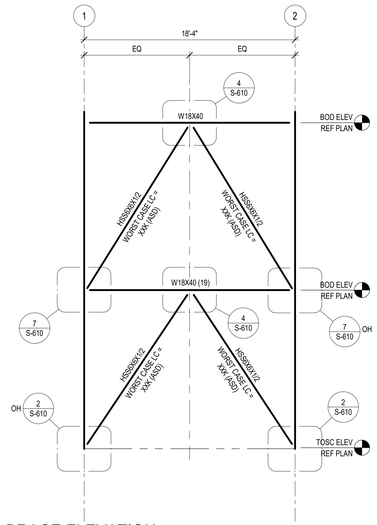

3 BRACE ELEVATION
3/16" = 1'-0"

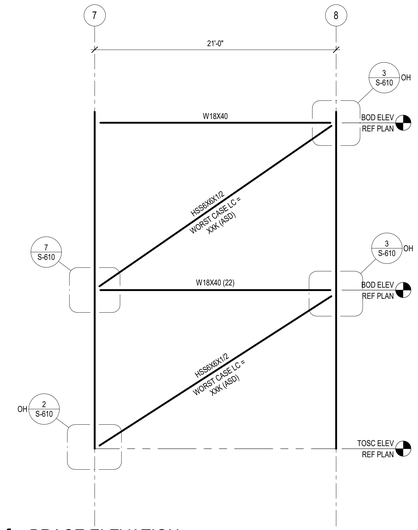

4 BRACE ELEVATION
3/16" = 1'-0"

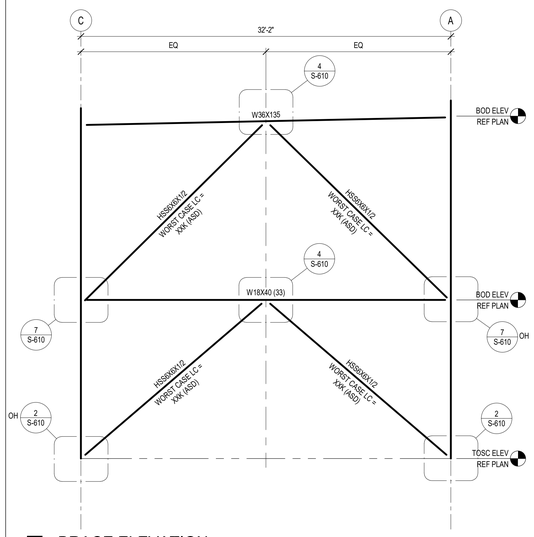

5 BRACE ELEVATION
3/16" = 1'-0"

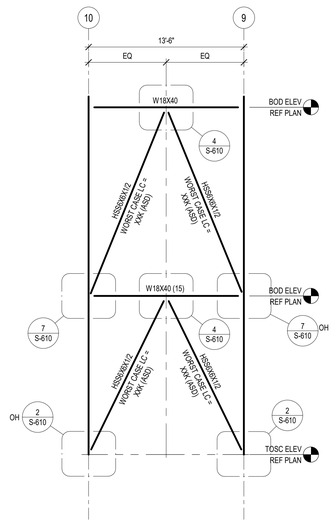

6 BRACE ELEVATION
3/16" = 1'-0"

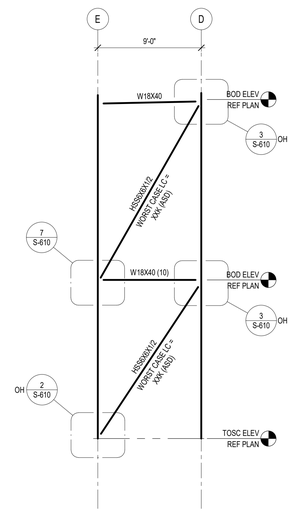

7 BRACE ELEVATION
3/16" = 1'-0"

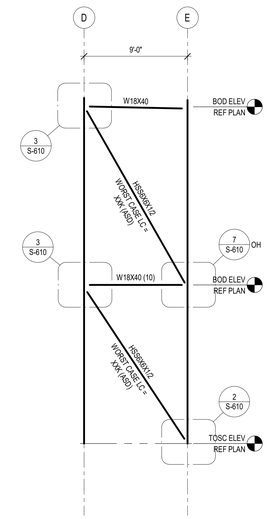

8 BRACE ELEVATION
3/16" = 1'-0"

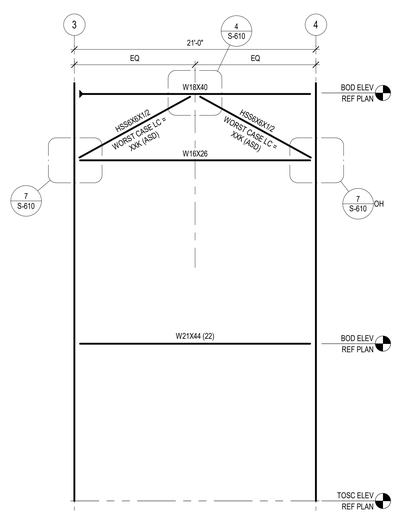

9 BRACE ELEVATION
3/16" = 1'-0"

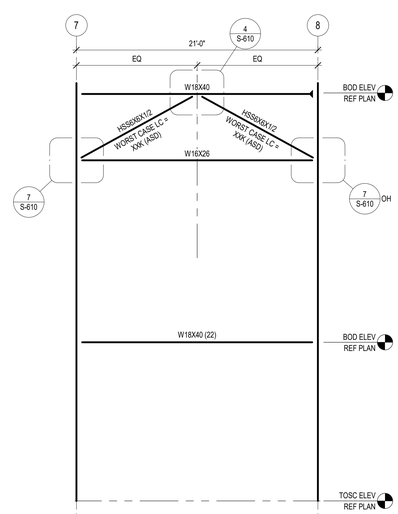

10 BRACE ELEVATION
3/16" = 1'-0"

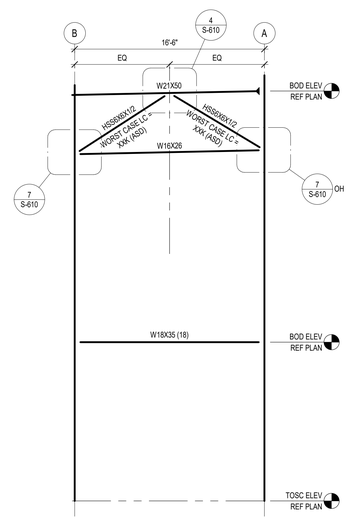

11 BRACE ELEVATION
3/16" = 1'-0"

Kubala ENGINEERS
Ph: (800)246-3674
www.kubalaengineers.com
TX. REG. NO. F-23612

PBK
www.pbk.com
TX FIRM: BR 1608
HOUSTON, TX
713-366-0608

PKG 3A GPHS - Fieldhouse

1000 Keene St.
Galena Park, TX 77547

CLIENT PROJECT NO: 240539

ISSUE FOR PROPOSAL

KEY PLAN

NORTH: PLAN TRUE

STATE OF TEXAS
JOHN R. KUBALA
106120
06/10/2025
Kubala Engineers
F-23612

CLIENT	
Galena Park ISD	
DATE 06/10/2025	PROJECT NUMBER 240539

DRAWING HISTORY

No.	Description	Date

CHECKED BY: SI

DRAWN BY: CML

TYPICAL WIND BRACING ELEVATIONS

S-600

Plot Stamp:
6/9/2025 5:32:49 PM

TYPICAL WIND BRACING DETAILS
S-610
FOR BLUEBEAM LABELING/OCR:

0"
1"

VERTICAL BRACE NOTES:

1. VERTICAL BRACE CONNECTIONS SHALL BE DESIGNED BY A PROFESSIONAL ENGINEER LICENSED IN THE STATE OF TEXAS WORKING FOR THE FABRICATOR. SUBMIT CALCULATIONS IN ACCORDANCE WITH THE CONTRACT DOCUMENTS.
2. MEMBER CONNECTIONS TO BE DESIGNED FOR FORCES (KIPS) SHOWN. FORCES INDICATED ARE UNFACTORED ACCORDING TO ALLOWABLE STRESS DESIGN METHOD (ASD). WHERE FORCES ARE NOT GIVEN, DESIGN FOR THE TENSILE CAPACITY OF THE DIAGONAL MEMBERS.
3. CONNECTIONS SHALL BE DESIGNED AND DETAILED TO TRANSFER FORCES BETWEEN MEMBERS WITHOUT ECCENTRICITY.
4. CONNECTIONS SHALL BE DESIGNED AND DETAILED FOR BOTH TENSION AND COMPRESSION PER FORCES PROVIDED.
5. FILLET WELD CONNECTIONS SHALL COMPLY WITH REQUIREMENTS NOTED IN AWS D1.1

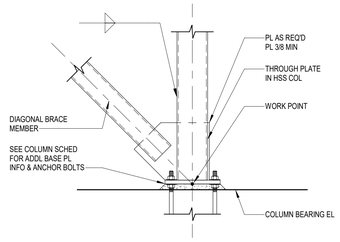

1 TYPICAL DETAIL OF VERTICAL BRACE CONNECTION
NO SCALE

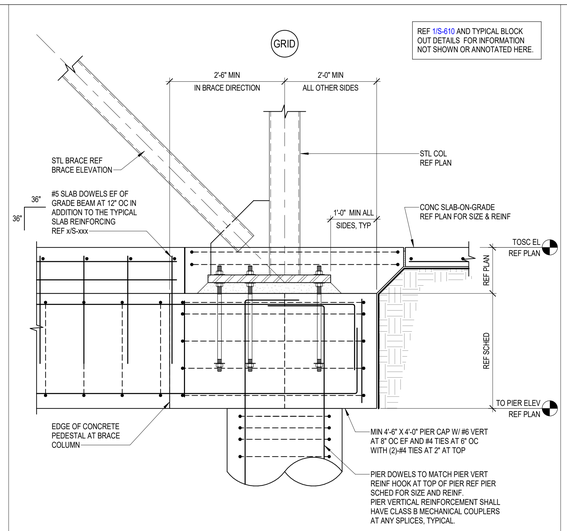

2 TYPICAL DETAIL OF VERTICAL BRACE CONNECTION
NO SCALE

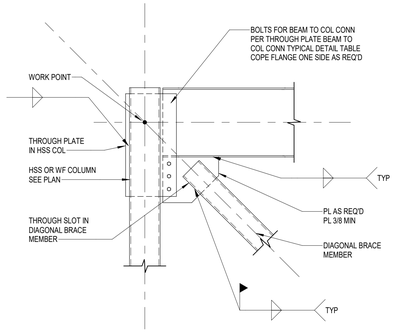

3 TYPICAL DETAIL OF VERTICAL BRACE CONNECTION
NO SCALE

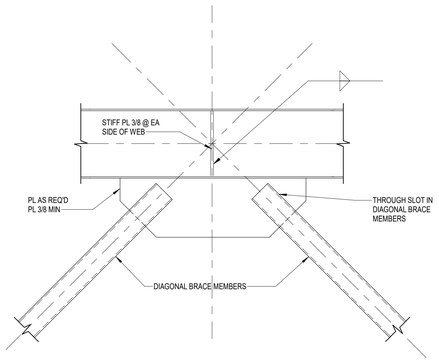

4 TYPICAL DETAIL OF VERTICAL BRACE CONNECTION
NO SCALE

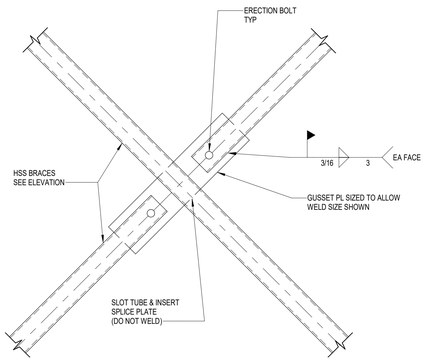

5 TYPICAL DETAIL OF TUBE X-BRACE
NO SCALE

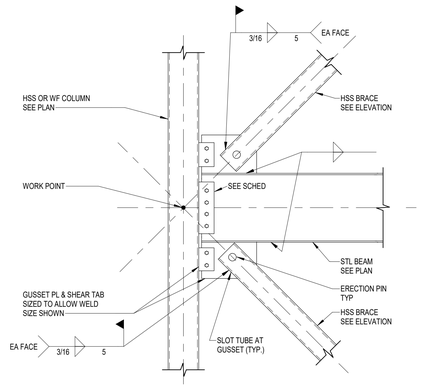

6 TYPICAL DETAIL OF TUBE K-BRACE AT WIDE FLANGE BEAM
NO SCALE

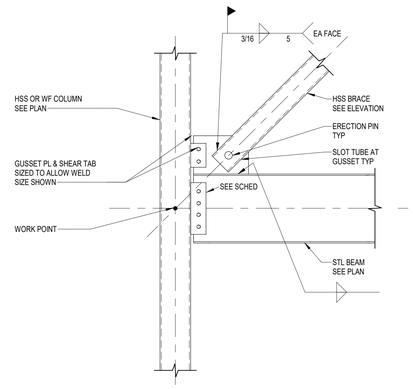

7 TYPICAL DETAIL OF TUBE K-BRACE AT WIDE FLANGE BEAM
NO SCALE

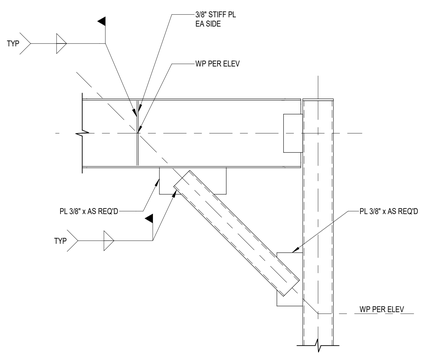

8 TYPICAL DETAIL OF VERTICAL BRACE CONNECTION
NO SCALE

Kubala ENGINEERS
Ph: (800)245-3674
www.kubalaengineers.com
TX. REG. NO. F-23612

PBK
www.pbk.com
TX FIRM: BR 1608
HOUSTON, TX
713-365-0608

PKG 3A GPHS - Fieldhouse

1000 Keene St.
Galena Park, TX 77547

CLIENT PROJECT NO: 240539

ISSUE FOR PROPOSAL

KEY PLAN
NORTH: PLAN TRUE

STATE OF TEXAS
JOHN R. KUBALA
106120
06/10/2025
Kubala Engineers
F-23612

CLIENT	
Galena Park ISD	
DATE 06/10/2025	PROJECT NUMBER 240539

DRAWING HISTORY

No.	Description	Date

CHECKED BY: SI
DRAWN BY: CML

TYPICAL WIND
BRACING DETAILS

S-610

Plot Stamp:
6/9/2025 5:32:50 PM

TYPICAL LADDER DETAILS
S-700
FOR BLUEBEAM LABELING/OCR:

0"
1"

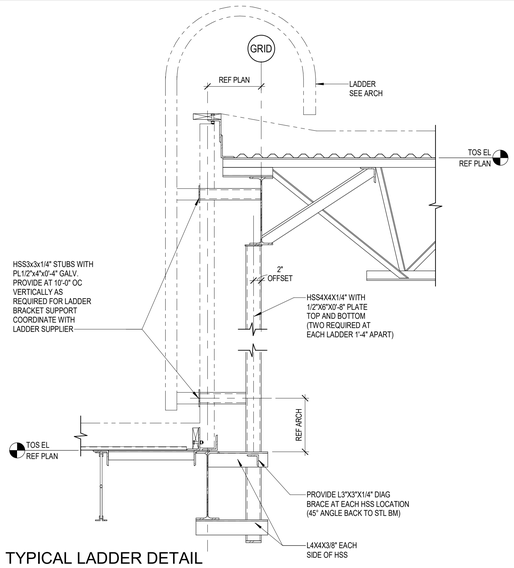

1 TYPICAL LADDER DETAIL
3/4" = 1'-0"

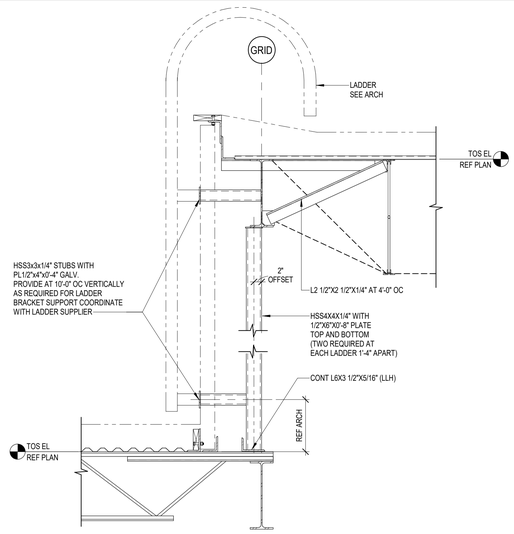

2 TYPICAL LADDER DETAIL
3/4" = 1'-0"

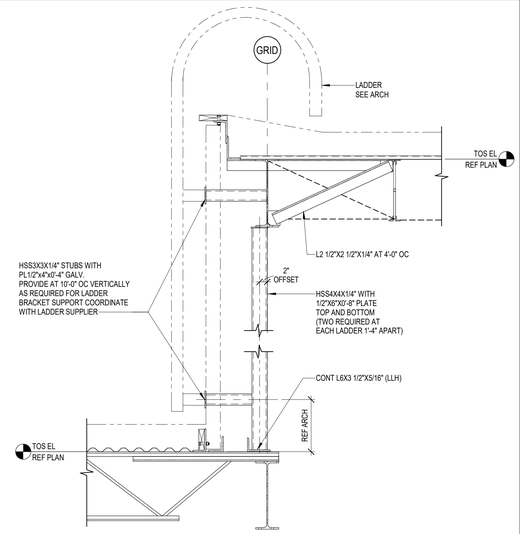

3 TYPICAL LADDER DETAIL
3/4" = 1'-0"

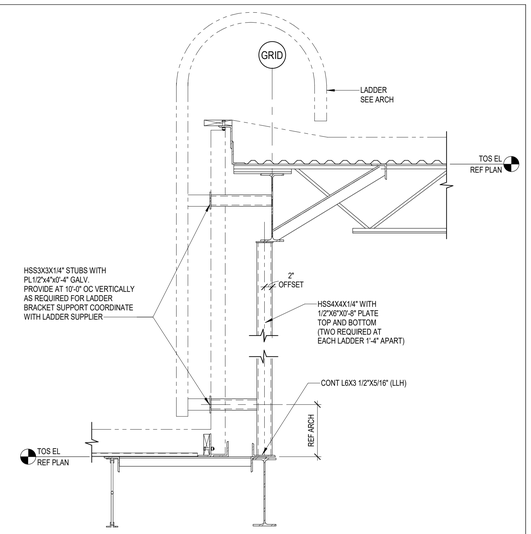

4 TYPICAL LADDER DETAIL
3/4" = 1'-0"

NOTE:

GC SHALL COORDINATE LADDER TYPE, LOCATION, CONNECTION, AND HEIGHT WITH ARCH PRIOR TO CONSTRUCTION.

Kubala ENGINEERS
Ph.: (800)246-3674
www.kubalaengineers.com
TX. REG. NO. F-23612

PBK
www.pbk.com
TX FIRM: BR 1608
HOUSTON, TX
713-366-0608

PKG 3A GPHS - Fieldhouse

1000 Keene St.
Galena Park, TX 77547

CLIENT PROJECT NO: 240539

ISSUE FOR PROPOSAL

KEY PLAN
NORTH: PLAN TRUE

STATE OF TEXAS
JOHN R. KUBALA
106120
06/10/2025
Kubala Engineers
F-23612

CLIENT	
Galena Park ISD	
DATE 06/10/2025	PROJECT NUMBER 240539

DRAWING HISTORY

No.	Description	Date

CHECKED BY: SI
DRAWN BY: CML

TYPICAL LADDER DETAILS

S-700

Plot Stamp:
6/9/2025 5:32:50 PM

LEVEL 1 - FLOOR PLAN
A-101
FOR BLUEBEAM LABELINGOOR:

GENERAL ARCH PLAN NOTES

1. DO NOT SCALE DRAWINGS, WRITTEN DIMENSIONS TAKE PRECEDENCE, CONTACT ARCHITECT IF CLARIFICATION IS NECESSARY IN ORDER TO DETERMINE THE INTENT OF THE CONTRACT DOCUMENTS.
2. DRAWINGS NOTED AS "N.T.S" OR "NTS" ARE NOT TO SCALE.
3. ALL DIMENSIONS ARE TO STRUCTURAL COLUMN LINES OR THE SURFACE OF PARTITION ASSEMBLY U.N.O.
4. FIELD VERIFY ALL DIMENSIONS AND EXISTING CONDITIONS BEFORE COMMENCING WORK. NOTIFY ARCHITECT OF ANY DISCREPANCIES PRIOR TO PROCEEDING WITH AFFECTED WORK.
5. NOTES OR DIMENSIONS NOTED AS "TYPICAL" OR "TYP." OR "TYP" SHALL APPLY TO CONDITIONS THAT ARE THE SAME OR SIMILAR.
6. DIMENSIONS NOTED AS "FIELD VERIFY" OR "V.I.F." OR "VIF" SHALL BE MEASURED AND CONFIRMED AT THE PROJECT SITE BY THE CONTRACTOR AND REVIEWED WITH THE ARCH. BEFORE INCORPORATING INTO THE WORK.
7. DIMENSIONS NOTED AS "CLEAR" OR "CLEAR INSIDE" OR "CLR" REQUIRE SPECIFIC COORDINATION AMONG DISCIPLINES AND OR MANUFACTURERS.
8. REFER TO PARTITION TYPES ON A-800 SERIES SHEETS FOR PARTITIONS LABELED ON THIS PLAN.
9. REFER TO DW SERIES SHEETS FOR PARTITIONS NOT LABELED ON THIS PLAN.
10. ALIGN FINISHED FACE OF WALLS WHERE WALL PARTITIONS OF DIFFERING THICKNESS ABUT AND OR ADJOIN IN THE SAME PLANE.
11. PROVIDE AND INSTALL CONTINUOUS REVEAL TRIM AT JOINT WHERE GYPSUM BOARD WALL PARTITIONS ABUT AND OR ADJOIN MASONRY WALL PARTITIONS IN THE SAME PLANE.
12. ALL INTERIOR CMU OUTSIDE CORNERS SHALL HAVE BULLNOSE U.N.O.
13. ALL DOORS SHALL BE SET 4 INCHES OFF THE ADJACENT PERPENDICULAR WALL ON THE HINGE SIDE OF THE DOOR U.N.O., NOTIFY ARCH. OF ANY DOOR-RELATED CONFLICTS, INCLUDING BUT NOT LIMITED TO CONFLICTS CONCERNING ACCESSIBILITY STANDARDS.
14. ALL DOOR THRESHOLDS AT ALL EXTERIOR DOORS SHALL BE SET IN FULL BED OF SEALANT.
15. COORDINATE ALL ROOF DRAIN LEADER LOCATIONS WITH FLOOR PLAN PRIOR TO FLOOR SLAB CONSTRUCTION.
16. ALL FLOOR SLOPES TO FLOOR DRAINS SHALL NOT EXCEED 1:48.
17. PROVIDE AND INSTALL SELF-LEVELING UNDERLAYMENT WHERE UNEVEN FLOOR SLAB EXISTS PRIOR TO INSTALLATION OF FLOOR FINISHES.
18. COORDINATE HOUSEKEEPING PAD LOCATIONS AND DIMENSIONS WITH EQUIPMENT TO BE INSTALLED.
19. ALL REQUIRED ACCESSIBLE CLEARANCES FOR ALL ITEMS, INCLUDING BUT NOT LIMITED TO ALL COUNTER TOPS, ALL PLUMBING FIXTURES, ALL DRINKING FOUNTAINS, ALL ELECTRIC WATER COOLERS, ALL LAVATORIES, ALL URINALS, ALL TOILETS SHALL BE STRICTLY ENFORCED.
20. APPLY BITUMINOUS COATING TO ALL CONCEALED STRUCTURAL STEEL MEMBERS AT ALL EXTERIOR CANOPY LOCATIONS.
21. REFER TO OTHER DISCIPLINE DOCUMENTS FOR ADDITIONAL SCOPE OF WORK.

KEYNOTE LEGEND

NUMBER	DESCRIPTION
01	4" X 4" CONCRETE CURB
02	DRAINAGE TROUGH RECESSED IN SLAB, RE: STRUCT.
03	4" CONCRETE BASE UNDER LOCKERS
07 71 23.DS6	6"X 6" PRE-FINISHED METAL DOWNSPOUT W/ HEAVY GAUGE BOOT, RE: CIVIL
09 90 00.P1	PAINT TYPE 1 - [FIELD]
10 21 23.CC1	CUBICLE CURTAIN, TYPE 1 - STANDARD
10 51 13.LC	LAUNDRY CHUTE W/ SLOPED HOOD
12 21 13.HB1	HORIZONTAL BLINDS, TYPE 1 - 2" FAUX WOOD BLINDS
12 24 00.S1M	MANUAL WINDOW SHADE UNIT MOUNTED BETWEEN JAMBS
12 24 00.S2M	MOTORIZED WINDOW SHADE UNIT MOUNTED [RECESSED IN CEILING or BETWEEN JAMBS or TO FACE OF GLAZING SYSTEM]
12 24 00.WS1	MANUAL WINDOW SHADE UNIT
12 36 00.SCT1	SOLID SURFACING COUNTERTOP

FLOOR PLAN LEGEND

- **10 65 13.4PSSM** METAL SHELVING, 72" H — SHELF LENGTH, SHELF WIDTH
- **10 11 00.MBP** PORCELAIN-ENAMEL MARKERBOARD — LENGTH
- **10 11 00.TKB** TACKBOARD — LENGTH
- CR — CARD READER, REFER TO TECHNOLOGY
- OP — LV AUTOMATIC OPERATOR, REFER TO TECHNOLOGY
- F.E.C. — **10 44 00.FE#** FIRE EXTINGUISHER CABINET
- A.E.D. — **10 43 00.AED** AUTOMATED EXTERNAL DEFIBRILLATOR
- **11 52 00.PC1** PROJECTOR, CEILING MOUNTED (OFOI)

NOTE:
1. REFER TO DW SERIES SHEETS FOR DEMOUNTABLE PARTITION INFORMATION.
2. DOORS AND WINDOWS LOCATED WITHIN DEMOUNTABLE PARITIONS ARE INCLUDED WITH THOSE PARTITIONS AND SHOWN FOR REFERENCE ONLY.
3. MILLWORK ADJACENT TO DEMOUNTABLE PARTITIONS IS INCLUDED WITH THOSE PARTITIONS AND SHOWN FOR REFERENCE ONLY.
4. REFERENCE SCOPE PLAN FOR DIRTT PARTITION SCOPE AND ALTERNATE 1- CONVENTIONAL CONSTRUCTION

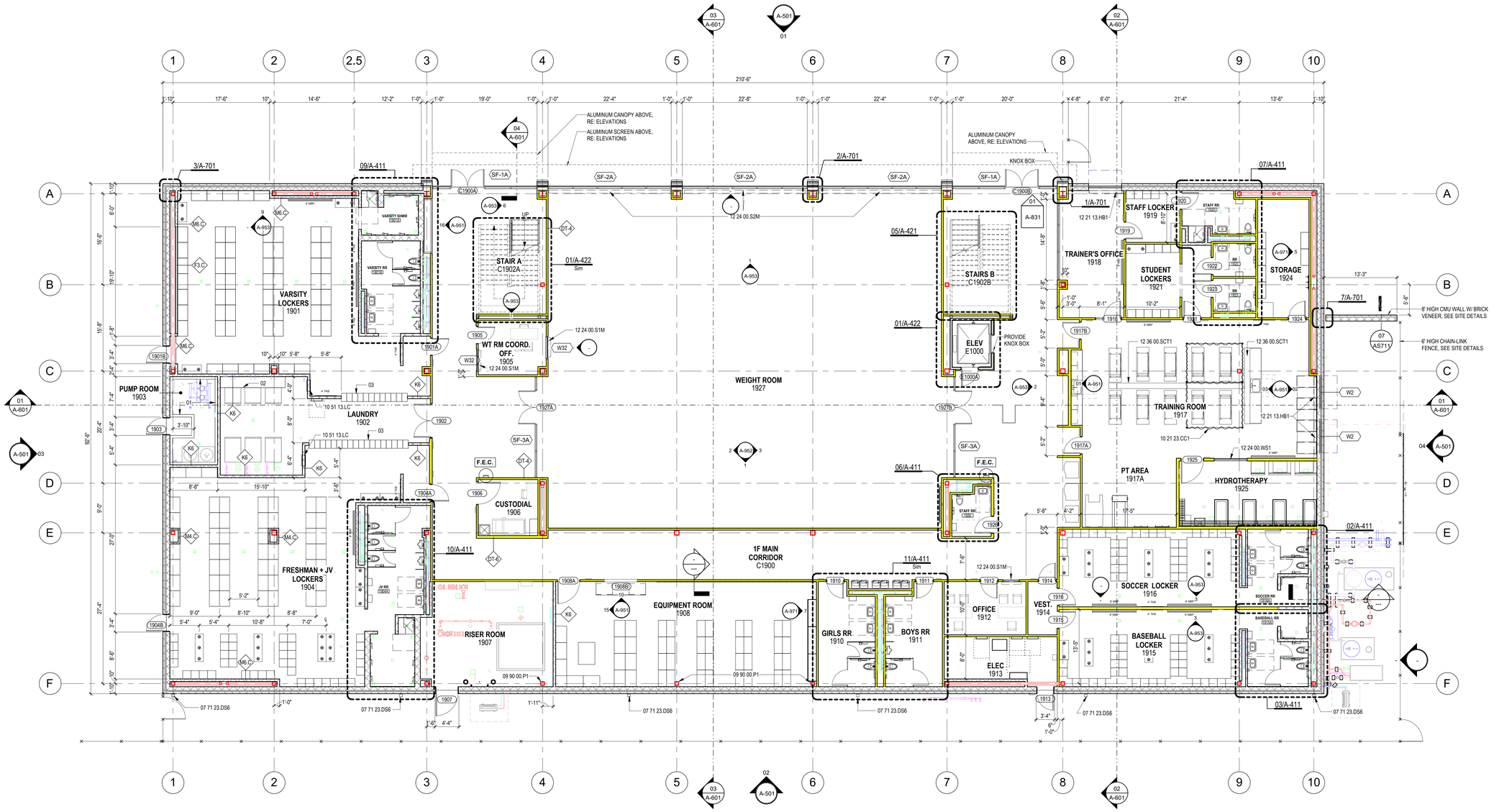

1 LEVEL 1 - FLOOR PLAN
1/8" = 1'-0"

PBK
www.pbk.com
TX FIRM: BR 1608
HOUSTON, TX
713-965-0608

PKG 3A - GPHS NEW FIELDHOUSE

1000 Keene St,
Galena Park, TX 77547

CLIENT PROJECT NO: 240539

ISSUE FOR PROPOSAL

KEY PLAN
NORTH: PLAN TRUE

REGISTERED ARCHITECT JAMES LEGGETT 25572 STATE OF TEXAS

6/10/2025

CLIENT	
Galena Park ISD	
DATE June 10, 2025	PROJECT NUMBER 240539

DRAWING HISTORY

No.	Description	Date

CHECKED BY: JL
DRAWN BY: JL

LEVEL 1 - FLOOR PLAN

A-101

Plot Stamp:
6/10/2025 5:34:26 PM

LEVEL 2 - FLOOR PLAN
A-102
FOR BLUEBEAM LABELINGOOR:

GENERAL ARCH PLAN NOTES

1. DO NOT SCALE DRAWINGS, \RRITTEN DIMENSIONS TAKE PRECEDENCE, CONTACT ARCHITECT IF CLARIFICATION IS NECESSARY IN ORDER TO DETERMINE THE INTENT OF THE CONTRACT DOCUMENTS.
2. DRAWINGS NOTED AS "N.T.S" OR "NTS" ARE NOT TO SCALE.
3. ALL DIMENSIONS ARE TO STRUCTURAL COLUMN LINES OR THE SURFACE OF PARTITION ASSEMBLY U.N.O.
4. FIELD VERIFY ALL DIMENSIONS AND EXISTING CONDITIONS BEFORE COMMENCING WORK. NOTIFY ARCHITECT OF ANY DISCREPANCIES PRIOR TO PROCEEDING WITH AFFECTED WORK.
5. NOTES OR DIMENSIONS NOTED AS "TYPICAL" OR "TYP." OR "TYP" SHALL APPLY TO CONDITIONS THAT ARE THE SAME OR SIMILAR.
6. DIMENSIONS NOTED AS "FIELD VERIFY" OR "V.I.F." OR "VIF" SHALL BE MEASURED AND CONFIRMED AT THE PROJECT SITE BY THE CONTRACTOR AND REVIEWED WITH THE ARCH. BEFORE INCORPORATING INTO THE WORK.
7. DIMENSIONS NOTED AS "CLEAR" OR "CLEAR INSIDE" OR "CLR" REQUIRE SPECIFIC COORDINATION AMONG DISCIPLINES AND OR MANUFACTURERS.
8. REFER TO PARTITION TYPES ON A-800 SERIES SHEETS FOR PARTITIONS LABELED ON THIS PLAN.
9. REFER TO DW SERIES SHEETS FOR PARTITIONS NOT LABELED ON THIS PLAN.
10. ALIGN FINISHED FACE OF WALLS WHERE WALL PARTITIONS OF DIFFERING THICKNESS ABUT AND OR ADJOIN IN THE SAME PLANE.
11. PROVIDE AND INSTALL CONTINUOUS REVEAL TRIM AT JOINT WHERE GYPSUM BOARD WALL PARTITIONS ABUT AND OR ADJOIN MASONRY WALL PARTITIONS IN THE SAME PLANE.
12. ALL INTERIOR CMU OUTSIDE CORNERS SHALL HAVE BULLNOSE U.N.O.
13. ALL DOORS SHALL BE SET 4 INCHES OFF THE ADJACENT PERPENDICULAR WALL ON THE HINGE SIDE OF THE DOOR U.N.O., NOTIFY ARCH. OF ANY DOOR-RELATED CONFLICTS, INCLUDING BUT NOT LIMITED TO CONFLICTS CONCERNING ACCESSIBILITY STANDARDS.
14. ALL DOOR THRESHOLDS AT ALL EXTERIOR DOORS SHALL BE SET IN FULL BED OF SEALANT.
15. COORDINATE ALL ROOF DRAIN LEADER LOCATIONS WITH FLOOR PLAN PRIOR TO FLOOR SLAB CONSTRUCTION.
16. ALL FLOOR SLOPES TO FLOOR DRAINS SHALL NOT EXCEED 1:48.
17. PROVIDE AND INSTALL SELF-LEVELING UNDERLAYMENT WHERE UNEVEN FLOOR SLAB EXISTS PRIOR TO INSTALLATION OF FLOOR FINISHES.
18. COORDINATE HOUSEKEEPING PAD LOCATIONS AND DIMENSIONS WITH EQUIPMENT TO BE INSTALLED.
19. ALL REQUIRED ACCESSIBLE CLEARANCES FOR ALL ITEMS, INCLUDING BUT NOT LIMITED TO ALL COUNTER TOPS, ALL PLUMBING FIXTURES, ALL DRINKING FOUNTAINS, ALL ELECTRIC WATER COOLERS, ALL LAVATORIES, ALL URINALS, ALL TOILETS SHALL BE STRICTLY ENFORCED.
20. APPLY BITUMINOUS COATING TO ALL CONCEALED STRUCTURAL STEEL MEMBERS AT ALL EXTERIOR CANOPY LOCATIONS.
21. REFER TO OTHER DISCIPLINE DOCUMENTS FOR ADDITIONAL SCOPE OF WORK.

KEYNOTE LEGEND

NUMBER	DESCRIPTION
05 50 00.LDR	STEEL LADDER
10 22 39.MBD	MARKERBOARD PANEL FACING
12 21 13.HB1	HORIZONTAL BLINDS, TYPE 1 - 2" FAUX WOOD BLINDS
12 24 00.SZM	MOTORIZED WINDOW SHADE UNIT MOUNTED [RECESSED IN CEILING or BETWEEN JAMBS or TO FACE OF GLAZING SYSTEM]

FLOOR PLAN LEGEND

10 65 13.APSSM
METAL SHELVING, 72" H
SHELF LENGTH
SHELF WIDTH

10 11 00.MBP
PORCELAIN-ENAMEL MARKERBOARD
LENGTH

10 11 00.TKB
TACKBOARD
LENGTH

CR — CARD READER
REFER TO TECHNOLOGY

OP — LV AUTOMATIC OPERATOR
REFER TO TECHNOLOGY

F.E.C. — **10 44 00.FE#**
FIRE EXTINGUISHER CABINET

A.E.D. — **10 43 00.AED**
AUTOMATED EXTERNAL DEFIBRILLATOR

11 52 00.PC1
PROJECTOR, CEILING MOUNTED (OFOI)

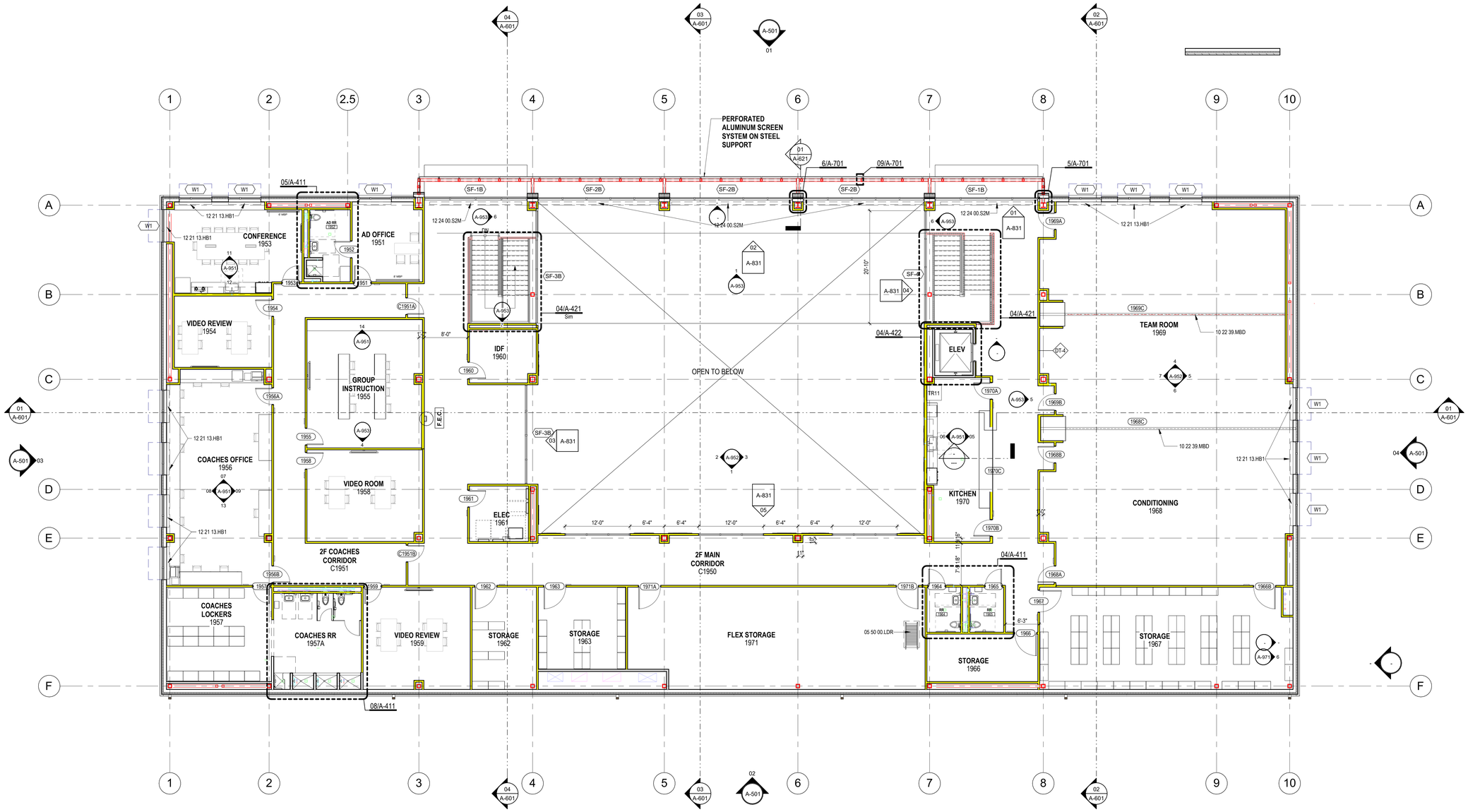

1 LEVEL 2 - FLOOR PLAN
1/8" = 1'-0"

Plot Stamp:
6/10/2025 5:34:29 PM

PBK
www.pbk.com
TX FIRM: BR 1608
HOUSTON, TX
713-965-0608

PKG 3A - GPHS NEW FIELDHOUSE

1000 Keene St.
Galena Park, TX 77547

CLIENT PROJECT NO: 240539

ISSUE FOR PROPOSAL

Galena Park ISD
EXCELLENCE IN ALL FOR ALL WE ARE

KEY PLAN
NORTH: PLAN TRUE

REGISTERED ARCHITECT
JAN LEGG CRAFT
25872
STATE OF TEXAS

6/10/2025

CLIENT	
Galena Park ISD	
DATE: June 10, 2025	PROJECT NUMBER: 240539

DRAWING HISTORY

No.	Description	Date

CHECKED BY: Checker
DRAWN BY: Author

LEVEL 2 - FLOOR PLAN

A-102

LEVEL 1 - CEILING PLAN
A-201
FOR BLUEBEAM LABELINGDOOR:

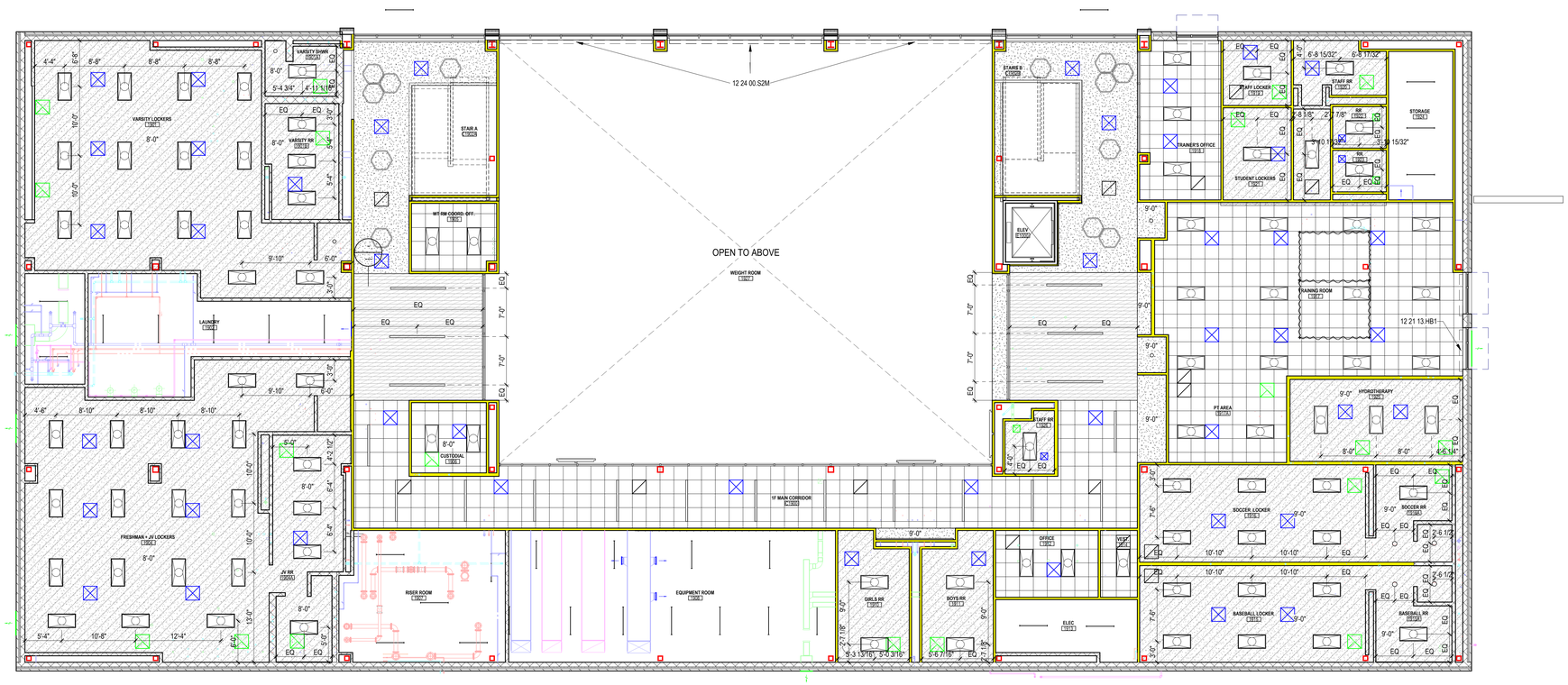

1 LEVEL 1 - CEILING PLAN
1/8" = 1'-0"

GENERAL CEILING PLAN NOTES

1. ALL CEILING HEIGHTS ARE FROM THE MAIN FLOOR LEVEL WITHIN THE ROOM AND OR SPACE, AND ARE NOT FROM AN ELEVATED FLOOR LEVEL, AND ARE NOT FROM A RECESSED FLOOR LEVEL.
2. NO FIRE SPRINKLER HEADS ARE SHOWN ON ARCHITECTURAL CEILING PLANS. ALL SPRINKLER HEADS SHALL BE CENTERED WITHIN CEILING TILES U.N.O.
3. ONLY CEILING MOUNTED FIXTURES AND EQUIPMENT IS SHOWN ON ARCHITECTURAL CEILING PLANS. REFER TO INTERIOR ELEVATIONS FOR WALL MOUNTED FIXTURES. REFER TO MEPT DOCUMENTS FOR ADDITIONAL INFORMATION CONCERNING CEILING MOUNTED FIXTURES AND OR WALL MOUNTED FIXTURES.
4. CEILING MOUNTED LIGHT FIXTURES ARE SHOWN FOR LOCATION PURPOSES ONLY. COORDINATE WITH ELECTRICAL DOCUMENTS FOR LIGHT FIXTURE DESIGNATIONS.
5. CEILING MOUNTED LIGHT FIXTURES WITHIN FIRE RATED CEILING ASSEMBLIES SHALL HAVE LIGHT FIXTURE PROTECTION AND BE TENTED OR OTHERWISE FIRE-RATED TO MATCH CEILING ASSEMBLY FIRE RATING.
6. VERIFY LOCATIONS OF ALL CEILING ACCESS PANELS WITH MEPT DOCUMENTS. COORDINATE LOCATIONS OF CEILING ACCESS PANELS WITH ARCHITECT PRIOR TO INSTALLATION. CEILING ACCESS PANEL FIRE RATINGS SHALL MATCH CEILING ASSEMBLY FIRE RATINGS.
7. REFER TO WALL SECTIONS FOR WALL-CEILING INTERFACE.
8. ALL EXTERIOR WALLS SHALL EXTEND TO DECK AND BE SEALED, INCLUDING WALLS ADJACENT TO SOFFITS AND ABOVE DOORS AND WINDOWS. THESE EXTERIOR WALLS SHALL BE DAMPROOFED AND INSULATED.
9. COORDINATE LOCATION OF ALL LIGHT FIXTURES, EXIT SIGNS, GRILLES, AND SPEAKERS WITH MEPT DRAWINGS.
10. REFER TO MEP FOR ALL MECHANICAL ROOM LIGHTING AND ANY FIXTURES NOT SHOWN ON ARCHITECTURAL RCP.
11. PAINT ALL DUCTWORK, CONDUITS, PIPING, GYP BOARD CEILING FURRDOWNS, STRUCTURAL BEAMS, STRUCTURAL JOISTS, STRUCTURAL COLUMNS, METAL ROOF DECK, AND OTHER STRUCTURAL MEMBERS - BOTH EXTERIOR AND INTERIOR - WHERE EXPOSED TO VIEW. COORDINATE PAINT COLOR(S) WITH THE ARCHITECT.
12. LIGHTING FIXTURES TO BE CENTERED AND SPACED EQUALLY UNLESS NOTED OTHERWISE.
13. CEILINGS AT ALL SHOWERS SHALL BE EPOXY PAINTED MOISTURE RESISTANT GYP BOARD.
14. ALL CEILING HEIGHT ON THIS SHEET, EXCEPT FOR FURR-DOWNS, SHALL BE AT 10'-0" UNLESS NOTED OTHERWISE.
15. ALL WALL-MOUNTED LIGHT FIXTURES ARE TO BE MOUNTED AT ___ A.F.F. TO THE TOP OF THE FIXTURE, UNLESS NOTED OTHERWISE.
16. CONDUIT AND / OR RACEWAY MOUNTED TO STRUCTURAL MEMBERS IN EXPOSED-TO-STRUCTURE SPACES SHALL BE INSTALLED TIGHT TO DECK AND PARALLEL OR PERPENDICULAR TO BUILDING LINES. DO NOT INSTALL CONDUIT, RACEWAY, OR WIRING PERPENDICULAR TO JOISTS NEAR BOTTOM CHORD LEVEL.

KEYNOTE LEGEND

NUMBER	DESCRIPTION
12 21 13.HB1	HORIZONTAL BLINDS, TYPE 1 - 2" FAUX WOOD BLINDS
12 24 00.S2M	MOTORIZED WINDOW SHADE UNIT MOUNTED (RECESSED IN CEILING or BETWEEN JAMBS or TO FACE OF GLAZING SYSTEM)

CEILING FIXTURE LEGEND

- LINEAR RECESSED LIGHT FIXTURE *RE: ELECTRICAL*
- RECESSED CAN LIGHT *RE: ELECTRICAL*
- 2' x 4' RECESSED LIGHT FIXTURE *RE: ELECTRICAL*
- PROJECTOR
- HEXAGON PENDANT FIXTURE *RE: ELECTRICAL*
- SUPPLY AIR CEILING DIFFUSER *RE: MECHANICAL*
- SUSPENDED LINEAR FIXTURE *RE: ELECTRICAL*
- RETURN AIR GRILLE / REGISTER *RE: MECHANICAL*
- EXHAUST GRILLE / REGISTER *RE: MECHANICAL*

CEILING MATERIALS LEGEND

- **09 51 00.ACS1** ACOUSTICAL CEILING PANEL SYSTEM, CONTINUOUS ABOVE DIRTT WALL SYSTEMS TYPE 1 - STANDARD, 2'x2' GRID
- **09 21 16.GCX** GYPSUM CEILING BOARD, NON-RATED
- **09 21 16.GMS** GYPSUM CEILING BOARD, MOISTURE-RESISTANT WITH EPOXY PAINT
- **09 54 26.WCS1** WOOD GRILLE PANELS
- EXPOSED CEILING STRUCTURE TO BE PAINTED

PBK
www.pbk.com
TX FIRM: BR 1608
HOUSTON, TX
713-965-0608

PKG 3A - GPHS NEW FIELDHOUSE

1000 Keene St.
Galena Park, TX 77547

CLIENT PROJECT NO: 240539

ISSUE FOR PROPOSAL

KEY PLAN
NORTH: PLAN TRUE

REGISTERED ARCHITECT JAN LEGLOSTAY 25872 STATE OF TEXAS
6/10/2025

CLIENT	
Galena Park ISD	
DATE June 10, 2025	PROJECT NUMBER 240539

DRAWING HISTORY

No.	Description	Date

CHECKED BY: Checker
DRAWN BY: Author

LEVEL 1 - CEILING PLAN

A-201

Plot Stamp:
6/10/2025 5:34:32 PM

LEVEL 2 - CEILING PLAN
A-202
FOR BLUEBEAM LABELING/OCR:

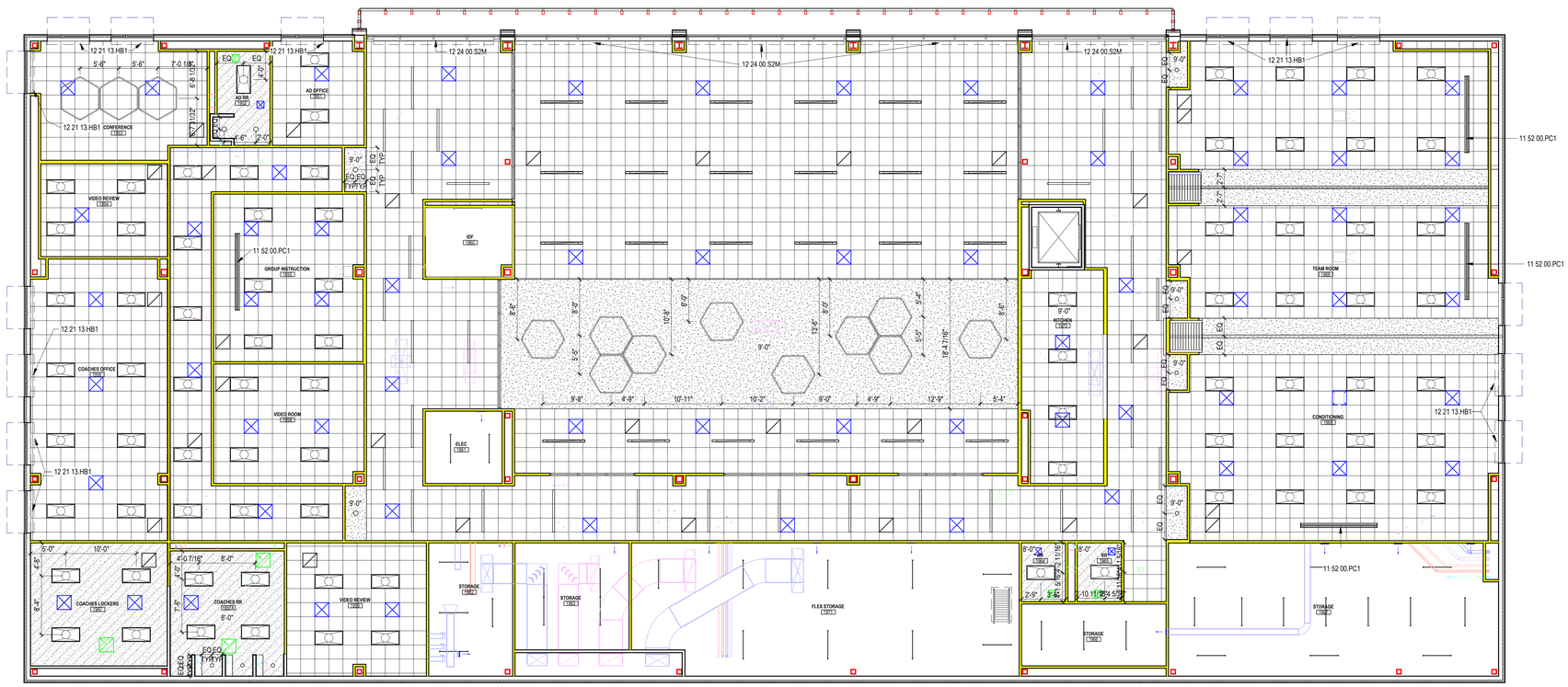

1 LEVEL 2 - CEILING PLAN
1/8" = 1'-0"

GENERAL CEILING PLAN NOTES

1. ALL CEILING HEIGHTS ARE FROM THE MAIN FLOOR LEVEL WITHIN THE ROOM AND OR SPACE, AND ARE NOT FROM AN ELEVATED FLOOR LEVEL, AND ARE NOT FROM A RECESSED FLOOR LEVEL.
2. NO FIRE SPRINKLER HEADS ARE SHOWN ON ARCHITECTURAL CEILING PLANS. ALL SPRINKLER HEADS SHALL BE CENTERED WITHIN CEILING TILES U N O.
3. ONLY CEILING MOUNTED FIXTURES AND EQUIPMENT IS SHOWN ON ARCHITECTURAL CEILING PLANS. REFER TO INTERIOR ELEVATIONS FOR WALL MOUNTED FIXTURES. REFER TO MEPT DOCUMENTS FOR ADDITIONAL INFORMATION CONCERNING CEILING MOUNTED FIXTURES AND OR WALL MOUNTED FIXTURES.
4. CEILING MOUNTED LIGHT FIXTURES ARE SHOWN FOR LOCATION PURPOSES ONLY. COORDINATE WITH ELECTRICAL DOCUMENTS FOR LIGHT FIXTURE DESIGNATIONS.
5. CEILING MOUNTED LIGHT FIXTURES WITHIN FIRE RATED CEILING ASSEMBLIES SHALL HAVE LIGHT FIXTURE PROTECTION AND BE TENTED OR OTHERWISE FIRE-RATED TO MATCH CEILING ASSEMBLY FIRE RATING.
6. VERIFY LOCATIONS OF ALL CEILING ACCESS PANELS WITH MEPT DOCUMENTS. COORDINATE LOCATIONS OF CEILING ACCESS PANELS WITH ARCHITECT PRIOR TO INSTALLATION. CEILING ACCESS PANEL FIRE RATINGS SHALL MATCH CEILING ASSEMBLY FIRE RATINGS.
7. REFER TO WALL SECTIONS FOR WALL-CEILING INTERFACE.
8. ALL EXTERIOR WALLS SHALL EXTEND TO DECK AND BE SEALED, INCLUDING WALLS ADJACENT TO SOFFITS AND ABOVE DOORS AND WINDOWS. THESE EXTERIOR WALLS SHALL BE DAMPROOFED AND INSULATED.
9. COORDINATE LOCATION OF ALL LIGHT FIXTURES, EXIT SIGNS, GRILLES, AND SPEAKERS WITH MEPT DRAWINGS.
10. REFER TO MEP FOR ALL MECHANICAL ROOM LIGHTING AND ANY FIXTURES NOT SHOWN ON ARCHITECTURAL RCP.
11. PAINT ALL DUCTWORK, CONDUITS, PIPING, GYP BOARD CEILING FURRDOWNS, STRUCTURAL BEAMS, STRUCTURAL JOISTS, STRUCTURAL COLUMNS, METAL ROOF DECK, AND OTHER STRUCTURAL MEMBERS - BOTH EXTERIOR AND INTERIOR - WHERE EXPOSED TO VIEW. COORDINATE PAINT COLOR(S) WITH THE ARCHITECT.
12. LIGHTING FIXTURES TO BE CENTERED AND SPACED EQUALLY UNLESS NOTED OTHERWISE.
13. CEILINGS AT ALL SHOWERS SHALL BE EPOXY PAINTED MOISTURE RESISTANT GYP BOARD.
14. ALL CEILING HEIGHT ON THIS SHEET, EXCEPT FOR FURR-DOWNS, SHALL BE AT 10'-0" UNLESS NOTED OTHERWISE.
15. ALL WALL-MOUNTED LIGHT FIXTURES ARE TO BE MOUNTED AT ___ A.F.F. TO THE TOP OF THE FIXTURE, UNLESS NOTED OTHERWISE.
16. CONDUIT AND / OR RACEWAY MOUNTED TO STRUCTURAL MEMBERS IN EXPOSED-TO-STRUCTURE SPACES SHALL BE INSTALLED TIGHT TO DECK AND PARALLEL OR PERPENDICULAR TO BUILDING LINES. DO NOT INSTALL CONDUIT, RACEWAY, OR WIRING PERPENDICULAR TO JOISTS NEAR BOTTOM CHORD LEVEL.

KEYNOTE LEGEND

NUMBER	DESCRIPTION
11 52 00.PC1	PROJECTOR, CEILING-MOUNTED (OFOI)
12 21 13.HB1	HORIZONTAL BLINDS, TYPE 1 - 2" FAUX WOOD BLINDS
12 24 00.S2M	MOTORIZED WINDOW SHADE UNIT MOUNTED [RECESSED IN CEILING or BETWEEN JAMBS or TO FACE OF GLAZING SYSTEM]

CEILING FIXTURE LEGEND

- LINEAR RECESSED LIGHT FIXTURE *RE: ELECTRICAL*
- 2' x 4' RECESSED LIGHT FIXTURE *RE: ELECTRICAL*
- HEXAGON PENDANT FIXTURE *RE: ELECTRICAL*
- SUPPLY AIR CEILING DIFFUSER *RE: MECHANICAL*
- RETURN AIR GRILLE / REGISTER *RE: MECHANICAL*
- EXHAUST GRILLE / REGISTER *RE: MECHANICAL*
- RECESSED CAN LIGHT *RE: ELECTRICAL*
- PROJECTOR
- SUSPENDED LINEAR FIXTURE *RE: ELECTRICAL*

CEILING MATERIALS LEGEND

- **09 51 00.ACS1** ACOUSTICAL CEILING PANEL SYSTEM, CONTINUOUS ABOVE DIRTT WALL SYSTEMS TYPE 1 - STANDARD, 2'x2' GRID
- **09 21 16.GCX** GYPSUM CEILING BOARD, NON-RATED
- **09 21 16.GMS** GYPSUM CEILING BOARD, MOISTURE-RESISTANT WITH EPOXY PAINT
- **09 54 26.WCS1** WOOD GRILLE PANELS
- EXPOSED CEILING STRUCTURE TO BE PAINTED

PBK
HOUSTON, TX
713-965-0608
TX FIRM: BR 1608
www.pbk.com

PKG 3A - GPHS NEW FIELDHOUSE

1000 Keene St.
Galena Park, TX 77547

CLIENT PROJECT NO: 240539

ISSUE FOR PROPOSAL

Galena Park ISD

KEY PLAN
NORTH: PLAN TRUE

REGISTERED ARCHITECT JAN LEPICOVSKY 25572 STATE OF TEXAS

6/10/2025

CLIENT	
Galena Park ISD	
DATE June 10, 2025	PROJECT NUMBER 240539

DRAWING HISTORY

No.	Description	Date

CHECKED BY: Checker
DRAWN BY: Author

LEVEL 2 - CEILING PLAN

A-202

Plot Stamp:
6/10/2025 5:34:34 PM

OVERALL ROOF PLAN
A-301
FOR BLUEBEAM LABELINGOOR:

0"
1"

1. CONTRACTOR SHALL REVIEW AND COORDINATE WITH ARCHITECTURAL, MEP, AND STRUCTURAL DOCUMENTS TO ASCERTAIN EXACT CONDITIONS AND COMPONENTS RELATED TO THE WORK DESCRIBED BY THESE DOCUMENTS. ALL WORK SHALL BE IN ACCORDANCE WITH ACCEPTED MANUFACTURER'S PRINTED INSTRUCTIONS AND NRCA STANDARDS.
2. DIMENSIONS, DETAILS, EQUIPMENT SIZE AND LOCATION SHOWN IN THESE CONSTRUCTION DOCUMENTS ARE FOR CONVEYANCE OF DESIGN INTENT ONLY. EXACT SIZE, LOCATION, TYPE OF MATERIAL AND TYPE OF CONSTRUCTION OF EXISTING CONDITIONS ARE THE RESPONSIBILITY OF THE CONTRACTOR TO ASCERTAIN AND CONFIRM.
3. INDICATED ROOF HEIGHTS ARE GENERAL IN NATURE. RE: STRUCTURAL FOR FRAMING HEIGHTS.
4. REFER TO NOMENCLATURE FOR TYPE OF ROOF SYSTEM. AREAS ARE MARKED WITH DESIGNATED LETTER ON ROOF PLAN.
5. NOTE THAT THE DETAILS DRAWN ARE GENERIC IN NATURE AND ARE NOT NECESSARILY LOCATED AND KEYED TO THE ROOF PLANS.
6. ALL NEW / EXISTING CRICKETS AND TAPERED INSULATION SHALL BE INSTALLED WITH A FINISHED 1/2" PER FOOT MIN. SLOPE. CRICKET THE UP SLOPE SIDE OF ALL SQUARE CURBS AND PROJECTIONS OVER 20" IN WIDTH.
7. ALL CURB MOUNTED HVAC UNITS, EQUIPMENT, ETC. SHALL HAVE A MINIMUM 10" CURB HEIGHT.
8. WORK TO ANY UTILITY CONDUIT OR PIPE SHALL BE PERFORMED BY SPECIFIC LICENSED SUBCONTRACTORS SPECIALIZING IN HVAC, PLUMBING AND ELECTRICAL WORK. PERMITS AND INSPECTIONS ARE REQUIRED.
9. UNLESS INDICATED OTHERWISE ON THE CONSTRUCTION DOCUMENTS, ALL EXISTING JOINTS / AREA DIVIDERS / CURB MOUNTED EQUIPMENT / SKYLIGHTS SHALL BE MIN. 10" ABOVE ROOF DECK.
10. ALL SOIL STACK FLASHING SHALL BE A MIN. 10" ABOVE FINISHED ROOF SURFACE. COUPLE PVC PIPE ABOVE DECK AND COUPLE CAST IRON PIPE BELOW DECK. PROPERLY SUPPORT PIPE BELOW ROOF DECK FROM LATERAL MOVEMENT.
11. ALL PIPING/ CONDUITS/ ETC. SHALL BE A MIN. 10" ABOVE ROOF SURFACE. PROVIDE PORTABLE PIPE HANGERS WITH PROTECTION PADS AS SPECIFIED. MEP CONTRACTORS SHALL PROVIDE SUPPORTS FOR UTILITY LINES.
12. PROVIDE "MERCURY" GAS LINE TEST (COORDINATE WITH OWNER AND ARCHITECT FOR WITNESS OF THE TEST). REPAIR ANY FOUND LEAKS AND RETEST AS REQUIRED.
13. PROVIDE SHEET METAL HOODED (WITH METAL FACE CLOSURE) CAPS, WOOD CURB, BOX COVER AT ALL GAS AND WATER PIPE ROOF PENETRATIONS AS DETAILED AND SPECIFIED. PROVIDE POSITIVE SLOPE AWAY FROM FACE COVER.
14. PROVIDE WALKWAY PROTECTION PADS AS SPECIFIED AROUND ALL ROOF HATCHES, HVAC ROOFTOP UNITS, DOORS THAT OPEN ONTO ROOF AND AT TOP AND BOTTOM OF ALL ROOF TOP ACCESS LOCATIONS.
15. ISOLATE ALL HEAT PIPES / FLUES AS DETAILED AND RECOMMENDED AND OUTLINED IN THE NRCA MANUAL FOR HOT STACK FLASHING AND AS DETAILED.
16. ALL OUTSIDE AIR INTAKES SHALL BE COVERED TO ELIMINATE ODORS AND FUMES FROM ENTERING INTO THE BUILDING DURING CONSTRUCTION WORK.
17. AFTER SUBSTANTIAL COMPLETION, THE GENERAL CONTRACTOR SHALL EXAMINE AND CLEAN NEW DRAIN LINES AND NEW AND EXISTING (AS APPLICABLE) GUTTERS OF DEBRIS AND BLOCKAGE, FLUSH WITH WATER TO ENSURE THAT DRAINS AND GUTTERS FLOW FREELY.
18. PRIOR TO COMMENCEMENT OF WORK, COORDINATE WALK OF ENTIRE ROOF WITH ROOFING MANUFACTURER'S TECHNICAL REPRESENTATIVE TO IDENTIFY AND LOCATE ALL AREAS OF HIGH SLOPE OR OTHER CONDITIONS WHICH MIGHT REQUIRE SPECIAL PROCEDURES FOR SYSTEM ATTACHMENT.
19. REFER TO MEP DRAWINGS FOR SIZE AND LOCATION OF NEW ROOF DECK PENETRATIONS AND ROOF TOP EQUIPMENT.
20. INSTALL NEW SPLASH PAN AT ALL LOCATIONS WHERE ROOF DRAINAGE DISCHARGES ONTO ROOF AREA. INSTALL NEW SPLASH BLOCKS WHERE ROOF DRAINAGE DISCHARGES ON GROUND.
21. REFER TO GENERAL DETAILS FOR TYPICAL SPLASH PAN, ROOF DRAIN AND OVERFLOW DRAIN DETAILS.
22. GENERAL CONTRACTOR TO ENSURE ALL ROOFTOP PENETRATIONS (SOIL STACKS, VENTS, ETC.) ARE INSTALLED MIN. 4'-0" FROM OTHER DECK PENETRATIONS, RISE WALLS, AND ROOF EDGE. MECHANICAL EQUIPMENT TO BE LOCATED MIN. 10'-0" FROM PERIMETER EDGE AND NO CLOSER THAN 4'-0" FROM RISE WALLS, OR ANY OTHER ROOF PENETRATION.
23. LOCATE PERIMETER DRAINS MAX. 6'-0" FROM EDGE TYPICAL UNLESS SHOWN OTHERWISE. (GENERAL CONTRACTOR TO COORDINATE WITH ROOFING AND PLUMBING CONTRACTOR.)
24. THROUGH WALL BASE FLASHING MIN. HEIGHT 10" AND MAX. HEIGHT 20" FROM FINISH DECK. DO NOT STEP THROUGH WALL FLASHING CLOSER THAN 5'-0" FROM CORNERS.
25. GENERAL CONTRACTOR SHALL COORDINATE LOCATION AND ORIENTATION OF ROOF HATCH AND ACCESS LADDER.
26. GENERAL CONTRACTOR SHALL COORDINATE ALL TOP OF STEEL TO TOP OF BLOCKING AND SUBSTRATE BOARD DIMENSIONS IN FIELD PRIOR TO ORDERING MATERIALS. NO ADDITIONAL COMPENSATION WILL BE GRANTED FOR FAILURE TO COORDINATE THESE DIMENSIONS.
27. GENERAL CONTRACTOR SHALL VERIFY ROOF SLOPES WILL PROPERLY DRAIN AS SHOWN. TAPERED INSULATION HATCHING SHOWN IS NOT INTENDED TO ILLUSTRATE THE ENTIRE LIMITS OF TAPERED INSULATION. ROOF AREAS NOT SLOPED BY STRUCTURE SHALL BE SLOPED WITH TAPERED INSULATION TO ACHIEVE PROPER DRAINAGE.
28. PROVIDE ONE WAY MOISTURE VENTS AT ALL LIGHTWEIGHT CONCRETE OR GYPSUM OVER POUR AREAS AS RECOMMENDED BY THE ROOFING SYSTEM MANUFACTURER.
29. PAINT ALL EXPOSED GAS PIPE.

30 GENERAL NOTES (NEW)
N.T.S.

KEYNOTE LEGEND

NUMBER	DESCRIPTION
05 50 00.LDR	STEEL LADDER
07 72 33.RS1	ROOF HATCH

NEW ROOF DRAIN
EXIST. ROOF DRAIN
OF OVERFLOW DRAINS
FLANGE VENT
PITCH PAN
VENT THROUGH ROOF
WALL DRAIN
CURB MOUNTED VENT
CURB MOUNTED INTAKE
ABANDONED CURB TO BE REMOVED / PATCHED
A ABANDON EQUIP.
GUY WIRE
POWER VENT
HEATER VENT
BOILER VENT
TURBINE VENT
PB PIPE BOX
GOOSE NECK VENT
AC CURB MOUNTED AC
SPLASH BLOCK
SPLASH PAN
A/C ON POSTS
ROOF HATCH
SL SKYLIGHTS
ANTENNA
SATELLITE DISH
S SCUPPER
G GUTTER
DS DOWNSPOUT
WALL LADDER
SWING LADDER
EXHAUST AND SUPPLY FAN ON SINGLE CURB
RIDGE LINE
EXISTING AREA TO REMAIN -NIC
NEW TAPERED INSULATION / CRICKET
NEW LT. WT. CONCRETE INSULATION/ CRICKET
A1 ROOF AREA DESIGNATION
TAPERED LIGHT WEIGHT CONCRETE
DESIGNATES EXTENTS OF WORK IDENTIFIED BY KEYED NOTES
AD AREA DIVIDER
EJ EXPANSION JOINT
C CONDENSATE LINE
W WATER LINE
E ELEC. LINE
G GAS LINE

26 ROOFING - LEGEND (DEMO/EXIST)
N.T.S.

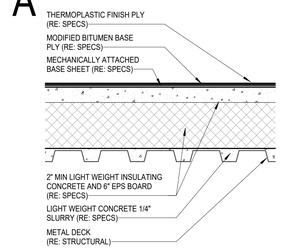

25 ROOFING (MB) - NOMENCLATURE
N.T.S.

ROOF SCHEDULE

MARK	AREA	NOMENCLATURE	Comments
A1	5,274 SF	A	
A2	15,000 SF	A	
Grand total	20,274 SF		

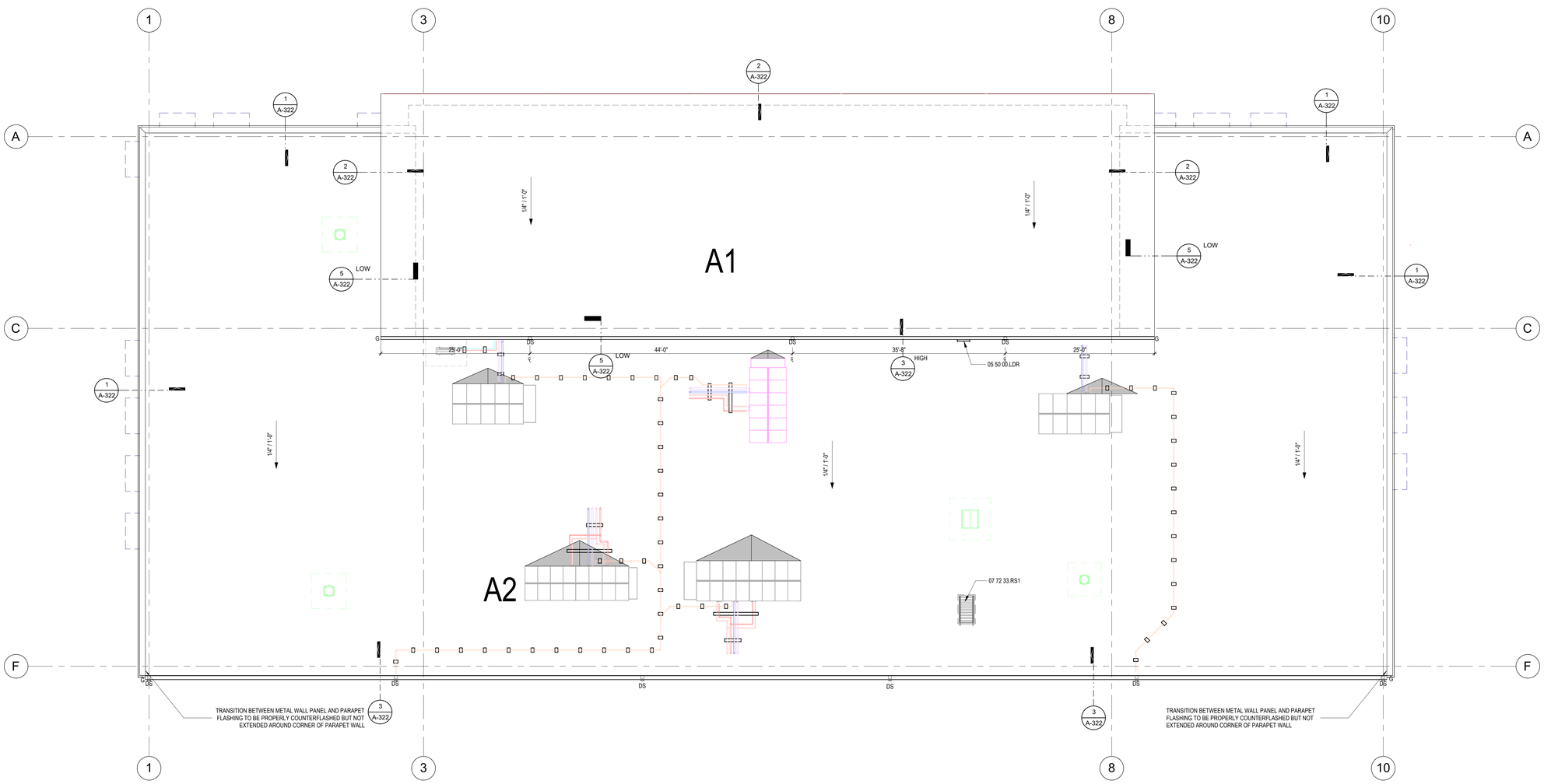

6 OVERALL ROOF PLAN
1/8" = 1'-0"

PBK
www.pbk.com
TX FIRM: BR 1608
HOUSTON, TX
713-965-0608

PKG 3A - GPHS NEW FIELDHOUSE
1000 Keene St.
Galena Park, TX 77547

CLIENT PROJECT NO: 240539
ISSUE FOR PROPOSAL

KEY PLAN
NORTH: PLAN TRUE

REGISTERED ARCHITECT JAN LEPICOVSKY 25872 STATE OF TEXAS
6/10/2025

CLIENT	
Galena Park ISD	
DATE June 10, 2025	PROJECT NUMBER 240539

DRAWING HISTORY

No.	Description	Date

CHECKED BY: SL & BG
DRAWN BY: DAS

OVERALL ROOF PLAN

A-301

Plot Stamp:
6/10/2025 5:34:36 PM

ROOF DETAILS
A-322
FOR BLUEBEAM LABELING/OCR:

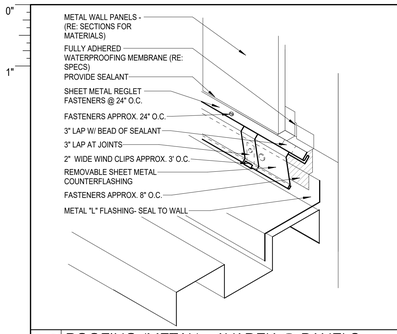

30 ROOFING (METAL) - AVADEK @ PANELS
N.T.S.

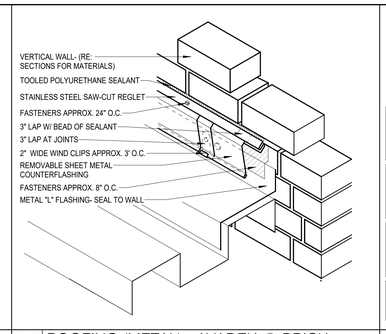

29 ROOFING (METAL) - AVADEK @ BRICK
N.T.S.

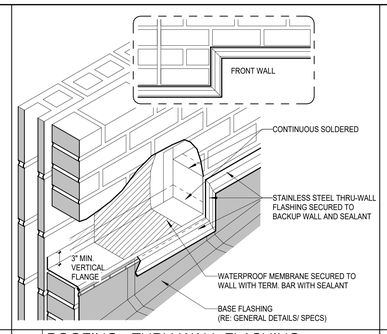

28 ROOFING - THRU-WALL FLASHING
N.T.S.

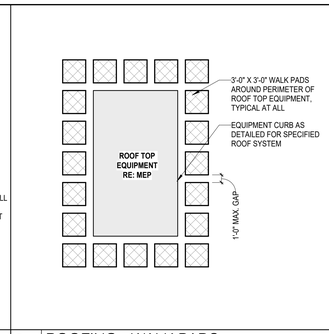

27 ROOFING - WALK PADS
N.T.S.

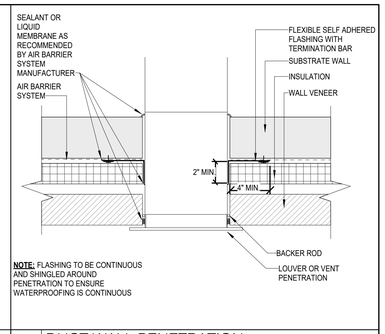

25 DUCT WALL PENETRATION
N.T.S.

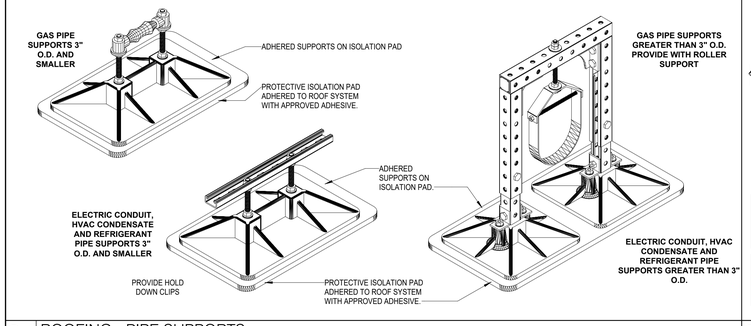

24 ROOFING - PIPE SUPPORTS
N.T.S.

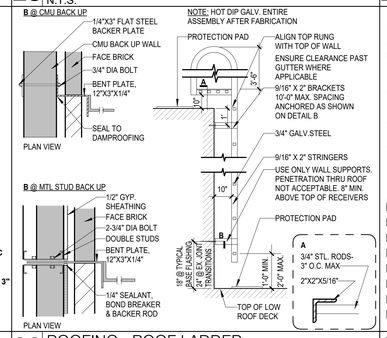

22 ROOFING - ROOF LADDER
N.T.S.

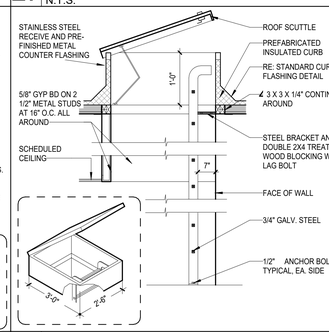

21 ROOFING (HYBRID) - ROOF HATCH
N.T.S.

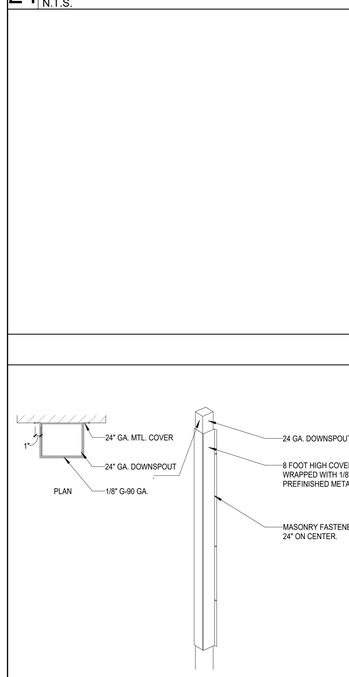

12 ROOFING - DOWNSPOUT PROTECTION
N.T.S.

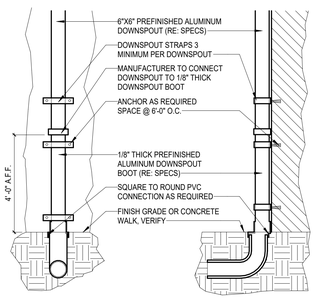

11 ROOFING - DOWNSPOUT TO BOOT
N.T.S.

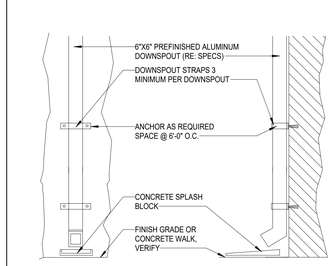

10 ROOFING - DOWNSPOUT
N.T.S.

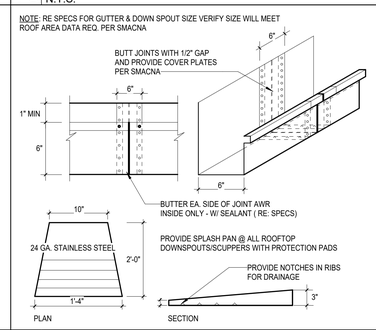

9 GUTTER JOINT AND SPLASH PANS
N.T.S.

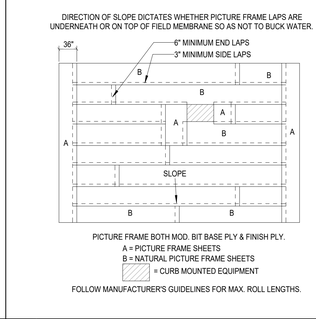

8 ROOFING (MB) - PICTURE FRAME DETAIL
N.T.S.

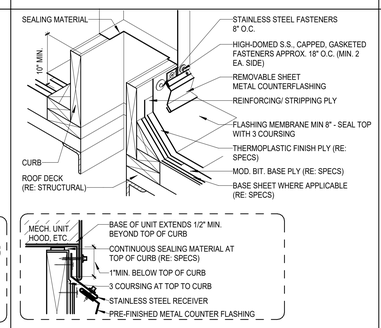

14 ROOFING (HYBRID) - EQUIPMENT CURB
N.T.S.

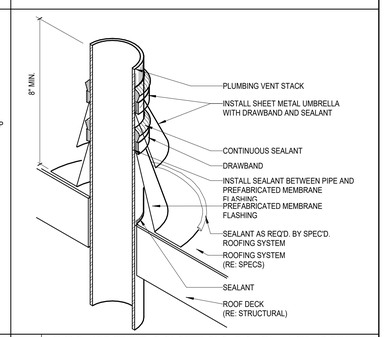

13 ROOFING (HYBRID) - PIPE PENETRATION
N.T.S.

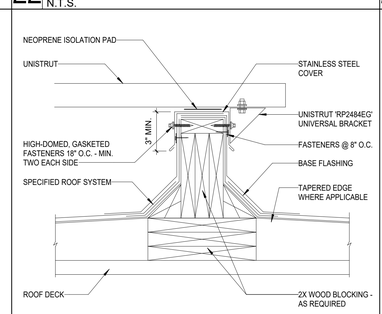

16 ROOFING (HYBRID) - EQUIPMENT SUPPORT
N.T.S.

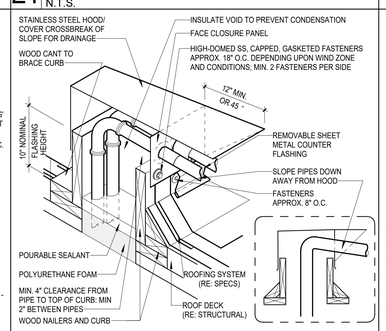

15 ROOFING (HYBRID) - HOODED CURB
N.T.S.

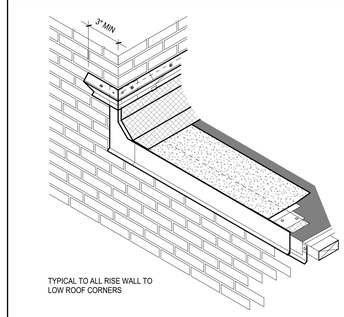

6 ROOFING (HYBRID) - END WALL
N.T.S.

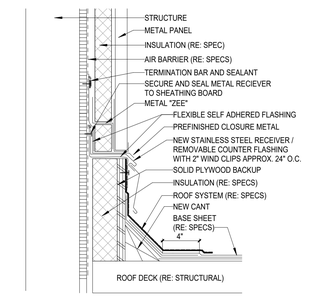

5 (HYBRID) - BASE FLASHING @ PANEL
N.T.S.

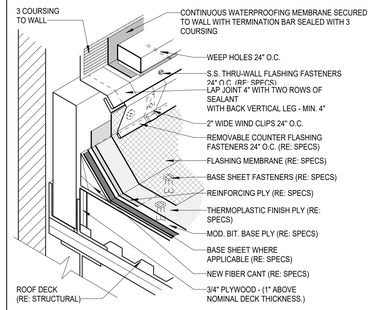

4 ROOFING (HYBRID) - BASE FLASHING
N.T.S.

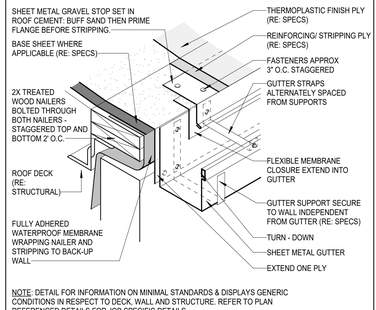

3 ROOFING (HYBRID) - ROOF EDGE W/GUTTER
N.T.S.

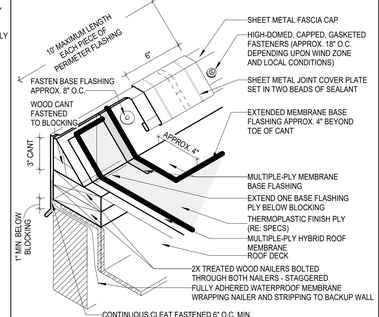

2 ROOFING (MB) - RAISED EDGE
N.T.S.

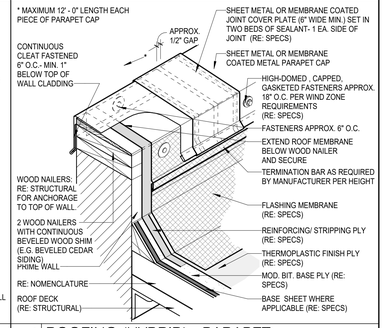

1 ROOFING (HYBRID) - PARAPET
N.T.S.

PBK
www.pbk.com
TX FIRM: BR 1608
HOUSTON, TX
713-965-0608

PKG 3A - GPHS NEW FIELDHOUSE
1000 Keene St.
Galena Park, TX 77547

CLIENT PROJECT NO: 240539

ISSUE FOR PROPOSAL

Galena Park ISD
GP
EXCELLENCE IN ALL FOR ALL SINCE 1927

REGISTERED ARCHITECT
JAN LEGG OTTEN
25872
STATE OF TEXAS
6/10/2025

CLIENT	
Galena Park ISD	
DATE June 10, 2025	PROJECT NUMBER 240539

DRAWING HISTORY

No.	Description	Date

CHECKED BY: SL & BG
DRAWN BY: DAS

ROOF DETAILS

A-322

Plot Stamp:
6/10/2025 5:34:38 PM

ENLARGED TOILET PLANS
A-411

FOR BLUEBEAM LABELING/OOR:

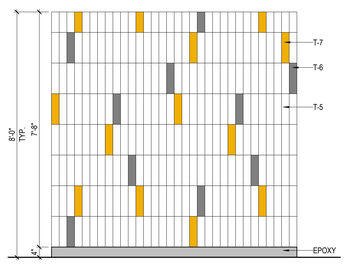

12 RESTROOM TILE TYP.
1/2" = 1'-0"

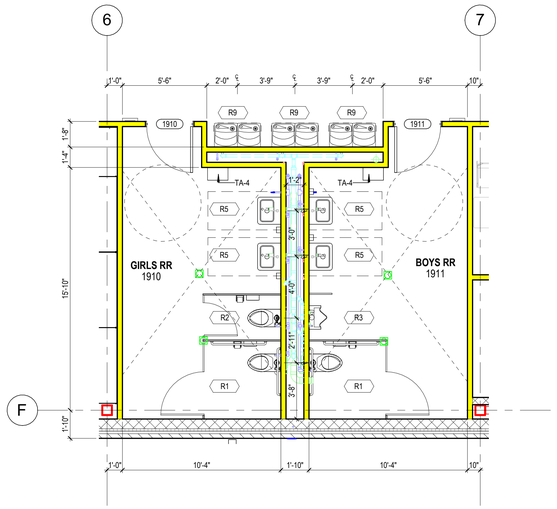

11 1910 & 1911 - ENLARGED RESTROOMS
1/4" = 1'-0"

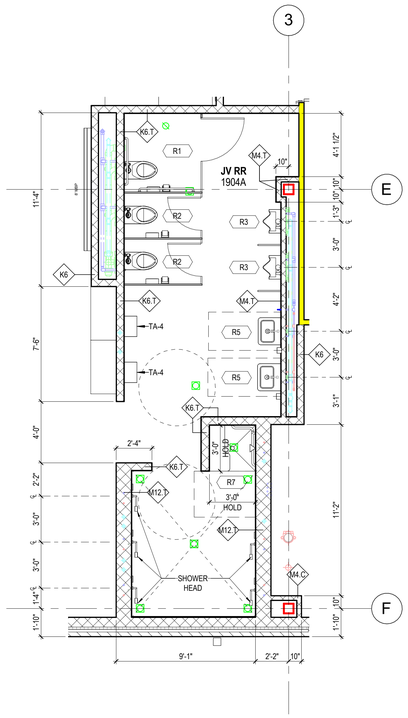

10 1904A - JV ENLARGED RESTROOM
1/4" = 1'-0"

KEYNOTE LEGEND

NUMBER	DESCRIPTION
08 43 13.SFI	INTERIOR ALUMINUM-FRAMED STOREFRONT SYSTEM
10 12 00.DCR	RECESSED DISPLAY CASE
10 51 13.B	VARSITY SINGLE-TIER LOCKER, 22"x34"

GUIDANCE NOTE (DELETE BEFORE PRINTING):

REVIEW AND COORDINATE WITH SPECIFICATIONS AND SPREADSHEET

TOILET ACCESSORIES

LABEL	DESCRIPTION	NOTES
TA1C	SOAP DISPENSER, COUNTER-MOUNTED, TYPICAL	
TA1W	SOAP DISPENSER, WALL-MOUNTED, TYPICAL	
TA2	LAVATORY MIRROR, TYPICAL	NOTE 5
TA2F	FULL-LENGTH MIRROR	
TA3	TOILET PAPER DISPENSER, TYPICAL	
TA4	PAPER TOWEL DISPENSER, TYPICAL	
TA5	GRAB BARS, AT TYPICAL WHEELCHAIR ACCESSIBLE WATERCLOSET, TYPICAL	
TA6	SANITARY NAPKIN/TAMPON VENDOR, TYPICAL	
TA7	SANITARY NAPKIN DISPOSAL, TYPICAL	
TA8	SHELF WITH MOP AND BROOM HOLDERS AND HOOKS, TYPICAL	
TA9	GRAB BARS, ACCESSIBLE SHOWER, TYPICAL	
TA10A	FOLDING BENCH, ADULT HEIGHT	
TA11	CLOTHING HOOK, TYPICAL	NOTE 6
TA12	SHOWER CURTAINS, RODS AND HOOKS, TYPICAL	
TA13	ELECTRIC HAND DRYER, TYPICAL	
TA14	PAPER TOWEL DISPENSER/WASTE RECEPTACLE, TYPICAL	
TA15	GRAB BARS, AT AMBULATORY ACCESSIBLE WATERCLOSET	
TA16C	BABY CHANGING STATION	
TA16A	ADULT CHANGING STATION	
TA17R	TRASH RECEPTACLE, RECESSED	
TA17U	TRASH RECEPTACLE, UNDERCOUNTER	
TA18	VERTICAL GRAB BAR (AT ACCESSIBLE ICC A117.1 TOILETS)	
TA19	WATERCLOSET COVER DISPENSER	
TA20	FOLDING UTILITY SHELF	

NOTES:
1. ALL TOILET ACCESSORIES SHALL BE CONTRACTOR FURNISHED AND CONTRACTOR INSTALLED U.N.O.
2. COORDINATE FINAL LOCATIONS WITH ARCHITECT PRIOR TO INSTALLATION.
3. VERIFY ALL HEIGHTS OF ACCESSORIES TO COMPLY WITH ALL APPLICABLE ACCESSIBILITY REQUIREMENTS.
4. REFER TO ALL FINISHES AND COLORS IN FINISH SCHEDULE, VERIFY ALL PATTERNS WITH ARCHITECT
5. ALIGN MIRROR ON CENTER OF LAVATORY.
6. ONE (1) HOOK SHALL BE INSTALLED INSIDE DOOR AT EACH TOILET PARTITION. ONE HOOK INSIDE DOOR AT SINGLE TOILET ROOMS AND ONE HOOK AT EACH SHOWER.

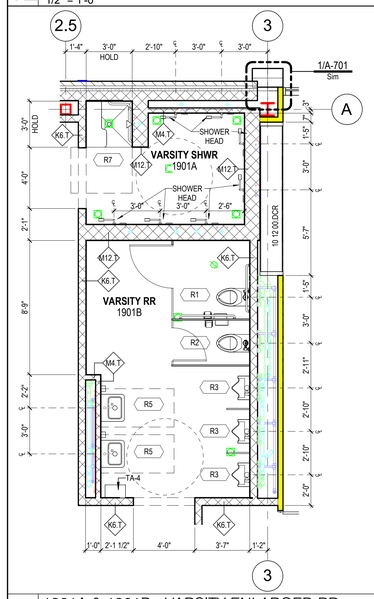

09 1901A & 1901B - VARSITY ENLARGED RR
1/4" = 1'-0"

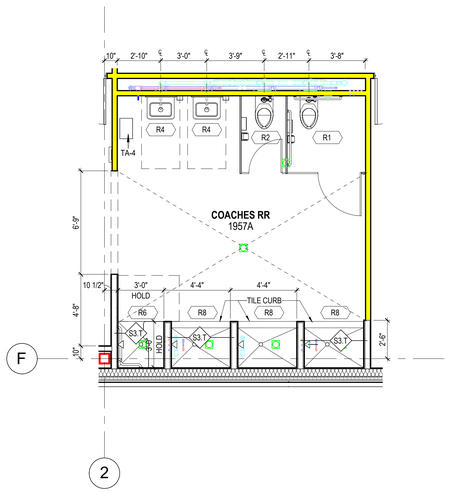

08 1957A - ENLARGED COACHES RESTROOM
1/4" = 1'-0"

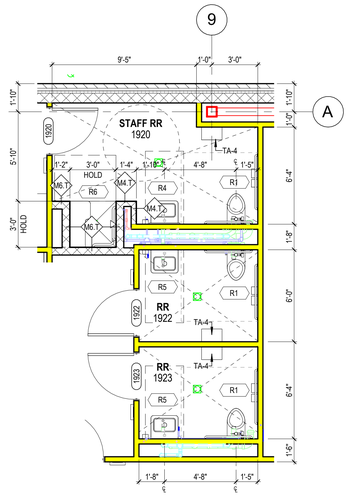

07 A124 - ENLARGED TRAINER STAFF RR
1/4" = 1'-0"

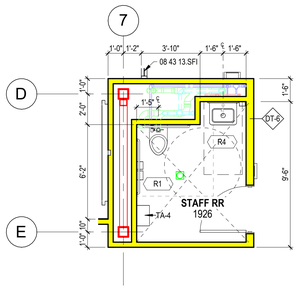

06 1926 - ENLARGED RESTROOM
1/4" = 1'-0"

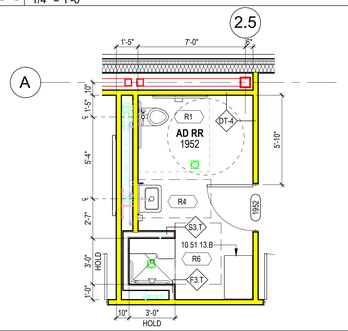

05 1952 - ENLARGED AD RR
1/4" = 1'-0"

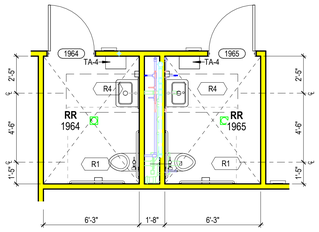

04 1964 & 1965 - ENLARGED RESTROOMS
1/4" = 1'-0"

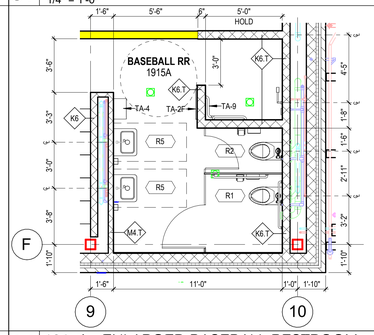

03 1915A - ENLARGED BASEBALL RESTROOM
1/4" = 1'-0"

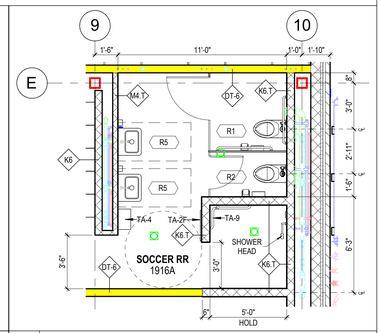

02 1916A - SOCCER RESTROOM
1/4" = 1'-0"

ENLARGED TOILET PLAN LEGEND

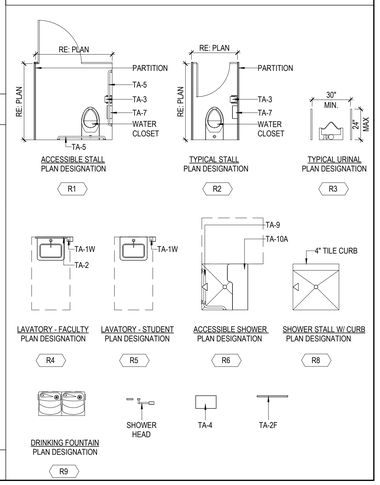

PBK

www.pbk.com
TX FIRM: BR 1608
HOUSTON, TX
713-965-0608

PKG 3A - GPHS NEW FIELDHOUSE

1000 Keene St,
Galena Park, TX 77547

CLIENT PROJECT NO: 240539

ISSUE FOR PROPOSAL

KEY PLAN
NORTH: PLAN TRUE

6/10/2025

CLIENT	
Galena Park ISD	
DATE	PROJECT NUMBER
June 10, 2025	240539

DRAWING HISTORY

No.	Description	Date

CHECKED BY: JL
DRAWN BY: JL

ENLARGED TOILET PLANS

A-411

Plot Stamp:
6/10/2025 5:34:43 PM

ENLARGED STAIR PLANS AND SECTIONS
A-421

FOR BLUEBEAM LABELING/OCR:

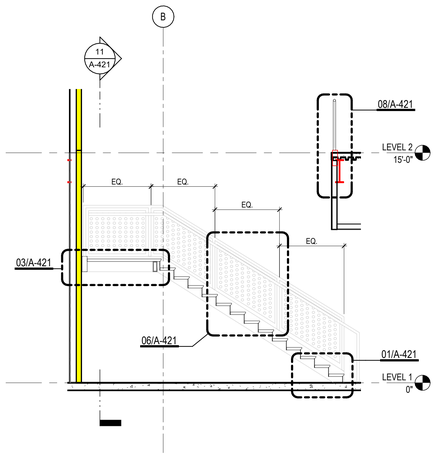

13 STAIR SECTION
1/4" = 1'-0"

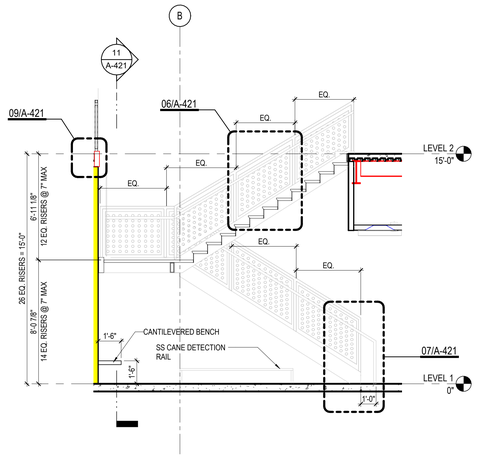

12 STAIR SECTION
1/4" = 1'-0"

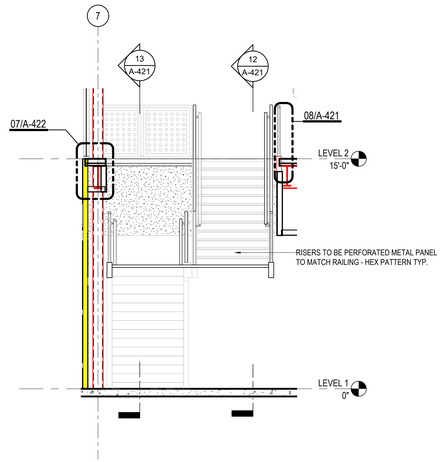

11 STAIR SECTION
1/4" = 1'-0"

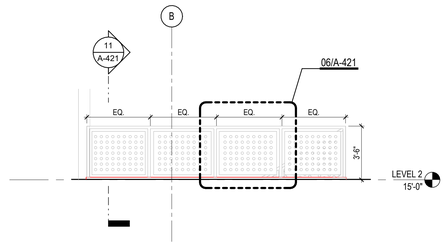

10 GUARDRAIL ELEVATION - LEVEL 2
N.T.S.

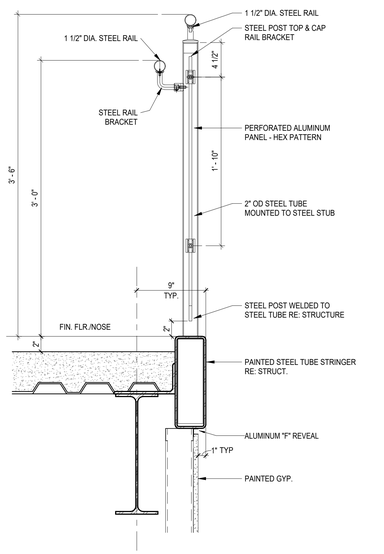

08 GUARDRAIL SECTION - SLAB EDGE
1 1/2" = 1'-0"

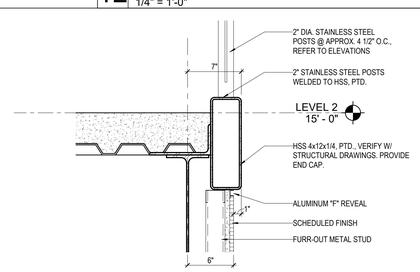

09 SECTION DETAIL
1 1/2" = 1'-0"

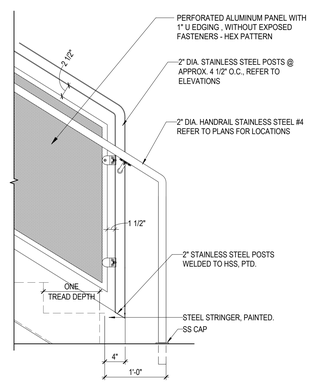

07 STAIR DETAIL - BOTTOM HANDRAIL
1" = 1'-0"

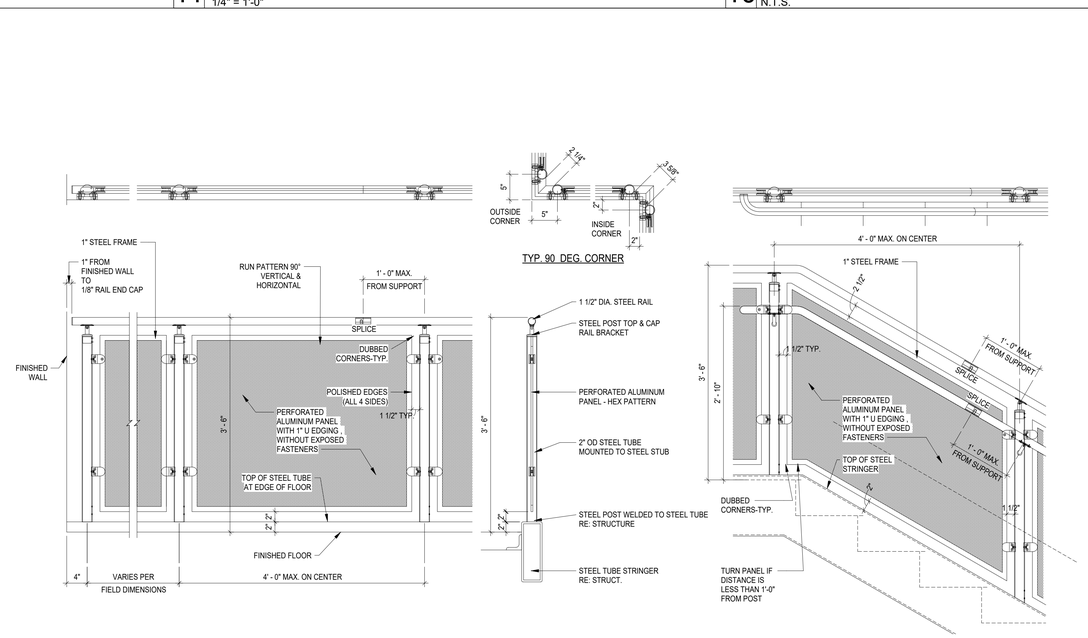

06 STAIR DETAIL - ORNAMENTAL HANDRAIL
1" = 1'-0"

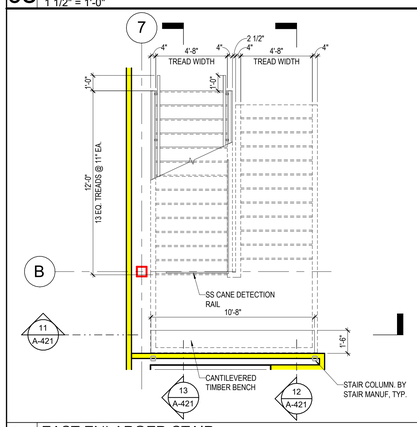

05 EAST ENLARGED STAIR
1/4" = 1'-0"

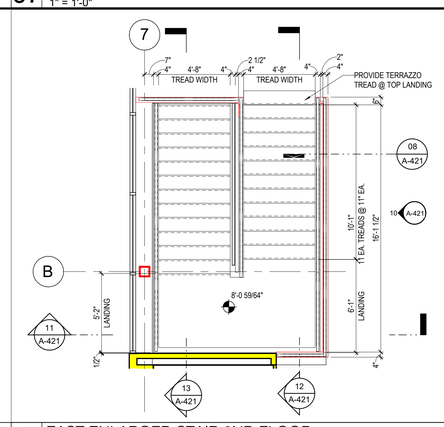

04 EAST ENLARGED STAIR 2ND FLOOR
1/4" = 1'-0"

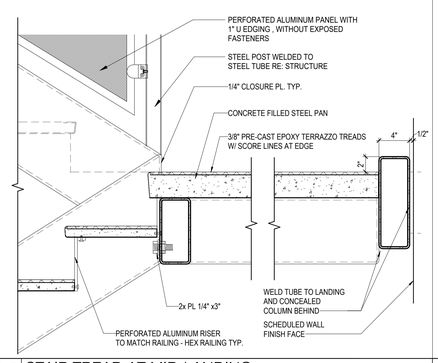

03 STAIR TREAD AT MID-LANDING
1 1/2" = 1'-0"

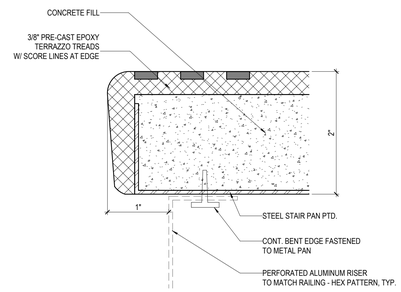

02 TYP. NOSING DETAIL
N.T.S.

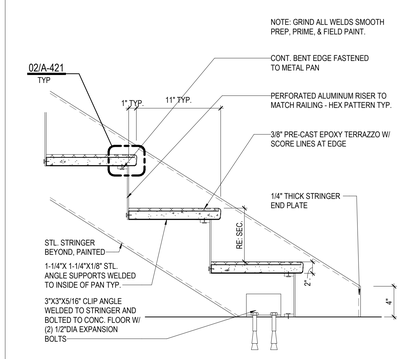

01 STAIR AT LEVEL SLAB
1 1/2" = 1'-0"

PBK
www.pbk.com
TX FIRM: BR 1608
HOUSTON, TX
713-965-0608

PKG 3A - GPHS NEW FIELDHOUSE
1000 Keene St.
Galena Park, TX 77547

CLIENT PROJECT NO: 240539
ISSUE FOR PROPOSAL

KEY PLAN
NORTH: PLAN TRUE

REGISTERED ARCHITECT JAMES LEPICOVITZ STATE OF TEXAS
6/10/2025

CLIENT	
Galena Park ISD	
DATE June 10, 2025	PROJECT NUMBER 240539

DRAWING HISTORY

No.	Description	Date

CHECKED BY: Checker
DRAWN BY: JS

ENLARGED STAIR PLANS AND SECTIONS

A-421

Plot Stamp:
6/10/2025 5:34:47 PM

ELEVATOR PLANS & SECTIONS
A-422
FOR BLUEBEAM LABELING/OCR:

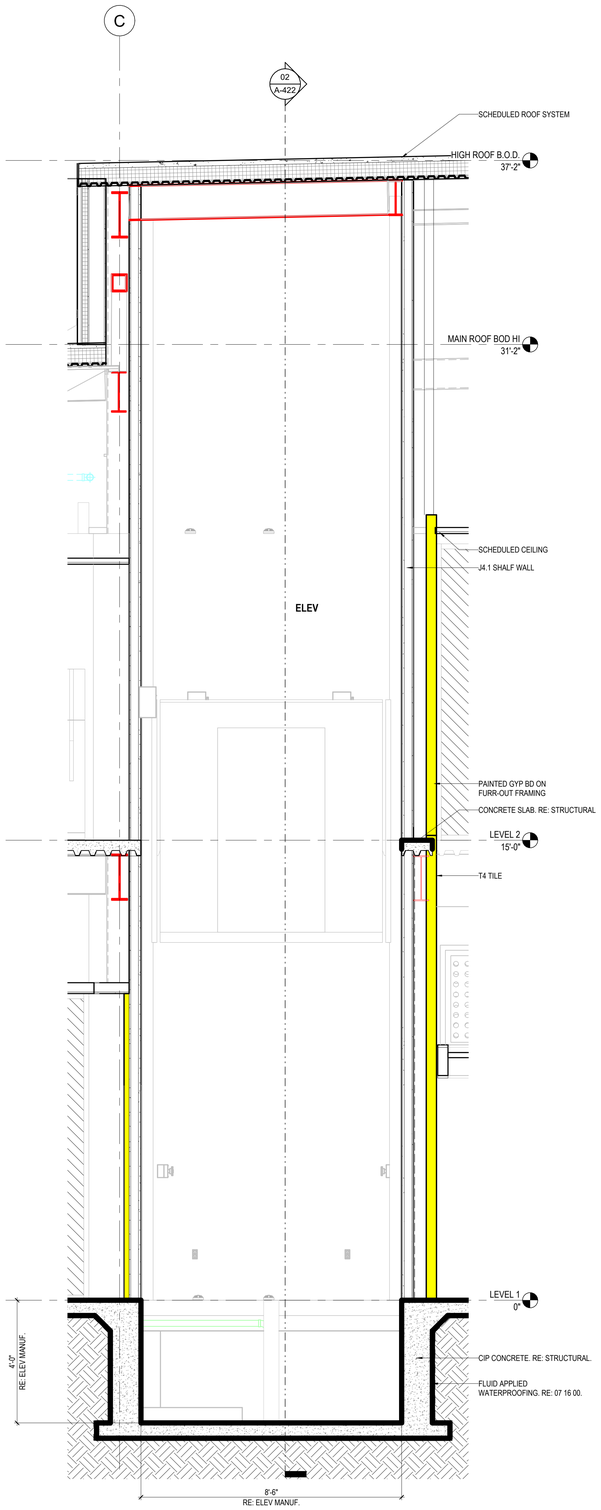

03 SECTION @ ELEVATOR
1/2" = 1'-0"

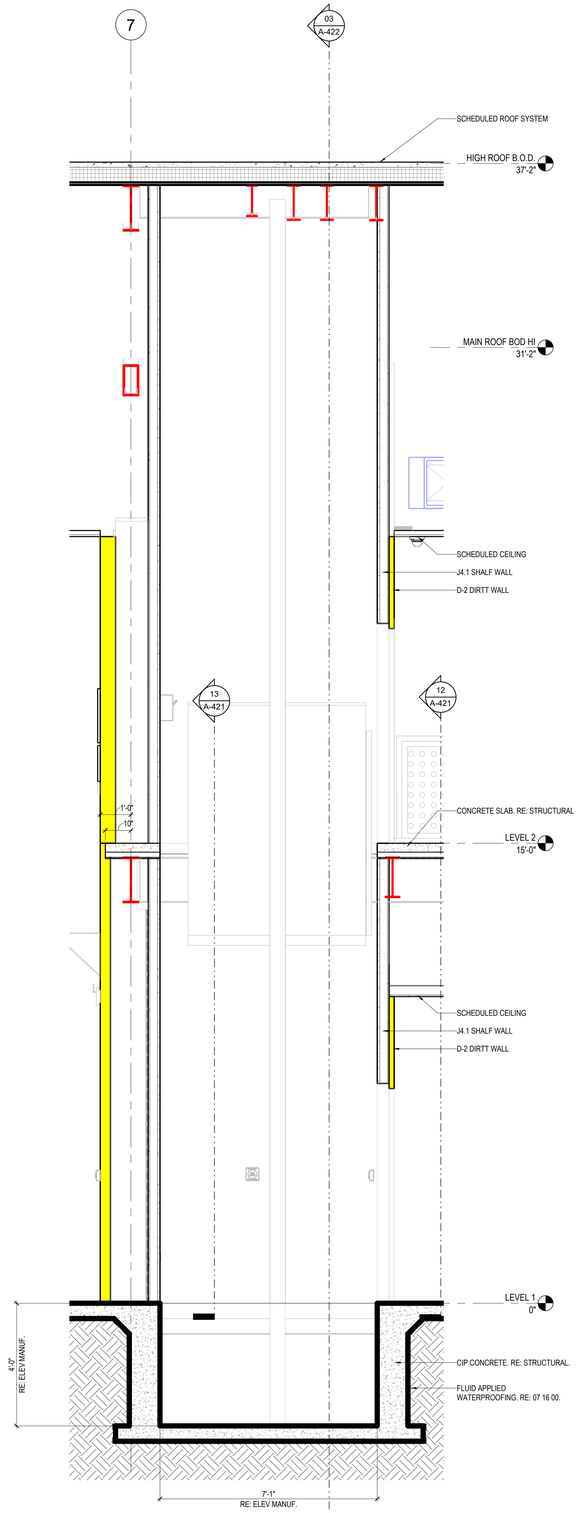

02 SECTION @ ELEVATOR
1/2" = 1'-0"

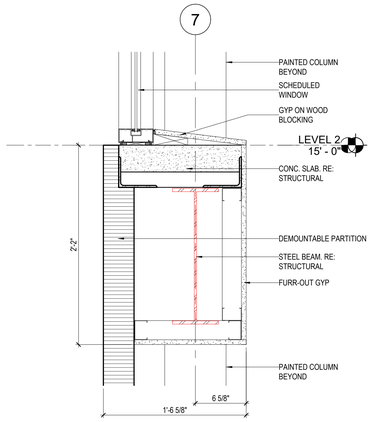

07 STAIR DETAIL
1 1/2" = 1'-0"

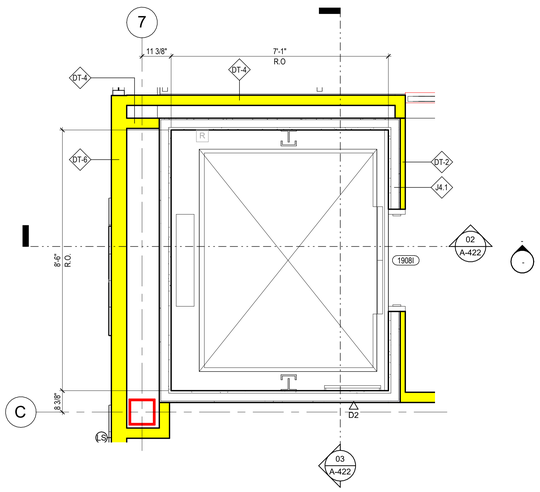

04 LEVEL 2 - ELEVATOR PLAN
1/2" = 1'-0"

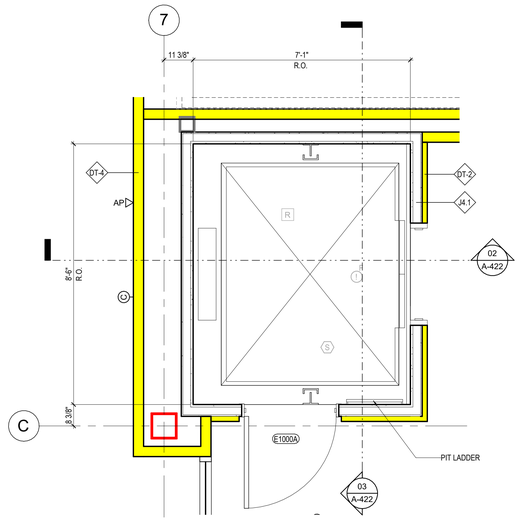

01 LEVEL 1 - ELEVATOR PLAN
1/2" = 1'-0"

PBK

www.pbk.com
TX FIRM: BR 1608
HOUSTON, TX 713-965-0608

PKG 3A - GPHS NEW FIELDHOUSE

1000 Keene St.
Galena Park, TX 77547

CLIENT PROJECT NO: 240539

ISSUE FOR PROPOSAL

KEY PLAN
NORTH: PLAN TRUE

REGISTERED ARCHITECT JAN LEPICOVSKY 25572 STATE OF TEXAS

6/10/2025

CLIENT	
Galena Park ISD	
DATE June 10, 2025	PROJECT NUMBER 240539

DRAWING HISTORY

No.	Description	Date

CHECKED BY: Checker
DRAWN BY: Author

ELEVATOR PLANS & SECTIONS

A-422

Plot Stamp:
6/10/2025 5:34:50 PM

EXTERIOR ELEVATIONS
A-501
FOR BLUEBEAM LABELING/OCR:

0"
1"

EXTERIOR MATERIALS LEGEND

04 20 00.BK1
BRICK TYPE 1
Modular, Running Bond
KB&T, Galena Park Blend Velour

04 20 00.BK2
BRICK TYPE 2
Modular, Running Bond
KB&T, 500 Manganese Velour

04 20 00.CV1
CMU VENEER
8" x 16", Running Bond
Best Block, Grey Granite

07 42 13.MPU-1
METAL WALL PANEL
Berridge FW-12, Dark Bronze

07 42 13.MPU-2
METAL WALL PANEL
Berridge FW-12, Shasta White

07 42 13.16 MPP1
PERFORART
Pre Finished Aluminum Plate

04 73 17.CSM
CALCIUM SILICATE STONE UNITS
Oak Ridge

GENERAL ELEVATION NOTES

1. ALL BUILDING EXPANSION JOINT TO BE 1" UNLESS OTHERWISE NOTED.
2. CONTROL JOINT IN MASONRY VENEER TO BE 3/8" TYPICAL UNLESS OTHERWISE NOTED. EXTEND FULL HEIGHT OF WALL.
3. 1/2" EXPANSION JOINT FILLER ON BOTH ENDS OF ALL STEEL LINTEL ANGLES.
4. EXPOSED EXTERIOR STRUCTURAL STEEL TUBE MEMBERS SHALL BE PAINTED P-9.
5. STEEL MASONRY LINTELS SHALL BE GALVANIZED.
6. EXPOSED CONCRETE WALLS, COLUMNS, AND BEAMS SHALL BE RUBBED GROUT FINISH.
7. MASONRY WEEP AT 16" O.C. MAXIMUM.
8. EXTERIOR ALUMINUM STOREFRONT SYSTEM SHALL HAVE ALUMINUM SUB-SILLS WITH END DAMS.
9. EXTERIOR ALUMINUM STOREFRONT SYSTEM SHALL HAVE CONTINUOUS ALUMINUM BACKFILLERS WITH CONTINUOUS PERIMETER ALUMINUM ANGLE.
10. FLEXIBLE MEMBRANE FLASHING AT WINDOWS SILLS AND LINTELS SHALL HAVE PRE-FORMED END DAMS.
11. MASONRY VENEER CONTROL JOINTS SHALL BE 3/8" AT INSIDE CORNERS. AT DISTANCES NOT TO EXCEED 3'-4" FROM OUTSIDE CORNERS, AND AT 30'-0" O.C. MAXIMUM. UNLESS NOTED OTHERWISE. REFERENCE EXTERIOR ELEVATIONS.
12. GUTTERS, CONDUCTOR HEADS, AND DOWNSPOUTS SHALL BE PRE-FINISHED SHEET METAL. COLOR SELECTED BY ARCHITECT.
13. DOWNSPOUTS SHALL HAVE 16 GAUGE PRE-FINISHED DOWNSPOUT BOOTS TO 6'-0" ABOVE FINISH GRADE. COLOR SELECTED BY ARCHITECT.
14. DOWNSPOUTS AND/OR ROOF DRAINS SHALL BE CONNECTED TO STORM DRAIN SYSTEM UNLESS OTHERWISE NOTED. REFERENCE CIVIL FOR STORM DRAIN CONNECTION DETAILS AND LOCATIONS.
15. CONTRACTOR SHALL PROVIDE MOCK-UP FOR EACH EXTERIOR CONDITION AND CONSTRUCTION ASSEMBLY TYPE. INCLUDE A 2X2 WINDOW MOCK-UP. MOCK-UP SHALL INCLUDE METAL FLASHINGS, VERTICAL AND HORIZONTAL FLEXIBLE MEMBRANE FLASHINGS, AND WINDOW INSTALLATIONS AS DETAILED IN CONSTRUCTION DOCUMENTS. MOCK-UP SHALL BE A MINIMUM OF 8'-0" TALL X 16'-0" LONG WITH AN EXTERIOR CORNER, INTERIOR CORNER, AND VERTICAL CONTROL JOINTS. COORDINATE LOCATION OF MOCK-UP PANEL WITH ARCHITECT PRIOR TO CONSTRUCTION.

KEYNOTE LEGEND

NUMBER	DESCRIPTION
04 05 00.CJ	MASONRY CONTROL JOINT
04 20 00.CV1	CONCRETE MASONRY UNIT VENEER, TYPE 1
04 72 00.CSB	CAST STONE BANDING
04 73 17.CSM	
07 42 13.16.MPP1	1/8" PRE-FINISHED ALUMINUM PLATE, LASER CUT STANDARD PERFORATIONS
07 42.13.MPU-1	UNINSULATED METAL WALL PANEL, TYPE 1 - CONCEALED FASTENER
07 62 00.CPG	PRE-FINISHED METAL COPING
07 71 23.DS6	6"X 6" PRE-FINISHED METAL DOWNSPOUT W/ HEAVY GAUGE BOOT, RE: CIVIL
07 71 23.GR6	6" X 6" PRE-FINISHED METAL GUTTER
08 43 13.SS	SUNSHADE OUTRIGGER SYSTEM, 30" DEPTH
08 91 19	FIXED LOUVERS (Architectural - PBK Architects)
10 73 16.13.ACS	ALUMINUM CANOPY SYSTEM

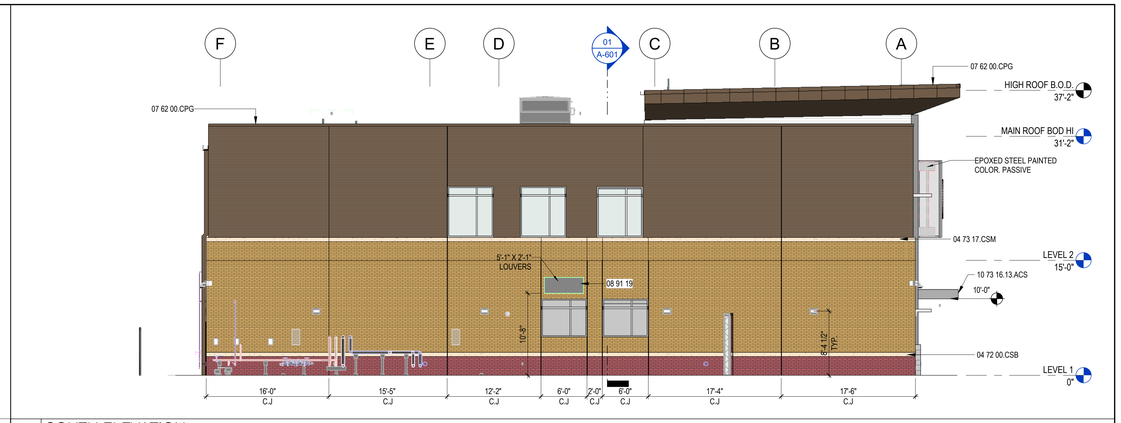

04 SOUTH ELEVATION
1/8" = 1'-0"

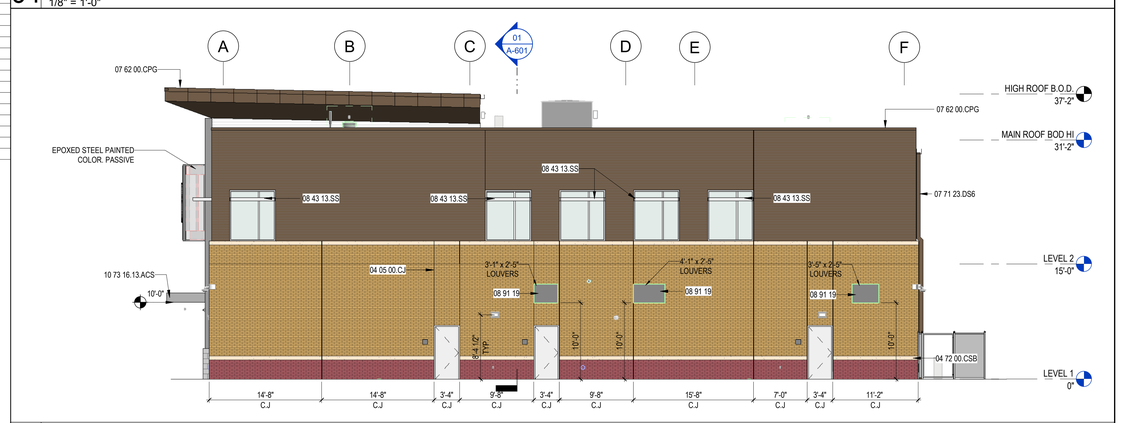

03 NORTH ELEVATION
1/8" = 1'-0"

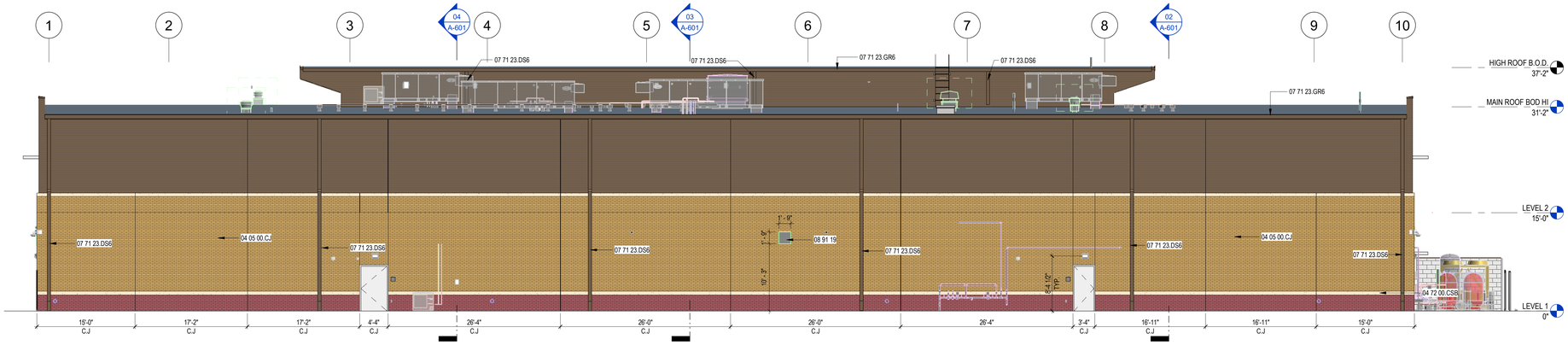

02 WEST ELEVATION
1/8" = 1'-0"

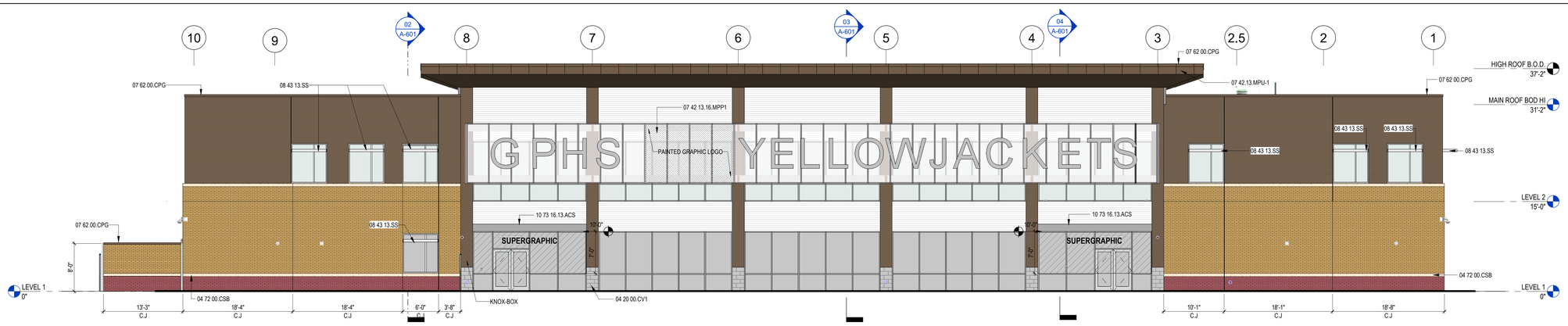

01 EAST ELEVATION
1/8" = 1'-0"

PBK
www.pbk.com
TX FIRM: BR 1608
HOUSTON, TX
713-965-0608

PKG 3A - GPHS NEW FIELDHOUSE
1000 Keene St.
Galena Park, TX 77547

CLIENT PROJECT NO: 240539
ISSUE FOR PROPOSAL

KEY PLAN
NORTH: PLAN TRUE

REGISTERED ARCHITECT JAN LEPICOVSKY 25672 STATE OF TEXAS
6/10/2025

CLIENT	
Galena Park ISD	
DATE	PROJECT NUMBER
June 10, 2025	240539

DRAWING HISTORY

No.	Description	Date

CHECKED BY: T.C
DRAWN BY: S.M

EXTERIOR ELEVATIONS

A-501

Plot Stamp:
6/11/2025 10:54:22 AM

BUILDING SECTIONS
A-601
FOR BLUEBEAM LABELING/OCR:

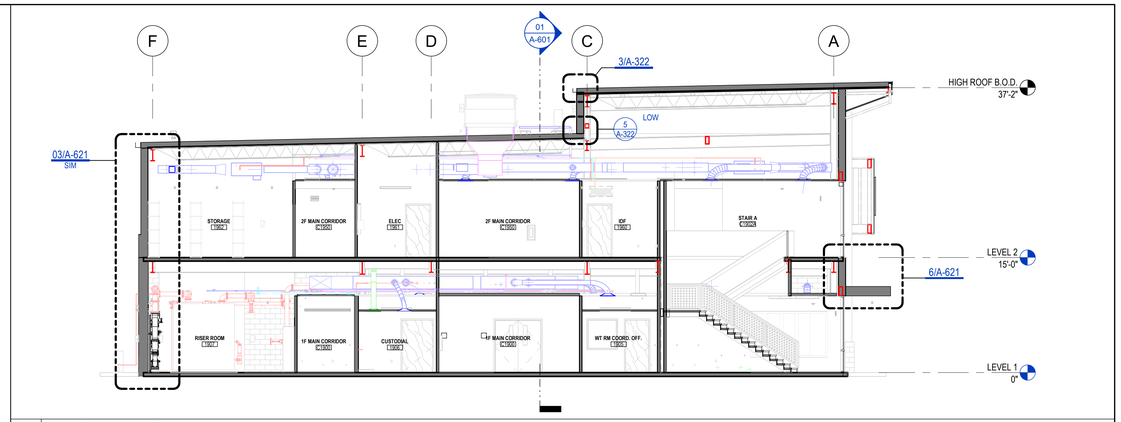

04 BUILDING SECTION A
1/8" = 1'-0"

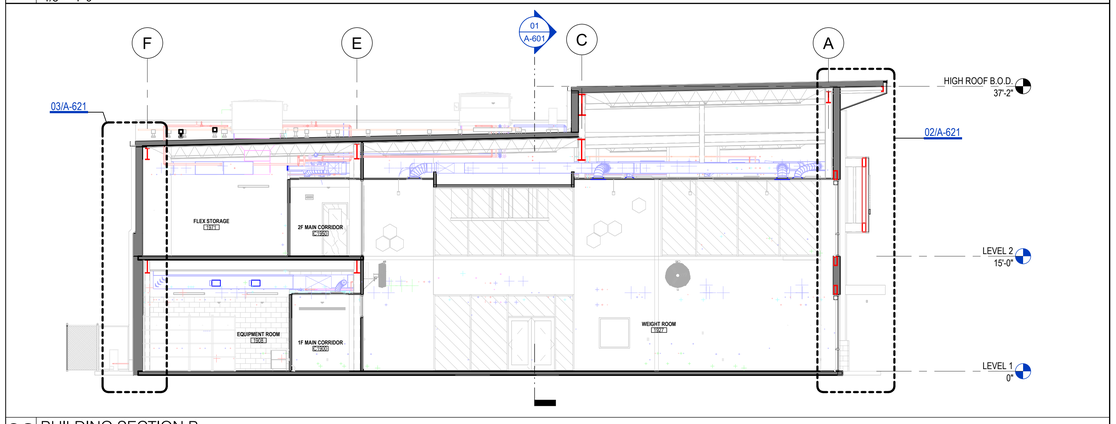

03 BUILDING SECTION B
1/8" = 1'-0"

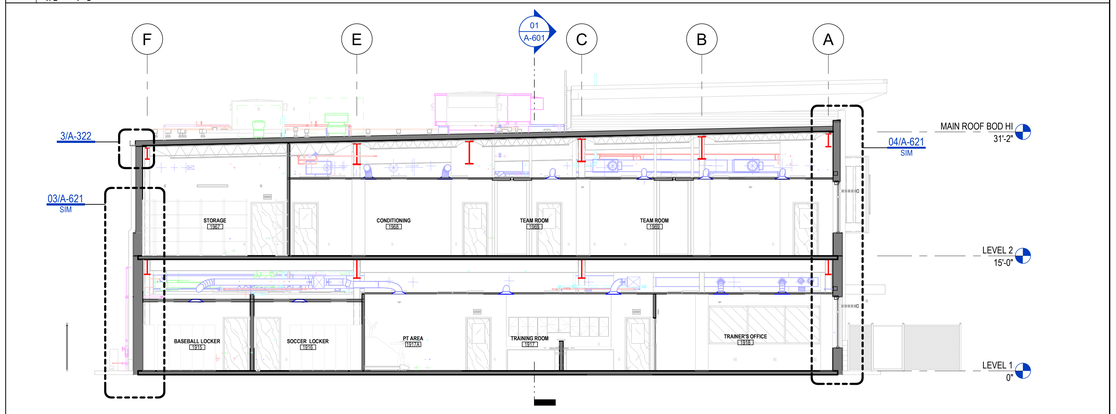

02 BUILDING SECTION C
1/8" = 1'-0"

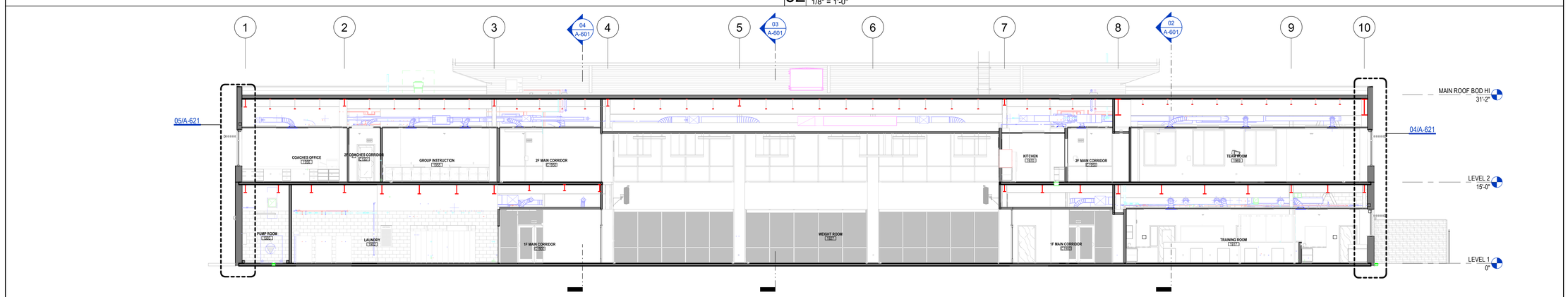

01 BUILDING SECTION D
1/8" = 1'-0"

PBK

www.pbk.com
TX FIRM: BR 1608
HOUSTON, TX
713-965-0608

PKG 3A - GPHS NEW FIELDHOUSE

1000 Keene St,
Galena Park, TX 77547

CLIENT PROJECT NO: 240539

ISSUE FOR PROPOSAL

KEY PLAN
NORTH: PLAN TRUE

REGISTERED ARCHITECT
JAN LEPICOVSKY
25572
STATE OF TEXAS

6/10/2025

CLIENT	
Galena Park ISD	
DATE	PROJECT NUMBER
June 10, 2025	240539

DRAWING HISTORY

No.	Description	Date

CHECKED BY: Checker
DRAWN BY: Author

BUILDING SECTIONS

A-601

Plot Stamp:
6/11/2025 10:54:41 AM

WALL SECTIONS
A-621

FOR BLUEBEAM LABELING/OCR:

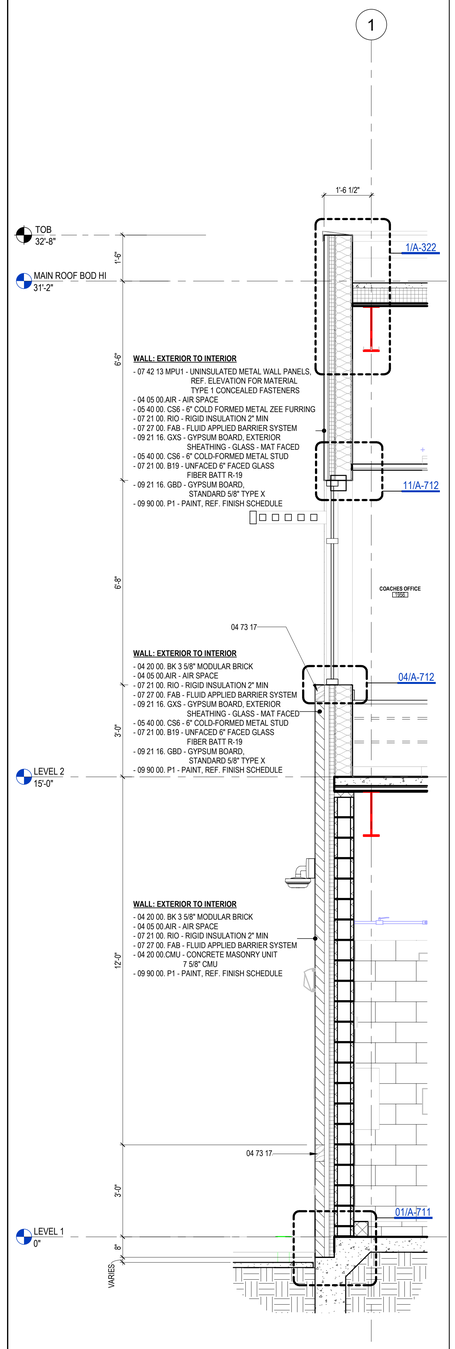

05 WALL SECTION @ NORTH WALL
1/2" = 1'-0"

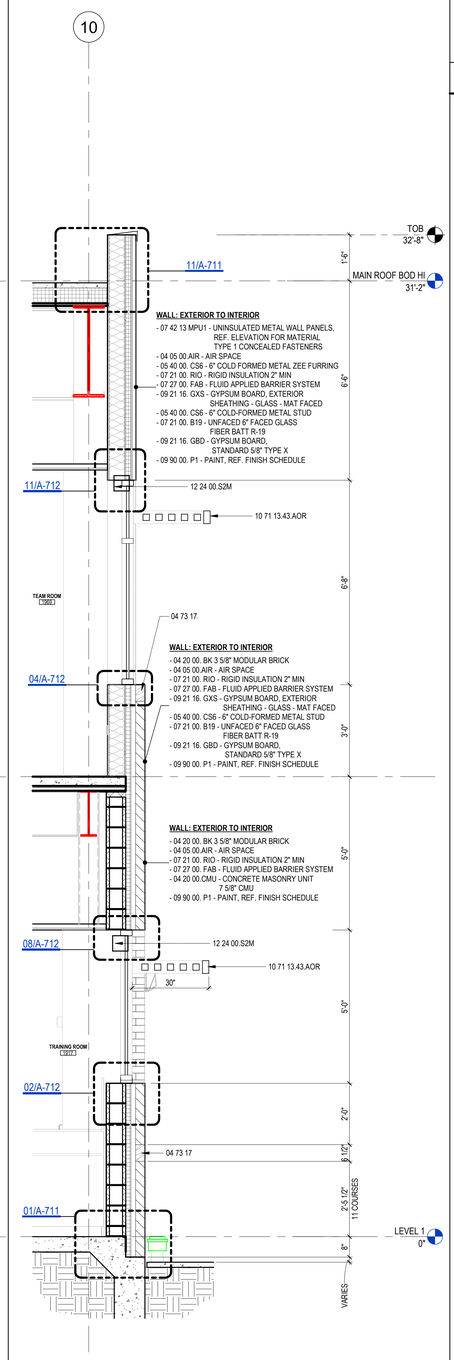

04 WALL SECTION @ SOUTH WALL
1/2" = 1'-0"

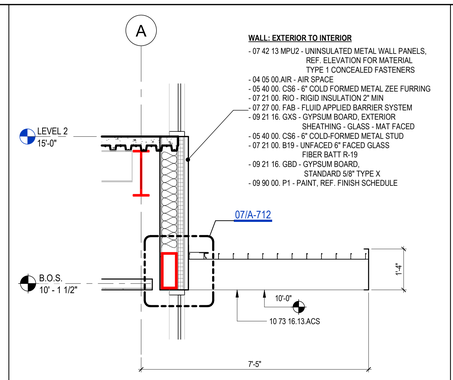

6 PARTIAL WALL SECTION @ CANOPY
1/2" = 1'-0"

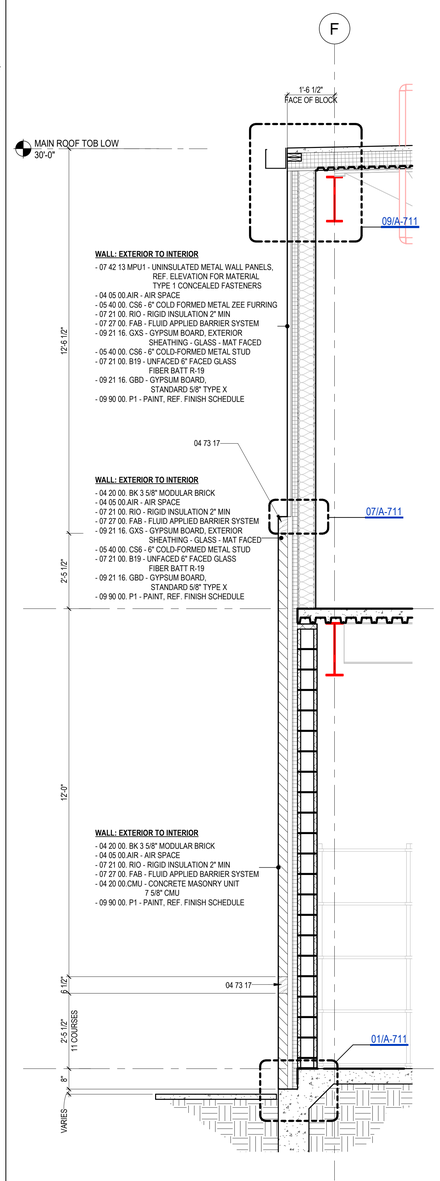

03 WALL SECTION @ WEST WALL
1/2" = 1'-0"

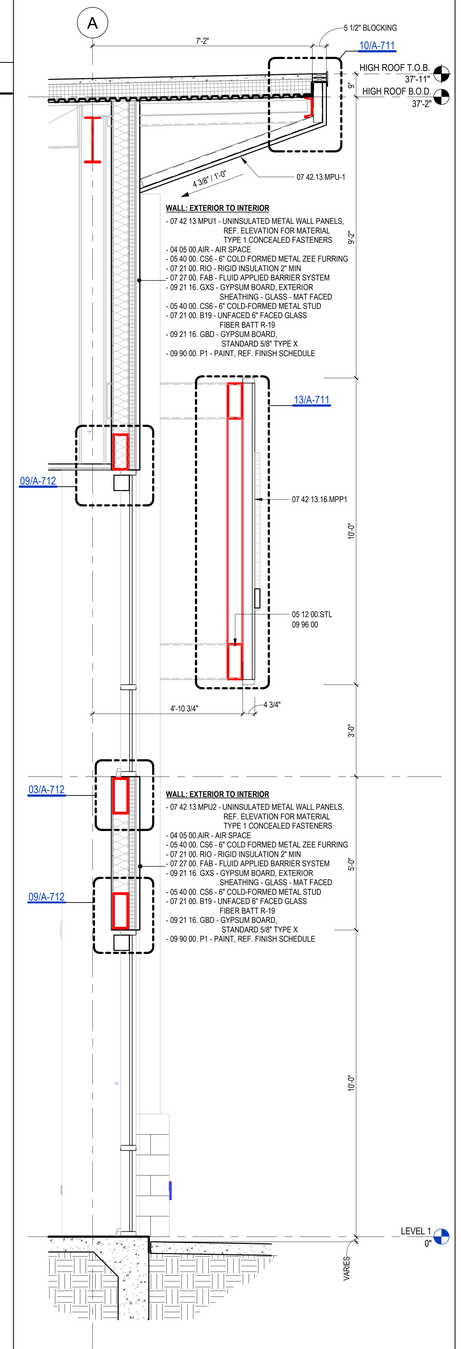

02 WALL SECTION @ WEIGHT ROOM
1/2" = 1'-0"

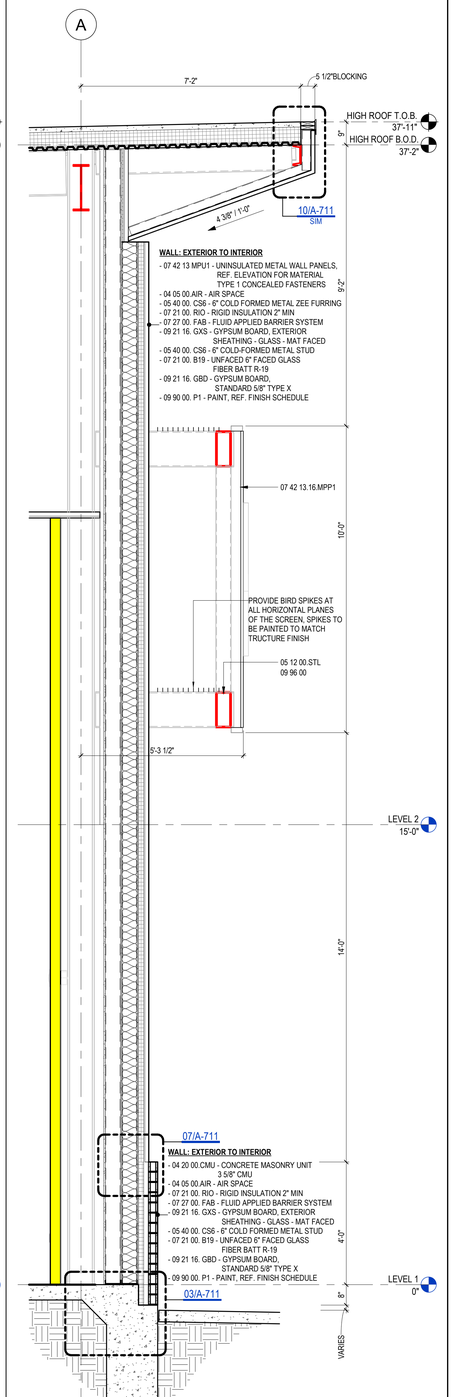

01 WALL SECTION @ PILASTER
1/2" = 1'-0"

KEYNOTE LEGEND

NUMBER	DESCRIPTION
04 73 17	CALCIUM SILICATE MANUFACTUED STONE MASONRY (Architectural - PBK Architects)
05 12 00.STL	STEEL FRAMING, REFER TO STRUCTURAL
07 42 13.16.MPP1	1/8" PRE-FINISHED ALUMINUM PLATE, LASER CUT STANDARD PERFORATIONS
07 42 13.MPU-1	UNINSULATED METAL WALL PANEL, TYPE 1 - CONCEALED FASTENER
09 96 00	HIGH PERFORMANCE COATINGS (Architectural - PBK Architects)
10 71 13.43.AOR	ALUMINUM OUTRIGGER
10 73 16.13.ACS	ALUMINUM CANOPY SYSTEM
12 24 00.S2M	MOTORIZED WINDOW SHADE UNIT MOUNTED [RECESSED IN CEILING or BETWEEN JAMBS or TO FACE OF GLAZING SYSTEM]

PBK
www.pbk.com
TX FIRM: BR 1608
HOUSTON, TX
713-365-0608

PKG 3A - GPHS NEW FIELDHOUSE

1000 Keene St.
Galena Park, TX 77547

CLIENT PROJECT NO: 240539

ISSUE FOR PROPOSAL

Galena Park ISD — GP — EXCELLENCE IN ALL FOR ALL STUDENTS

REGISTERED ARCHITECT — JAN LEPICOVSKY — 25572 — STATE OF TEXAS

6/10/2025

CLIENT	
Galena Park ISD	
DATE: June 10, 2025	PROJECT NUMBER: 240539

DRAWING HISTORY

No.	Description	Date

CHECKED BY: TC

DRAWN BY: LG

WALL SECTIONS

A-621

Plot Stamp:
6/11/2025 10:54:51 AM

PLAN DETAILS
A-701
FOR BLUEBEAM LABELING/OCR:

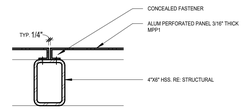

09 TYP. PLAN DETAIL @ PERF SCREEN
1 1/2" = 1'-0"

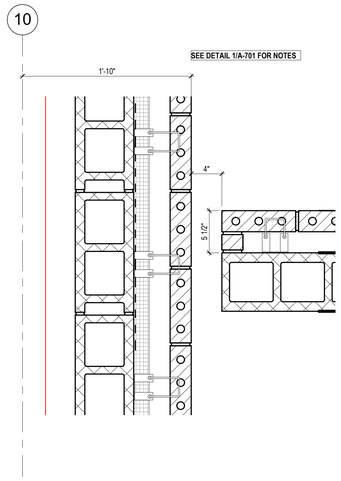

7 LEVEL 1 - EXTERIOR PLAN DETAIL
1 1/2" = 1'-0"

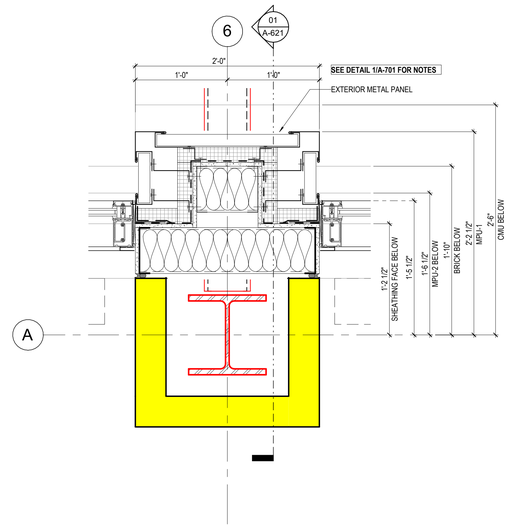

6 LEVEL 2 - EXTERIOR PLAN DETAIL, TYP
1 1/2" = 1'-0"

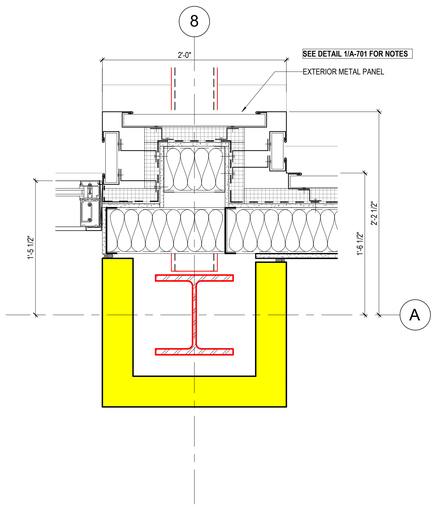

5 LEVEL 2 - EXTERIOR PLAN DETAIL
1 1/2" = 1'-0"

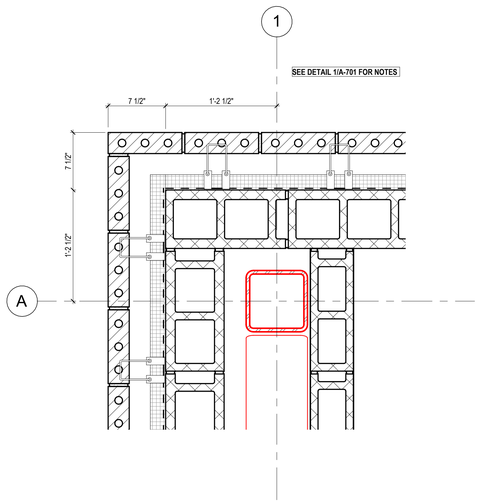

3 LEVEL 1 - EXTERIOR PLAN DETAIL, TYP
1 1/2" = 1'-0"

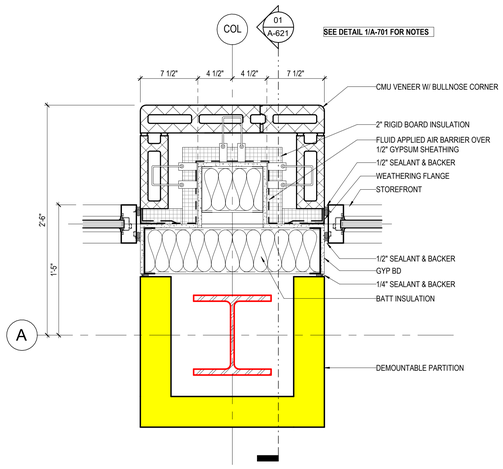

2 LEVEL 1 - EXTERIOR PLAN DETAIL, TYP
1 1/2" = 1'-0"

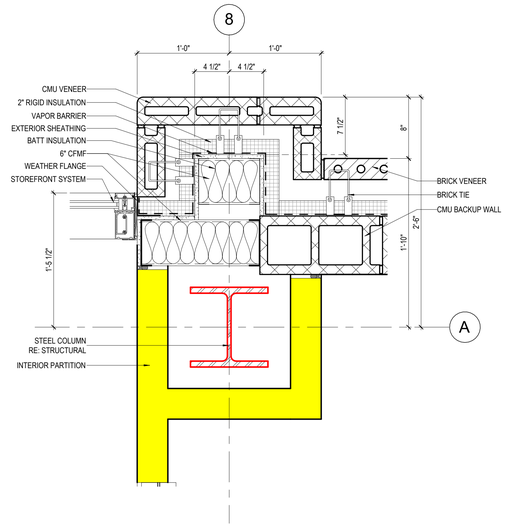

1 LEVEL 1 - EXTERIOR PLAN DETAIL
1 1/2" = 1'-0"

PBK

www.pbk.com
TX FIRM: BR 1608
HOUSTON, TX
713-965-0608

PKG 3A - GPHS NEW FIELDHOUSE

1000 Keene St.
Galena Park, TX 77547

CLIENT PROJECT NO: 240539

ISSUE FOR PROPOSAL

Galena Park ISD
GP
EXCELLENCE IN ALL FOR ALL OF ALL

REGISTERED ARCHITECT
JAN LEPICOVSKY
25572
STATE OF TEXAS

6/10/2025

CLIENT	
Galena Park ISD	
DATE	PROJECT NUMBER
June 10, 2025	240539

DRAWING HISTORY

No.	Description	Date

CHECKED BY: Checker
DRAWN BY: Author

PLAN DETAILS

A-701

Plot Stamp:
6/10/2025 5:35:24 PM

WALL SECTIONS DETAILS
A-711

FOR BLUEBEAM LABELINGOOR:

0"
1"

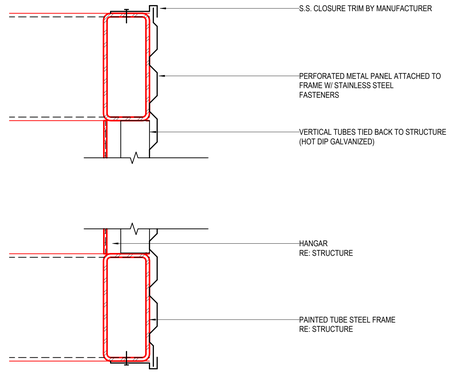

13 WALL SECTION @ STRUCTURE
1 1/2" = 1'-0"

SECTION DETAIL SYMBOL LEGEND

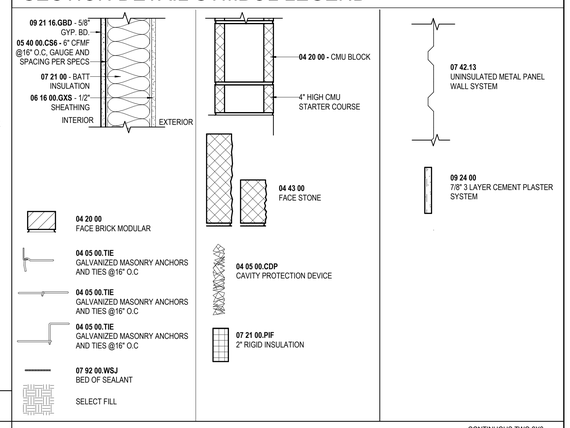

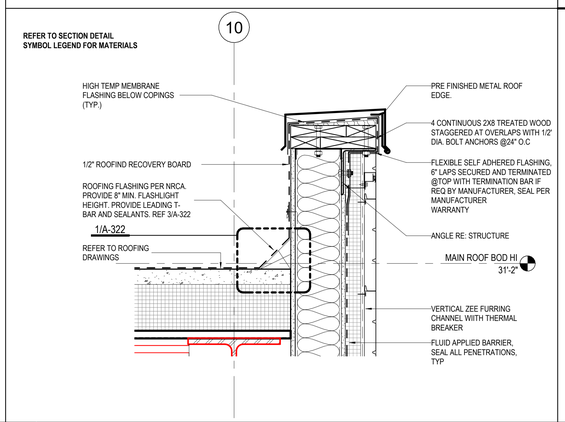

11 PARAPET CAP STUD @METAL PANEL
1 1/2" = 1'-0"

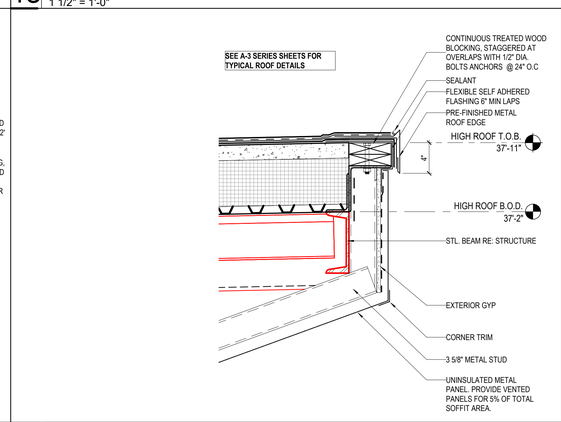

10 WALL SECTION @ WEIGHT ROOM ROOF
1 1/2" = 1'-0"

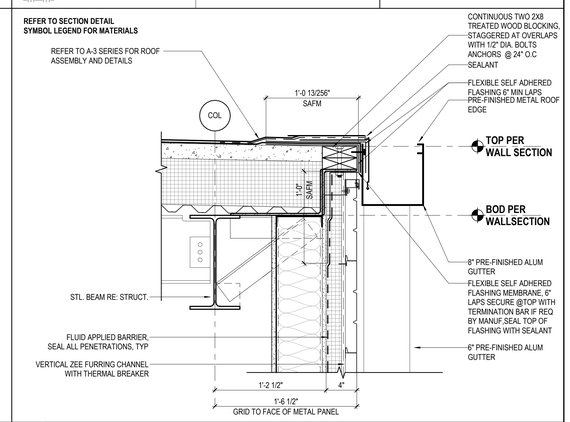

09 ROOF EDGE WITH CFMF GUTTER AND DOWNSPOUT
1 1/2" = 1'-0"

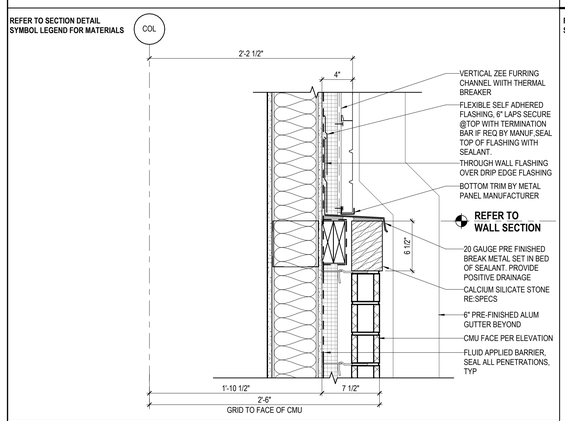

08 CMU TRANSITION TO METAL PANEL
1 1/2" = 1'-0"

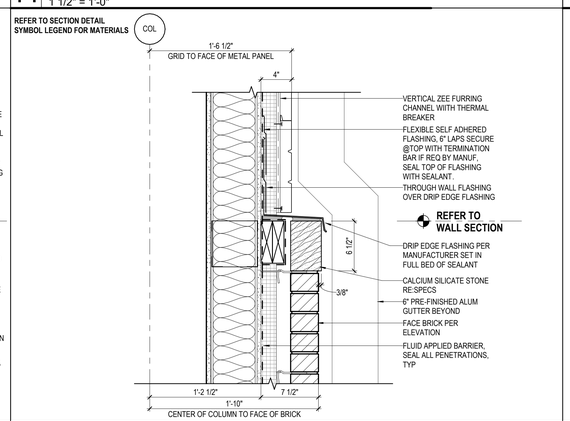

07 BRICK TRANSITION TO METAL PANEL
1 1/2" = 1'-0"

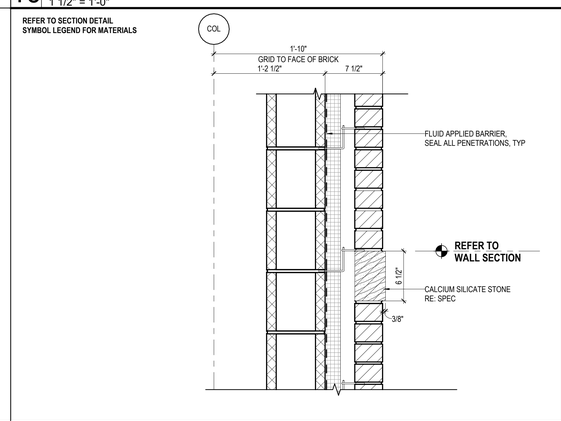

06 BRICK WALL WITH STONE @CMU
1 1/2" = 1'-0"

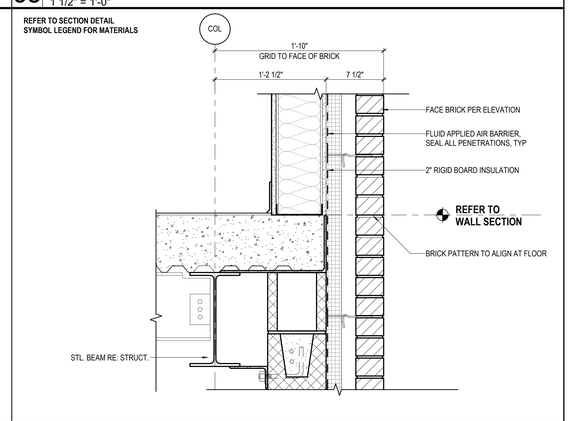

05 SLAB EDGE WITH CFMF AND BRICK
1 1/2" = 1'-0"

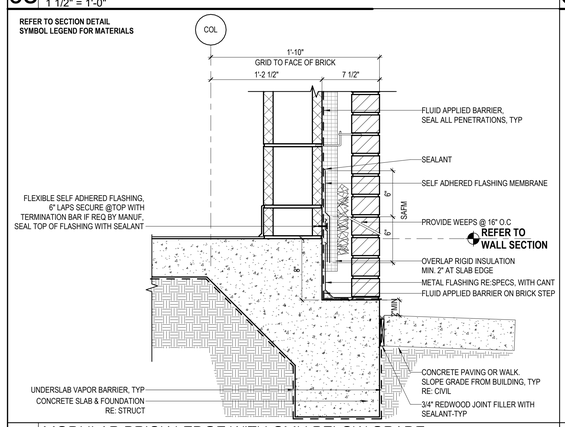

4 MODULAR BRICK LEDGE WITH CMU BELOW GRADE
1 1/2" = 1'-0"

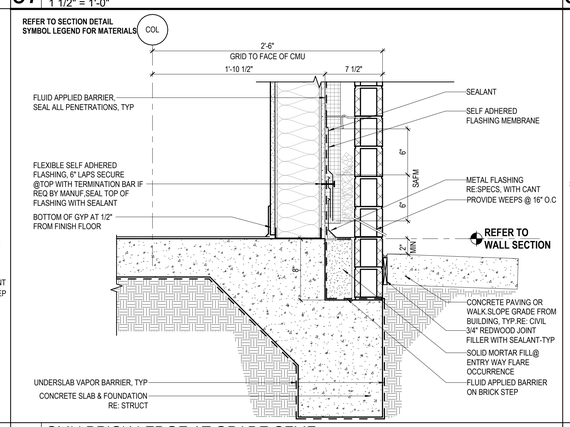

03 CMU BRICK LEDGE AT GRADE CFMF
1 1/2" = 1'-0"

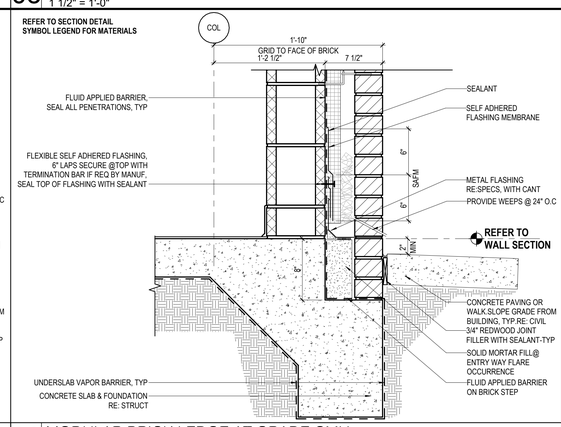

02 MODULAR BRICK LEDGE AT GRADE CMU
1 1/2" = 1'-0"

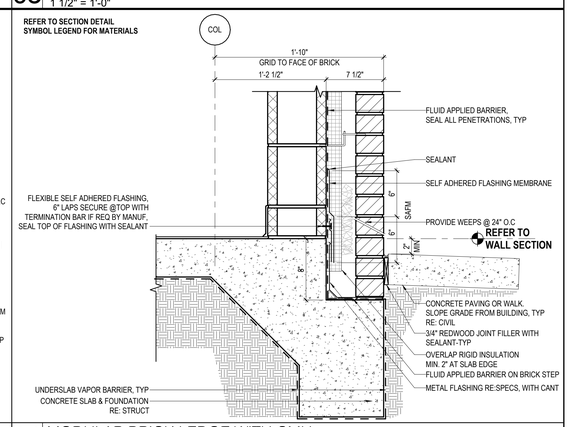

01 MODULAR BRICK LEDGE WITH CMU
1 1/2" = 1'-0"

PBK

www.pbk.com
TX FIRM: BR 1608
HOUSTON, TX
713-965-0608

PKG 3A - GPHS NEW FIELDHOUSE

1000 Keene St.
Galena Park, TX 77547

CLIENT PROJECT NO: 240539

ISSUE FOR PROPOSAL

Galena Park ISD

REGISTERED ARCHITECT JAN LEPICOVSKY 25572 STATE OF TEXAS

6/10/2025

CLIENT	
Galena Park ISD	
DATE	PROJECT NUMBER
June 10, 2025	240539

DRAWING HISTORY

No.	Description	Date

CHECKED BY: TC

DRAWN BY: LG

WALL SECTIONS DETAILS

A-711

Plot Stamp:
6/10/2025 5:35:25 PM

STOREFRONT DETAILS
A-712

FOR BLUEBEAM LABELING/OCR:

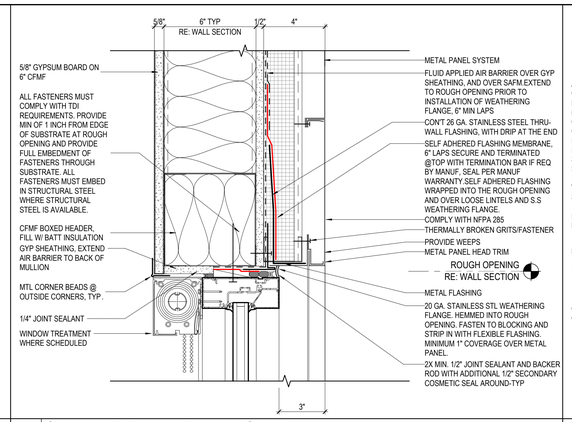

11 SF HEAD @ METAL PANEL CFMF
3" = 1'-0"

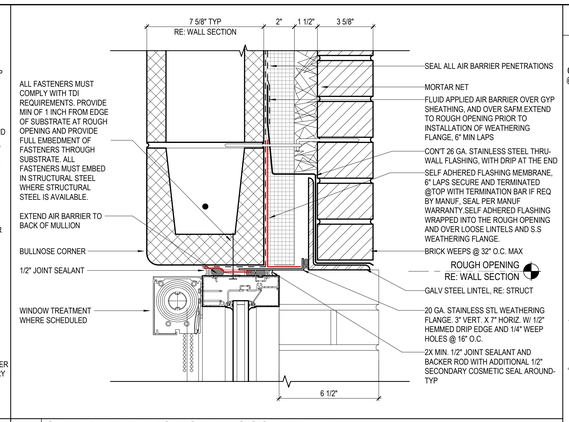

10 SF HEAD @ BRICK CMU LOOSE LINTEL
3" = 1'-0"

SECTION DETAIL SYMBOL LEGEND

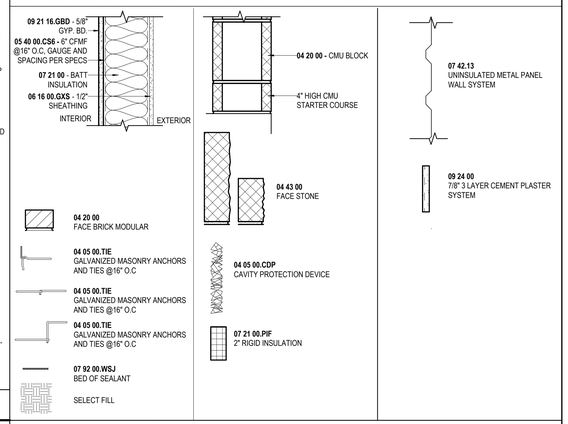

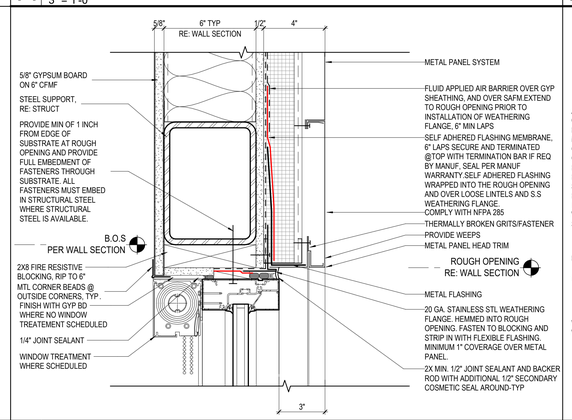

09 SF HEAD @ METAL PANEL CFMF STRUCTURE
3" = 1'-0"

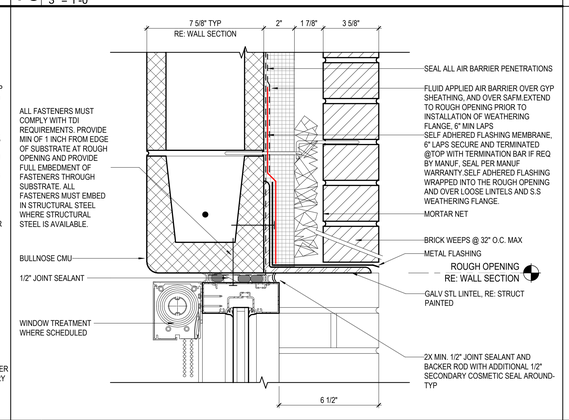

08 SF HEAD @ BRICK CMU STRUCT LINTEL
3" = 1'-0"

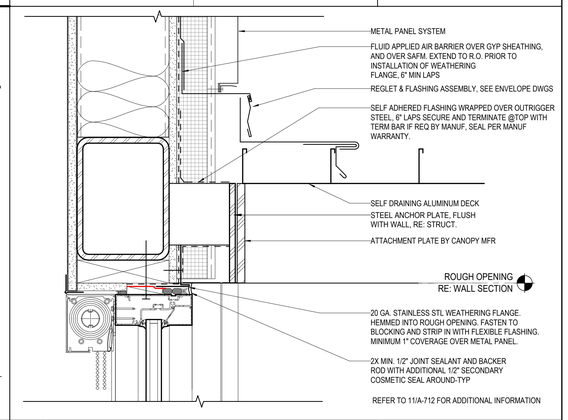

07 SF HEAD @ CANOPY W/ MTL PANEL
3" = 1'-0"

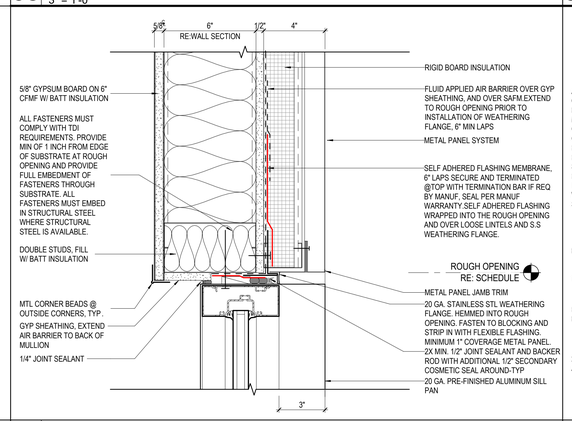

06 SF JAMB @ METAL PANEL CFMF JAMB STUDS
3" = 1'-0"

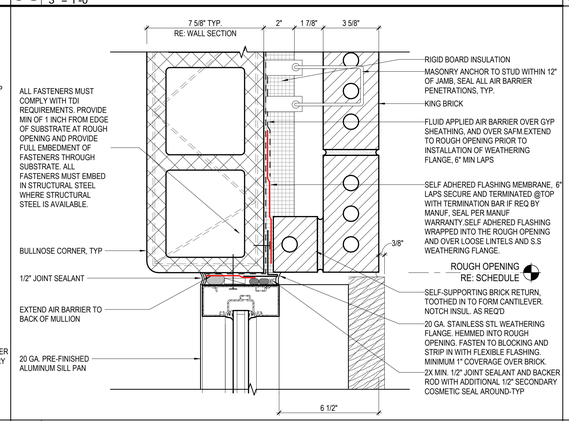

05 SF JAMB @ BRICK CMU
3" = 1'-0"

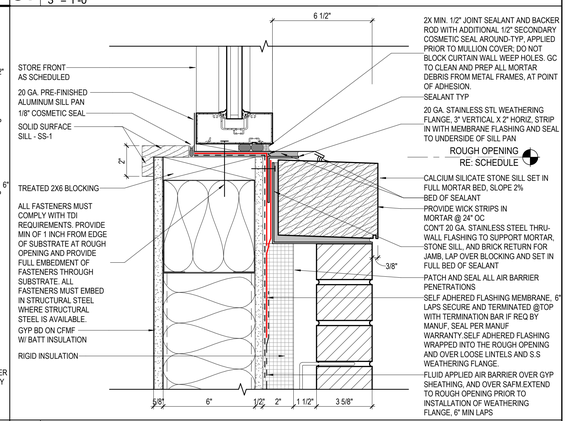

04 SF SILL @ BRICK CFMF
3" = 1'-0"

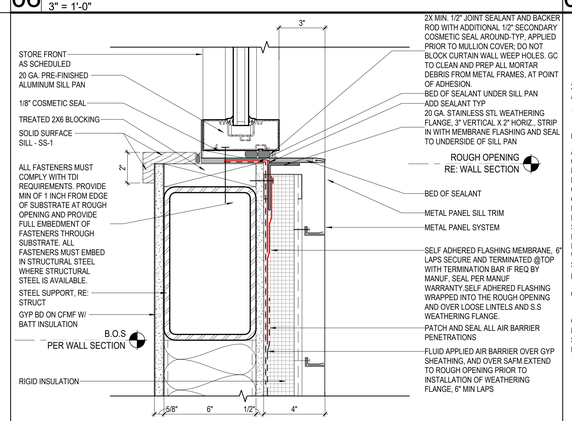

03 SF SILL @ METAL PANEL CFMF STL POST
3" = 1'-0"

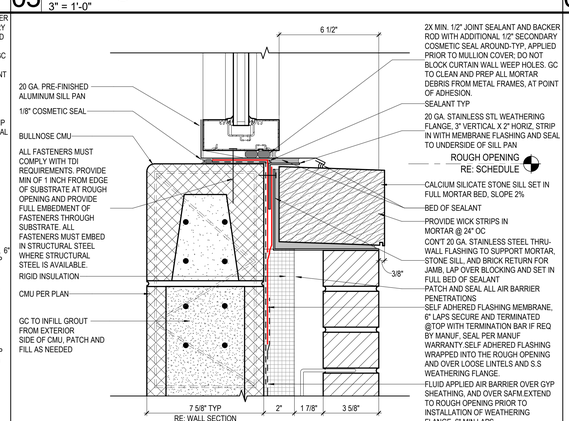

02 SF SILL @BRICK CMU
3" = 1'-0"

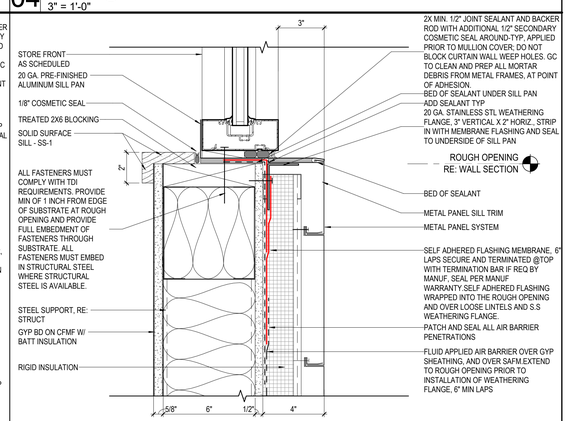

01 SF SILL @ METAL PANEL CFMF
3" = 1'-0"

PBK

www.pbk.com
TX FIRM: BR 1608
HOUSTON, TX
713-965-0608

PKG 3A - GPHS NEW FIELDHOUSE

1000 Keene St.
Galena Park, TX 77547

CLIENT PROJECT NO: 240539

ISSUE FOR PROPOSAL

Galena Park ISD
GP
FOCUSED IN ALL FOR ALL

REGISTERED ARCHITECT
JAN LEPICOVSKY
25572
STATE OF TEXAS

6/10/2025

CLIENT	
Galena Park ISD	
DATE	PROJECT NUMBER
June 10, 2025	240539

DRAWING HISTORY

No.	Description	Date

CHECKED BY: TC
DRAWN BY: LG

STOREFRONT DETAILS

A-712

Plot Stamp:
6/10/2025 5:35:25 PM

PARTITION TYPES
A-801A

FOR BLUEBEAM LABELING/OCR:

0"
1"

BRACE FRAMING FOR 3-5/8" STUDS

STUD TYPE	STUD PROP.	SPACING	MAX. LENGTH	MISCELLANEOUS
SJ 20 (40 KSI) (20 GA.)	1X = 0.541 IN^4	4'-0" O.C.	14'-0"	BRACE AT MID-POINT FOR LENGTHS OVER 14'-0"
	rx = 1.429 IN			
	A = 0.2136 IN^2			
	Sx = 0.273 IN^3			

BRACE FRAMING FOR 6" STUDS

STUD TYPE	STUD PROP.	SPACING	MAX. LENGTH	MISCELLANEOUS
SJ 20 (40 KSI) (20 GA.)	1X = 1.787 IN^4	4'-0" O.C.	20'-0"	BRACE AT MID-POINT FOR LENGTHS OVER 20'-0"
	rx = 2.253 IN			
	A = 0.2148 IN^2			
	Sx = 0.539 IN^3			

LIMITING HEIGHT OF METAL STUDS

HOW TO USE THIS SHEET

1. NOT EVERY PARTITION TYPE SHOWN IS NECESSARILY INTENDED FOR USE ON THIS PROJECT. REFER TO FLOOR PLANS FOR REFERENCE MARKS INDICATING APPLICABLE PARTITION TYPES.
2. REFER TO BRACING DETAILS FOR SUPPORT OF THE TOP OF EACH PARTITION TYPE AND BRACING OF PARTITIONS THAT EXCEED LIMITING HEIGHT OF PARTITION TYPES.
3. REFER TO FINISH SCHEDULES FOR APPLIED FINISHES TO BOTH SIDES OF WALLS.
4. COORDINATE TOPS OF FINISHED WALLS WITH ADJACENT CEILING HEIGHTS PER SCHEDULES, SECTIONS AND OR DETAILS.
5. CONSULT ARCH. FOR ANY DISCREPANCIES OR QUESTIONS REGARDING PARTITIONS PRIOR TO INSTALLATION.

INTERIOR METAL STUD PARTITION NOTES

1. ALL METAL STUD PARTITIONS SHALL BE 25 GAUGE METAL STUDS AT 16" O.C. U.N.O., IF THE LIMITING HEIGHT FOR A 25 GAUGE METAL STUD PARTITION IS EXCEEDED, INCREASE GAUGE OF STUDS. NOTIFY ARCH. PRIOR TO INSTALLATION.
2. PROVIDE 20 GAUGE METAL STUDS, IN LIEU OF 25 GAUGE METAL STUDS, AT STUD WALL WITH TILE FINISHES.
3. METAL STUD PARTITION BRACING
   A. WHERE BRACING METHODS BETWEEN THIS SHEET AND STRUCT. CONFLICT, STRUCT. SHALL OVERRIDE, NOTIFY ARCH. PRIOR TO INSTALLATION
   B. PROVIDE INTERMEDIATE BRACING AT ALL METAL STUD PARTITIONS THAT EXCEED THE VERTICAL LIMIT HEIGHT OF METAL STUDS
   C. ALL BRACING SHALL BE AT STUD POINTS
4. SET ALL FLOOR TRACKS ON A CONTINUOUS RIBBON OF SEALANT.
5. USE CONT. DEEP LEG DEFLECTION TRACK AT TOP OF ALL PARTITION CONNECTIONS AT TOP-OF-DECK LOCATIONS, REFER TO "TYP STUD FRAMING TO DECK" DETAIL.
6. PROVIDE GLASS MAT GYPSUM SHEATHING BOARDS FULL HEIGHT AT ALL PARTITIONS AT SHOWERS, ADJACENT TO ALL PLUMBING FIXTURES, AND AT ALL PARTITIONS WITH TILE FINISHES.
7. PROVIDE TILE BACKER BOARDS FULL HEIGHT AT ALL PARTITIONS NOT AT SHOWERS, NOT ADJACENT TO PLUMBING FIXTURES, AND WITHOUT TILE FINISHES IN ALL TOILET ROOMS.
8. RIGIDLY BRACE ALL DOOR FRAMES AT THE HEAD, HINGE, AND STRIKE SIDES, RIGIDLY BRACE ALL WINDOW FRAMES AT THE HEAD, JAMBS, AND SILL.
9. LOCATE CONTROL JOINTS IN GYPSUM BOARD PARTITIONS AS FOLLOWS
   A. PARTITIONS OR FURRING EXCEEDING 30'-0" SPANS HORIZ. AND OR VERT.
   B. WHERE A PARTITION ABUTS A STRUCTURAL ELEMENT OR DISSIMILAR WALL
   C. AT CHANGES WITHIN PLANE OF PARTITION
   D. AT EXPANSION JOINTS
   E. AT BOTH JAMBS OF INTERIOR AND EXTERIOR DOOR FRAMES AND WINDOW FRAMES, ABOVE AND BELOW FOR FULL HEIGHT OF WALL
10. FIRE-RATED PARTITIONS
   A. REFER TO THE UL FIRE RESISTANCE DIRECTORY FOR DETAILED DESCRIPTIONS OF FIRE-RATED PARTITIONS
   B. PROVIDE TYPE "X" FIRE RESISTIVE GYPSUM BOARD, 5/8" THICK U.N.O.
   C. FILL ALL GAPS AND DECK VOIDS WITH CONT. FIRESAFING INSUL.
   D. SEAL BOTTOM OF PARTITION ON BOTH SIDES, PARTITION PERIMETER, AND ALL PENETRATIONS WITH CONT. FIRE-RATED SEALANT
11. PARTITIONS WITH SOUND ATTENUATION BATT INSUL. BLANKETS
   A. PROVIDE FULL THICK SOUND ATTENUATION BATT INSUL. BLANKETS FULL HEIGHT OF PARTITION U.N.O.
   B. FILL ALL GAPS AND DECK VOIDS WITH CONT. SOUND ATTENUATION SAFING INSUL.
   C. TAPE AND BED OR CAULK ALL JOINTS BETWEEN GYPSUM BOARD PANELS
   D. SEAL BOTTOM OF PARTITION ON BOTH SIDES, PARTITION PERIMETER, AND ALL PENETRATIONS WITH CONT. ACOUSTICAL SEALANT (USE SEALANT INDICATED IN ITEM ABOVE, IN LIEU OF ACOUSTICAL SEALANT, AT PARTITIONS DESIGNATED AS FIRE-RATED PARTITIONS)

INTERIOR CMU PARTITION NOTES

1. CMU PARTITION BRACING
   A. WHERE BRACING METHODS BETWEEN THIS SHEET AND STRUCT. CONFLICT, STRUCT. SHALL OVERRIDE, NOTIFY ARCH. PRIOR TO INSTALLATION.
   B. PROVIDE INTERMEDIATE BRACING AT ALL CMU PARTITIONS AT CONDITIONS AS INDICATED ON THE "PARTITION TYPES-TYP CMU WALL BRACING" DETAIL.
2. REFER TO WALL SECTIONS FOR THE USE OF STARTER COURSES AT THE BASE OF INTERIOR PARTITIONS.
3. PROVIDE CMU LINTELS FOR ALL OPENINGS IN INTERIOR CMU PARTITIONS, COORD. WITH STRUCT. DOCUMENTS.
4. PROVIDE 3/4" SPACE BETWEEN TOP OF CMU PARTITION AND STRUCTURE AND OR DECK ABOVE FOR POTENTIAL DEFLECTION, SEAL AS INDICATED ON PARTITION TYPE, OR AS INDICATED IN THESE NOTES.
5. REFER TO STRUCT. DOCUMENTS FOR ALL REINFORCING, BOND BEAM LOCATIONS, AND LINTEL SCHEDULES.
6. LOCATE CONTROL JOINTS IN CMU PARTITIONS AS FOLLOWS, U.N.O. BY STRUCT.
   A. PARTITIONS EXCEEDING 25'-0" IN PLAN LENGTH
   B. WHERE PARTITION ABUTS A STRUCTURAL ELEMENT OF DISSIMILAR WALL
   C. AT EXPANSION JOINTS
   D. REFER TO DETAILS FOR ADDITIONAL LOCATIONS
7. FIRE-RATED PARTITIONS
   A. REFER TO THE UL FIRE RESISTANCE DIRECTORY FOR DETAILED DESCRIPTIONS OF FIRE-RATED PARTITIONS
   B. FILL ALL GAPS AND DECK VOIDS WITH CONT. FIRESAFING INSUL.
   C. SEAL FIRE-RATED PARTITION PERIMETER AND ALL PENETRATIONS WITH CONT. FIRE-RATED SEALANT

PARTITION SYMBOL LEGEND

- CMU BLOCK - REFER TO TABLE FOR THICKNESS
- CONT. BOND BEAM REINFORCED W/ (2) #4 CONT. UNO BY STRUCTURE - REFER TO TABLE FOR THICKNESS
- CONT. BOND BEAM BLOCK - REFER TO TABLE FOR THICKNESS REINFORCE W/ CONT. REBAR @ 9'-0" A.F.F.: - (2) #4 @ 6" CMU - (2) #5 @ 8" CMU UNO BY STRUCTURE
- SOUND ATTENUATION BLANKETS
- SCHEDULED CEILING

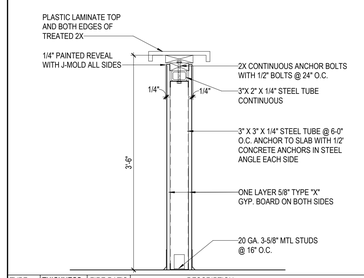

TYPE	THICKNESS	FIRE RAT'G	DESCRIPTION
S3.P	3 5/8"	NONE	3 5/8" METAL STUDS PARTIAL HEIGHT WITH CAP
S6.P	6"	NONE	6" METAL STUDS PARTIAL HEIGHT WITH CAP

11 PARTITION TYPE S-.P [PARTIAL WALL]
1" = 1'-0"

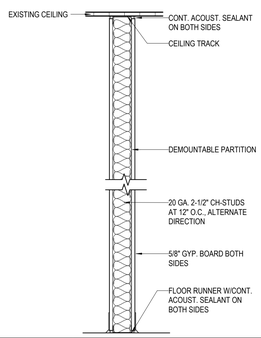

TYPE	THICKNESS	FIRE RAT'G	DESCRIPTION	STC
S3.C	3 5/8"	NONE	3 5/8" METAL STUDS ABOVE CEILING	-
S6.C	6"	NONE	3 5/8" METAL STUDS ABOVE CLG. NO INSULATION	-

10 PARTITION TYPE - S- .R [TO CLG]
1" = 1'-0"
ONLY FOR INTERIOR RENOVATION PROJECTS

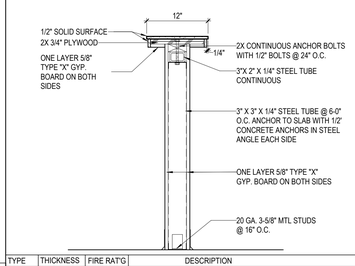

TYPE	THICKNESS	FIRE RAT'G	DESCRIPTION
S3.P	3 5/8"	NONE	3 5/8" METAL STUDS PARTIAL HEIGHT WITH SOLID SURFACE
S6.P	6"	NONE	6" METAL STUDS PARTIAL HEIGHT WITH SOLID SURFACE

09 PARTITION TYPE S-.P 2 [PARTIAL WALL]
1" = 1'-0"

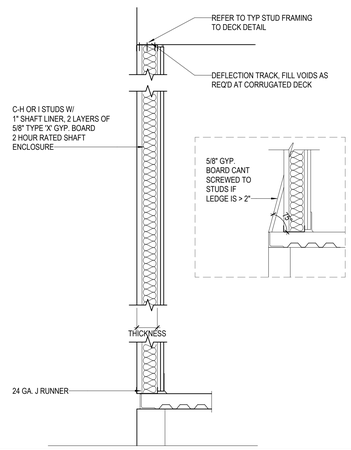

TYPE	THICKNESS	FIRE RAT'G	DESCRIPTION	STC	UL
J4.1	4"	1HR	4" CH'I MTL STUD TO DECK (ONE LAYER 5/8" GYP BD)		415A
J4.2	4"	2HR	4" CH'I MTL STUD TO DECK	53	
J6.2	6"	2HR	6" CH'I MTL STUD TO DECK	58	

08 PARTITION TYPE - J SHAFT WALL
1" = 1'-0"

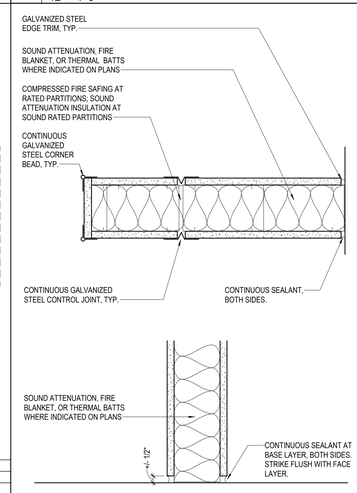

7 PARTITION TYPES-TYP DETAILS
12" = 1'-0"

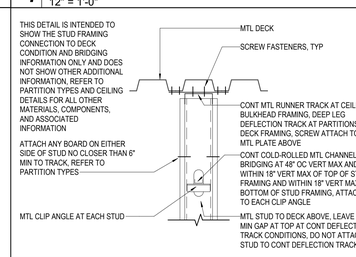

07 PARTITION TYPES-STUD FRAMING TO DECK
1 1/2" = 1'-0"

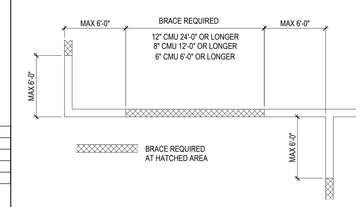

02 PARTITION TYPES-TYP CMU WALL BRACING
12" = 1'-0"

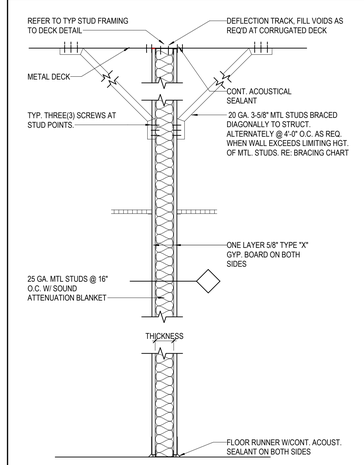

TYPE	THICKNESS	FIRE RAT'G	DESCRIPTION	STC	UL
S3	3 5/8"	*	3 5/8" METAL STUDS TO DECK	45	**
S6	6"	*	3 5/8" METAL STUDS TO DECK	46	**

* REFER TO G-100 SERIES FOR FIRE RATING REQUIREMENTS
** REFER TO G-030 FOR FIRE RATED ASSEMBLIES

06 PARTITION TYPE - S [TO DECK]
1" = 1'-0"

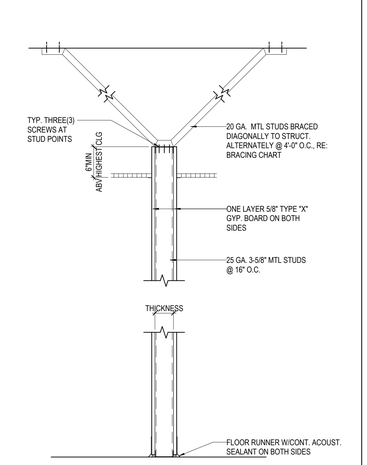

TYPE	THICKNESS	FIRE RAT'G	DESCRIPTION	STC
F3	3 5/8"	NONE	3 5/8" METAL STUDS TO DECK	N/A
F6	6"	NONE	6" METAL STUDS TO DECK	N/A

05 PARTITION TYPE - S-.C [ABOVE CLG]
1" = 1'-0"

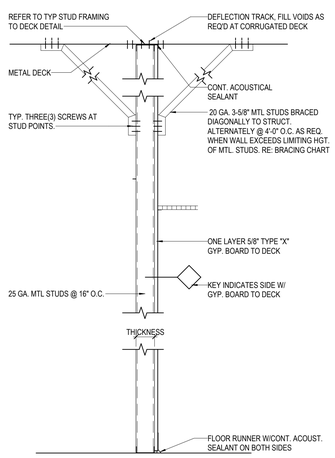

TYPE	THICKNESS	FIRE RAT'G	DESCRIPTION	STC
F3	3 5/8"	NONE	3 5/8" METAL STUDS TO DECK	N/A
F6	6"	NONE	6" METAL STUDS TO DECK	N/A

04 PARTITION TYPE - F TO DECK]
1" = 1'-0"

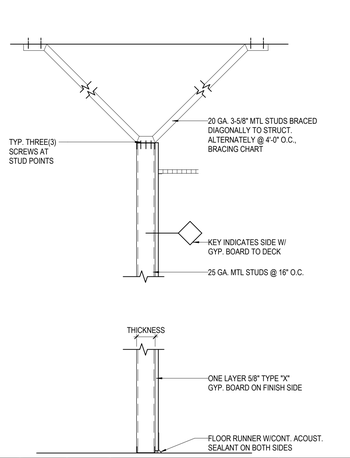

TYPE	THICKNESS	FIRE RAT'G	DESCRIPTION	STC
F1.C	7/8"	NONE	7/8" HAT CHANNELS ABOVE CEILING	N/A
F2.C	2 1/2"	NONE	2 1/2" METAL STUDS ABOVE CEILING	N/A
F3.C	3 5/8"	NONE	3 5/8" METAL STUDS ABOVE CEILING	N/A
F6.C	6"	NONE	6" METAL STUDS ABOVE CEILING	N/A

03 PARTITION TYPE - F-.C [ABOVE CLG]
1" = 1'-0"

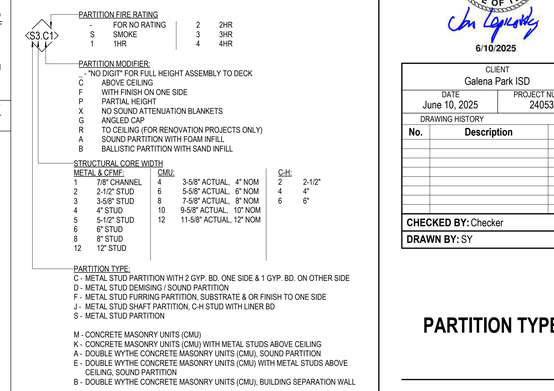

01 PARTITION TAG LEGEND
1/8" = 1'-0"

PBK
www.pbk.com
TX FIRM: BR 1608
HOUSTON, TX 713-965-0608

PKG 3A - GPHS NEW FIELDHOUSE
1000 Keene St.
Galena Park, TX 77547

CLIENT PROJECT NO: 240539

ISSUE FOR PROPOSAL

Galena Park ISD
EXCELLENCE IN ALL FOR ALL OF US

REGISTERED ARCHITECT JAN LEGG 12872 STATE OF TEXAS

6/10/2025

CLIENT	
Galena Park ISD	
DATE: June 10, 2025	PROJECT NUMBER: 240539

DRAWING HISTORY

No.	Description	Date

CHECKED BY: Checker
DRAWN BY: SY

PARTITION TYPES

A-801A

Plot Stamp:
6/10/2025 5:35:27 PM

PARTITION TYPES
A-801B

FOR BLUEBEAM LABELING/DOOR:

0"
1"

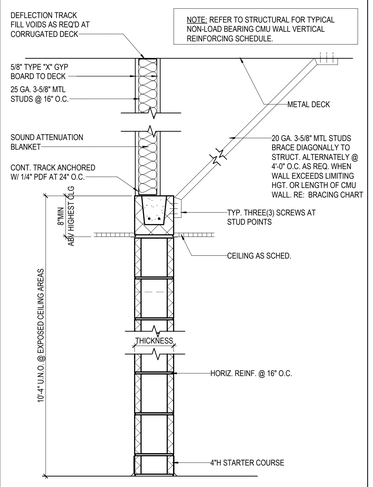

TYPE	THICKNESS	FIRE RAT'G	DESCRIPTION	STC	UL
K6	5 5/8"	*	6" CMU W/ METAL STUDS TO DECK	47	**
K8	7 5/8"	*	8" CMU W/ METAL STUDS TO DECK	50	**

* REFER TO G-100 SERIES FOR FIRE RATING REQUIREMENTS
** REFER TO G-030 FOR FIRE RATED ASSEMBLIES

06 PARTITION TYPE K- [TO DECK]
1" = 1'-0"

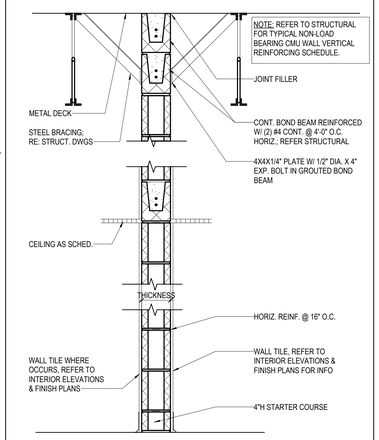

TYPE	THICKNESS	FIRE RAT'G	DESCRIPTION	STC	UL
M4.T	3 5/8"	*	4" CMU W/ TILE FINISH	42	*
M6.T	5 5/8"	*	6" CMU W/ TILE FINISH	48	*
M8.T	7 5/8"	*	8" CMU W/ TILE FINISH	51	*

* REFER TO G-100 SERIES FOR FIRE RATING REQUIREMENTS
** REFER TO G-030 FOR FIRE RATED ASSEMBLIES

05 PARTITION TYPE M-.T [TO DECK W FURRING]
1" = 1'-0"

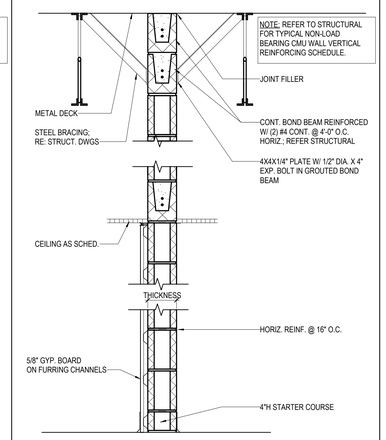

TYPE	THICKNESS	FIRE RAT'G	DESCRIPTION	STC	UL
M6.F	5 5/8"	*	6" CMU W/ GYP BD ON 7/8" FURRING	48	*
M6.F1	5 5/8"	*	6" CMU W/ GYP BD ON 1 1/2" FURRING	49	*
M8.F	7 5/8"	*	8" CMU W/ GYP BD ON 7/8" FURRING	51	*
M8.F1	7 5/8"	*	8" CMU W/ GYP BD ON 1 1/2" FURRING	52	*

* REFER TO G-100 SERIES FOR FIRE RATING REQUIREMENTS
** REFER TO G-030 FOR FIRE RATED ASSEMBLIES

04 PARTITION TYPE M-.F [TO DECK W FURRING]
1" = 1'-0"

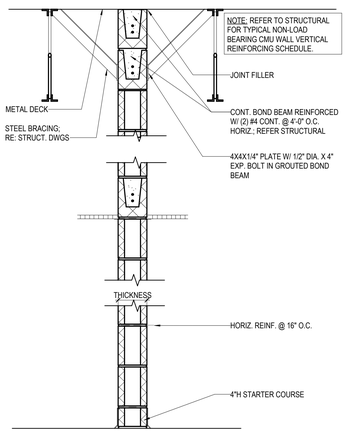

TYPE	THICKNESS	FIRE RAT'G	DESCRIPTION	STC	UL
M6	5 5/8"	*	6" CMU TO DECK	47	**
M8	7 5/8"	*	8" CMU TO DECK	50	**
M12	11 5/8"	*	12" CMU TO DECK	55	**

* REFER TO G-100 SERIES FOR FIRE RATING REQUIREMENTS
** REFER TO G-030 FOR FIRE RATED ASSEMBLIES

03 PARTITION TYPE M- [TO DECK]
1" = 1'-0"

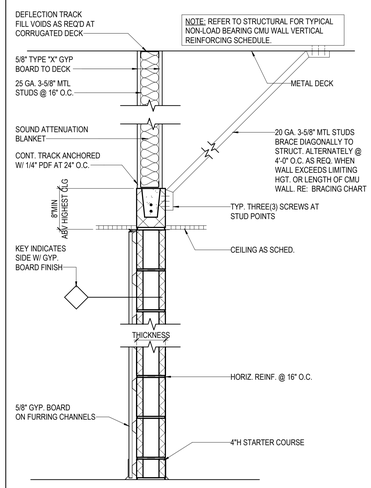

TYPE	THICKNESS	FIRE RAT'G	DESCRIPTION	STC	UL
K6.F	5 5/8"	*	6" CMU W/ GYP BD ON 7/8" FURRING	48	*
K6.F1	5 5/8"	*	6" CMU W/ GYP BD ON 1 1/2" FURRING	49	*
K8.F	7 5/8"	*	8" CMU W/ GYP BD ON 7/8" FURRING	51	*
K8.F1	7 5/8"	*	8" CMU W/ GYP BD ON 1 1/2" FURRING	52	*

* REFER TO G-100 SERIES FOR FIRE RATING REQUIREMENTS
** REFER TO G-030 FOR FIRE RATED ASSEMBLIES

07 PARTITION TYPE K-.F [TO DECK W FINISH]
1" = 1'-0"

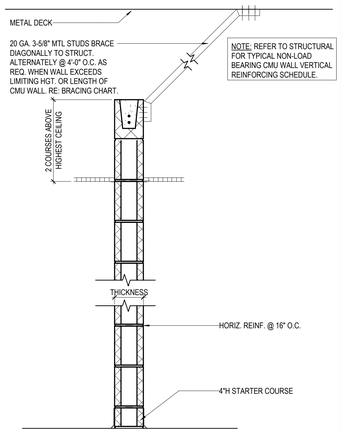

TYPE	THICKNESS	FIRE RAT'G	DESCRIPTION	STC
M4.C	3 5/8"	NONE	4" CMU ABOVE CEILING	-
M6.C	5 5/8"	NONE	6" CMU ABOVE CEILING	-
M8.C	7 5/8"	NONE	8" CMU ABOVE CEILING	-
M12.C	11 5/8"	NONE	12" CMU ABOVE CEILING	-

02 PARTITION TYPE M-.C [ABOVE CEILING]
1" = 1'-0"

HOW TO USE THIS SHEET

1. NOT EVERY PARTITION TYPE SHOWN IS NECESSARILY INTENDED FOR USE ON THIS PROJECT, REFER TO FLOOR PLANS FOR REFERENCE MARKS INDICATING APPLICABLE PARTITION TYPES.
2. REFER TO BRACING DETAILS FOR SUPPORT OF THE TOP OF EACH PARTITION TYPE AND BRACING OF PARTITIONS THAT EXCEED LIMITING HEIGHT OF PARTITION TYPES.
3. REFER TO FINISH SCHEDULES FOR APPLIED FINISHES TO BOTH SIDES OF WALLS.
4. COORDINATE TOPS OF FINISHED WALLS WITH ADJACENT CEILING HEIGHTS PER SCHEDULES, SECTIONS AND OR DETAILS.
5. CONSULT ARCH. FOR ANY DISCREPANCIES OR QUESTIONS REGARDING PARTITIONS PRIOR TO INSTALLATION.

INTERIOR METAL STUD PARTITION NOTES

1. ALL METAL STUD PARTITIONS SHALL BE 25 GAUGE METAL STUDS AT 16" O.C. U.N.O., IF THE LIMITING HEIGHT FOR A 25 GAUGE METAL STUD PARTITION IS EXCEEDED, INCREASE GAUGE OF STUDS. NOTIFY ARCH. PRIOR TO INSTALLATION.
2. PROVIDE 20 GAUGE METAL STUDS, IN LIEU OF 25 GAUGE METAL STUDS, AT STUD WALL WITH TILE FINISHES.
3. METAL STUD PARTITION BRACING
   A. WHERE BRACING METHODS BETWEEN THIS SHEET AND STRUCT. CONFLICT, STRUCT. SHALL OVERRIDE, NOTIFY ARCH. PRIOR TO INSTALLATION
   B. PROVIDE INTERMEDIATE BRACING AT ALL METAL STUD PARTITIONS THAT EXCEED THE VERTICAL LIMIT HEIGHT OF METAL STUDS
   C. ALL BRACING SHALL BE AT STUD POINTS
4. SET ALL FLOOR TRACKS ON A CONTINUOUS RIBBON OF SEALANT.
5. USE CONT. DEEP LEG DEFLECTION TRACK AT TOP OF ALL PARTITION CONNECTIONS AT TOP-OF-DECK LOCATIONS, REFER TO "TYP STUD FRAMING TO DECK" DETAIL.
6. PROVIDE GLASS MAT GYPSUM SHEATHING BOARDS FULL HEIGHT AT ALL PARTITIONS AT SHOWERS, ADJACENT TO ALL PLUMBING FIXTURES, AND AT ALL PARTITIONS WITH TILE FINISHES.
7. PROVIDE TILE BACKER BOARDS FULL HEIGHT AT ALL PARTITIONS NOT AT SHOWERS, NOT ADJACENT TO PLUMBING FIXTURES, AND WITHOUT TILE FINISHES IN ALL TOILET ROOMS.
8. RIGIDLY BRACE ALL DOOR FRAMES AT THE HEAD, HINGE, AND STRIKE SIDES, RIGIDLY BRACE ALL WINDOW FRAMES AT THE HEAD, JAMBS, AND SILL.
9. LOCATE CONTROL JOINTS IN GYPSUM BOARD PARTITIONS AS FOLLOWS
   A. PARTITIONS OR FURRING EXCEEDING 30'-0" SPANS HORIZ. AND OR VERT.
   B. WHERE A PARTITION ABUTS A STRUCTURAL ELEMENT OR DISSIMILAR WALL
   C. AT CHANGES WITHIN PLANE OF PARTITION
   D. AT EXPANSION JOINTS
   E. AT BOTH JAMBS OF INTERIOR AND EXTERIOR DOOR FRAMES AND WINDOW FRAMES, ABOVE AND BELOW FOR FULL HEIGHT OF WALL
10. FIRE-RATED PARTITIONS
    A. REFER TO THE UL FIRE RESISTANCE DIRECTORY FOR DETAILED DESCRIPTIONS OF FIRE-RATED PARTITIONS
    B. PROVIDE TYPE "X" FIRE RESISTIVE GYPSUM BOARD, 5/8" THICK U.N.O.
    C. FILL ALL GAPS AND DECK VOIDS WITH CONT. FIRESAFING INSUL.
    D. SEAL BOTTOM OF PARTITION ON BOTH SIDES, PARTITION PERIMETER, AND ALL PENETRATIONS WITH CONT. FIRE-RATED SEALANT
11. PARTITIONS WITH SOUND ATTENUATION BATT INSUL. BLANKETS
    A. PROVIDE FULL THICK SOUND ATTENUATION BATT INSUL. BLANKETS FULL HEIGHT OF PARTITION U.N.O.
    B. FILL ALL GAPS AND DECK VOIDS WITH CONT. SOUND ATTENUATION SAFING INSUL.
    C. TAPE AND BED OR CAULK ALL JOINTS BETWEEN GYPSUM BOARD PANELS
    D. SEAL BOTTOM OF PARTITION ON BOTH SIDES, PARTITION PERIMETER, AND ALL PENETRATIONS WITH CONT. ACOUSTICAL SEALANT (USE SEALANT INDICATED IN ITEM ABOVE, IN LIEU OF ACOUSTICAL SEALANT, AT PARTITIONS DESIGNATED AS FIRE-RATED PARTITIONS)

INTERIOR CMU PARTITION NOTES

1. CMU PARTITION BRACING
   A. WHERE BRACING METHODS BETWEEN THIS SHEET AND STRUCT. CONFLICT, STRUCT. SHALL OVERRIDE, NOTIFY ARCH. PRIOR TO INSTALLATION.
   B. PROVIDE INTERMEDIATE BRACING AT ALL CMU PARTITIONS AT CONDITIONS AS INDICATED ON THE "PARTITION TYPES-TYP CMU WALL BRACING" DETAIL.
2. REFER TO WALL SECTIONS FOR THE USE OF STARTER COURSES AT THE BASE OF INTERIOR PARTITIONS.
3. PROVIDE CMU LINTELS FOR ALL OPENINGS IN INTERIOR CMU PARTITIONS, COORD. WITH STRUCT. DOCUMENTS.
4. PROVIDE 3/4" SPACE BETWEEN TOP OF CMU PARTITION AND STRUCTURE AND OR DECK ABOVE FOR POTENTIAL DEFLECTION, SEAL AS INDICATED ON PARTITION TYPE, OR AS INDICATED IN THESE NOTES.
5. REFER TO STRUCT. DOCUMENTS FOR ALL REINFORCING, BOND BEAM LOCATIONS, AND LINTEL SCHEDULES.
6. LOCATE CONTROL JOINTS IN CMU PARTITIONS AS FOLLOWS, U.N.O. BY STRUCT.
   A. PARTITIONS EXCEEDING 25'-0" IN PLAN LENGTH
   B. WHERE PARTITION ABUTS A STRUCTURAL ELEMENT OF DISSIMILAR WALL
   C. AT EXPANSION JOINTS
   D. REFER TO DETAILS FOR ADDITIONAL LOCATIONS
7. FIRE-RATED PARTITIONS
   A. REFER TO THE UL FIRE RESISTANCE DIRECTORY FOR DETAILED DESCRIPTIONS OF FIRE-RATED PARTITIONS
   B. FILL ALL GAPS AND DECK VOIDS WITH CONT. FIRESAFING INSUL.
   C. SEAL FIRE-RATED PARTITION PERIMETER AND ALL PENETRATIONS WITH CONT. FIRE-RATED SEALANT

PARTITION SYMBOL LEGEND

- CMU BLOCK - REFER TO TABLE FOR THICKNESS
- CONT. BOND BEAM REINFORCED W/ (2) #4 CONT. UNO BY STRUCTURE - REFER TO TABLE FOR THICKNESS
- CONT. BOND BEAM BLOCK - REFER TO TABLE FOR THICKNESS REINFORCE W/ CONT. REBAR @ 9'-0" A.F.F.:
  - (2) #4 @ 6" CMU
  - (2) #5 @ 8" CMU
  UNO BY STRUCTURE
- SOUND ATTENUATION BLANKETS
- SCHEDULED CEILING

<S3.C1>

PARTITION FIRE RATING

-	FOR NO RATING	2	2HR
S	SMOKE	3	3HR
1	1HR	4	4HR

PARTITION MODIFIER:
- "NO DIGIT" FOR FULL HEIGHT ASSEMBLY TO DECK
- C ABOVE CEILING
- F WITH FINISH ON ONE SIDE
- P PARTIAL HEIGHT
- X NO SOUND ATTENUATION BLANKETS
- G ANGLED CAP
- R TO CEILING (FOR RENOVATION PROJECTS ONLY)
- A SOUND PARTITION WITH FOAM INFILL
- B BALLISTIC PARTITION WITH SAND INFILL

STRUCTURAL CORE WIDTH

METAL & CEMF:		CMU:		C-H:	
1	7/8" CHANNEL	4	3-5/8" ACTUAL, 4" NOM	2	2-1/2"
2	2-1/2" STUD	6	5-5/8" ACTUAL, 6" NOM	4	4"
3	3-5/8" STUD	8	7-5/8" ACTUAL, 8" NOM	6	6"
4	4" STUD	10	9-5/8" ACTUAL, 10" NOM		
5	5-1/2" STUD	12	11-5/8" ACTUAL, 12" NOM		
6	6" STUD				
8	8" STUD				
12	12" STUD				

PARTITION TYPE:
- C - METAL STUD PARTITION WITH 2 GYP. BD. ONE SIDE & 1 GYP. BD. ON OTHER SIDE
- D - METAL STUD DEMISING / SOUND PARTITION
- F - METAL STUD FURRING PARTITION, SUBSTRATE & OR FINISH TO ONE SIDE
- J - METAL STUD SHAFT PARTITION, C-H STUD WITH LINER BD
- S - METAL STUD PARTITION

- M - CONCRETE MASONRY UNITS (CMU)
- K - CONCRETE MASONRY UNITS (CMU) WITH METAL STUDS ABOVE CEILING
- A - DOUBLE WYTHE CONCRETE MASONRY UNITS (CMU), SOUND PARTITION
- E - DOUBLE WYTHE CONCRETE MASONRY UNITS (CMU) WITH METAL STUDS ABOVE CEILING, SOUND PARTITION
- B - DOUBLE WYTHE CONCRETE MASONRY UNITS (CMU), BUILDING SEPARATION WALL

01 PARTITION TAG LEGEND Copy 1
1/8" = 1'-0"

PBK
HOUSTON, TX
713-965-0608
TX FIRM: BR 1608
www.pbk.com

PKG 3A - GPHS NEW FIELDHOUSE

1000 Keene St,
Galena Park, TX 77547

CLIENT PROJECT NO: 240539

ISSUE FOR PROPOSAL

Galena Park ISD

REGISTERED ARCHITECT JAMES LEDOUX STATE OF TEXAS

6/10/2025

CLIENT	
Galena Park ISD	
DATE: June 10, 2025	PROJECT NUMBER: 240539

DRAWING HISTORY

No.	Description	Date

CHECKED BY: Checker
DRAWN BY: SY

PARTITION TYPES

A-801B

Plot Stamp:
6/10/2025 5:35:28 PM

DOOR SCHEDULE
A-810
FOR BLUEBEAM LABELING/DOOR:

0"
1"

1. BIG NOTE
2. BIG NOTE

DOOR SCHEDULE

DOOR			PANEL			FRAME			GENERAL			
NUMBER	WIDTH	HEIGHT	TYPE	MATL	FINISH	TYPE	MATL	FINISH	FIRE RATING	STC	HARDWARE SET	REMARKS
LEVEL 1												
1901A	3'-0"	6'-10"	F	Wood	TF-1 (Thermafoil)	001	AL-2	AL-2			111	BY DEMOUNTABLE WALL MFR
1901B	3'-0"	6'-10"	F	08_Hollow Metal Doors, HM	09_Paint, PT-1	001	08_Hollow Metal Doors, HM	09_Paint, PT-1			102	
1902	6'-0"	6'-10"	NV-1	08_Hollow Metal Doors, HM	09_Paint, PT-1	001	08_Hollow Metal Doors, HM	09_Paint, PT-1			101	
1903	3'-0"	6'-10"	F	08_Hollow Metal Doors, HM	09_Paint, PT-1	001	08_Hollow Metal Doors, HM	09_Paint, PT-1			104	
1904A	3'-0"	6'-10"	F	Wood	TF-1 (Thermafoil)	001	AL-2	AL-2			111	BY DEMOUNTABLE WALL MFR
1904B	3'-0"	6'-10"	F	08_Hollow Metal Doors, HM	09_Paint, PT-1	001	08_Hollow Metal Doors, HM	09_Paint, PT-1			102	
1905	3'-0"	6'-10"	F	Wood	TF-1 (Thermafoil)	001	AL-2	AL-2			107	BY DEMOUNTABLE WALL MFR
1906	4'-0"	6'-10"	F	Wood	TF-1 (Thermafoil)	001	AL-2	AL-2			106	BY DEMOUNTABLE WALL MFR
1907	4'-0"	6'-10"	F	08_Hollow Metal Doors, HM	09_Paint, PT-1	001	08_Hollow Metal Doors, HM	09_Paint, PT-1			104	
1908A	4'-0"	6'-10"	F	Wood	TF-1 (Thermafoil)	001	AL-2	AL-2			103	
1908B	6'-0"	4'-0"	OHCS	Stainless Steel	Stainless Steel		AL-2	AL-2			114	
1910	3'-0"	6'-10"	F	Wood	TF-1 (Thermafoil)	001	AL-2	AL-2			111	BY DEMOUNTABLE WALL MFR
1911	3'-0"	6'-10"	F	Wood	TF-1 (Thermafoil)	001	AL-2	AL-2			111	BY DEMOUNTABLE WALL MFR
1912	3'-0"	6'-10"	F	Wood	TF-1 (Thermafoil)	001	AL-2	AL-2			107	BY DEMOUNTABLE WALL MFR
1913	3'-0"	6'-10"	F	08_Hollow Metal Doors, HM	09_Paint, PT-1	001	08_Hollow Metal Doors, HM	09_Paint, PT-1			104	
1914	3'-0"	6'-10"	F	Wood	TF-1 (Thermafoil)	001	AL-2	AL-2			111	BY DEMOUNTABLE WALL MFR
1915	3'-0"	6'-10"	F	Wood	TF-1 (Thermafoil)	001	AL-2	AL-2			111	BY DEMOUNTABLE WALL MFR
1916	3'-0"	6'-10"	F	Wood	TF-1 (Thermafoil)	001	AL-2	AL-2			111	BY DEMOUNTABLE WALL MFR
1917A	3'-0"	6'-10"	HG-1	Wood	TF-1 (Thermafoil)	001	AL-2	AL-2			108	
1917B	3'-0"	6'-10"	HG-1	Wood	TF-1 (Thermafoil)	001	AL-2	AL-2			108	
1918	3'-0"	6'-10"	HG-1	Wood	TF-1 (Thermafoil)	012	AL-2	AL-2			108	
1919	3'-0"	6'-10"	F	Wood	TF-1 (Thermafoil)	001	AL-2	AL-2			111	BY DEMOUNTABLE WALL MFR
1920	3'-0"	6'-10"	F	Wood	TF-1 (Thermafoil)	001	AL-2	AL-2			110.1	BY DEMOUNTABLE WALL MFR
1921	3'-0"	6'-10"	F	Wood	TF-1 (Thermafoil)	001	AL-2	AL-2			111	BY DEMOUNTABLE WALL MFR
1922	3'-0"	6'-10"	F	Wood	TF-1 (Thermafoil)	001	AL-2	AL-2			110	
1923	3'-0"	6'-10"	F	Wood	TF-1 (Thermafoil)	001	AL-2	AL-2			110	
1924	3'-0"	6'-10"	F	Wood	TF-1 (Thermafoil)	001	AL-2	AL-2			106	BY DEMOUNTABLE WALL MFR
1925	4'-0"	6'-10"	F	Wood	TF-1 (Thermafoil)	001	AL-2	AL-2			108	
1926	3'-0"	6'-10"	F	Wood	TF-1 (Thermafoil)	001	AL-2	AL-2			110.2	BY DEMOUNTABLE WALL MFR
1927A	6'-0"	7'-0"	FG-1	AL-1	ALUM	RE ELEV	AL-1	AL-1			113.1	
1927B	6'-0"	7'-0"	FG-1	AL-1	ALUM	RE ELEV	AL-1	AL-1			113.1	
C1900A	6'-0"	7'-0"	FG-1	AL-1	AL-1	RE ELEV	AL-1	AL-1			113	2
C1900B	6'-0"	7'-0"	FG-1	AL-1	AL-1	RE ELEV	AL-1	AL-1			113	2
E1000A	3'-0"	6'-10"	F	Wood	TF-1 (Thermafoil)	001	AL-2	AL-2			115	
34												
LEVEL 2												
1951	3'-0"	6'-10"	HG-1	Wood	TF-1 (Thermafoil)	001	AL-2	AL-2			107	BY DEMOUNTABLE WALL MFR
1952	3'-0"	6'-10"	F	Wood	TF-1 (Thermafoil)	001	AL-2	AL-2			110	BY DEMOUNTABLE WALL MFR
1953	3'-0"	6'-10"	FG-1	Wood	TF-1 (Thermafoil)	001	AL-2	AL-2			109	BY DEMOUNTABLE WALL MFR
1954	3'-0"	6'-10"	NV-1	Wood	TF-1 (Thermafoil)	001	AL-2	AL-2			108	BY DEMOUNTABLE WALL MFR
1955	3'-0"	6'-10"	NV-1	Wood	TF-1 (Thermafoil)	001	AL-2	AL-2			108	BY DEMOUNTABLE WALL MFR
1956A	3'-0"	6'-10"	HG-1	Wood	TF-1 (Thermafoil)	001	AL-2	AL-2			107	BY DEMOUNTABLE WALL MFR
1956B	3'-0"	6'-10"	HG-1	Wood	TF-1 (Thermafoil)	001	AL-2	AL-2			107	BY DEMOUNTABLE WALL MFR
1957	3'-0"	6'-10"	F	Wood	TF-1 (Thermafoil)	001	AL-2	AL-2			108	BY DEMOUNTABLE WALL MFR
1958	3'-0"	6'-10"	NV-1	Wood	TF-1 (Thermafoil)	001	AL-2	AL-2			108	BY DEMOUNTABLE WALL MFR
1959	3'-0"	6'-10"	NV-1	Wood	TF-1 (Thermafoil)	001	AL-2	AL-2			108	BY DEMOUNTABLE WALL MFR
1960	3'-0"	6'-10"	F	Wood	TF-1 (Thermafoil)	001	AL-2	AL-2			106	BY DEMOUNTABLE WALL MFR
1961	3'-0"	6'-10"	F	Wood	TF-1 (Thermafoil)	001	AL-2	AL-2			106	BY DEMOUNTABLE WALL MFR
1962	4'-0"	6'-10"	F	Wood	TF-1 (Thermafoil)	001	AL-2	AL-2			106	BY DEMOUNTABLE WALL MFR
1963	4'-0"	6'-10"	F	Wood	TF-1 (Thermafoil)	001	AL-2	AL-2			103	BY DEMOUNTABLE WALL MFR
1964	3'-0"	6'-10"	F	Wood	TF-1 (Thermafoil)	001	AL-2	AL-2			110.3	BY DEMOUNTABLE WALL MFR
1965	3'-0"	6'-10"	F	Wood	TF-1 (Thermafoil)	001	AL-2	AL-2			110.3	BY DEMOUNTABLE WALL MFR
1966	4'-0"	6'-10"	F	Wood	TF-1 (Thermafoil)	001	AL-2	AL-2			106	BY DEMOUNTABLE WALL MFR
1966B	4'-0"	6'-10"	F	Wood	TF-1 (Thermafoil)	001	AL-2	AL-2			106	BY DEMOUNTABLE WALL MFR
1967	4'-0"	6'-10"	F	Wood	TF-1 (Thermafoil)	001	AL-2	AL-2			106	BY DEMOUNTABLE WALL MFR
1968A	3'-0"	6'-10"	HG-1	Wood	TF-1 (Thermafoil)	001	AL-2	AL-2			107	BY DEMOUNTABLE WALL MFR
1968B	3'-0"	6'-10"	HG-1	Wood	TF-1 (Thermafoil)	001	AL-2	AL-2			107	BY DEMOUNTABLE WALL MFR
1969A	3'-0"	6'-10"	HG-1	Wood	TF-1 (Thermafoil)	001	AL-2	AL-2			107	BY DEMOUNTABLE WALL MFR
1969B	3'-0"	6'-10"	HG-1	Wood	TF-1 (Thermafoil)	001	AL-2	AL-2			107	BY DEMOUNTABLE WALL MFR
1970A	3'-0"	6'-10"	HG-1	Wood	TF-1 (Thermafoil)	001	AL-2	AL-2			108	
1970B	3'-0"	6'-10"	HG-1	Wood	TF-1 (Thermafoil)	001	AL-2	AL-2			108	
1970C	12'-0"	5'-2"	OHCG	Stainless Steel	Stainless Steel		AL-2	AL-2			114	
1971A	4'-0"	6'-10"	F	Wood	TF-1 (Thermafoil)	001	AL-2	AL-2			106	BY DEMOUNTABLE WALL MFR
1971B	4'-0"	6'-10"	F	Wood	TF-1 (Thermafoil)	001	AL-2	AL-2			106	BY DEMOUNTABLE WALL MFR
C1951A	3'-0"	6'-10"	HG-1	Wood	TF-1 (Thermafoil)	001	AL-2	AL-2			112	BY DEMOUNTABLE WALL MFR
C1951B	3'-0"	6'-10"	HG-1	Wood	TF-1 (Thermafoil)	001	AL-2	AL-2			112	BY DEMOUNTABLE WALL MFR
30												
Grand Total: 64												

DOOR SCHEDULE REMARKS

1. ELEC. DOOR OPENER W/ HC BUTTON ON INSIDE AND OUTSIDE OF DOOR
2. ELEC. CONTROLLED ACCESS HARDWARE WITH CARD READER
3. ELEC. CONTROLLED ACCESS HARDWARE WITH PUSH-BUTTON
4. ELEC. CONTROLLED ACCESS HARDWARE, ROUGH-IN ONLY
5. DOOR BUZZER
6. DOOR CHIME ON OPEN
7. MAGNETIC HOLD-OPEN, CONNECT TO FIRE ALARM
8. MAGNETIC HOLD-OPEN, CONNECT TO SECURITY SYSTEM
9. SOUND DOOR

OPERABLE WALLS, OVERHEAD DOORS AND GRILLES

10. SOUND RATED DOOR ASSEMBLY, STC AS SPECIFIED
11. WINDSTORM DOOR HARDWARE SHALL BE TESTED AS PART OF A COMPLETE DOOR OPENING ASSEMBLY. THE TESTED DOOR OPENING ASSEMBLY SHALL INCLUDE DOOR HARDWARE. THE ENTIRE DOOR OPENING, INCLUDING DOOR HARDWARE, SHALL BE BY DOOR MANUF.
12. ACOUSTICAL GLASS TO MEET FIRE DOOR ASSEMBLY REQUIREMENTS FOR FIRE RATING INDICATED
13. MANUAL OPERATION
14. ELEC MOTOR OPERATION WITH KEY SWITCH CONTROL, KEY SWITCH ON ONE SIDE OF DOOR ONLY
15. ELEC MOTOR OPERATION WITH KEY SWITCH CONTROL, KEY SWITCH ON BOTH SIDES OF DOOR
16. ELEC MOTOR OPERATION WITH PUSH-BUTTON CONTROL ON ONE SIDE OF DOOR ONLY
17. AUTOMATIC OPEN ON FIRE ALARM ACTIVATION U.N.O.
18. AUTOMATIC CLOSE ON FIRE ALARM ACTIVATION

PBK
www.pbk.com
TX FIRM: BR 1608
HOUSTON, TX
713-965-0608

PKG 3A - GPHS NEW FIELDHOUSE
1000 Keene St.
Galena Park, TX 77547
CLIENT PROJECT NO: 240539
ISSUE FOR PROPOSAL

Galena Park ISD

REGISTERED ARCHITECT JAN LEPICOVITZ 25572 STATE OF TEXAS

6/10/2025

CLIENT	
Galena Park ISD	
DATE: June 10, 2025	PROJECT NUMBER: 240539

DRAWING HISTORY

No.	Description	Date

CHECKED BY: TC
DRAWN BY: Author

DOOR SCHEDULE

A-810

Plot Stamp:
6/10/2025 5:35:28 PM

DOORS - PANEL & FRAME TYPES
A-811
FOR BLUEBEAM LABELINGDOOR:

0"
1"

MATERIALS

ALUM - ALUMINUM	**VL -** VINYL
HM - HOLLOW METAL	**PLAM -** PLASTIC LAMINATE
HG - HOLLOW METAL GALV	**WS -** WOOD, SOLID CORE
HS - HM 24 GA. STEEL	**WH -** WOOD, HOLLOW CORE
SS - STAINLESS STEEL	**PTD# -** PAINTED TYPE

REMARKS LEGEND

1. WITH EGRESS DEVICE
2. MAGNETIC DOOR HOLDER
3. FIRE DOOR
4. ELEVATOR MACHINE ROOM DOORS
5. ELECTRICAL ROOM DOORS
6. KICK PLATE ON BOTH SIDES
7. ACCESS PANEL DOOR
8. WITH CLOSER

GLAZING MATERIALS LEGEND

GI1
THERMALLY-INSULATED GLAZING UNIT, TYPE 1 (CLEAR)

GL1
LAMINATED SAFETY GLAZING, THERMALLY INSULATED UNIT, TYPE 1 (CLEAR)

GG1 (INTERIOR)
TEMPERED GLASS, CLEAR
(ALL INTERIOR GLAZING IS GT1 UNO)

DOOR FRAME LEGEND

ALUMINUM METAL FRAMES

SILL IN EXTERIOR MODULAR BRICK CMU WALL:	02 / A-851
JAMB IN EXTERIOR MODULAR BRICK CMU WALL:	08 / A-851
HEAD IN EXTERIOR MODULAR BRICK CMU WALL:	14 / A-851

HOLLOW METAL FRAMES

SILL IN EXTERIOR MODULAR BRICK CMU WALL:	01 / A-851
JAMB IN EXTERIOR MODULAR BRICK CMU WALL:	07 / A-851
HEAD IN EXTERIOR MODULAR BRICK CMU WALL:	13 / A-851

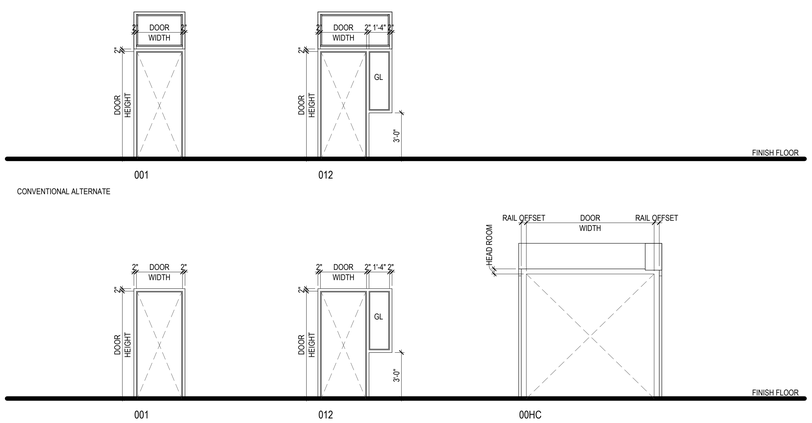

02 DOOR FRAME CONFIGURATIONS

1. EXTERIOR GLAZING SHALL BE GI1, U.N.O.
2. INTERIOR GLAZING SHALL BE GT1, U.N.O.

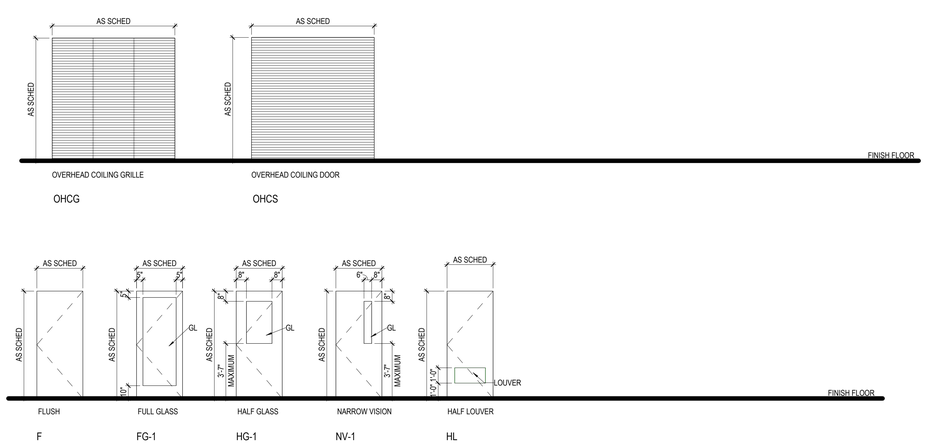

01 DOOR PANEL TYPES

PBK
www.pbk.com
TX FIRM: BR 1608
HOUSTON, TX
713-965-0608

PKG 3A - GPHS NEW FIELDHOUSE

1000 Keene St.
Galena Park, TX 77547

CLIENT PROJECT NO: 240539

ISSUE FOR PROPOSAL

Galena Park ISD
GP
PROMISE IS ALL FOR YOU

REGISTERED ARCHITECT
JAN LEPICOVSKY
25572
STATE OF TEXAS

6/10/2025

CLIENT	
Galena Park ISD	
DATE: June 10, 2025	PROJECT NUMBER: 240539

DRAWING HISTORY

No.	Description	Date

CHECKED BY: TC
DRAWN BY: JA

DOORS - PANEL & FRAME TYPES

A-811

Plot Stamp:
6/10/2025 5:35:29 PM

WINDOW AND STOREFRONT ELEVATIONS
A-831
FOR BLUEBEAM LABELING/OCR:

GENERAL GLAZING NOTES

1. PROVIDE BACK PAINTED SPANDREL GLAZING AT ALL EXTERIOR AND INTERIOR GLAZING PANELS ABOVE INTERIOR CEILINGS. COLOR AND PATTERN AS SELECTED BY ARCHITECT FROM MANUFACTURER'S FULL RANGE.

GENERAL WINDOW, CURTAIN WALL, & STOREFRONT ELEVATION NOTES

1. REFER TO FRAME DETAIL LEGEND FOR FRAME DETAILS, TYPICAL FOR ALL STOREFRONT, WINDOW, AND CURTAIN WALL FRAMES

GLAZING MATERIALS LEGEND

GI1
THERMALLY-INSULATED GLAZING UNIT, TYPE 1 (CLEAR)

GL1
LAMINATED SAFETY GLAZING, THERMALLY INSULATED UNIT, TYPE 1 (CLEAR)

GG1 (INTERIOR)
TEMPERED GLASS, CLEAR
(ALL INTERIOR GLAZING IS GT1 UNO)

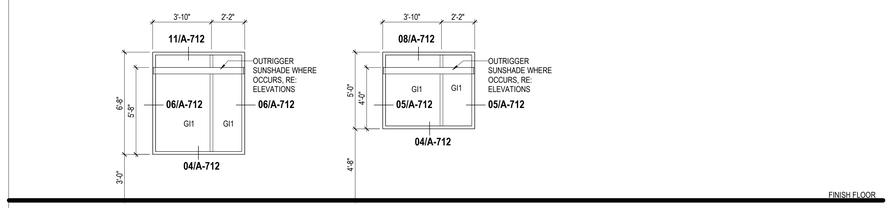

W1
FRAME TYPE: 2" x 4 1/2" ALUMINUM STOREFRONT
FRAME COLOR: CLEAR ANODIZED
THERMALY BROKEN: YES

W2
FRAME TYPE: 2" x 4 1/2" ALUMINUM STOREFRONT
FRAME COLOR: CLEAR ANODIZED
THERMALY BROKEN: YES

WINDOW TYPES
1/4" = 1'-0"

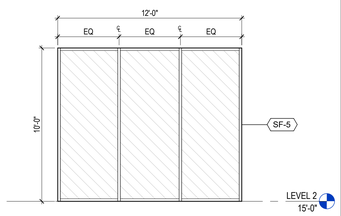

05 INTERIOR STOREFRONT TYPE SF-5
1/4" = 1'-0"

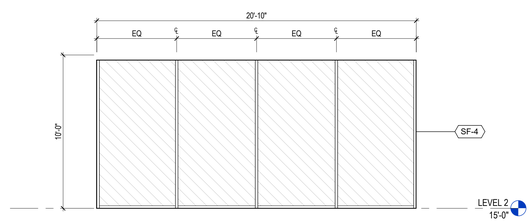

04 INTERIOR STOREFRONT TYPE SF-4
1/4" = 1'-0"

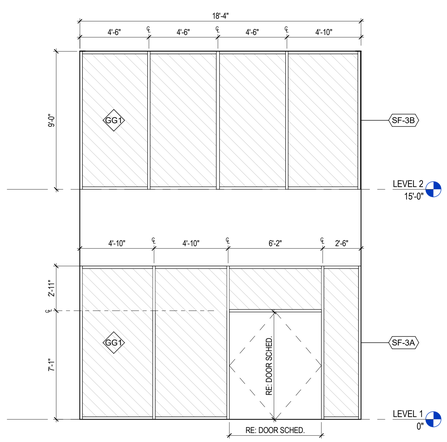

03 INTERIOR STOREFRONT TYPE SF-3 (A& B)
1/4" = 1'-0"

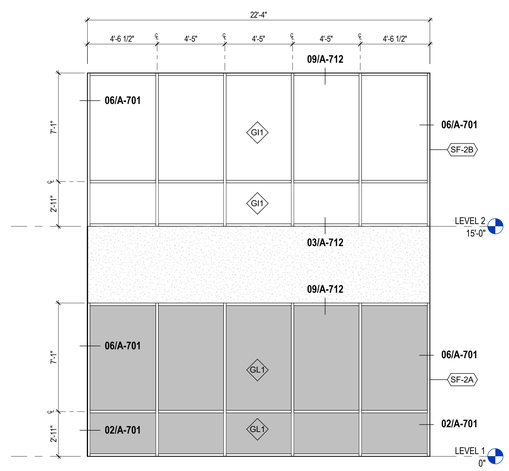

02 EXTERIOR STOREFRONT TYPE SF-2 (A & B)
1/4" = 1'-0"

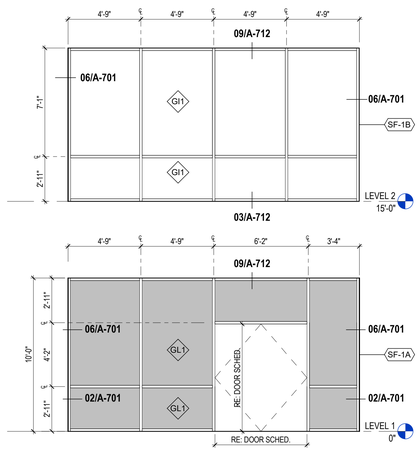

01 EXTERIOR STOREFRONT TYPE SF-1 (A & B)
1/4" = 1'-0"

PBK

www.pbk.com
TX FIRM: BR 1608
HOUSTON, TX
713-965-0608

PKG 3A - GPHS NEW FIELDHOUSE

1000 Keene St,
Galena Park, TX 77547

CLIENT PROJECT NO: 240539

ISSUE FOR PROPOSAL

Galena Park ISD
GP
EXCELLENCE IN ALL FOR ALL 18 ALL

REGISTERED ARCHITECT
JAN LEPICOVSKY
25572
STATE OF TEXAS

6/10/2025

CLIENT	
Galena Park ISD	
DATE	PROJECT NUMBER
June 10, 2025	240539

DRAWING HISTORY

No.	Description	Date

CHECKED BY: Checker
DRAWN BY: Author

WINDOW AND STOREFRONT ELEVATIONS

A-831

Plot Stamp:
6/11/2025 11:54:50 AM

DOOR DETAILS
A-851
FOR BLUEBEAM LABELING/DOOR:

0"
1"

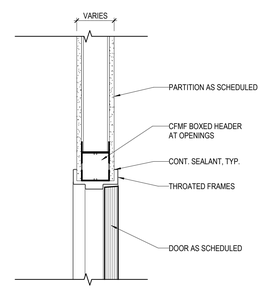

15 ALUM/HM DOOR HEAD @CFMF (INTERIOR)
1 1/2" = 1'-0"

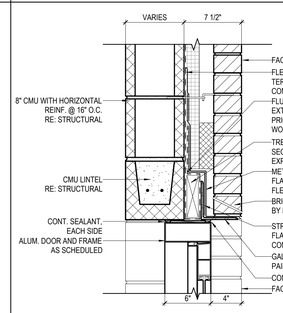

14 ALUM DOOR HEAD @CMU
1 1/2" = 1'-0"

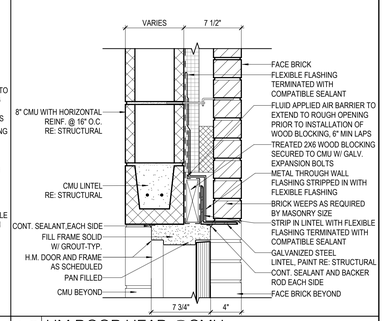

13 HM DOOR HEAD @CMU
1 1/2" = 1'-0"

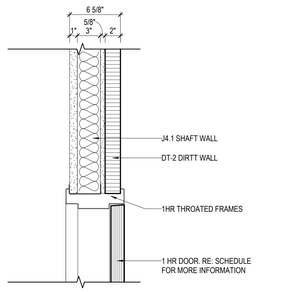

10 HM DOOR HEAD/JAMB @ ELEVATOR
1 1/2" = 1'-0"

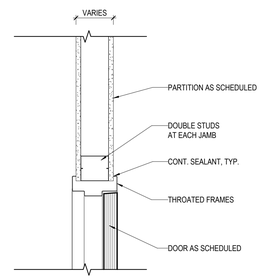

09 ALUM/HM DOOR JAMB @CFMF (INTERIOR)
1 1/2" = 1'-0"

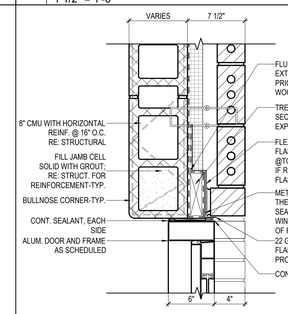

08 ALUM DOOR JAMB @CMU
1 1/2" = 1'-0"

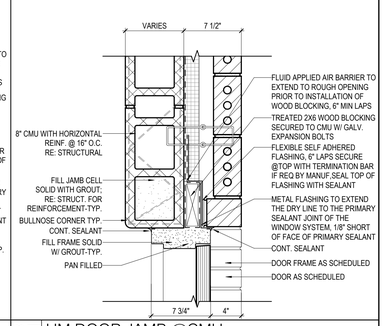

07 HM DOOR JAMB @CMU
1 1/2" = 1'-0"

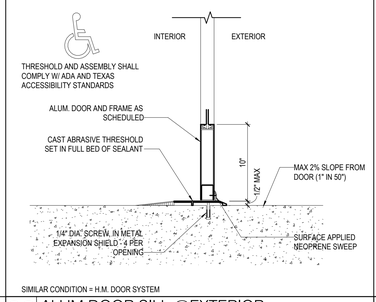

SIMILAR CONDITION = H.M. DOOR SYSTEM

03 ALUM DOOR SILL @EXTERIOR
1 1/2" = 1'-0"

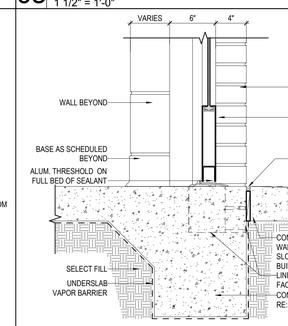

02 ALUM DOOR SILL @CMU
1 1/2" = 1'-0"

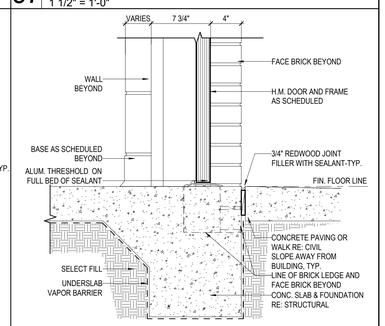

01 HM DOOR SILL @CMU
1 1/2" = 1'-0"

PBK
www.pbk.com
TX FIRM: BR 1608
HOUSTON, TX
713-965-0608

PKG 3A - GPHS NEW FIELDHOUSE

1000 Keene St.
Galena Park, TX 77547

CLIENT PROJECT NO: 240539

ISSUE FOR PROPOSAL

Galena Park ISD
GP
FOCUSED IN ALL FOR ALL

REGISTERED ARCHITECT
JAN LEPICOVITZ
25572
STATE OF TEXAS

6/10/2025

CLIENT	
Galena Park ISD	
DATE	PROJECT NUMBER
June 10, 2025	240539

DRAWING HISTORY

No.	Description	Date

CHECKED BY: Checker
DRAWN BY: Author

DOOR DETAILS

A-851

Plot Stamp:
6/10/2025 5:35:31 PM

PBK

HOUSTON, TX
713-965-0608

TX FIRM: BR 1608

www.pbk.com

PKG 3A - GPHS NEW FIELDHOUSE

1000 Keene St.
Galena Park, TX 77547

CLIENT PROJECT NO: 240539

ISSUE FOR PROPOSAL

REGISTERED ARCHITECT
JAN LEPICOVSKY
STATE OF TEXAS
25672

6/10/2025

CLIENT
Galena Park ISD

DATE
June 10, 2025

PROJECT NUMBER
240539

DRAWING HISTORY

No.	Description	Date

CHECKED BY: Checker
DRAWN BY: Author

WINDOW & LOUVER DETAILS

A-861

0" 1"

WINDOW & LOUVER DETAILS
A-861
FOR BLUEBEAM LABELING/OCR:

Plot Stamp:
6/10/2025 5:35:31 PM

FINISH SCHEDULE
A-900
FOR BLUEBEAM LABELINGOOR:

0"
1"

2405398 GP FIELD HOUSE - INTERIOR SCHEDULE OF FINISHES

ITEM	MANUFACTURER	DESCRIPTION	COLOR	SIZE	LOCATION	NOTES
CONCRETE FINISHING						
03 35 00.SC1					REF TO FINISH FLOOR PLAN	SEALED CONCRETE
STAIR SYSTEM						
05 52 00.MRP		SLAT STEEL RAILING SYSTEM	ARCH TO SELECT POWDER COATED FINISH		RAILING	
05 52 00.CDP		STEEL CANE DETECTION RAILING SYSTEM	ARCH TO SELECT POWDER COATED FINISH		CANE DETECTION	
05 73 00.IM1	MCNICOLS	PERFORATED METAL	PRMARY MATERIAL: CARBON STEEL, ARCH TO SELECT POWDER COATED FINISH	GAUGE: 16; HOLE PATTERN: 1/2" HEX ON 9/16" CTRS	PERFORATED METAL INILL PANEL AND STAIR RISER	
TRIMS / TRANSITIONS / NOSINGS						
05 75 00.DT1	SCHLUTER	JOLLY	AT, SATIN NICKEL ANODIZED ALUMINUM		TILE EDGES	
05 75 00.MT1	SCHLUTER	RENO-RAMP	AE, SATIN ANODIZED ALUMINUM		RAMP TRANSITION	
05 75 00.MT2	SCHLUTER	RENO-T	AT, SATIN NICKEL ANODIZED ALUMINUM		SAME HEIGHT TRANSITION	
05 75 00.MT3	SCHLUTER	RENO-TK	AT, SATIN NICKEL ANODIZED ALUMINUM		TILE TO CARPET	
05 75 00.MT4	SCHLUTER	DILEX-AHK	AT, SATIN NICKEL ANODIZED ALUMINUM		TILED FLOOR TO WALL COVE	WALL TILE TO FLOOR TILE
TILE						
09 30 00.T1	NOT IN USE	NOT IN USE				GROUT:
09 30 00.T2	NOT IN USE	NOT IN USE				GROUT:
09 30 00.T3	CROSSVILLE STUDIOS	URBANOLOGY BY STILE	COLOR: METROPOLIS CHISELED	24" X 48"	WALL TILE	GROUT:
09 30 00.T4	CROSSVILLE STUDIOS	URBANOLOGY BY STILE	COLOR: TITANIUM CHISELED	24" X 48"	WALL TILE	GROUT:
09 30 00.T5	EMSER	RAKU	COLOR: WHITE	3" X 12" MATTE	RESTROOM & SHOWER WALL TILE	GROUT:
09 30 00.T6	EMSER	RAKU	COLOR: CHARCOAL	3" X 12" GLOSSY	RESTROOM & SHOWER WALL TILE	GROUT:
09 30 00.T7	EMSER	RAKU	COLOR: MUSTARD	3" X 12" GLOSSY	RESTROOM & SHOWER WALL TILE	GROUT:
ACOUSTICAL CEILINGS						
09 51 00.ACP1	ARMSTRONG - ACOUSTIC CEILING PANEL/TILE	OPTIMA	WHITE	24'X24", 15/16", 3152	HIGH NRC	RE: RCPS
09 51 00.ACP2	NOT IN USE	NOT IN USE				
09 51 00.ACS1	ARMSTRONG - ACOUSTIC CEILING SYSTEM	PRELUDE XL	WHITE	15/16"	FIELD ACS	RE: RCPS
09 51 00.XCT6	ARMSTRONG CEILINGS	AXIOM CLASSIC	WHITE	6"	CEILING CLOUDS	RE: RCPS
LINEAR WOOD CEILINGS						
09 54 26.WCS1	9 WOOD	1100 CROSS PIECE GRILLE	SPECIES: WESTERN HEMLOCK; FINISH: DRIFTWOOD STAIN	1"X4" WITH 4" SPACING	ENTRANCE TO WEIGHT ROOM ON LVL 1	
LUXURY VINYL TILE						
09 65 00.RFT1	TARKETT	CONTOUR/ COLOR BEAM	C113 MOONLIGHT, EMBOSS: QUARRY	9" X 36"	FIELD	
09 65 00.RFT2	TARKETT	CONTOUR/ COLOR BEAM	C121 FLANNEL, EMBOSS: QUARRY	9" X 36"	ACCENT	
09 65 00.RFT3	TARKETT	CONTOUR/ COLOR BEAM	C120 ECLIPSE, EMBOSS: QUARRY	9" X 36"	ACCENT	
BOD: 1100 CROSS PIECE GRILLE; FINISH:						
09 65 13.RB1	JOHNSONITE	TRADITIONAL WALL BASE	CHARCOAL	4"	FIELD	
RUBBER STAIR TREAD & RUBBER TILE						
09 65 13.RSR	NOT IN USE	NOT IN USE				
09 65 19 RT1	NOT IN USE	NOT IN USE				
RESILIENT ATHLETIC FLOORING						
09 65 66.PRA1	TARKETT SPORTS	REPLAY	RA1 MELLOWED	18"MM THICKNESS, ROLLS	WEIGHT ROOM, FIELD	
09 65 66.PRA2	TARKETT SPORTS	REPLAY	517 CLOUD	18"MM THICKNESS, ROLLS	WEIGHT ROOM, ACCENT	
09 65 66.PRA3	TARKETT SPORTS	REPLAY	507 NIGHT	18"MM THICKNESS, ROLLS	WEIGHT ROOM, ACCENT	
TERRAZZO FLOORING						
09 66 00.TZE1	TERRAZZO & MARBLE	TERROXY	TBD		LEVEL 1 MAIN CORRIDOR	STAIR TREADS
09 66 00.TZE2	TERRAZZO & MARBLE	TERROXY	TBD		ACCENT	
EPOXY FLOORING						
09 67 00.FF1	LIQUID ELEMENTS	REFLECT	TBD		LOCKER ROOMS & RESTROOMS	INTERGRAL EPOXY BASE 4" LOGO AT VARSITY LOCKER ROOMS
CARPET						
09 68 00.CP1	NOT IN USE	NOT IN USE				
09 68 00.CP2	NOT IN USE	NOT IN USE				
09 68 00.CP3	TARKETT	ASSERTIVE ACTION 04837	STEELWORK 26202	POWERBOND RS	WALK OFF CARPET	
INTERIOR WALL PANELS						
ACOUSTICAL MATERIALS						
09 84 00.ARC1	ACOUFELT	SHAPES WALLTILE, HEXAGON	COLOR: TU60 TURMERIC	LARGE 24"W X 20.78" H, THICKNESS: 1"	WEIGHT ROOM	
09 84 00.ARC2	ACOUFELT	SHAPES WALLTILE, HEXAGON	COLOR: GR02 GREY	LARGE 24"W X 20.78" H, THICKNESS: 1"	WEIGHT ROOM	
09 84 00.ARC3	ACOUFELT	SHAPES WALLTILE, HEXAGON	COLOR: CH01 CHARCOAL	LARGE 24"W X 20.78" H, THICKNESS: 1"	WEIGHT ROOM	
PAINT						
09 90 00.P1	SHERWIN WILLIAMS		SW 7014 EIDER WHITE		FIELD	
09 90 00.P2	SHERWIN WILLIAMS		SW 7066 GRAY MATTERS		ACCENT	
09 90 00.P3	SHERWIN WILLIAMS		SW 7068 GRIZZLE GRAY		ACCENT, DOOR FRAMES, GYP CEILING AT WEIGHT ROOM	
09 90 00.P4	SHERWIN WILLIAMS		BRANDING GOLD		SPIRIT COLOR	CONFIRM WITH DISTRICT
09 90 00.P5	SHERWIN WILLIAMS		SW 6991 BLACK MAGIC		SPIRIT COLOR, EXPOSED STRUCTURE	
09 90 00.P6	SHERWIN WILLIAMS		SW7014 EIDER WHITE (EPOXY FINISH)		CMU WALLS WHERE INDICATED	
09 90 00.P7	SHERWIN WILLIAMS		SW 7066 GRAY MATTERS (EPOXY FINISH)			
09 90 00.P8	SHERWIN WILLIAMS		BRANDING GOLD (EPOXY FINISH)		SPIRIT COLOR	CONFIRM WITH DISTRICT
09 90 00.P9	SHERWIN WILLIAMS		SW 6991 BLACK MAGIC (EPOXY FINISH)			
SIGNAGE						
10 14 00.RID1	FORMICA		COLOR: TBD		ROOM SIGNAGE	TOP
10 14 00.RID2	FORMICA		COLOR: TBD		ROOM SIGNAGE	BOTTOM
TOILET COMPARTMENTS/PARTITIONS						
10 21 13.19.PTC1	SCRANTON	HINDY HIDERS	STAINLESS GRIP EX		RESTROOMS	
CORNER GUARDS/WALL PROTECTION						
10 26 00.CG1	KOROSEAL	KOROGARD	COLOR TO BE SELECTED DURING SUBMITTALS		WHERE APPLICABLE	
WINDOW TREATMENT						
12 21 13.HB1	HUNTER DOUGLAS	2" FAUX WOOD BLINDS			REF TO DRAWINGS	HORIZONTAL BLINDS
12 24 00.SB1	DRAPER	SUNBLOC SERIES			REF TO DRAWINGS	WINDOW SHADE BLACKOUT FABRIC
12 24 00.SF1	DRAPER	SHEERWEAVE SERIES			REF TO DRAWINGS	WINDOW SHADE FABRIC
SOLID SURFACE						
12 36 00.SCT1	WILSONART	SOLID SURFACE COUNTERTOPS	AVALANCHE MELANGE, 9175ML		COUNTERTOPS WHERE APPLICABLE	WILL BE PROVIDED THROUGH DIRTT
12 36 00 SCT2	WILSONART	SOLID SURFACE WINDOW SILLS	FROSTY WHITE, 1573SL		WINDOW SILLS	AT ALL WINDOWS EXCEPT CLERESTORY WINDOWS
MISC.						
10 51 13.AL	METAL LOCKERS				LOCKER ROOM	METAL LOCKERS
10 12 00.DCR	CLARIDGE	370 SERIES RECESSED DISPLAY CASE				

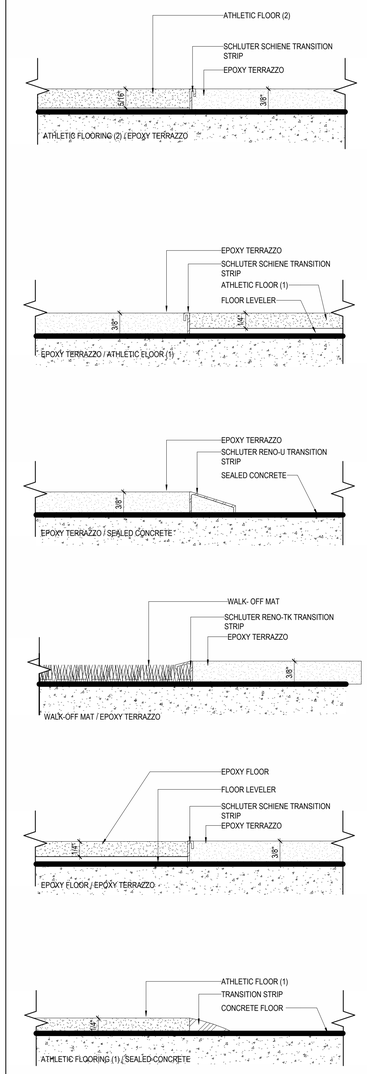

2 TYP INT FLOOR TRANSITIONS
12" = 1'-0"

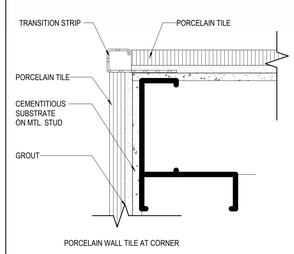

1 INT WALL TRANSITIONS
12" = 1'-0"

PBK
www.pbk.com
TX FIRM: BR 1608
HOUSTON, TX
713-965-0608

PKG 3A - GPHS NEW FIELDHOUSE

1000 Keene St,
Galena Park, TX 77547

CLIENT PROJECT NO: 240539

ISSUE FOR PROPOSAL

Galena Park ISD
GP
EXCELLENCE IN ALL FOR ALL SINCE 1912

REGISTERED ARCHITECT
JAN LEGG OTTEN
#28872
STATE OF TEXAS

6/10/2025

CLIENT	
Galena Park ISD	
DATE: June 10, 2025	PROJECT NUMBER: 240539

DRAWING HISTORY

No.	Description	Date

CHECKED BY: Checker
DRAWN BY: Author

FINISH SCHEDULE

A-900

Plot Stamp:
6/10/2025 5:35:39 PM

LEVEL 1 - OVERALL FINISH PLAN
A-901
FOR BLUEBEAM LABELING/OCR:

0"
1"

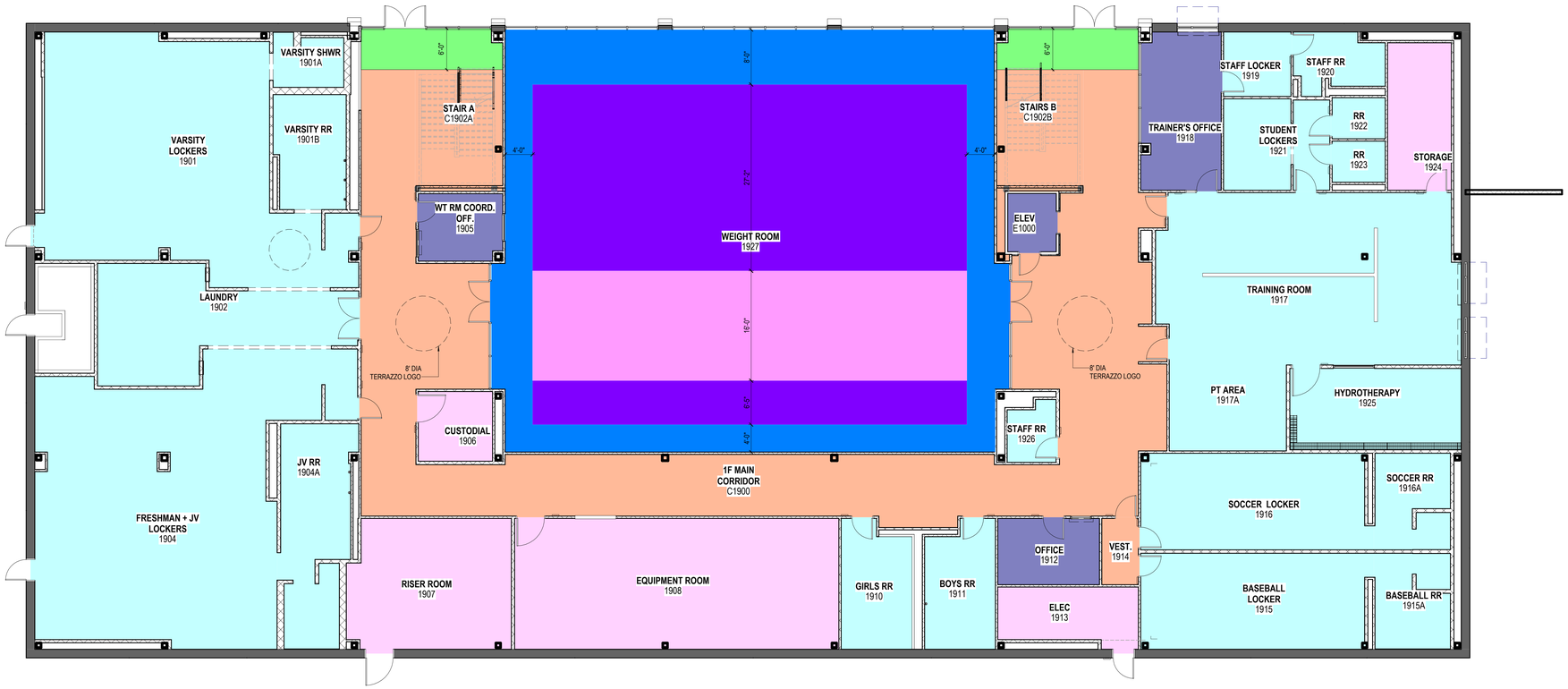

01 LEVEL 1 - OVERALL FINISH PLAN
1/8" = 1'-0"

GENERAL FLOOR FINISH NOTES

1. ALL FINISH MATERIALS SHALL MEET THE FLAME SPREAD RATINGS PER THE BUILDING CODE.
2. REFER TO INTERIOR ELEVATIONS FOR SPECIFIC MATERIAL LOCATIONS.
3. REFER TO TYPICAL FLOORING TRANSITION DETAILS FOR FLOORING MATERIAL TRANSITIONS.
4. ALL FLOORING TRANSITIONS AT DOORS SHALL BE LOCATED UNDER THE DOOR IN THE CLOSED POSITION, U.N.O.
5. CONTRACTOR WILL BE RESPONSIBLE FOR PROTECTING FINISHED FLOORING SURFACES FROM DAMAGE DURING ALL CONSTRUCTION PHASES.
6. ALL CARPET PATTERNS TO RUN PARALLEL TO CORRIDOR, U.N.O.
7. FLOOR FINISH CHANGES SHALL OCCUR AT THE CENTERLINE OF DOORS U.N.O.. FLOOR FINISH CHANGES SHALL HAVE THRESHOLDS OR REDUCER STRIPS.
8. REFER TO **AF201** FOR FLOOR TRANSITIONS AT THRESHOLD.
9. GENERAL CONTRACTOR TO SUBMIT FLOORING PATTERN LAYOUT WITH STRIPING COLORS AND STRIPING WIDTH AND NOTIFY ARCHITECT. CONTRACTOR SHALL NOT PROCEED WITH THE FLOORING INSTALLATION UNTIL LAYOUT IS APPROVED BY ARCHITECT.

KEYNOTE LEGEND

NUMBER	DESCRIPTION

FLOOR FINISH LEGEND

03 35 00.CS1 SEALED CONCRETE	**09 65 66.PRA1** RUBBER FLOORING, ROLLS
09 65 00.RFT1 VINYL TILE	**09 65 66.PRA2** RUBBER FLOORING, ROLLS
09 65 00.RFT2 VINYL TILE	**09 65 66.PRA3** RUBBER FLOORING, ROLLS
09 65 00.RFT3 VINYL TILE	**09 66 00.TZ1** TERRAZZO FLOORING
09 67 00.FFF1 EPOXY FLOORING	**09 68 00.CP3** WALK- OFF

PBK
www.pbk.com
TX FIRM: BR 1608
HOUSTON, TX
713-965-0608

PKG 3A - GPHS NEW FIELDHOUSE

1000 Keene St.
Galena Park, TX 77547

CLIENT PROJECT NO: 240539

ISSUE FOR PROPOSAL

KEY PLAN
NORTH: PLAN TRUE

REGISTERED ARCHITECT JAN LEPICOVSKY 25572 STATE OF TEXAS

6/10/2025

CLIENT	
Galena Park ISD	
DATE: June 10, 2025	PROJECT NUMBER: 240539

DRAWING HISTORY

No.	Description	Date

CHECKED BY: Checker
DRAWN BY: Author

LEVEL 1 - OVERALL FINISH PLAN

A-901

Plot Stamp:
6/10/2025 5:35:40 PM

LEVEL 2 - OVERALL FINISH PLAN
A-902
FOR BLUEBEAM LABELING/OCR:

01 LEVEL 2 - OVERALL FINISH PLAN
1/8" = 1'-0"

GENERAL FLOOR FINISH NOTES

1. ALL FINISH MATERIALS SHALL MEET THE FLAME SPREAD RATINGS PER THE BUILDING CODE.
2. REFER TO INTERIOR ELEVATIONS FOR SPECIFIC MATERIAL LOCATIONS.
3. REFER TO TYPICAL FLOORING TRANSITION DETAILS FOR FLOORING MATERIAL TRANSITIONS.
4. ALL FLOORING TRANSITIONS AT DOORS SHALL BE LOCATED UNDER THE DOOR IN THE CLOSED POSITION, U.N.O.
5. CONTRACTOR WILL BE RESPONSIBLE FOR PROTECTING FINISHED FLOORING SURFACES FROM DAMAGE DURING ALL CONSTRUCTION PHASES.
6. ALL CARPET PATTERNS TO RUN PARALLEL TO CORRIDOR, U.N.O.
7. FLOOR FINISH CHANGES SHALL OCCUR AT THE CENTERLINE OF DOORS U.N.O.. FLOOR FINISH CHANGES SHALL HAVE THRESHOLDS OR REDUCER STRIPS.
8. REFER TO AF201 FOR FLOOR TRANSITIONS AT THRESHOLD.
9. GENERAL CONTRACTOR TO SUBMIT FLOORING PATTERN LAYOUT WITH STRIPING COLORS AND STRIPING WIDTH AND NOTIFY ARCHITECT. CONTRACTOR SHALL NOT PROCEED WITH THE FLOORING INSTALLATION UNTIL LAYOUT IS APPROVED BY ARCHITECT.

KEYNOTE LEGEND

NUMBER	DESCRIPTION

FLOOR FINISH LEGEND

03 35 00.CS1 SEALED CONCRETE	09 65 66.PRA1 RUBBER FLOORING, ROLLS
09 65 00.RFT1 VINYL TILE	09 65 66.PRA2 RUBBER FLOORING, ROLLS
09 65 00.RFT2 VINYL TILE	09 65 66.PRA3 RUBBER FLOORING, ROLLS
09 65 00.RFT3 VINYL TILE	09 66 00.TZ1 TERRAZZO FLOORING
09 67 00.FF1 EPOXY FLOORING	09 68 00.CP3 WALK- OFF

PBK

www.pbk.com
TX FIRM: BR 1608
HOUSTON, TX
713-965-0608

PKG 3A - GPHS NEW FIELDHOUSE

1000 Keene St,
Galena Park, TX 77547

CLIENT PROJECT NO: 240539

ISSUE FOR PROPOSAL

KEY PLAN
NORTH: PLAN TRUE

REGISTERED ARCHITECT
JAN LEPICOVSKY
25572
STATE OF TEXAS

6/10/2025

CLIENT	
Galena Park ISD	
DATE	PROJECT NUMBER
June 10, 2025	240539

DRAWING HISTORY

No.	Description	Date

CHECKED BY: Checker
DRAWN BY: Author

LEVEL 2 - OVERALL FINISH PLAN

A-902

Plot Stamp:
6/10/2025 5:35:42 PM

WALL FINISH SCHEDULE
A-921
FOR BLUEBEAM LABELINGDOOR:

0"
1"

1. ALL ROOMS HAVE XX-X AS BASE FINISH, U.N.O.
2. ALL ROOMS HAVE XX-X AS WALL FINISH , U.N.O.

WALL FINISH SCHEDULE

ROOM DATA		BASE	WALL FINISHES				
NUMBER	NAME	FINISH	NORTH	EAST	SOUTH	WEST	COMMENTS
LEVEL 1							
1901	VARSITY LOCKERS	EPOXY	P7	P7	P7	P7	REFER TO 8/A-953 FOR TYPICAL STRIPE TREATMENT
1901A	VARSITY SHWR	EPOXY	T5, T6 & T7	T5, T6 & T7	T5, T6 & T7	T5, T6 & T7	REFER TO TYPICAL RR WALL TILE PATTERN
1901B	VARSITY RR	EPOXY	T5, T6 & T7	T5, T6 & T7	T5, T6 & T7	T5, T6 & T7	REFER TO TYPICAL RR WALL TILE PATTERN
1902	LAUNDRY	EPOXY	P7	P7	P7	P7	
1903	PUMP ROOM	EPOXY	P6	P6	P6	P6	
1904	FRESHMAN + JV LOCKERS	EPOXY	P7	P7	P7	P7	REFER TO 8/A-953 FOR TYPICAL STRIPE TREATMENT
1904A	JV RR	EPOXY	T5, T6 & T7	T5, T6 & T7	T5, T6 & T7	T5, T6 & T7	REFER TO TYPICAL RR WALL TILE PATTERN
1905	WT RM COORD. OFF.						
1906	CUSTODIAL						
1907	RISER ROOM	RB-1		P6	P6	P6	RB-1 AT CMU WALLS ONLY
1908	EQUIPMENT ROOM	RB-1			P6	P6	RB-1 AT CMU WALLS ONLY
1910	GIRLS RR				P6		EPOXY PAINT AT CMU WALLS
1911	BOYS RR				P6		EPOXY PAINT AT CMU WALLS
1912	OFFICE						
1913	ELEC				P6		
1914	VEST.						
1915	BASEBALL LOCKER			P7	P7		
1915A	BASEBALL RR	EPOXY	T5, T6 & T7	P6	T5, T6 & T7	T5, T6 & T7	REFER TO TYPICAL RR WALL TILE PATTERN
1916	SOCCER LOCKER			P7			
1916A	SOCCER RR			T5, T6 & T7	T5, T6 & T7	T5, T6 & T7	REFER TO TYPICAL RR WALL TILE PATTERN
1917	TRAINING ROOM			P6			EPOXY PAINT AT CMU WALLS
1917A	PT AREA						
1918	TRAINER'S OFFICE		P6				EPOXY PAINT AT CMU WALLS
1919	STAFF LOCKER		P7				EPOXY PAINT AT CMU WALLS
1920	STAFF RR		P7 AT CMU		T5, T6 & T7 (AT SHOWER)		REFER TO TYPICAL RR WALL TILE PATTERN
1921	STUDENT LOCKERS						
1922	RR						
1923	RR						
1924	STORAGE						
1925	HYDROTHERAPY						
1926	STAFF RR						
1927	WEIGHT ROOM		P1				
C1900	1F MAIN CORRIDOR						
C1902A	STAIR A						
C1902B	STAIRS B						
E1000	ELEV						
LEVEL 2							
-	ELEV						
1951	AD OFFICE		P1				
1952	AD RR					T5, T6 & T7 (AT SHOWER)	REFER TO TYPICAL RR WALL TILE PATTERN
1953	CONFERENCE		P1				
1954	VIDEO REVIEW						
1955	GROUP INSTRUCTION						
1956	COACHES OFFICE					P1	
1957	COACHES LOCKERS			P2	P2	P2	
1957A	COACHES RR				T5, T6 & T7 (AT SHOWER)		REFER TO TYPICAL RR WALL TILE PATTERN
1958	VIDEO ROOM						
1959	VIDEO REVIEW				P1		
1960	IDF						
1961	ELEC						
1962	STORAGE				P1		
1963	STORAGE				P1		
1964	RR						
1965	RR						
1966	STORAGE						
1967	STORAGE			P1	P1		
1968	CONDITIONING		OPERABLE PARTITION				
1969	TEAM ROOM				OPERABLE PARTITION		
1970	KITCHEN						
1971	FLEX STORAGE				P1		
C1902A	STAIR A						
C1902B	STAIRS B						
C1950	2F MAIN CORRIDOR						
C1951	2F COACHES CORRIDOR						
Grand total							

FINISH SCHEDULE NOTES AND REMARKS

GENERAL NOTES:

ALL SCHEDULED DIRECTIONS (NORTH, EAST, SOUTH, WEST) ARE PER PLAN DIRECTIONS, NOT TRUE COMPASS DIRECTIONS.

ALL FINISH MATERIALS SHALL MEET FLAME SPREAD RATINGS PER THE BUILDING CODE.

PROTECT ALL FINISHED FLOORING SURFACES FROM DAMAGE DURING ALL CONSTRUCTION PHASES.

CARPET PATTERNS SHALL RUN PARALLEL TO CORRIDOR U.N.O.

PROVIDE AND INSTALL BULLNOSE TRIM AT ALL TRANSITIONS FROM CERAMIC WALL TILE TO OTHER MATERIALS U.N.O.

PAINT ALL H.M. DOORS _____ U.N.O.

REMARKS:

1. PAINT ALL H.M. DOOR FRAMES TO MATCH ADJACENT WALL COLOR U.N.O.
2. 3/4" TREATED PLYWOOD WAINSCOT FULL HEIGHT ALL AROUND, PAINT

PBK
www.pbk.com
TX FIRM: BR 1608
HOUSTON, TX
713-965-0608

PKG 3A - GPHS NEW FIELDHOUSE
1000 Keene St.
Galena Park, TX 77547

CLIENT PROJECT NO: 240539
ISSUE FOR PROPOSAL

Galena Park ISD
GP
ACHIEVE IN ALL FOR ALL

REGISTERED ARCHITECT
JIM LEPICOVSKY
26572
STATE OF TEXAS

6/10/2025

CLIENT	
Galena Park ISD	
DATE: June 10, 2025	PROJECT NUMBER: 240539

DRAWING HISTORY

No.	Description	Date

CHECKED BY: Checker
DRAWN BY: Author

WALL FINISH SCHEDULE

A-921

Plot Stamp:
6/10/2025 5:35:42 PM

CASEWORK AND INTERIOR ELEVATIONS
A-951
FOR BLUEBEAM LABELING/OCR:

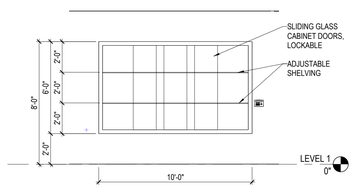

16 1900 - DISPLAY CASE - NORTH ELEVATION
1/4" = 1'-0"

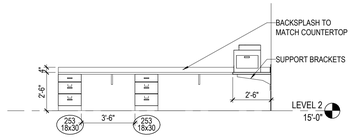

13 1956 - COACHES OFFICE - WEST ELEVATION
1/4" = 1'-0"

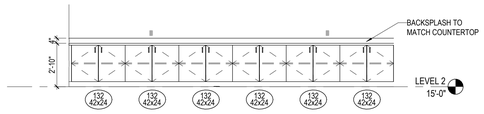

14 1955 - GROUP INSTRUCTION - EAST ELEVATION
1/4" = 1'-0"

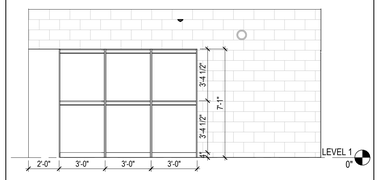

15 1908 - EQUIPMENT ROOM - WEST ELEVATION
1/4" = 1'-0"

GENERAL CASEWORK NOTES

1. BASIS-OF-DESIGN FOR ALL NON-SCIENCE CASEWORK SHALL BE _____, U.N.O.
2. BASIS-OF-DESIGN FOR ALL SCIENCE CASEWORK SHALL BE _____, U.N.O.
3. FIELD VERIFY ALL CASEWORK-RELATED DIMENSIONS PRIOR TO FABRICATION AND INSTALLATION
4. VERIFY ALL COLUMN LOCATIONS PRIOR TO FABRICATION AND INSTALLATION
5. REFER TO MEPT DOCUMENTS FOR ALL DATA OUTLETS AND DEVICES, ELECTRICAL OUTLETS AND DEVICES, AND PLUMBING FIXTURES, NOTIFY ARCHITECT OF ANY CONFLICTS PRIOR TO FABRICATION AND INSTALLATION
6. ALL CASEWORK BASE CABINETS SHALL BE 24 INCHES IN DEPTH, U.N.O.
7. ALL CASEWORK UPPER WALL CABINETS SHALL BE 14 INCHES IN DEPTH, U.N.O.
8. ALL COUNTER TOPS, VERTICAL SURFACES, NOSINGS, AND BACK SPLASHES SHALL BE PLASTIC LAMINATE FINISH, U.N.O.
9. PROVIDE AND INSTALL SIDE SPLASHES WHERE COUNTER TOP ENDS ABUT WALL SURFACES
10. PROVIDE AND INSTALL 4 INCH HIGH TOE SPACE WITH WALL BASE AT ALL CASEWORK, WALL BASE TO MATCH ROOM WALL BASE
11. PROVIDE AND INSTALL WALL ANCHORED VERTICAL SUPPORTS AT ALL KNEE SPACES GREATER THAN 48 INCHES WIDE
12. PROVIDE AND INSTALL GROMMETS WITH SLEEVES AT ALL KNEE SPACES
13. ALL CASEWORK UNITS 36 INCHES WIDE AND GREATER WITH SHELVING SHALL HAVE A CENTER FIXED SHELF
14. ALL SHELVING 36 INCHES WIDE AND GREATER SHALL BE SHALL BE 1 INCH THICK MINIMUM
15. ALL ADJUSTABLE SHELVING SHALL HAVE RECESSED STANDARDS HARDWARE
16. PROVIDE AND INSTALL FILLER PANELS WITH TOP RETURNS AT ALL SIDES, CORNERS, AND COLUMNS TO PREVENT THE CONTACT OF DOORS WITH ADJACENT SURFACES
17. PROVIDE AND INSTALL LOCKS AT ALL BASE CABINETS AND ALL UPPER WALL CABINETS

KEYNOTE LEGEND

NUMBER	DESCRIPTION
10 11 00.MBP	PORCELAIN-ENAMEL MARKERBOARD

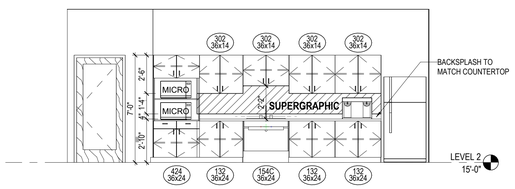

12 1953 - CONFERENCE - WEST ELEVATION
1/4" = 1'-0"

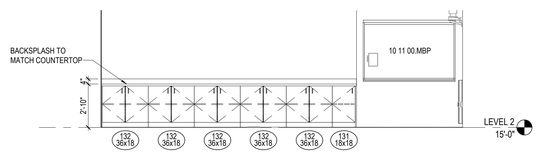

11 1953 - CONFERENCE - SOUTH ELEVATION
1/4" = 1'-0"

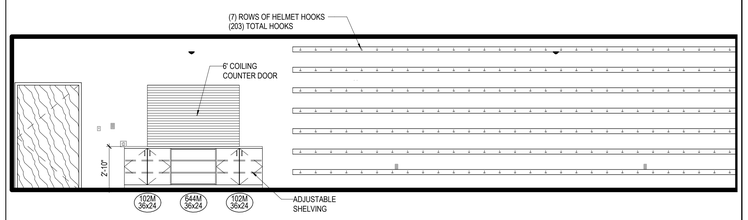

10 1908 - EQUIP. RM - SERVICE COUNTER
1/4" = 1'-0"

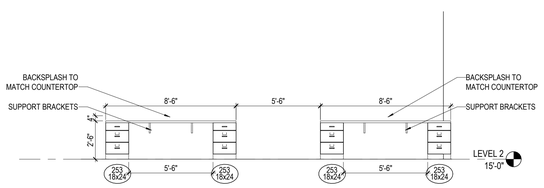

09 1956 - COACHES OFFICE - SOUTH ELEVATION
1/4" = 1'-0"

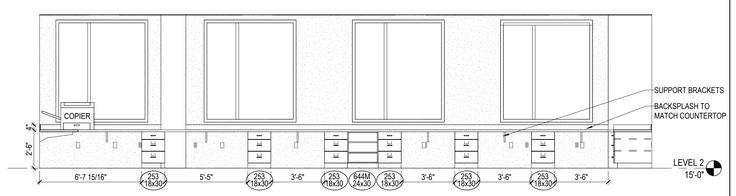

08 1956 - COACHES OFFICE -NORTH ELEVATION
1/4" = 1'-0"

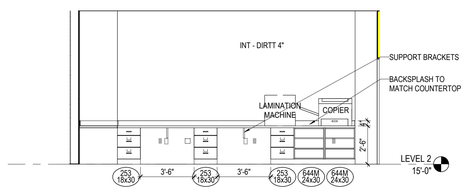

07 1956 - COACHES OFFICE - EAST ELEVATION
1/4" = 1'-0"

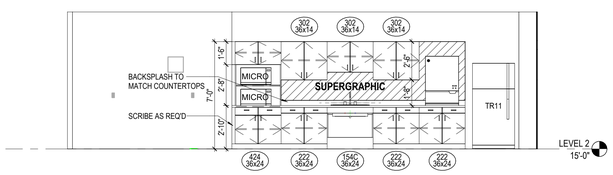

06 1970 - KITCHEN - NORTH ELEVATION
1/4" = 1'-0"

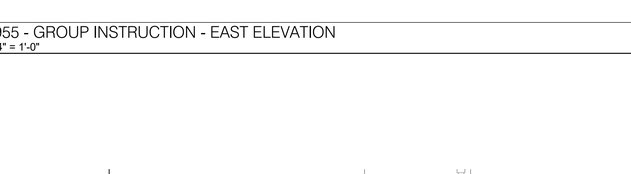

05 1970 - KITCHEN - SOUTH ELEVATION
1/4" = 1'-0"

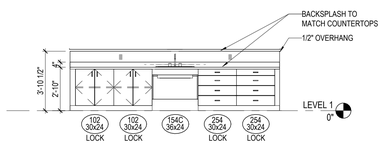

03 1917 - TRAINING ROOM - WORK COUNTER
1/4" = 1'-0"

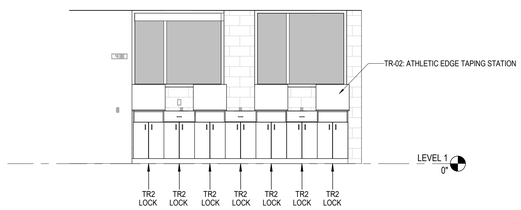

02 1917 - TRAINING RM - TAPING STATIONS
1/4" = 1'-0"

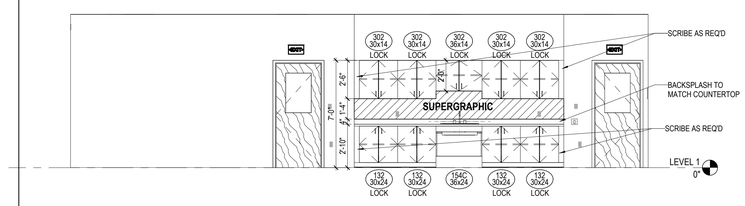

01 1917 - TRAINING ROOM - NORTH ELEVATION
1/4" = 1'-0"

PBK
www.pbk.com
TX FIRM: BR 1608
HOUSTON, TX
713-965-0608

PKG 3A - GPHS NEW FIELDHOUSE

1000 Keene St.
Galena Park, TX 77547

CLIENT PROJECT NO: 240539

ISSUE FOR PROPOSAL

Galena Park ISD

REGISTERED ARCHITECT JAN LEPICOVSKY 25572 STATE OF TEXAS

6/10/2025

CLIENT	
Galena Park ISD	
DATE: June 10, 2025	PROJECT NUMBER: 240539

DRAWING HISTORY

No.	Description	Date

CHECKED BY: Checker
DRAWN BY: JS

CASEWORK AND INTERIOR ELEVATIONS

A-951

Plot Stamp:
6/10/2025 5:35:47 PM

CASEWORK AND INTERIOR ELEVATIONS
A-952

FOR BLUEBEAM LABELING/OCR:

0"
1"

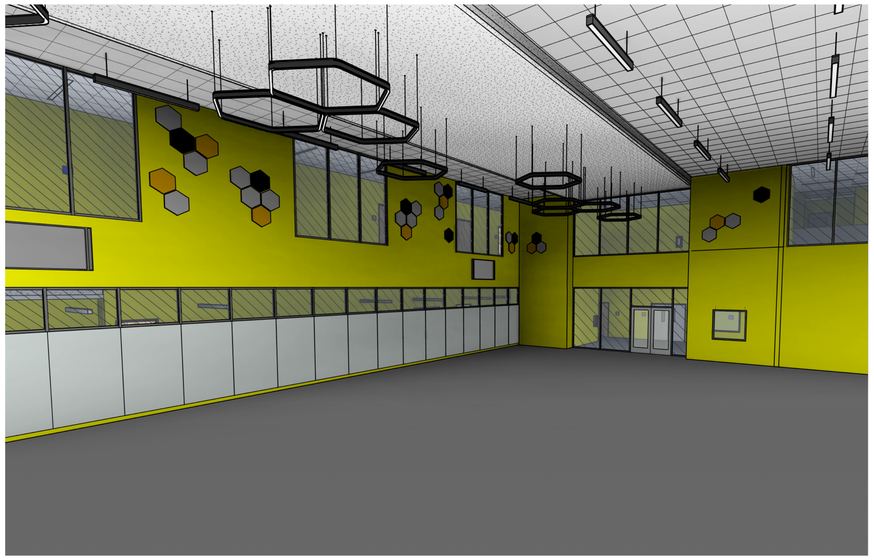

8 WEIGHT ROOM PERSPECTIVE

KEYNOTE LEGEND

NUMBER	DESCRIPTION
09 84 00.ARC1	ACOUSTIC ROOM COMPONENT TYPE 1 -
09 84 00.ARC2	ACOUSTIC ROOM COMPONENT TYPE 2 -
09 84 00.ARC3	ACOUSTIC ROOM COMPONENT TYPE 3 -
11 52 00.M70	MONITOR, 70" HD TV (OFOI)
11 52 00.M80	MONITOR, 80" HD TV (OFOI)
11 52 00.PC1	PROJECTOR, CEILING-MOUNTED (OFOI)
102813	

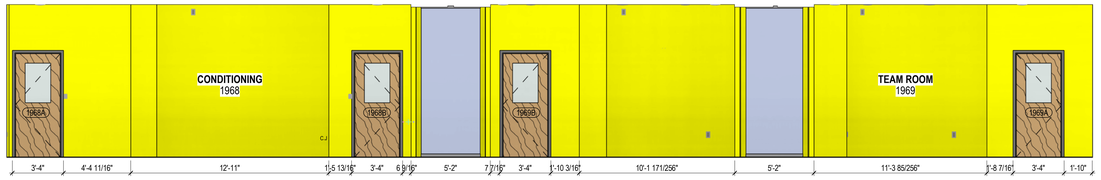

7 1968 + 1969 - TEAM ROOM W ELEV
1/4" = 1'-0"

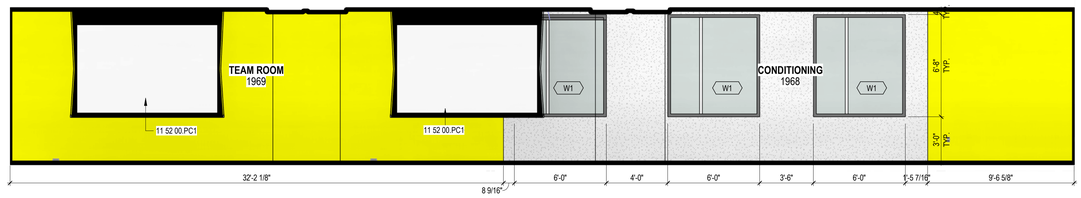

5 1969 - TEAM ROOM E ELEV
1/4" = 1'-0"

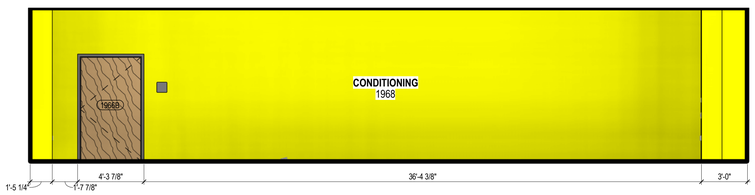

6 1968 - CONDITIONING S ELEV
1/4" = 1'-0"

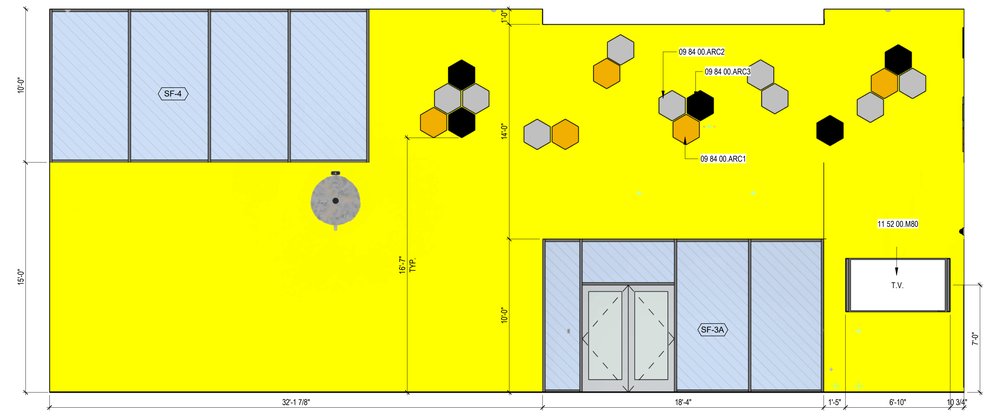

3 1927 - WEIGHT ROOM E ELEV
1/4" = 1'-0"

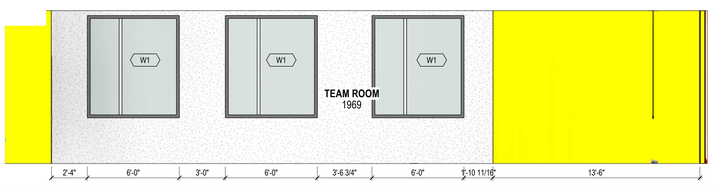

4 1969 - TEAM ROOM N ELEV
1/4" = 1'-0"

2 1927 - WEIGHT ROOM W ELEV.
1/4" = 1'-0"

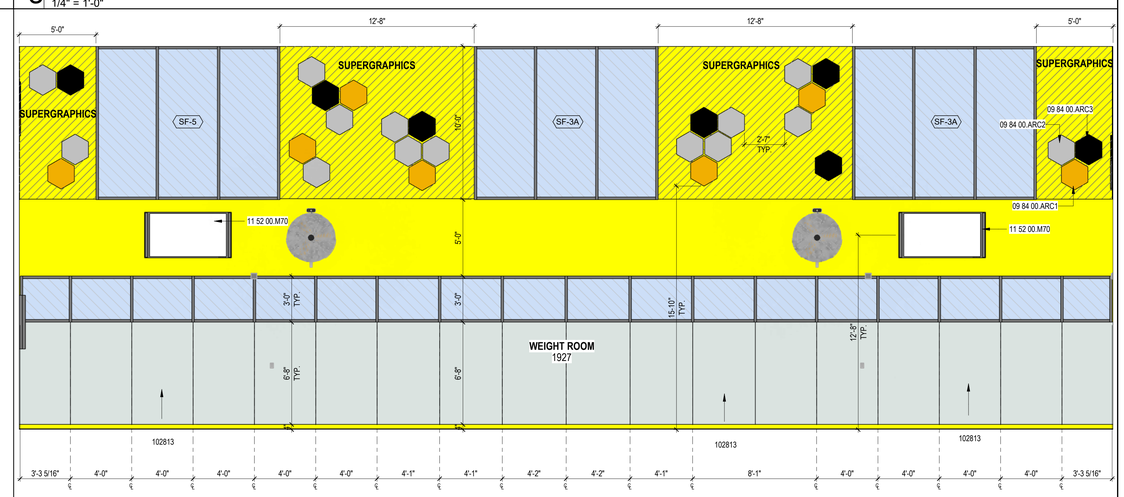

1 1927 - WEIGHT ROOM S ELEV.
1/4" = 1'-0"

PBK

www.pbk.com
TX FIRM: BR 1608
HOUSTON, TX
713-365-0608

PKG 3A - GPHS NEW FIELDHOUSE

1000 Keene St.
Galena Park, TX 77547

CLIENT PROJECT NO: 240539

ISSUE FOR PROPOSAL

Galena Park ISD

TRUE

REGISTERED ARCHITECT JOHN LEPICOVITZ 25572 STATE OF TEXAS

6/10/2025

CLIENT	
Galena Park ISD	
DATE June 10, 2025	PROJECT NUMBER 240539

DRAWING HISTORY

No.	Description	Date

CHECKED BY: T.C

DRAWN BY: S.M

CASEWORK AND INTERIOR ELEVATIONS

A-952

Plot Stamp:
6/11/2025 10:55:10 AM

CASEWORK AND INTERIOR ELEVATIONS
A-953
FOR BLUEBEAM LABELING/OCR:

0"
1"

KEYNOTE LEGEND

NUMBER	DESCRIPTION
09 90 00.P7	PAINT TYPE 7 - [ACCENT]
09 90 00.P8	PAINT TYPE 8 - [ACCENT]
09 90 00.P10	PAINT TYPE 10 - [DESCRIPTOR]

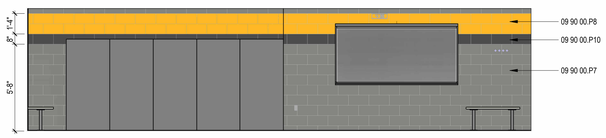

9 TYPICAL STRIPE TREATMENT AT LOCKER ROOMS
1/4" = 1'-0"

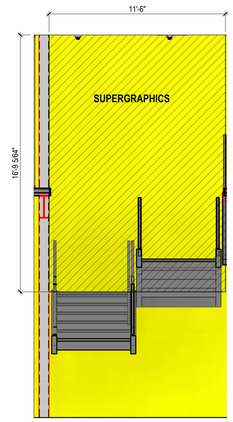

7 STAIRCASE A/B - SUPERGRAPHIC SOUTH
1/4" = 1'-0"

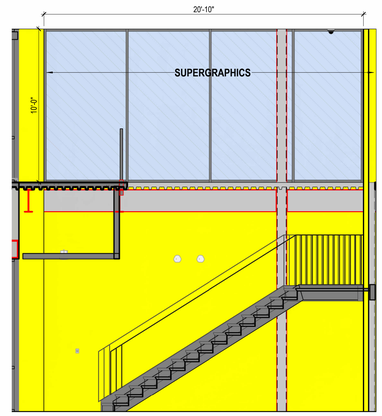

6 STAIRCASE A/B - SUPERGRAPHICS
1/4" = 1'-0"

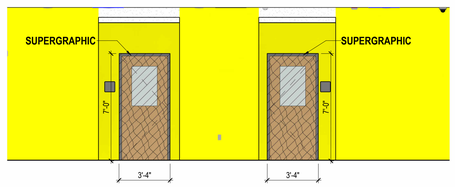

5 HALLWAY SECOND FLOOR - SUPERGRAPHIC
1/4" = 1'-0"

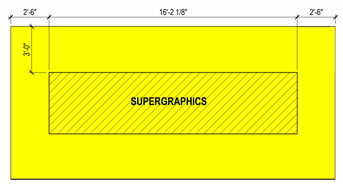

4 GROUP INSTRUCTION - SUPERGRAPHIC
1/4" = 1'-0"

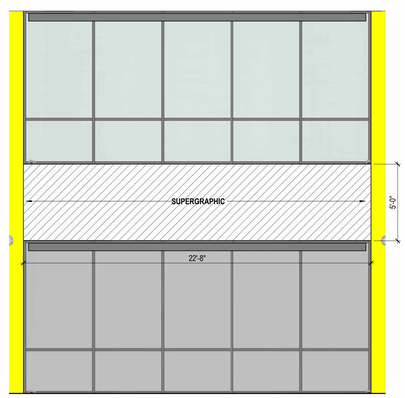

1 WEIGHT ROOM - YELLOW JACKETS SIGN SUPERGRAPHICS
1/4" = 1'-0"

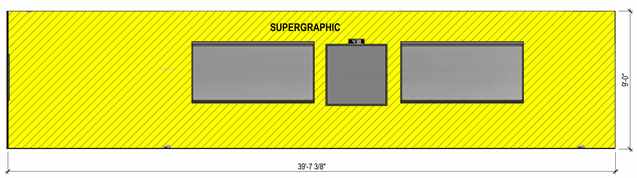

3 SOCCER/BASEBALL LOCKERS - SUPERGRAPHICS
1/4" = 1'-0"

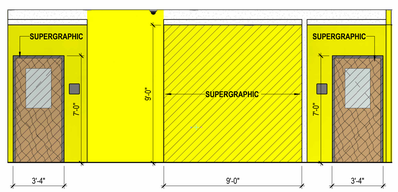

2 TRAINING ROOM HALLWAY DOORS - SUPERGRAPHICS
1/4" = 1'-0"

PBK
www.pbk.com
TX FIRM: BR 1608
HOUSTON, TX
713-965-0608

PKG 3A - GPHS NEW FIELDHOUSE

1000 Keene St.
Galena Park, TX 77547

CLIENT PROJECT NO: 240539

ISSUE FOR PROPOSAL

Galena Park ISD
GP
PLAY LIKE ALL FOR ALL

TRUE

REGISTERED ARCHITECT
JAN LEPICOVSKY
25572
STATE OF TEXAS

6/10/2025

CLIENT	
Galena Park ISD	
DATE June 10, 2025	PROJECT NUMBER 240539

DRAWING HISTORY

No.	Description	Date

CHECKED BY: T.C
DRAWN BY: S.M

CASEWORK AND INTERIOR ELEVATIONS

A-953

Plot Stamp:
6/10/2025 5:36:12 PM

LOCKER AND SHELF ELEVATIONS
A-971
FOR BLUEBEAM LABELING/OCR:

0"
1"

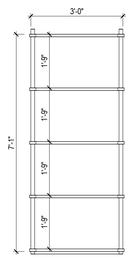

6 18"X36" METAL SHELVING
1/2" = 1'-0"

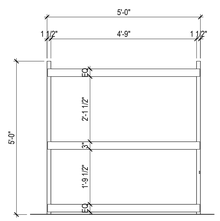

7 SHOULDER PAD STORAGE
1/2" = 1'-0"

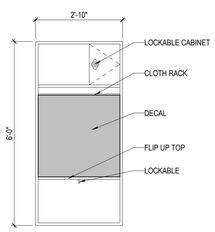

1 TYPE A VARSITY LOCKERS
1/2" = 1'-0"

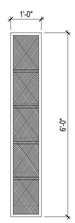

2 TYPE C 12"X15" PASS THROUGH LOCKERS
1/2" = 1'-0"

3 TYPE D 18"x18" SINGLE TIER STUDENT LOCKER
1/2" = 1'-0"

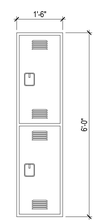

4 TYPE F 18"x18" DOUBLE TIER STUDENT LOCKER
1/2" = 1'-0"

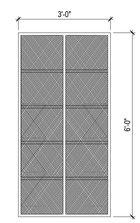

5 18"X36" LOCKABLE METAL SHELVING
1/2" = 1'-0"

PBK
HOUSTON, TX
713-965-0608
TX FIRM: BR 1608
www.pbk.com

PKG 3A - GPHS NEW FIELDHOUSE
1000 Keene St.
Galena Park, TX 77547

CLIENT PROJECT NO: 240539
ISSUE FOR PROPOSAL

Galena Park ISD

KEY PLAN
NORTH: PLAN TRUE

REGISTERED ARCHITECT JAN LEPICOVSKY 25572 STATE OF TEXAS

6/10/2025

CLIENT	
Galena Park ISD	
DATE: June 10, 2025	PROJECT NUMBER: 240539

DRAWING HISTORY

No.	Description	Date

CHECKED BY: Checker
DRAWN BY: JS

LOCKER AND SHELF ELEVATIONS

A-971

Plot Stamp:
6/10/2025 5:36:14 PM

EQUIPMENT AND LOCKER PLANS
AQ-101
FOR BLUEBEAM LABELINGOOR:

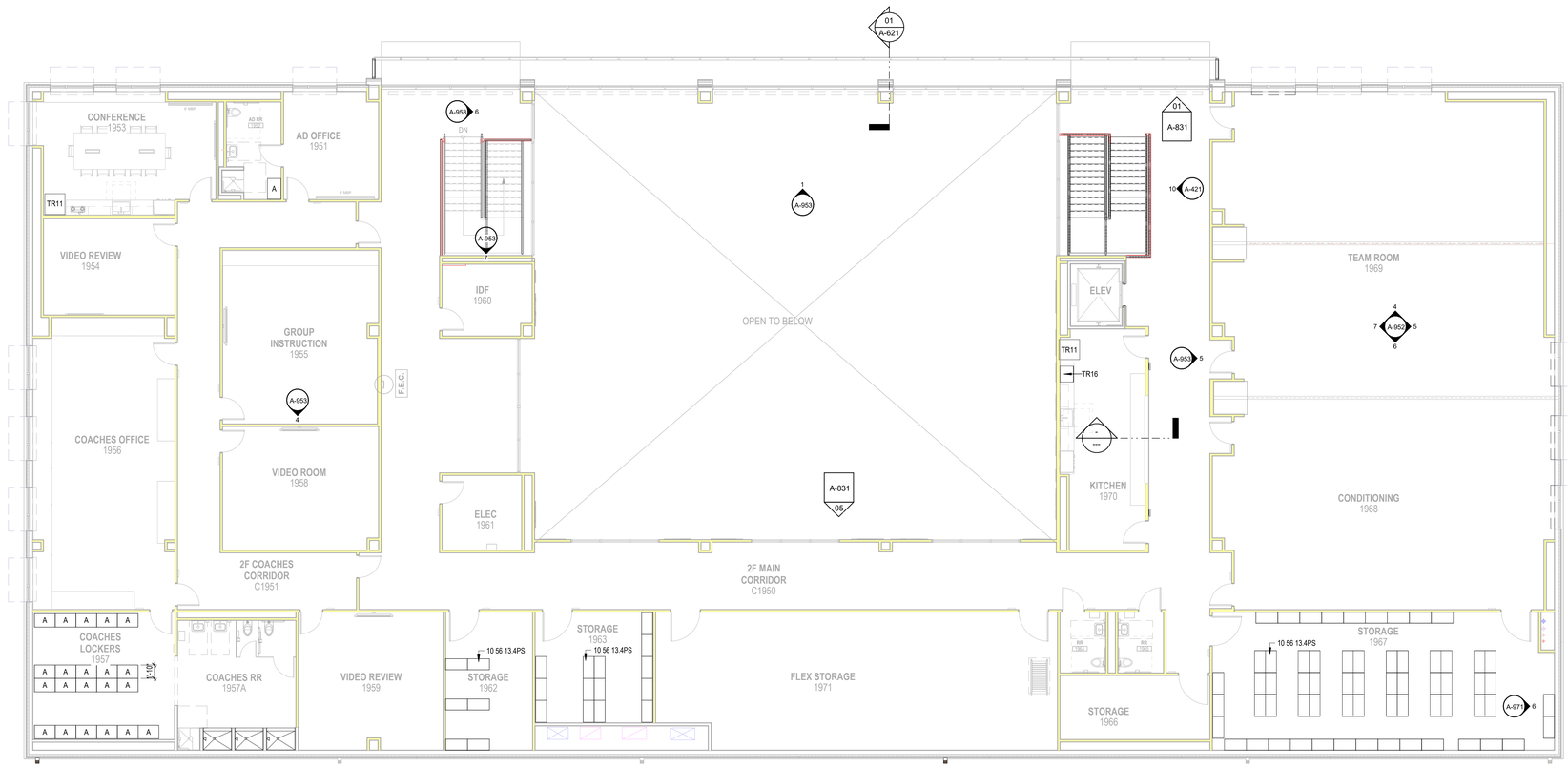

2 LEVEL 2 - EQUIPMENT FLOOR PLAN
1/8" = 1'-0"

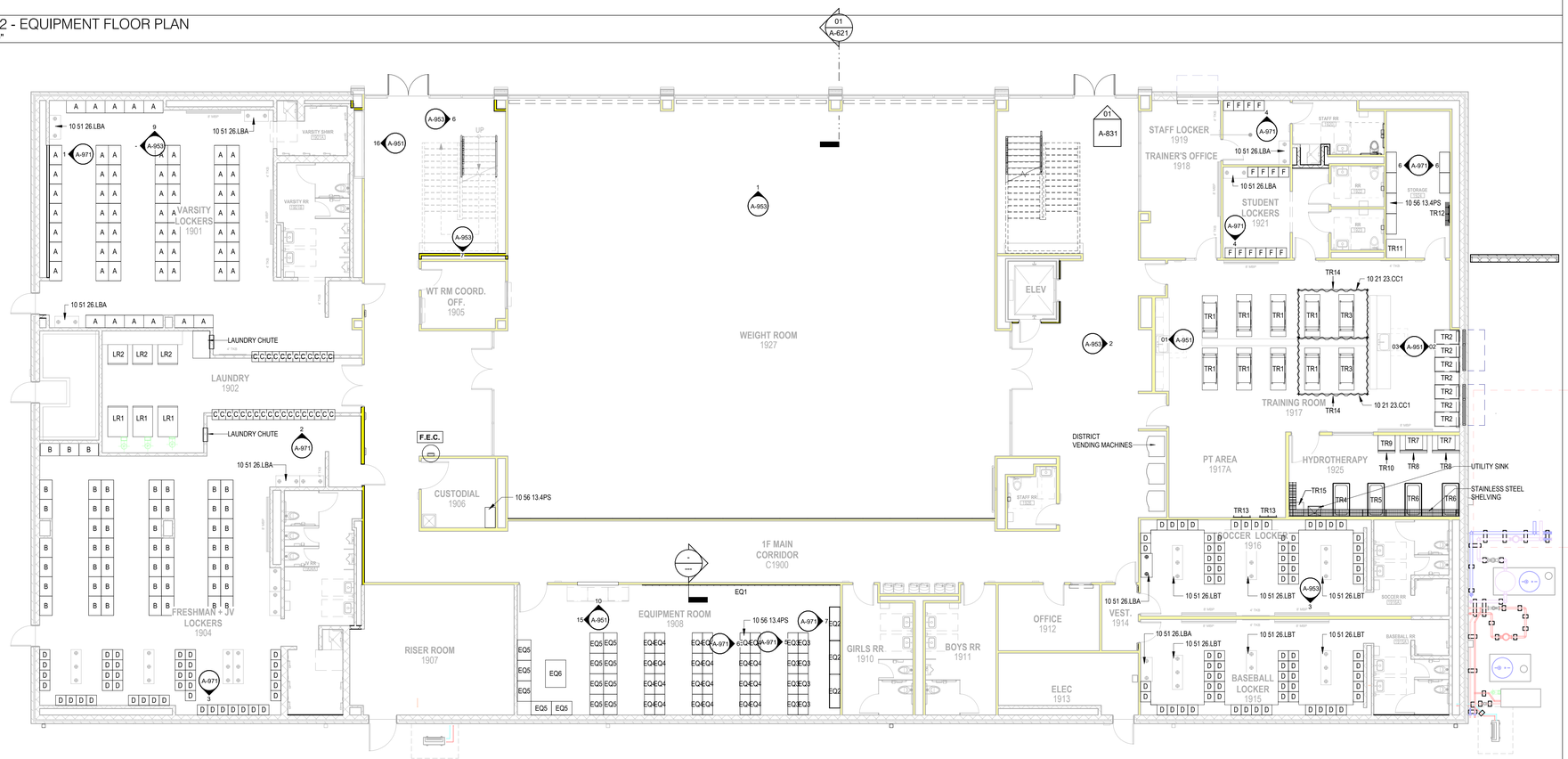

1 LEVEL 1 - EQUIPMENT FLOOR PLAN
1/8" = 1'-0"

KEYNOTE LEGEND

NUMBER	DESCRIPTION
10 21 23.CC1	CUBICLE CURTAIN, TYPE 1 - STANDARD
10 51 26.LBA	LOCKER BENCH, ACCESSIBLE, 20"D X 42"W
10 51 26.LBT	LOCKER BENCH, TYPICAL
10 56 13.4PS	FOUR POST METAL SHELVING, REF. ELEV. THIS SHEET

EQUIPMENT SCHEDULE

TYPE MARK	DESCRIPTION	MANUF	MODEL No.	Type Comments	Count
	<varies>	<varies>	<varies>	<varies>	162
	<varies>	<varies>	<varies>	OFCI	2
EQ1	Helmet Hooks	Liberty Hardware Hooks	B46114Q-SN-C5	CFCI	7
EQ2	Shoulder Pad Storage	Store More Storage	SMS-08-V42-FB-153 0-42SS	CFCI	3
EQ3	Lockable Metal Shelving	U-Line	SECURITY CART/ H-2656	CFCI	8
EQ4	Metal Shelving	U-Line	Chrome Wire Shelving/H-2940-54	CFCI	114
EQ5	Jersey Storage Cubbies	SchoolLockers	SL-1-181872-SHELF -G2026029	CFCI	13
EQ6	Portable Island	Huskey	H46X18MWC9BLK	CFCI	1
LR1	Gas Dryer - 55 lbs Capacity	HUEBSCH	HT075NMB1G1W03	CFCI	3
LR2	Front Load Washer - 40 lbs Capacity	CONTINENTAL	L105OSR21010	CFCI	3
TR1	Aluma Elite Treatment Table Custom	Athletic Edge	Item# D55194201	CFCI	8
TR2	Athletic Edge Taping Station Custom	Athletic Edge	Custom	CFCI	7
TR3	Hausmann Mammoth 3-Section Hi-Lo	Alert Services	D2497703	CFCI	2
TR4	Whitehall Whirlpool S-110 Series	Cornish Medical	Item# 070563	CFCI	1
TR5	Whitehall Whirlpool Lo-Boy(L-Series)	Cornish Medical	Item# 070554	CFCI	1
TR6	Whitehall Whirlpool Extremity E-22 Series	Cornish Medical	Item# 070517	CFCI	2
TR7	Modular Crescent Cuber - Air-Cooled	HOSHIZAKI AMERICA, INC.	KM-901MAJ	CFCI	2
TR8	Ice Storage Bin Series	HOSHIZAKI AMERICA, INC.	B-800SF	CFCI	2
TR9	Ice Machine, Cuber - Air-Cooled	HOSHIZAKI AMERICA, INC.	KML-700MAJ	CFCI	1
TR10	Ice Storage Bin Series	HOSHIZAKI AMERICA, INC.	B-500SF	CFCI	1
TR11	18cu.ft. Top Freezer Refrigerator-DOE in White	GE	Item# 1006460463	CFCI	3
TR12	SAMMONS PRESTON CRUTCH STORAGE RACK	MEDCO	ITEM# 081186501	CFCI	1
TR13	WALL-MOUNT WEIGHT RACK	MEDCO	ITEM# 81031111	CFCI	2
TR14	IFC-98 CUBICLE CURTAIN TRACK EA IMPERIAL	HENRY SCHEIN	ITEM# 1403576	CFCI	7
TR15	GE 24M TOP CONTROL PORTABLE DISHWASHER	GE	ITEM# 1004872869	CFCI	1
TR16	Sanitary Cubelet Ice Machine/Dispenser	HOSHIZAKI AMERICA, INC.	DCM-500BAH	CFCI	1

LOCKER SCHEDULE

TYPE MARK	DESCRIPTION	COUNT
A	VARSITY LOCKERS, SINGLE-TIER, 22" X 34"	82
B	(E) VARSITY LOCKERS, SALVAGED FROM DEMOLITION OF (E) FIELD HOUSE	50
C	PASS-THROUGH LOCKERS, 6-TIER, 12" X 15"	30
D	18"x18" SINGLE TIER STUDENT LOCKERS	119
F	18"x18" DOUBLE TIER LOCKERS	14

PBK

www.pbk.com
TX FIRM: BR 1608
HOUSTON, TX
713-965-0608

PKG 3A - GPHS NEW FIELDHOUSE
1000 Keene St.
Galena Park, TX 77547

CLIENT PROJECT NO: 240539
ISSUE FOR PROPOSAL

KEY PLAN
NORTH: PLAN TRUE

REGISTERED ARCHITECT JAN LEPICOVSKY 25572 STATE OF TEXAS
6/10/2025

CLIENT	
Galena Park ISD	
DATE June 10, 2025	PROJECT NUMBER 240539

DRAWING HISTORY

No.	Description	Date

CHECKED BY: TC
DRAWN BY: JS

EQUIPMENT AND LOCKER PLANS

AQ-101

Plot Stamp:
6/10/2025 5:36:18 PM

SIGNAGE GRAPHIC STANDARDS
AG051
FOR BLUEBEAM LABELING/OCR:

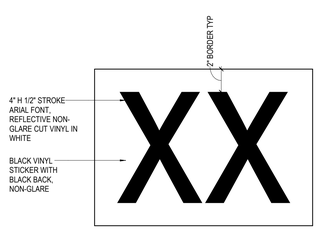

DOOR NUMBER SIGNAGE ON INTERIOR GLASS

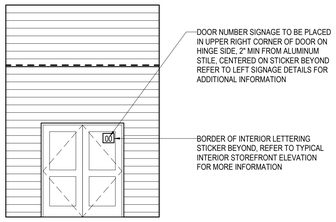

TYPICAL EXTERIOR STOREFRONT

***ALL EXTERIOR MOUNTED STICKERS TO BE EXTERIOR GRADE**

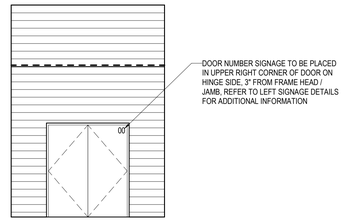

TYPICAL EXTERIOR METAL DOOR

***ALL EXTERIOR MOUNTED STICKERS TO BE EXTERIOR GRADE**

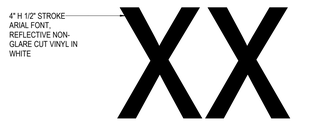

DOOR NUMBER SIGNAGE ON HOLLOW METAL OR EXTERIOR GLASS

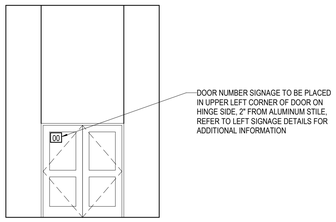

TYPICAL INTERIOR STOREFRONT

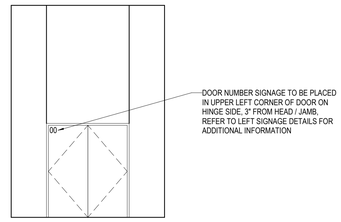

TYPICAL INTERIOR METAL DOOR

02 SIGNAGE - DOOR NUMBER GRAPHICS
6" = 1'-0"

ROOM SIGNAGE SCHEDULE - FULL

PLAN ROOM NUMBER	PLAN ROOM NAME	SIGNAGE ROOM NAME	SIGN TYPE
LEVEL 1			
1901	VARSITY LOCKERS	VARSITY LOCKER ROOM	B
1901A	VARSITY SHWR	VARSITY SHOWERS	D
1901B	VARSITY RR	VARSITY RESTROOMS	D
1902	LAUNDRY	LAUNDRY ROOM	B
1903	PUMP ROOM	PUMP ROOM	B
1904	FRESHMAN + JV LOCKERS	FRESHMAN & JV LOCKER ROOM	B
1904A	JV RR	JV RR	D
1905	WT RM COORD. OFF.	WT ROOM COORD. OFFICE	A
1906	CUSTODIAL	CUSTODIAL ROOM	B
1907	RISER ROOM	RISER ROOM	B
1908	EQUIPMENT ROOM	EQUIPMENT ROOM	B
1910	GIRLS RR	GIRLS RESTROOM	C
1911	BOYS RR	BOYS RESTROOM	D
1912	OFFICE	OFFICE	A
1913	ELEC	ELECTRICAL ROOM	B
1914	VEST.	VESTIBULE	B
1915	BASEBALL LOCKER	BASEBALL LOCKER ROOM	B
1915A	BASEBALL RR	BASEBALL RR	D
1916	SOCCER LOCKER	SOCCER LOCKER ROOM	B
1916A	SOCCER RR	SOCCER RR	D
1917	TRAINING ROOM	TRAINING ROOM	B
1917A	PT AREA		
1918	TRAINER'S OFFICE	TRAINER'S OFFICE	A
1919	STAFF LOCKER	STAFF LOCKER ROOM	B
1920	STAFF RR	STAFF RESTROOM	E
1921	STUDENT LOCKERS	STUDENT LOCKERS	B
1922	RR	RESTROOM	E
1923	RR	RESTROOM	E
1924	STORAGE	STORAGE ROOM	B
1925	HYDROTHERAPY	HYDROTHERAPY	B
1926	STAFF RR	RESTROOM	E
1927	WEIGHT ROOM	WEIGHT ROOM	B
E1000	ELEV		
LEVEL 2			
	ELEV		
1951	AD OFFICE	AD OFFICE	A
1952	AD RR	AD RESTROOM	E
1953	CONFERENCE	CONFERENCE ROOM	B
1954	VIDEO REVIEW	VIDEO REVIEW ROOM	B
1955	GROUP INSTRUCTION	GROUP INSTRUCTION	B
1956	COACHES OFFICE	COACH'S OFFICE	B
1957	COACHES LOCKERS	COACH'S LOCKER ROOM	B
1957A	COACHES RR	COACHES RR	B
1958	VIDEO ROOM	VIDEO ROOM	B
1959	VIDEO REVIEW	VIDEO REVIEW ROOM	B
1960	IDF	IDF	B
1961	ELEC	ELECTRICAL ROOM	B
1962	STORAGE	STORAGE ROOM	B
1963	STORAGE	STORAGE ROOM	B
1964	RR	RESTROOM	E
1965	RR	RESTROOM	E
1966	STORAGE	IDF	B
1967	STORAGE	STORAGE ROOM	B
1968	CONDITIONING	CONDITIONING	B
1969	TEAM ROOM	TEAM ROOM	B
1970	KITCHEN	KITCHEN	B
1971	FLEX STORAGE	FLEX STORAGE	B

GENERAL GRAPHICS NOTES

1. ALL GRAPHIC SIGNAGE SHALL BE COMPLIANT WITH ALL APPLICABLE ACCESSIBILITY REQUIREMENTS, VERIFY REQUIREMENTS AND COMPLIANCE PRIOR TO FABRICATION.
2. PROVIDE AND INSTALL ONE SIGN FOR EVERY DOOR IN DOOR SCHEDULE, PLUS ONE SIGN FOR EVERY PERMANENT ROOM AND OR SPACE WITHOUT A DOOR.
3. SIGNS SHALL BE INSTALLED ON THE WALL ADJACENT TO THE LATCH SIDE OF THE DOOR. WHERE THERE IS NO DOOR OR AT DOUBLE LEAF DOOR LOCATIONS, INSTALL SIGN ON THE NEAREST ADJACENT WALL.
4. TACTILE CHARACTERS ON SIGNS SHALL BE LOCATED 48 INCHES MINIMUM ABOVE THE FINISH FLOOR OR GROUND SURFACE AND 60 INCHES MAXIMUM ABOVE THE FINISH FLOOR OR GROUND SURFACE.
5. CHARACTER FONTS SHALL BE UPPERCASE, SANS SERIF, HELVITICA MEDIUM, NON-ITALIC, NON-OBLIQUE, NON-SCRIPT, NON-DECORATIVE, RAISED 1/32 INCH, PAINTED WHITE.
6. CHARACTER FONT PROPORTIONS SHALL BE HAVE A WIDTH OF THE UPPERCASE LETTER "O" 55 PERCENT MINIMUM AND 110 PERCENT MAXIMUM OF THE HEIGHT OF THE UPPERCASE LETTER "I".
7. CHARACTER FONT HEIGHT SHALL BE 5/8 INCH HIGH MINIMUM AND 2 INCH HIGH MAXIMUM.
8. CHARACTER FONT STROKE THICKNESS OF THE UPPER CASE LETTER "I" SHALL BE 15 PERCENT MAXIMUM OF THE HEIGHT OF THE CHARACTER.
9. CHARACTER FONT SPACING OF CHARACTERS WITH RECTANGULAR CROSS SECTIONS SHALL BE 1/8 INCH MINIMUM AND 4 TIMES THE RAISED CHARACTER STROKE WIDTH MAXIMUM.
10. CHARACTER FONT SPACING OF CHARACTERS WITH NON-RECTANGULAR CROSS SECTIONS SHALL BE 1/16 INCH MINIMUM AND 4 TIMES THE RAISED CHARACTER STROKE WIDTH MAXIMUM AT THE BASE OF THE CROSS SECTIONS, AND 1/8 INCH MINIMUM AND 4 TIMES THE RAISED CHARACTER STROKE WIDTH MAXIMUM AT THE TOP OF THE CROSS SETCIONS.
11. CHACTER FONTS SHALL BE SEPARATED FROM RAISED BORDERS AND DECORATIVE ELEMENTS 3/8 INCH MINIMUM.
12. GRADE 2 BRAILLE SHALL ACCOMPANY ALL RAISED TEXT. BRAILLE DOTS SHALL HAVE DOMED OR ROUNDED SHAPE, AND BE POSITIONED BELOW THE CORRESPONDING TEXT. IF TEXT IS MULTI-LINED, BRAILLE SHALL BE PLACED BELOW THE ENTIRE TEXT.
13. BRAILLE SHALL BE SEPARATED 3/8 INCH MINIMUM FROM RAISED BORDERS AND DECORATIVE ELEMENTS.
14. PICTOGRAMS SHALL BE ACCOMPANIED BY THE EQUIVALENT VERBAL DESCRIPTION PLACED DIRECTLY BELOW THE PICTOGRAM. THE BORDER DIMENSION OF THE PICTOGRAM SHALL BE 6 INCHES MINIMUM IN HEIGHT.
15. SIGN MATERIAL SHALL BE 1/4 INCH THICK WITH MATTE, NON-GLARE PLASTIC LAMINATE FRONT FACE AND MATTE, NON-GLARE PLASTIC LAMINATE BACK FACE. CHARACTER AND SYMBOL COLOR SHALL CONTRAST WITH BACKGROUND COLOR. COLORS SHALL BE SELECTED BY ARCHITECT AND OR OWNER.
16. SIGN EDGE SHALL BE PAINTED ALL AROUND TO MATCH SIGN FACE.
17. CONTRACTOR TO PROVIDE ONE SIGN PER DOOR OR NUMBER IN SCHEDULE WHICHEVER IS GREATER.

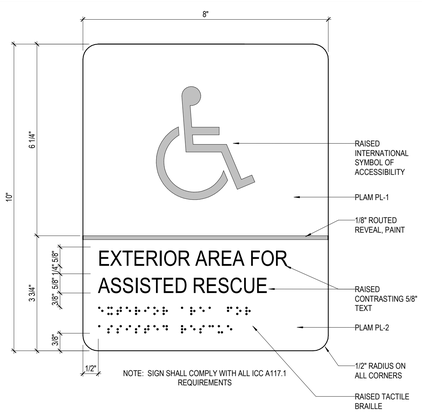

K EGRESS

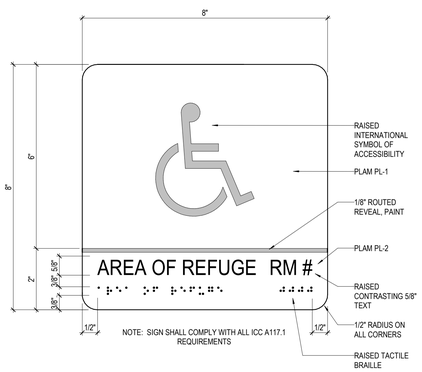

J EGRESS

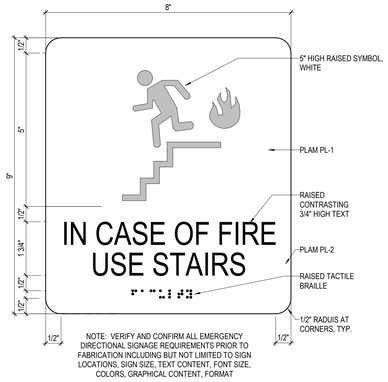

H EGRESS

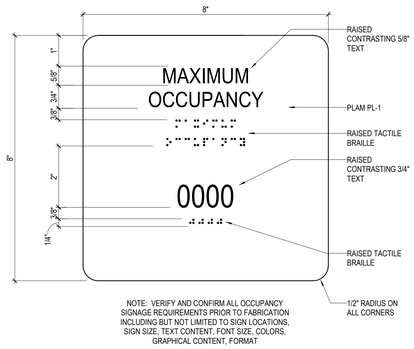

G ASSEMBLY

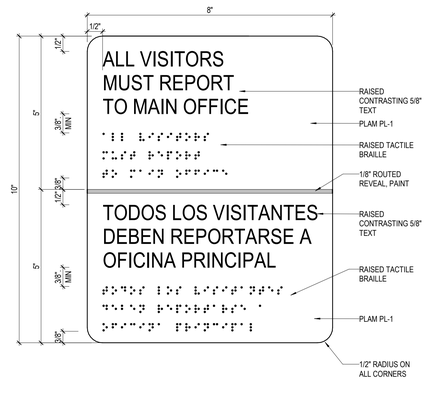

F ADMINISTRATIVE

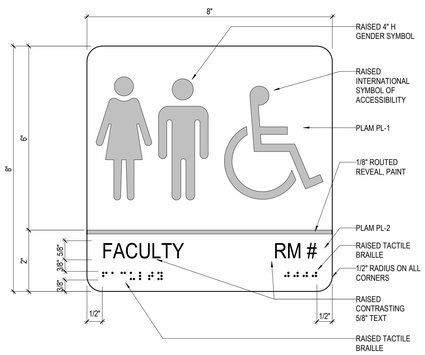

E FACULTY / ASSISTED USE / UNISEX

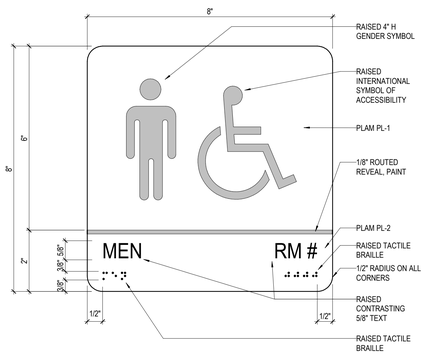

D MEN / BOYS

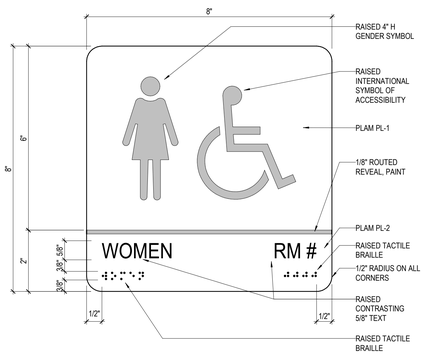

C WOMEN / GIRLS

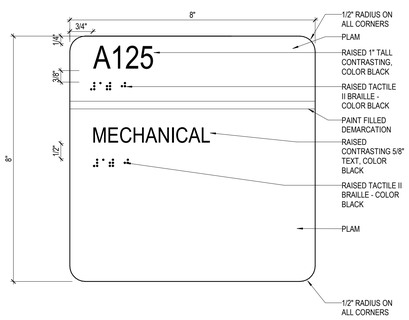

B MECHANICAL

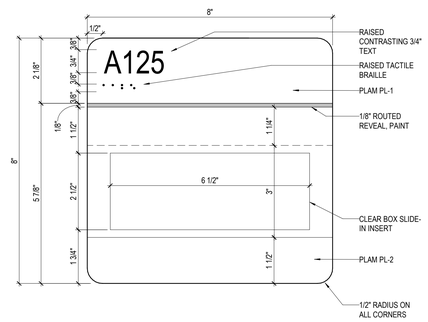

A ADMINISTRATIVE

01 SIGNAGE - GRAPHICS
6" = 1'-0"

PBK
www.pbk.com
TX FIRM: BR 1608
HOUSTON, TX
713-965-0608

PKG 3A - GPHS NEW FIELDHOUSE
1000 Keene St.
Galena Park, TX 77547

CLIENT PROJECT NO: 240539
ISSUE FOR PROPOSAL

Galena Park ISD

REGISTERED ARCHITECT JAN LEPICOVSKY 25572 STATE OF TEXAS
6/10/2025

CLIENT	
Galena Park ISD	
DATE: June 10, 2025	PROJECT NUMBER: 240539

DRAWING HISTORY

No.	Description	Date

CHECKED BY: Checker
DRAWN BY: JS

SIGNAGE GRAPHIC STANDARDS

AG051

Plot Stamp:
6/11/2025 11:35:14 AM

LEVEL 1 - OVERALL GRAPHICS & SIGNAGE PLAN
AG101
FOR BLUEBEAM LABELING/OCR:

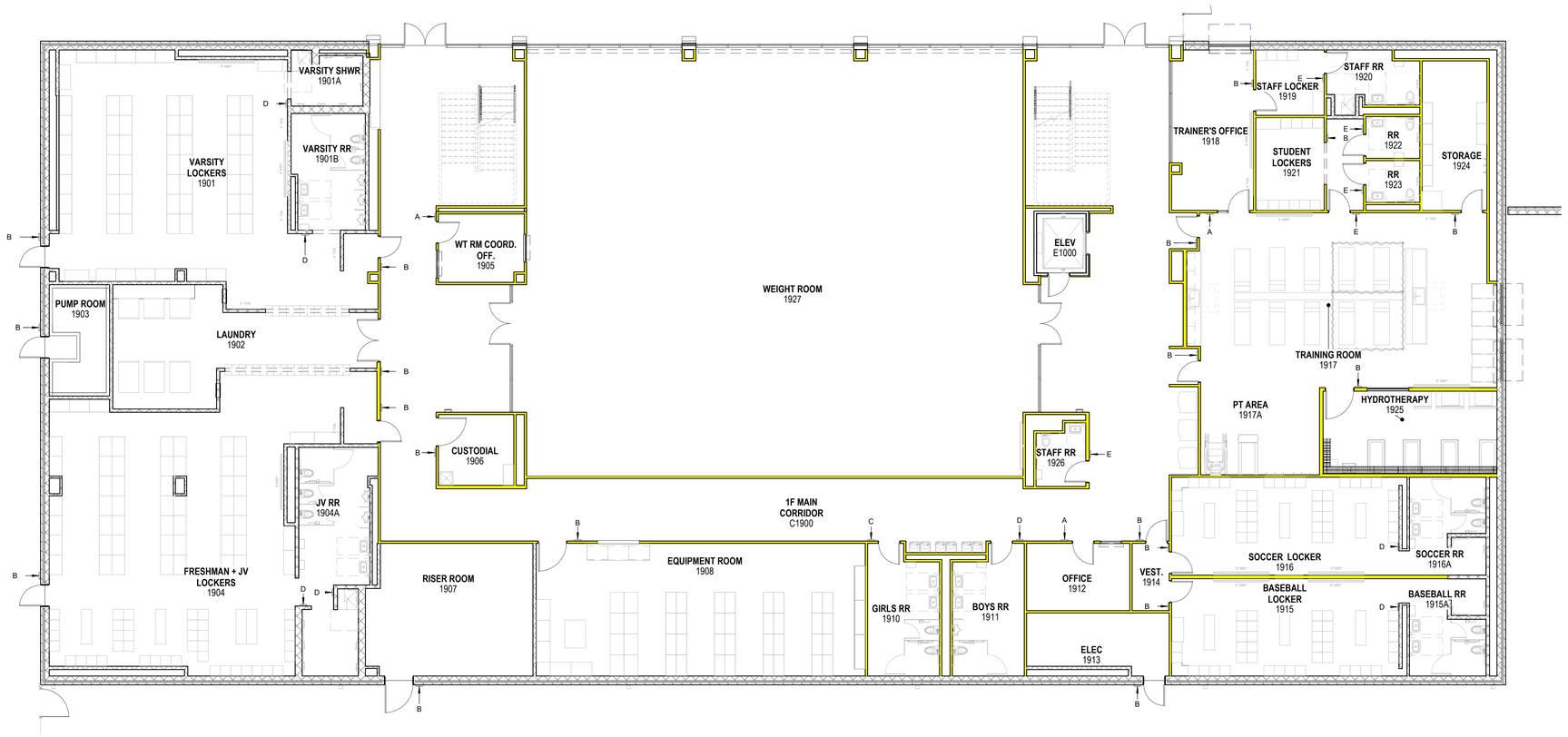

1 LEVEL 1 - OVERALL GRAPHICS & SIGNAGE PLAN
1/8" = 1'-0"

PBK
HOUSTON, TX
713-366-0608
TX FIRM: BR 1608
www.pbk.com

PKG 3A - GPHS NEW FIELDHOUSE

1000 Keene St.
Galena Park, TX 77547

CLIENT PROJECT NO: 240539

ISSUE FOR PROPOSAL

KEY PLAN
NORTH: PLAN TRUE

REGISTERED ARCHITECT JAN LEPICOVSKY 25572 STATE OF TEXAS

6/10/2025

CLIENT	
Galena Park ISD	
DATE: June 10, 2025	PROJECT NUMBER: 240539

DRAWING HISTORY

No.	Description	Date

CHECKED BY: Checker
DRAWN BY: JS

LEVEL 1 - OVERALL GRAPHICS & SIGNAGE PLAN

AG101

Plot Stamp:
6/11/2025 11:12:37 AM

LEVEL 2 - OVERALL GRAPHICS & SIGNAGE PLAN
AG102
FOR BLUEBEAM LABELING/OCR:

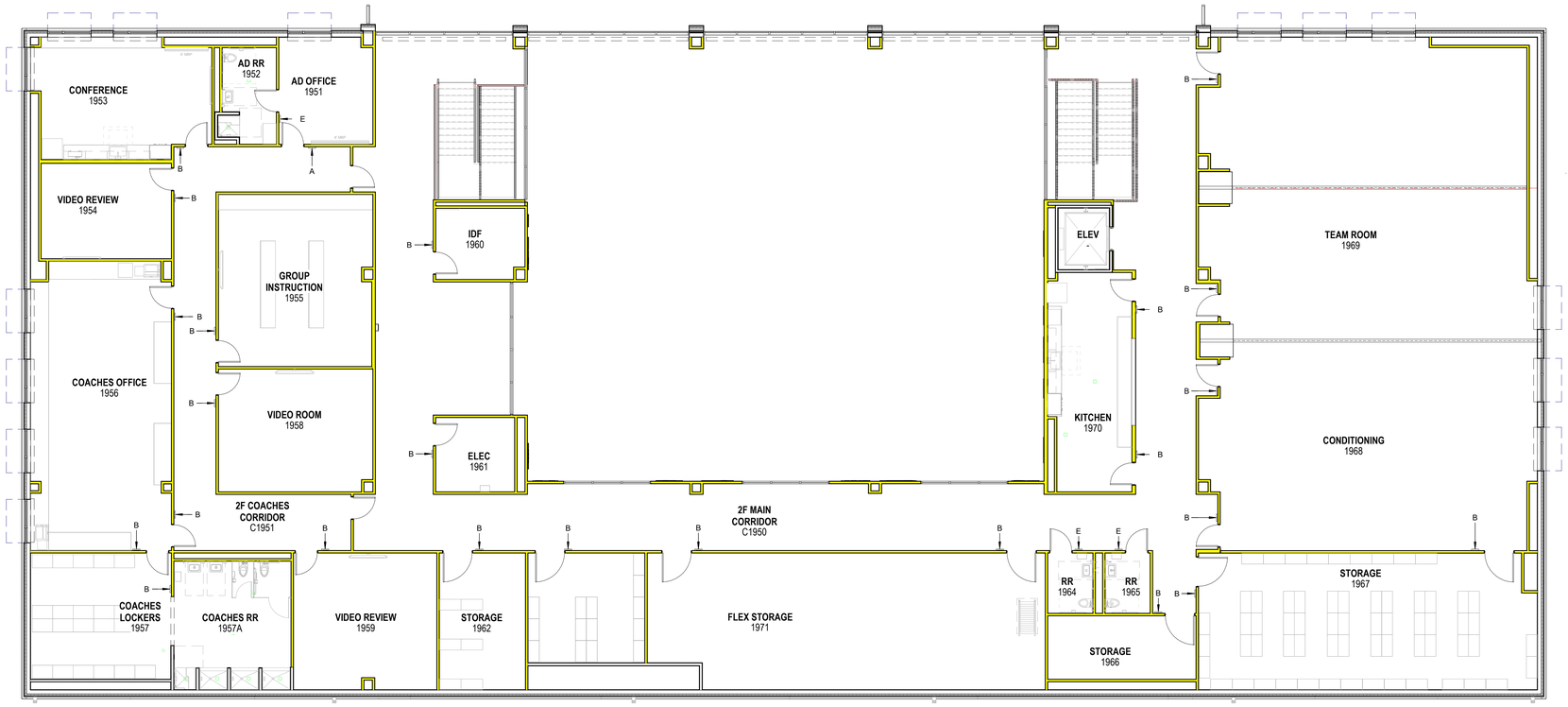

1 LEVEL 2 - OVERALL GRAPHICS & SIGNAGE PLAN
1/8" = 1'-0"

Plot Stamp:
6/11/2025 10:55:15 AM

PBK
HOUSTON, TX
713-366-0608
TX FIRM: BR 1608
www.pbk.com

PKG 3A - GPHS NEW FIELDHOUSE

1000 Keene St.
Galena Park, TX 77547

CLIENT PROJECT NO: 240539

ISSUE FOR PROPOSAL

KEY PLAN
NORTH: PLAN TRUE

REGISTERED ARCHITECT
JAN LEPICOVSKY
25572
STATE OF TEXAS

6/10/2025

CLIENT	
Galena Park ISD	
DATE: June 10, 2025	PROJECT NUMBER: 240539

DRAWING HISTORY

No.	Description	Date

CHECKED BY: Checker
DRAWN BY: JS

LEVEL 2 - OVERALL GRAPHICS & SIGNAGE PLAN

AG102

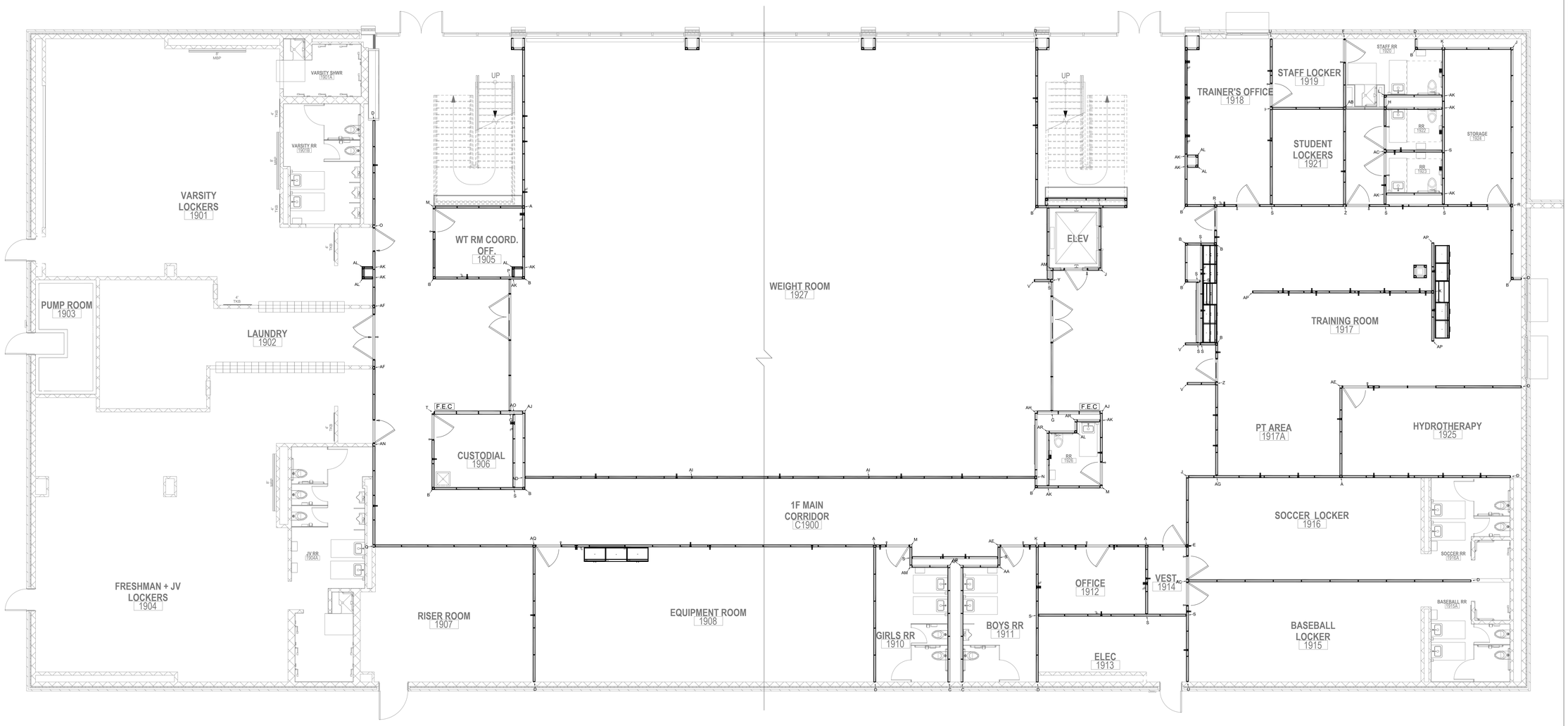

1 OVERALL FLOOR PLAN - FIRST FLOOR
DW-100.1

NOT TO SCALE

DIRTT

PROJECT DETAILS/NOTES:

FRAME AND TRIM DETAILS

EXTRUSION PROFILE / WALL TYPE:
- ☐ CURVILINEAR
- ✓ RECTILINEAR
- ☐ BLADE
- ☐ EVIL TWIN
- ☐ INSPIRE

FRAME FINISH:
- ✓ ANODIZED ALUMINUM
- ☐ POWDER-COATED
- ☐ VENEER

BASE TRIM COLOR:
- ✓ SILVER
- ☐ BLACK

PVC/GLASS WIPE COLOR:
- ✓ SILVER
- ☐ BLACK

REVEAL:
- ✓ CLASSIC
- ☐ ENZO

COPLANAR:
- ✓ NO
- ☐ YES

FLOOR, CEILING, AND SEISMIC DETAILS

FLOOR TYPE:
- ✓ CARPET
- ☐ HARD SURFACE

WALL HEIGHT: 10'-0"
LOW WALL: 4'-0"
WEIGHT ROOM 25'-0"

CEILING TYPE:
- ☐ DRYWALL BULKHEAD
- ☐ CORNICE RAIL
- ☐ LOW WALL
- ✓ GRID

GRID TYPE:
- ☐ 9/16"
- ✓ 15/16"

TILE TYPE:
- ✓ FLUSH
- ☐ CONCEALED
- ☐ TEGULAR

SEISMIC REQUIRED:
- ✓ NO
- ☐ YES

HARDWARE REQUIREMENTS:

DOORS:
REFERENCE DOOR SCHEDULE FOR FURTHER DETAILS

ELECTRICAL PROVISION REQUIRED - SEE ELECTRICAL SHOP DRAWINGS

DATA PROVISION REQUIRED - SEE PON SHOP DRAWINGS

CASEWORK PROVISIONS REQUIRED - SEE CASEWORK SHOP DRAWINGS

ADDITIONAL NOTES:

DRAWING INDEX

DW-100.1-100.3	LEVEL 1 FLOOR PLANS
DW-100.4-100.6	LEVEL 2 FLOOR PLANS
DW-100.7-100.8	HIGHLIGHTED DIRTT SCOPE
DW-200.1-200.7	LEVEL 1 ELEVATIONS
DW-200.8-200.15	LEVEL 2 ELEVATIONS
DW-300.1	LEVEL 1 INTERSECTION DETAILS LEVEL 1 DOOR SCHEDULE
DW-300.2	LEVEL 2 INTERSECTION DETAILS LEVEL 2 DOOR SCHEDULE
DW-400.1-400.2	TYPICAL DIRTT DETAILS
DW-500.1-500.4	CEILING AND FLOOR AND EFFICIENCIES

Project Name:

GALENA PARK HIGH SCHOOL
FIELD HOUSE
LEVEL 1

Project Address:

1000 KEENE ST
GALENA PARK, TX
77547

DIRTT CONSULTANT SET

-	04JUN25	95% CD	KA
1	09JUN25	95% CD (Rev 1)	KA
2	10JUN25	95% CD (Rev 2)	KA

Project:	148501
Drawn by:	KA
Scale:	AS NOTED
Plot Date:	2025/06/10
Contact:	HEATHER KENNEY
Contact Number:	346-465-4114

FLOOR PLAN - FIRST FLOOR

DW-100.1

This drawing is the confidential and proprietary information of DIRTT Environmental Solutions Ltd. (DIRTT). Any reproduction, alteration, disclosure or use of this drawing other than as agreed to by DIRTT is expressly prohibited. Do not use drawing for sale purposes. All site dimensions, drawings, details, and specifications contained herein must be verified by sub-contractors and any discrepancies must be reported to DIRTT in writing before proceeding with work. See cover page of drawing package for full disclaimer.

C:\Users\SWILLI~1\AppData\Local\Temp\ICEcad-b590f7d8-0cc1-4e45-80ff-df251e13a6cb\ICEcad.dwg 2025-6-10 12:37:00 PM

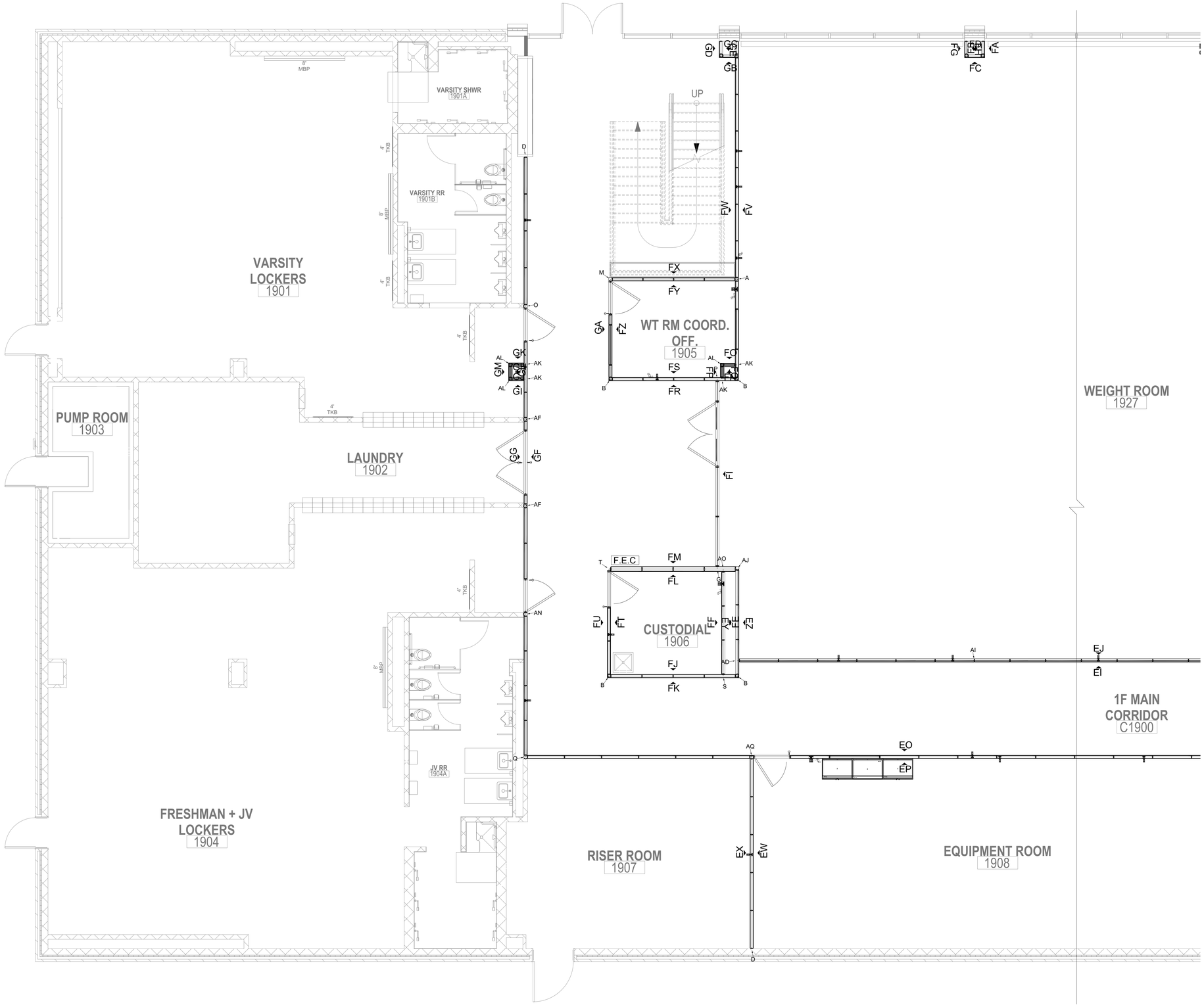

1 ENLARGED FLOOR PLAN - LEFT - FIRST FLOOR
DW-100.2

SCALE: 1/4" - 1'0"

DIRTT

PROJECT DETAILS/NOTES:

FRAME AND TRIM DETAILS

EXTRUSION PROFILE / WALL TYPE:
- ☐ CURVILINEAR
- ✓ RECTILINEAR
- ☐ BLADE
- ☐ EVIL TWIN
- ☐ INSPIRE

FRAME FINISH:
- ✓ ANODIZED ALUMINUM
- ☐ POWDER-COATED
- ☐ VENEER

BASE TRIM COLOR:
- ✓ SILVER
- ☐ BLACK

PVC/GLASS WIPE COLOR:
- ✓ SILVER
- ☐ BLACK

REVEAL:
- ✓ CLASSIC
- ☐ ENZO

COPLANAR:
- ✓ NO
- ☐ YES

FLOOR, CEILING, AND SEISMIC DETAILS

FLOOR TYPE:
- ✓ CARPET
- ☐ HARD SURFACE

WALL HEIGHT: 10'-0"
LOW WALL: 4'-0"
WEIGHT ROOM 25'-0"

CEILING TYPE:
- ☐ DRYWALL BULKHEAD
- ☐ CORNICE RAIL
- ☐ LOW WALL
- ✓ GRID

GRID TYPE:
- ☐ 9/16"
- ✓ 15/16"

TILE TYPE:
- ✓ FLUSH
- ☐ CONCEALED
- ☐ TEGULAR

SEISMIC REQUIRED:
- ✓ NO
- ☐ YES

HARDWARE REQUIREMENTS:

DOORS:
REFERENCE DOOR SCHEDULE FOR FURTHER DETAILS

ELECTRICAL PROVISION REQUIRED - SEE ELECTRICAL SHOP DRAWINGS

DATA PROVISION REQUIRED - SEE PON SHOP DRAWINGS

CASEWORK PROVISIONS REQUIRED - SEE CASEWORK SHOP DRAWINGS

ADDITIONAL NOTES:

DRAWING INDEX

DW-100.1-100.3	LEVEL 1 FLOOR PLANS
DW-100.4-100.6	LEVEL 2 FLOOR PLANS
DW-100.7-100.8	HIGHLIGHTED DIRTT SCOPE
DW-200.1-200.7	LEVEL 1 ELEVATIONS
DW-200.8-200.15	LEVEL 2 ELEVATIONS
DW-300.1	LEVEL 1 INTERSECTION DETAILS LEVEL 1 DOOR SCHEDULE
DW-300.2	LEVEL 2 INTERSECTION DETAILS LEVEL 2 DOOR SCHEDULE
DW-400.1-400.2	TYPICAL DIRTT DETAILS
DW-500.1-500.4	CEILING AND FLOOR AND EFFICIENCIES

Project Name:
GALENA PARK HIGH SCHOOL
FIELD HOUSE
LEVEL 1

Project Address:
1000 KEENE ST
GALENA PARK, TX
77547

DIRTT CONSULTANT SET

-	04JUN25	95% CD	KA
1	09JUN25	95% CD (Rev 1)	KA
2	10JUN25	95% CD (Rev 2)	KA

Project:	148501
Drawn by:	KA
Scale:	AS NOTED
Plot Date:	2025/06/10
Contact:	HEATHER KENNEY
Contact Number:	346-465-4114

FLOOR PLAN - LEFT
FIRST FLOOR

DW-100.2

This drawing is the confidential and proprietary information of DIRTT Environmental Solutions Ltd. (DIRTT). Any reproduction, alteration, disclosure or use of this drawing other than as agreed to by DIRTT is expressly prohibited. Do not use drawing for rule purposes. All site dimensions, drawings, details, and specifications contained herein must be verified by sub-contractors and any discrepancies must be reported to DIRTT in writing before proceeding with work. See cover page of drawing package for full disclaimer.

C:\Users\SWILLI~1\AppData\Local\Temp\ICEcad-b590f7d8-0cc1-4e45-80ff-df251e13a6cb\ICEcad.dwg 2025-6-10 12:37:08 PM

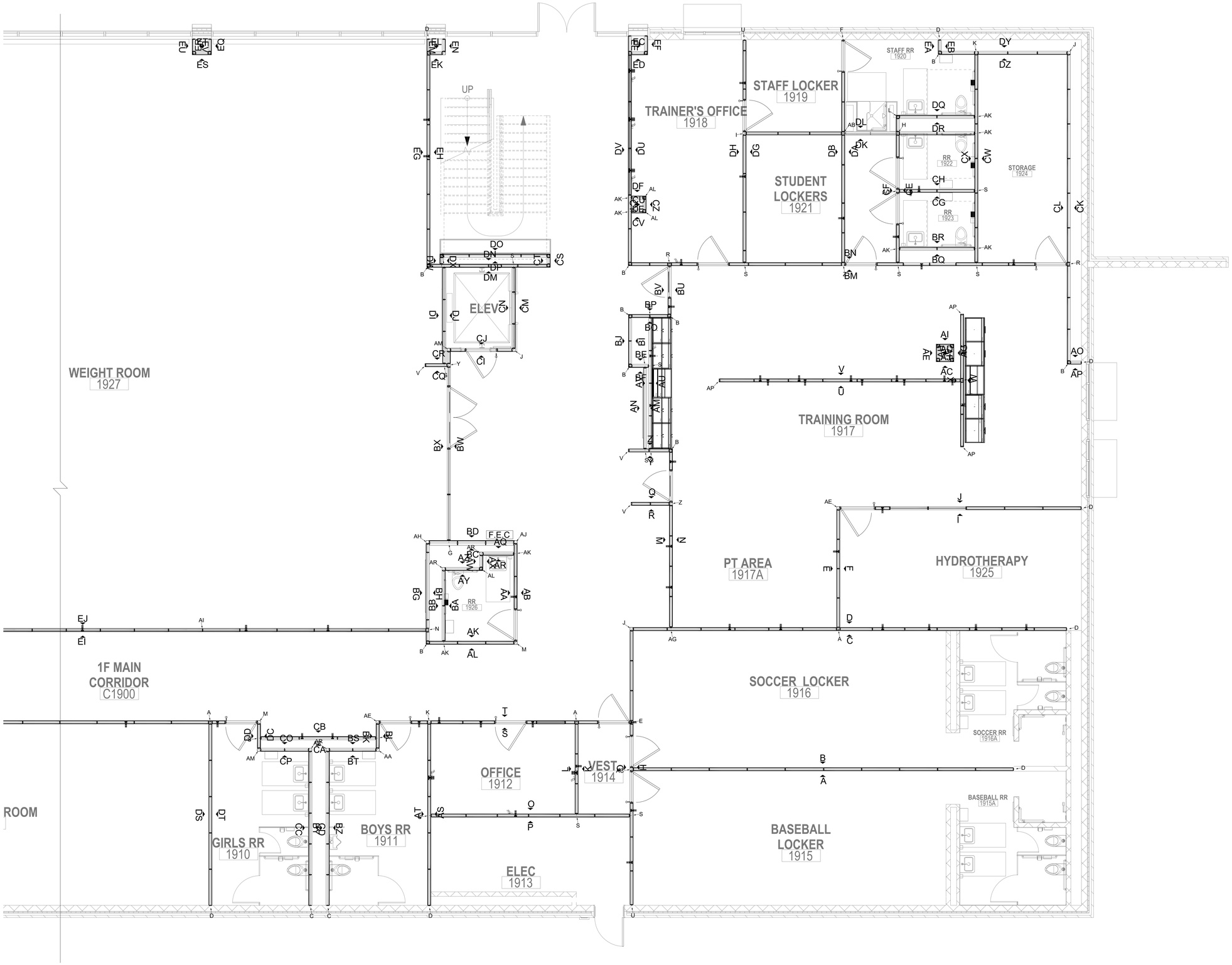

1 ENLARGED FLOOR PLAN - RIGHT - FIRST FLOOR
DW-100.3

SCALE: 1/4" - 1'0"

DIRTT

PROJECT DETAILS/NOTES:

FRAME AND TRIM DETAILS

EXTRUSION PROFILE / WALL TYPE:
- ☐ CURVILINEAR
- ☑ RECTILINEAR
- ☐ BLADE
- ☐ EVIL TWIN
- ☐ INSPIRE

FRAME FINISH:
- ☑ ANODIZED ALUMINUM
- ☐ POWDER-COATED
- ☐ VENEER

BASE TRIM COLOR:
- ☑ SILVER
- ☐ BLACK

PVC/GLASS WIPE COLOR:
- ☑ SILVER
- ☐ BLACK

REVEAL:
- ☑ CLASSIC
- ☐ ENZO

COPLANAR:
- ☑ NO
- ☐ YES

FLOOR, CEILING, AND SEISMIC DETAILS

FLOOR TYPE:
- ☑ CARPET
- ☐ HARD SURFACE

WALL HEIGHT: 10'-0"
LOW WALL: 4'-0"
WEIGHT ROOM 25'-0"

CEILING TYPE:
- ☐ DRYWALL BULKHEAD
- ☐ CORNICE RAIL
- ☐ LOW WALL
- ☑ GRID

GRID TYPE:
- ☐ 9/16"
- ☑ 15/16"

TILE TYPE:
- ☑ FLUSH
- ☐ CONCEALED
- ☐ TEGULAR

SEISMIC REQUIRED:
- ☑ NO
- ☐ YES

HARDWARE REQUIREMENTS:

DOORS:
REFERENCE DOOR SCHEDULE FOR FURTHER DETAILS

ELECTRICAL PROVISION REQUIRED - SEE ELECTRICAL SHOP DRAWINGS

DATA PROVISION REQUIRED - SEE PON SHOP DRAWINGS

CASEWORK PROVISIONS REQUIRED - SEE CASEWORK SHOP DRAWINGS

ADDITIONAL NOTES:

DRAWING INDEX

DW-100.1-100.3	LEVEL 1 FLOOR PLANS
DW-100.4-100.6	LEVEL 2 FLOOR PLANS
DW-100.7-100.8	HIGHLIGHTED DIRTT SCOPE
DW-200.1-200.7	LEVEL 1 ELEVATIONS
DW-200.8-200.15	LEVEL 2 ELEVATIONS
DW-300.1	LEVEL 1 INTERSECTION DETAILS LEVEL 1 DOOR SCHEDULE
DW-300.2	LEVEL 2 INTERSECTION DETAILS LEVEL 2 DOOR SCHEDULE
DW-400.1-400.2	TYPICAL DIRTT DETAILS
DW-500.1-500.4	CEILING AND FLOOR AND EFFICIENCIES

Project Name:
GALENA PARK HIGH SCHOOL
FIELD HOUSE
LEVEL 1

Project Address:
1000 KEENE ST
GALENA PARK, TX
77547

DIRTT
CONSULTANT
SET

-	04JUN25	95% CD	KA
1	09JUN25	95% CD (Rev 1)	KA
2	10JUN25	95% CD (Rev 2)	KA

Project:	148501
Drawn by:	KA
Scale:	AS NOTED
Plot Date:	2025/06/10
Contact:	HEATHER KENNEY
Contact Number:	346-465-4114

FLOOR PLAN - RIGHT
FIRST FLOOR

DW-100.3

This drawing is the confidential and proprietary information of DIRTT Environmental Solutions Ltd. (DIRTT). Any reproduction, alteration, disclosure or use of this drawing other than as agreed to by DIRTT is expressly prohibited. Do not use drawing for rule purposes. All site dimensions, drawings, details, and specifications contained herein must be verified by sub-contractors and any discrepancies must be reported to DIRTT in writing before proceeding with work. See cover page of drawing package for full disclaimer.

C:\Users\SWILLI~1\AppData\Local\Temp\ICEcad-b590f7d8-0cc1-4e45-80ff-df251e13a6c8\ICEcad.dwg 2025-6-10 12:37:20 PM

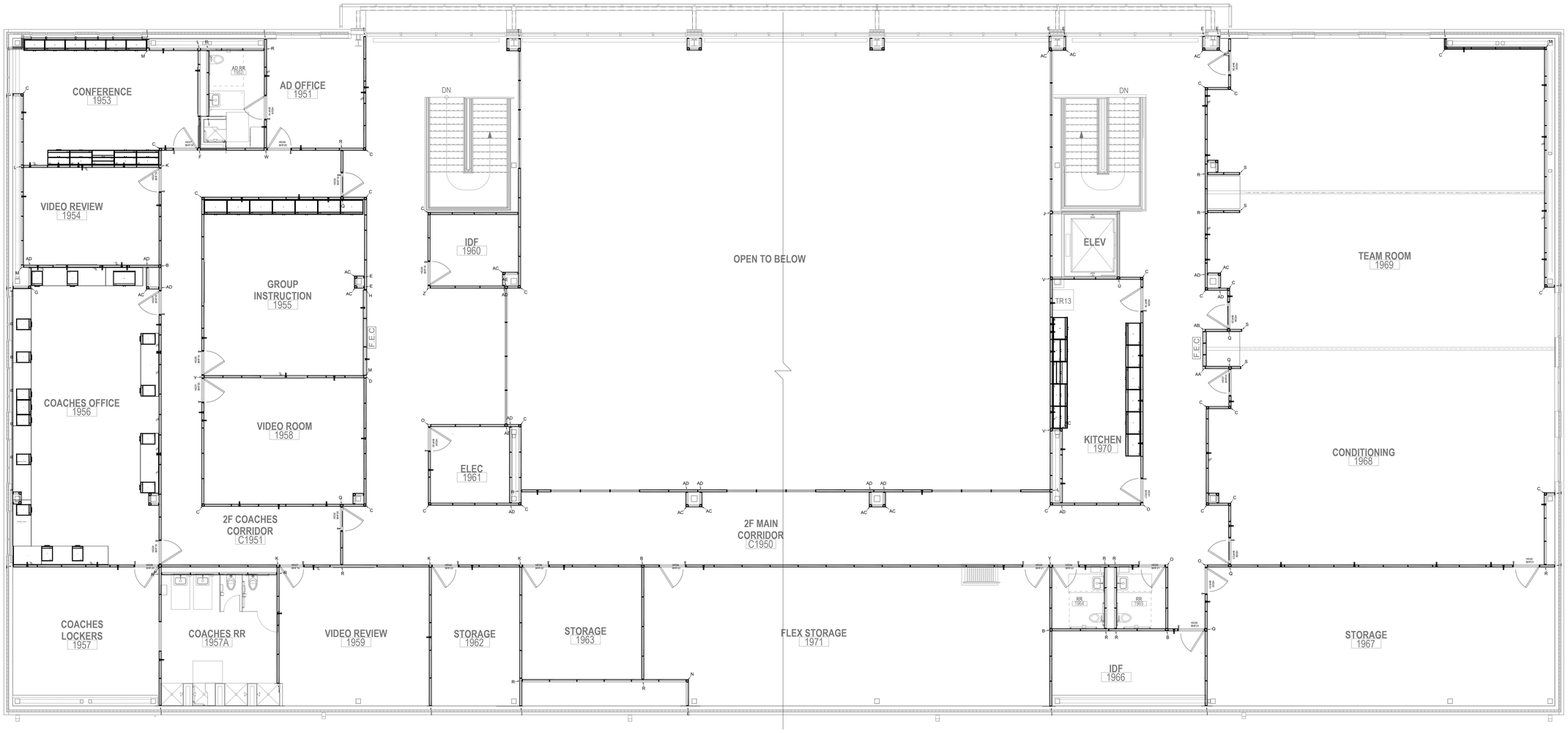

1 OVERALL FLOOR PLAN - SECOND FLOOR
DW-100.4

NOT TO SCALE

DIRTT

PROJECT DETAILS/NOTES:

FRAME AND TRIM DETAILS

EXTRUSION PROFILE / WALL TYPE:
- ☐ CURVILINEAR
- ☑ RECTILINEAR
- ☐ BLADE
- ☐ EVIL TWIN
- ☐ INSPIRE

FRAME FINISH:
- ☑ ANODIZED ALUMINUM
- ☐ POWDER-COATED
- ☐ VENEER

BASE TRIM COLOR:
- ☑ SILVER
- ☐ BLACK

PVC/GLASS WIPE COLOR:
- ☑ SILVER
- ☐ BLACK

REVEAL:
- ☑ CLASSIC
- ☐ ENZO

COPLANAR:
- ☑ NO
- ☐ YES

FLOOR, CEILING, AND SEISMIC DETAILS

FLOOR TYPE:
- ☑ CARPET
- ☐ HARD SURFACE

WALL HEIGHT: 10'-0"
WEIGHT ROOM: 25'-0"

CEILING TYPE:
- ☐ DRYWALL BULKHEAD
- ☐ CORNICE RAIL
- ☐ LOW WALL
- ☑ GRID

GRID TYPE:
- ☐ 9/16"
- ☑ 15/16"

TILE TYPE:
- ☑ FLUSH
- ☐ CONCEALED
- ☐ TEGULAR

SEISMIC REQUIRED:
- ☑ NO
- ☐ YES

HARDWARE REQUIREMENTS:

DOORS:
REFERENCE DOOR SCHEDULE FOR FURTHER DETAILS

ELECTRICAL PROVISION REQUIRED - SEE ELECTRICAL SHOP DRAWINGS

DATA PROVISION REQUIRED - SEE PON SHOP DRAWINGS

CASEWORK PROVISIONS REQUIRED - SEE CASEWORK SHOP DRAWINGS

ADDITIONAL NOTES:

DRAWING INDEX

DW-100.1-100.3	LEVEL 1 FLOOR PLANS
DW-100.4-100.6	LEVEL 2 FLOOR PLANS
DW-100.7-100.8	HIGHLIGHTED DIRTT SCOPE
DW-200.1-200.7	LEVEL 1 ELEVATIONS
DW-200.8-200.15	LEVEL 2 ELEVATIONS
DW-300.1	LEVEL 1 INTERSECTION DETAILS LEVEL 1 DOOR SCHEDULE
DW-300.2	LEVEL 2 INTERSECTION DETAILS LEVEL 2 DOOR SCHEDULE
DW-400.1-400.2	TYPICAL DIRTT DETAILS
DW-500.1-500.4	CEILING AND FLOOR EFFICIENCIES

Project Name:

GALENA PARK HIGH SCHOOL
FIELD HOUSE
LEVEL 2

Project Address:

1000 KEENE ST
GALENA PARK, TX
77547

DIRTT CONSULTANT SET

-	04JUN25	95% CDS	KA
1	09JUN25	95% CDS (Rev 1)	KA
2	10JUN25	95% CDS (Rev 2)	KA

Project:	148501
Drawn by:	KA
Scale:	AS NOTED
Plot Date:	2025/06/10
Contact:	HEATHER KENNEY
Contact Number:	346-465-4114

FLOOR PLAN
SECOND FLOOR

DW-100.4

This drawing is the confidential and proprietary information of DIRTT Environmental Solutions Ltd. (DIRTT). Any reproduction, alteration, disclosure or use of this drawing other than as agreed to by DIRTT is expressly prohibited. Do not use drawings for scale purposes. All site dimensions, drawings, details, and specifications contained herein must be verified by sub-contractors and any discrepancies must be reported to DIRTT in writing before proceeding with work. See cover page of drawing package for full disclaimer.

C:\Users\SWILLI~1\AppData\Local\Temp\ICEcad-fb9ac0e7-7db4-4050-b194-d2a248d8a0f2\ICEcad.dwg 2025-6-10 1:36:37 PM

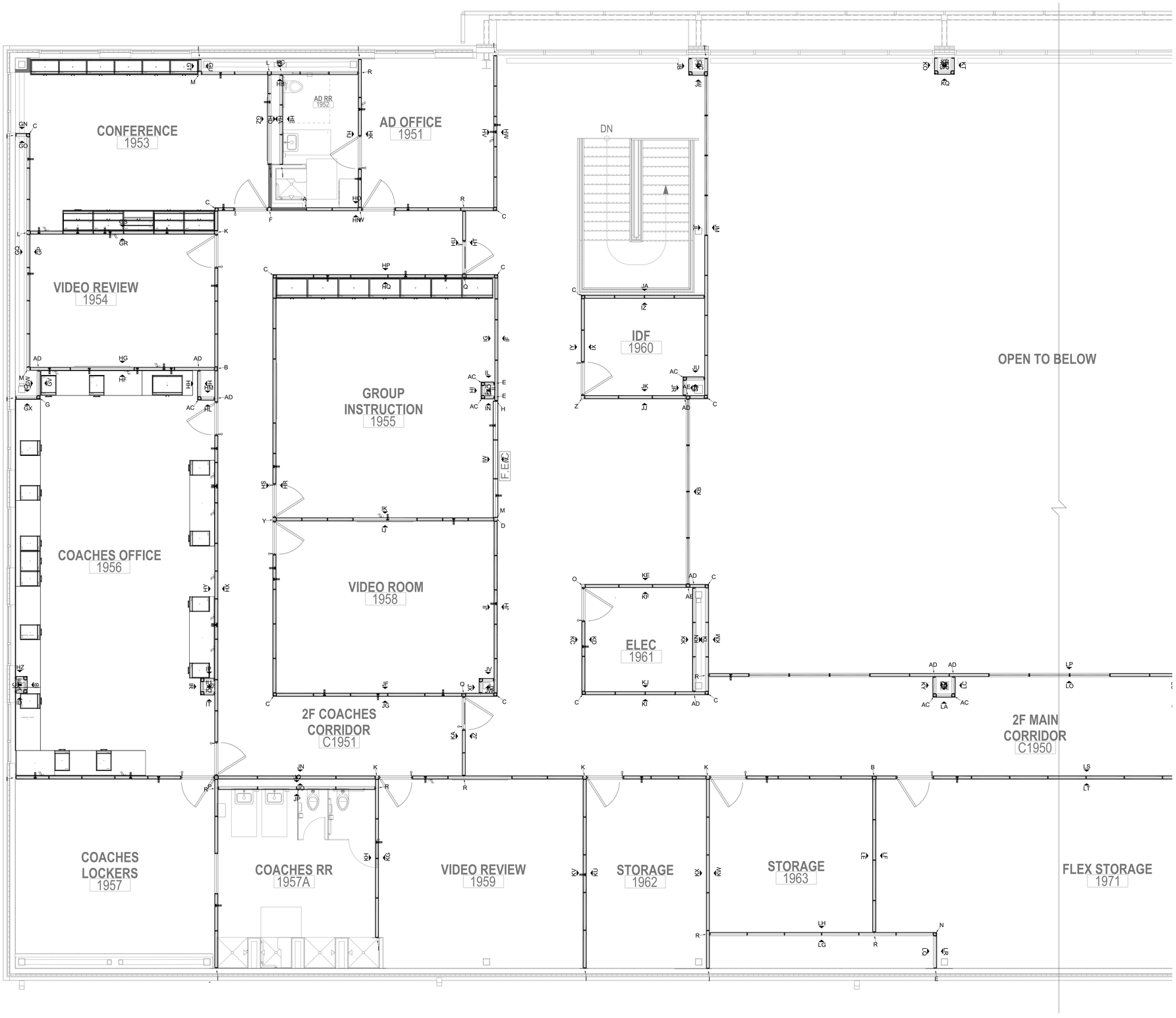

1 ENLARGED FLOOR PLAN - LEFT - SECOND FLOOR
DW-100.5

SCALE: 1/4" = 1'0"

DIRTT

PROJECT DETAILS/NOTES:

FRAME AND TRIM DETAILS

EXTRUSION PROFILE / WALL TYPE:
- ☐ CURVILINEAR
- ☑ RECTILINEAR
- ☐ BLADE
- ☐ EVIL TWIN
- ☐ INSPIRE

FRAME FINISH:
- ☑ ANODIZED ALUMINUM
- ☐ POWDER-COATED
- ☐ VENEER

BASE TRIM COLOR:
- ☑ SILVER
- ☐ BLACK

PVC/GLASS WIPE COLOR:
- ☑ SILVER
- ☐ BLACK

REVEAL:
- ☑ CLASSIC
- ☐ ENZO

COPLANAR:
- ☑ NO
- ☐ YES

FLOOR, CEILING, AND SEISMIC DETAILS

FLOOR TYPE:
- ☑ CARPET
- ☐ HARD SURFACE

WALL HEIGHT: 10'-0"
WEIGHT ROOM: 25'-0"

CEILING TYPE:
- ☐ DRYWALL BULKHEAD
- ☐ CORNICE RAIL
- ☐ LOW WALL
- ☑ GRID

GRID TYPE:
- ☐ 9/16"
- ☑ 15/16"

TILE TYPE:
- ☑ FLUSH
- ☐ CONCEALED
- ☐ TEGULAR

SEISMIC REQUIRED:
- ☑ NO
- ☐ YES

HARDWARE REQUIREMENTS:

DOORS:
REFERENCE DOOR SCHEDULE FOR FURTHER DETAILS

ELECTRICAL PROVISION REQUIRED - SEE ELECTRICAL SHOP DRAWINGS

DATA PROVISION REQUIRED - SEE PON SHOP DRAWINGS

CASEWORK PROVISIONS REQUIRED - SEE CASEWORK SHOP DRAWINGS

ADDITIONAL NOTES:

DRAWING INDEX

DW-100.1-100.3	LEVEL 1 FLOOR PLANS
DW-100.4-100.6	LEVEL 2 FLOOR PLANS
DW-100.7-100.8	HIGHLIGHTED DIRTT SCOPE
DW-200.1-200.7	LEVEL 1 ELEVATIONS
DW-200.8-200.15	LEVEL 2 ELEVATIONS
DW-300.1	LEVEL 1 INTERSECTION DETAILS LEVEL 1 DOOR SCHEDULE
DW-300.2	LEVEL 2 INTERSECTION DETAILS LEVEL 2 DOOR SCHEDULE
DW-400.1-400.2	TYPICAL DIRTT DETAILS
DW-500.1-500.4	CEILING AND FLOOR EFFICIENCIES

Project Name:
GALENA PARK HIGH SCHOOL
FIELD HOUSE
LEVEL 2

Project Address:
1000 KEENE ST
GALENA PARK, TX
77547

DIRTT
CONSULTANT
SET

-	04JUN25	95% CDS	KA
1	09JUN25	95% CDS (Rev 1)	KA
2	10JUN25	95% CDS (Rev 2)	KA

Project:	148501
Drawn by:	KA
Scale:	AS NOTED
Plot Date:	2025/06/10
Contact:	HEATHER KENNEY
Contact Number:	346-465-4114

FLOOR PLAN -LEFT
SECOND FLOOR

DW-100.5

This drawing is the confidential and proprietary information of DIRTT Environmental Solutions Ltd. (DIRTT). Any reproduction, alteration, disclosure or use of this drawing other than as agreed to by DIRTT is expressly prohibited. Do not use drawings for sale purposes. All site dimensions, drawings, details, and specifications contained herein must be verified by sub-contractors and any discrepancies must be reported to DIRTT in writing before proceeding with work. See cover page of drawing package for full disclaimer.

C:\Users\SWILLI~1\AppData\Local\Temp\ICEcad-fb9ac0e7-7db4-4050-b194-d2a248d8a0f2\ICEcad.dwg 2025-6-10 1:36:50 PM

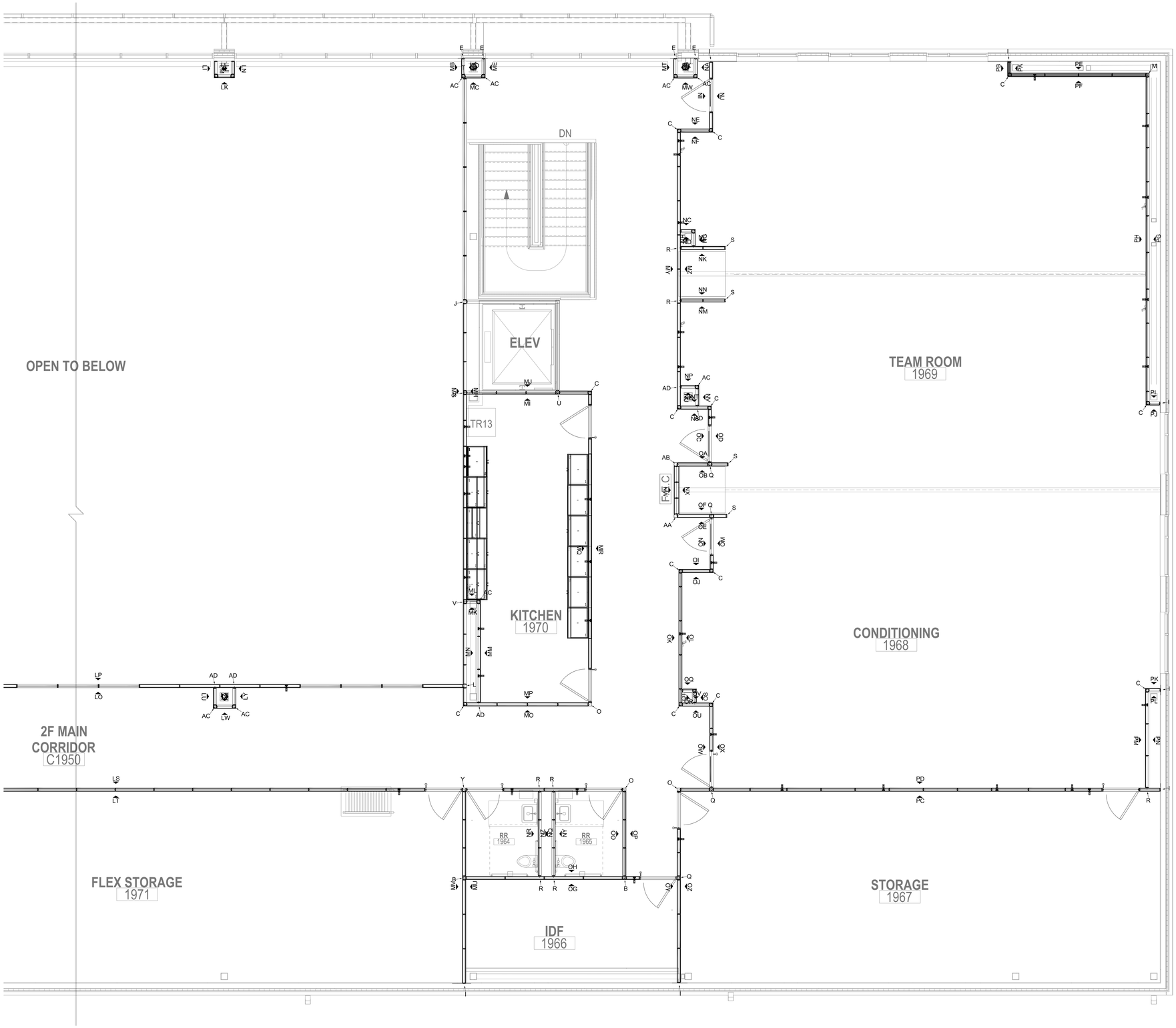

1 ENLARGED FLOOR PLAN - RIGHT- SECOND FLOOR
DW-100.6

SCALE: 1/4" = 1'0"

DIRTT

PROJECT DETAILS/NOTES:

FRAME AND TRIM DETAILS

EXTRUSION PROFILE / WALL TYPE:
- ☐ CURVILINEAR
- ✓ RECTILINEAR
- ☐ BLADE
- ☐ EVIL TWIN
- ☐ INSPIRE

FRAME FINISH:
- ✓ ANODIZED ALUMINUM
- ☐ POWDER-COATED
- ☐ VENEER

BASE TRIM COLOR:
- ✓ SILVER
- ☐ BLACK

PVC/GLASS WIPE COLOR:
- ✓ SILVER
- ☐ BLACK

REVEAL:
- ✓ CLASSIC
- ☐ ENZO

COPLANAR:
- ✓ NO
- ☐ YES

FLOOR, CEILING, AND SEISMIC DETAILS

FLOOR TYPE:
- ✓ CARPET
- ☐ HARD SURFACE

WALL HEIGHT: 10'-0"
WEIGHT ROOM: 25'-0"

CEILING TYPE:
- ☐ DRYWALL BULKHEAD
- ☐ CORNICE RAIL
- ☐ LOW WALL
- ✓ GRID

GRID TYPE:
- ☐ 9/16"
- ✓ 15/16"

TILE TYPE:
- ✓ FLUSH
- ☐ CONCEALED
- ☐ TEGULAR

SEISMIC REQUIRED:
- ✓ NO
- ☐ YES

HARDWARE REQUIREMENTS:

DOORS:
REFERENCE DOOR SCHEDULE FOR FURTHER DETAILS

ELECTRICAL PROVISION REQUIRED - SEE ELECTRICAL SHOP DRAWINGS

DATA PROVISION REQUIRED - SEE PON SHOP DRAWINGS

CASEWORK PROVISIONS REQUIRED - SEE CASEWORK SHOP DRAWINGS

ADDITIONAL NOTES:

DRAWING INDEX

DW-100.1-100.3	LEVEL 1 FLOOR PLANS
DW-100.4-100.6	LEVEL 2 FLOOR PLANS
DW-100.7-100.8	HIGHLIGHTED DIRTT SCOPE
DW-200.1-200.7	LEVEL 1 ELEVATIONS
DW-200.8-200.15	LEVEL 2 ELEVATIONS
DW-300.1	LEVEL 1 INTERSECTION DETAILS LEVEL 1 DOOR SCHEDULE
DW-300.2	LEVEL 2 INTERSECTION DETAILS LEVEL 2 DOOR SCHEDULE
DW-400.1-400.2	TYPICAL DIRTT DETAILS
DW-500.1-500.4	CEILING AND FLOOR EFFICIENCIES

Project Name:

GALENA PARK HIGH SCHOOL
FIELD HOUSE
LEVEL 2

Project Address:

1000 KEENE ST
GALENA PARK, TX
77547

DIRTT
CONSULTANT
SET

-	04JUN25	95% CDS	KA
1	09JUN25	95% CDS (Rev 1)	KA
2	10JUN25	95% CDS (Rev 2)	KA

Project:	148501
Drawn by:	KA
Scale:	AS NOTED
Plot Date:	2025/06/10
Contact:	HEATHER KENNEY
Contact Number:	346-465-4114

FLOOR PLAN -RIGHT
SECOND FLOOR

DW-100.6

This drawing is the confidential and proprietary information of DIRTT Environmental Solutions Ltd. (DIRTT). Any reproduction, alteration, disclosure or use of this drawing other than as agreed to by DIRTT is expressly prohibited. Do not use drawing for safe purposes. All site dimensions, drawings, details, and specifications contained herein must be verified by sub-contractors and any discrepancies must be reported to DIRTT in writing before proceeding with work. See cover page of drawing package for full disclaimer.

This drawing is the confidential and proprietary information of DIRTT Environmental Solutions Ltd. (DIRTT). Any reproduction, alteration, disclosure or use of this drawing other than as agreed to by DIRTT is expressly prohibited. Do not use drawings for scale purposes. All site dimensions, drawings, details, and specifications contained herein must be verified by job contractors and any discrepancies must be reported to DIRTT in writing before proceeding with work. See cover page of drawing package for full disclaimer.

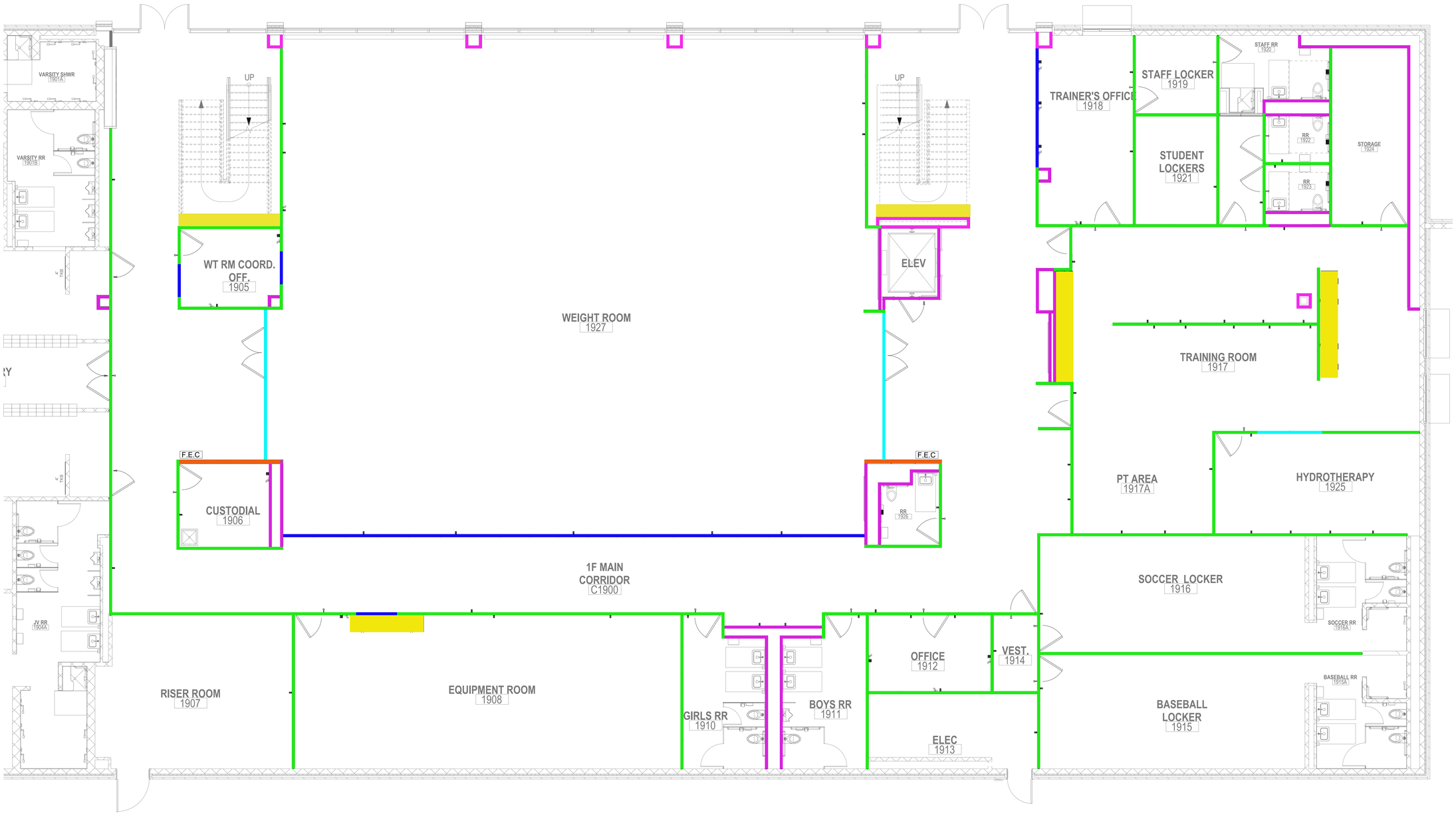

1 FLOOR PLAN
DW-100.7

NOT TO SCALE

COLOR LEGEND

- 4" GLASS WALL
- 4" SOLID WALL
- 4" SOLID + GLASS WALL
- 4" FURRING WALL
- 6" SOLID WALL
- DIRTT CASEWORK

DIRTT™

PROJECT DETAILS/NOTES:

FRAME AND TRIM DETAILS

EXTRUSION PROFILE / WALL TYPE:
- ☐ CURVILINEAR
- ✓ RECTILINEAR
- ☐ BLADE
- ☐ EVIL TWIN
- ☐ INSPIRE

FRAME FINISH:
- ✓ ANODIZED ALUMINUM
- ☐ POWDER-COATED
- ☐ VENEER

BASE TRIM COLOR:
- ✓ SILVER
- ☐ BLACK

PVC/GLASS WIPE COLOR:
- ✓ SILVER
- ☐ BLACK

REVEAL:
- ✓ CLASSIC
- ☐ ENZO

COPLANAR:
- ✓ NO
- ☐ YES

FLOOR, CEILING, AND SEISMIC DETAILS

FLOOR TYPE:
- ✓ CARPET
- ☐ HARD SURFACE

WALL HEIGHT: 10'-0"
LOW WALL: 4'-0"
WEIGHT ROOM 25'-0"

CEILING TYPE:
- ☐ DRYWALL BULKHEAD
- ☐ CORNICE RAIL
- ☐ LOW WALL
- ✓ GRID

GRID TYPE:
- ☐ 9/16"
- ✓ 15/16"

TILE TYPE:
- ✓ FLUSH
- ☐ CONCEALED
- ☐ TEGULAR

SEISMIC REQUIRED:
- ✓ NO
- ☐ YES

HARDWARE REQUIREMENTS:

DOORS:
REFERENCE DOOR SCHEDULE FOR FURTHER DETAILS

ELECTRICAL PROVISION REQUIRED - SEE ELECTRICAL SHOP DRAWINGS

DATA PROVISION REQUIRED - SEE PON SHOP DRAWINGS

CASEWORK PROVISIONS REQUIRED - SEE CASEWORK SHOP DRAWINGS

ADDITIONAL NOTES:

DRAWING INDEX

DW-100.1-100.3	LEVEL 1 FLOOR PLANS
DW-100.4-100.6	LEVEL 2 FLOOR PLANS
DW-100.7-100.8	HIGHLIGHTED DIRTT SCOPE
DW-200.1-200.7	LEVEL 1 ELEVATIONS
DW-200.8-200.15	LEVEL 2 ELEVATIONS
DW-300.1	LEVEL 1 INTERSECTION DETAILS LEVEL 1 DOOR SCHEDULE
DW-300.2	LEVEL 2 INTERSECTION DETAILS LEVEL 2 DOOR SCHEDULE
DW-400.1-400.2	TYPICAL DIRTT DETAILS
DW-500.1-500.4	CEILING AND FLOOR AND EFFICIENCIES

Project Name:
GALENA PARK HIGH SCHOOL
FIELD HOUSE
LEVEL 1

Project Address:
1000 KEENE ST
GALENA PARK, TX
77547

DIRTT CONSULTANT SET

-	04JUN25	95% CD	KA
1	09JUN25	95% CD (Rev 1)	KA
2	10JUN25	95% CD (Rev 2)	KA

Project:	148501
Drawn by:	KA
Scale:	AS NOTED
Plot Date:	2025/06/10
Contact:	HEATHER KENNEY
Contact Number:	346-465-4114

HIGHLIGHTED PLAN
FIRST FLOOR

DW-100.7

This drawing is the confidential and proprietary information of DIRTT Environmental Solutions Ltd. (DIRTT). Any reproduction, alteration, disclosure or use of this drawing other than as agreed to by DIRTT is expressly prohibited. Do not use drawing for cutting purposes. All site dimensions, drawings, details, and specifications contained herein must be verified by sub-contractors and any discrepancies must be reported to DIRTT in writing before proceeding with work. See cover page of drawing package for full disclaimer.

COLOR LEGEND

- 4" GLASS WALL
- 4" SOLID WALL
- 4" SOLID + GLASS WALL
- 4" FURRING WALL
- 6" SOLID WALL
- DIRTT CASEWORK

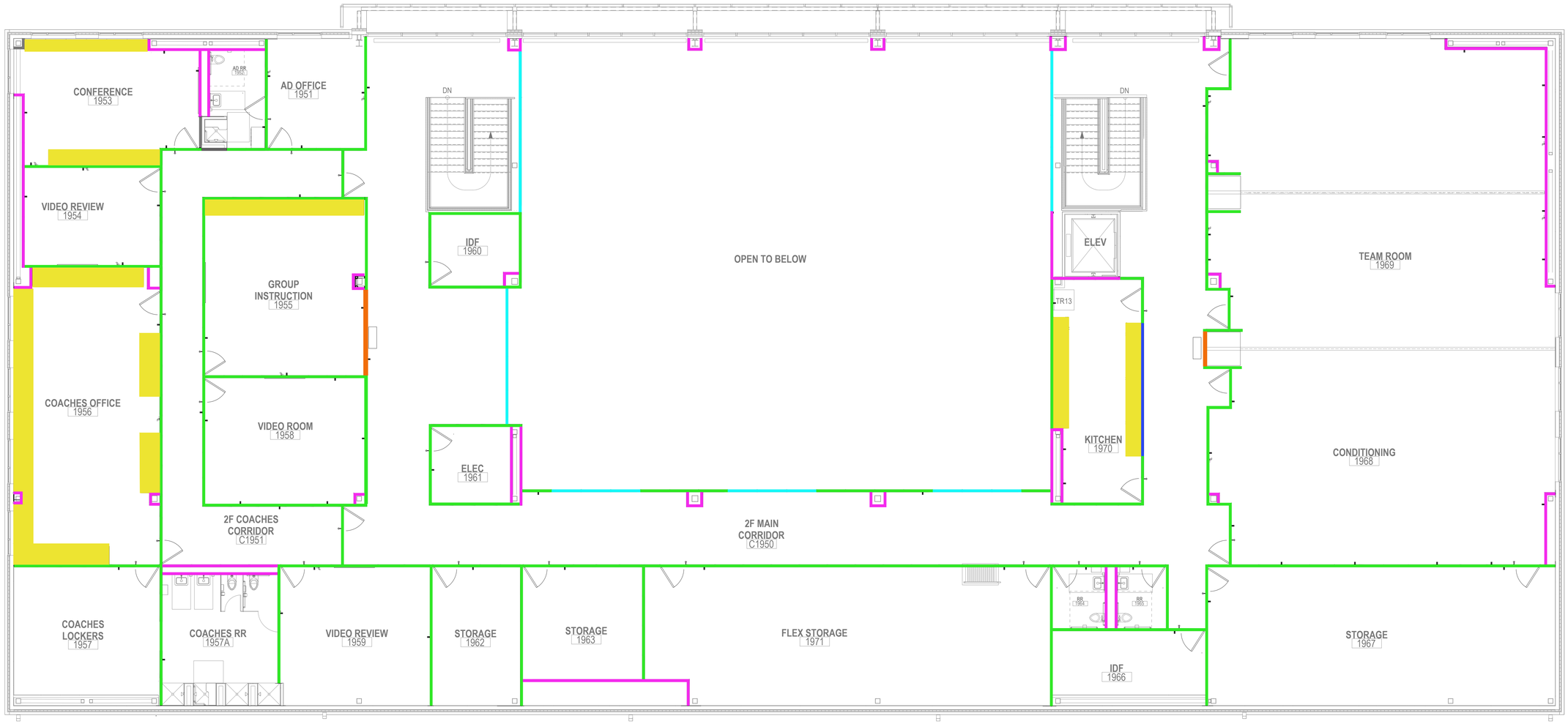

1 FLOOR PLAN
DW-100.8

NOT TO SCALE

DIRTT™

PROJECT DETAILS/NOTES:

FRAME AND TRIM DETAILS

EXTRUSION PROFILE / WALL TYPE:
- ☐ CURVILINEAR
- ☑ RECTILINEAR
- ☐ BLADE
- ☐ EVIL TWIN
- ☐ INSPIRE

FRAME FINISH:
- ☑ ANODIZED ALUMINUM
- ☐ POWDER-COATED
- ☐ VENEER

BASE TRIM COLOR:
- ☑ SILVER
- ☐ BLACK

PVC/GLASS WIPE COLOR:
- ☑ SILVER
- ☐ BLACK

REVEAL:
- ☑ CLASSIC
- ☐ ENZO

COPLANAR:
- ☑ NO
- ☐ YES

FLOOR, CEILING, AND SEISMIC DETAILS

FLOOR TYPE:
- ☑ CARPET
- ☐ HARD SURFACE

WALL HEIGHT: 10'-0"
WEIGHT ROOM: 25'-0"

CEILING TYPE:
- ☐ DRYWALL BULKHEAD
- ☐ CORNICE RAIL
- ☐ LOW WALL
- ☑ GRID

GRID TYPE:
- ☐ 9/16"
- ☑ 15/16"

TILE TYPE:
- ☑ FLUSH
- ☐ CONCEALED
- ☐ TEGULAR

SEISMIC REQUIRED:
- ☑ NO
- ☐ YES

HARDWARE REQUIREMENTS:

DOORS:
REFERENCE DOOR SCHEDULE FOR FURTHER DETAILS

ELECTRICAL PROVISION REQUIRED - SEE ELECTRICAL SHOP DRAWINGS

DATA PROVISION REQUIRED - SEE PON SHOP DRAWINGS

CASEWORK PROVISIONS REQUIRED - SEE CASEWORK SHOP DRAWINGS

ADDITIONAL NOTES:

DRAWING INDEX

DW-100.1-100.3	LEVEL 1 FLOOR PLANS
DW-100.4-100.6	LEVEL 2 FLOOR PLANS
DW-100.7-100.8	HIGHLIGHTED DIRTT SCOPE
DW-200.1-200.7	LEVEL 1 ELEVATIONS
DW-200.8-200.15	LEVEL 2 ELEVATIONS
DW-300.1	LEVEL 1 INTERSECTION DETAILS LEVEL 1 DOOR SCHEDULE
DW-300.2	LEVEL 2 INTERSECTION DETAILS LEVEL 2 DOOR SCHEDULE
DW-400.1-400.2	TYPICAL DIRTT DETAILS
DW-500.1-500.4	CEILING AND FLOOR EFFICIENCIES

Project Name:
GALENA PARK HIGH SCHOOL
FIELD HOUSE
LEVEL 2

Project Address:
1000 KEENE ST
GALENA PARK, TX
77547

DIRTT CONSULTANT SET

-	04JUN25	95% CDS	KA
1	09JUN25	95% CDS (Rev 1)	KA
2	10JUN25	95% CDS (Rev 2)	KA

Project:	148501
Drawn by:	KA
Scale:	AS NOTED
Plot Date:	2025/06/10
Contact:	HEATHER KENNEY
Contact Number:	346-465-4114

HIGHLIGHTED PLAN
SECOND FLOOR

DW-100.8

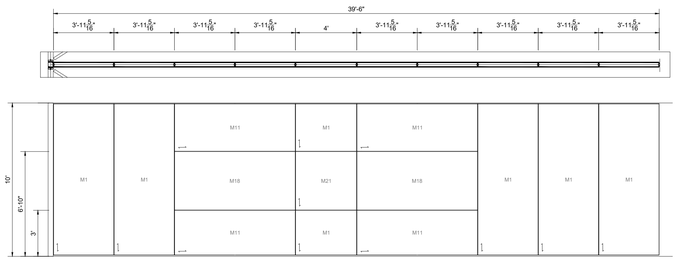

Elevation A

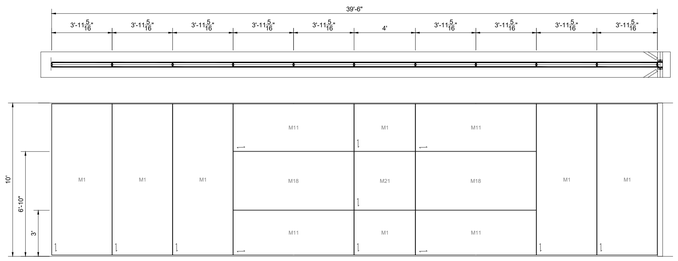

Elevation B

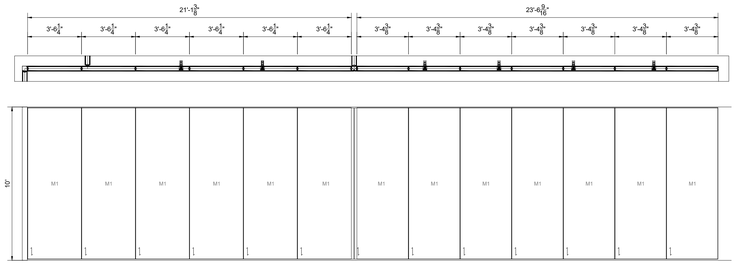

Elevation C

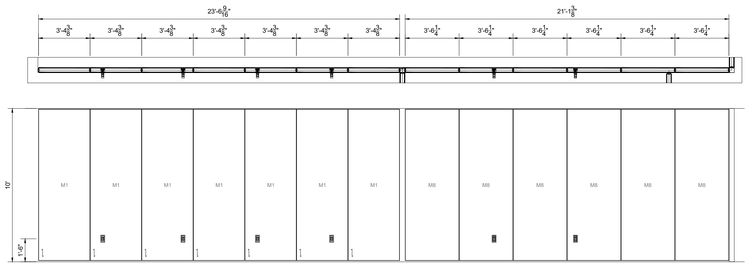

Elevation D

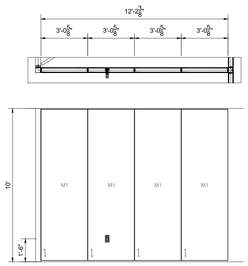

Elevation E

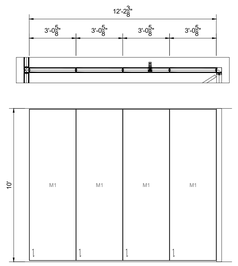

Elevation F

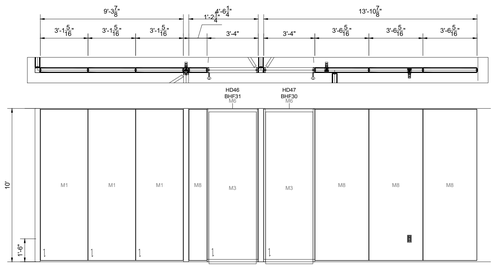

Elevation G

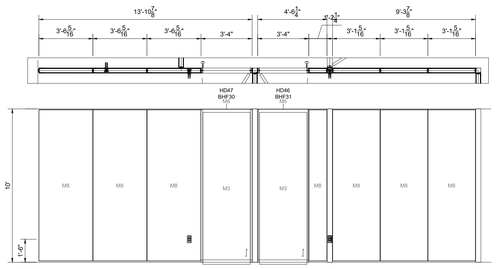

Elevation H

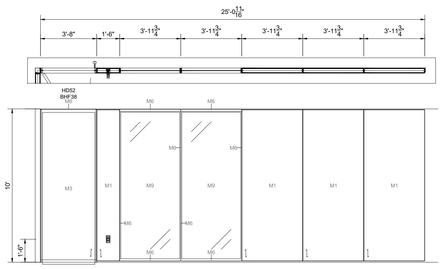

Elevation I

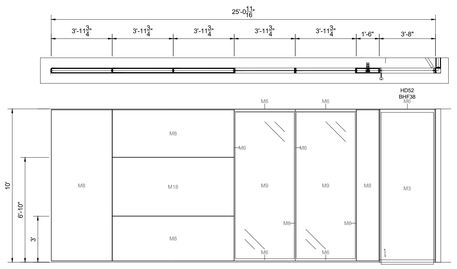

Elevation J

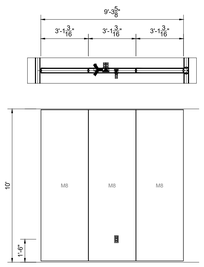

Elevation K

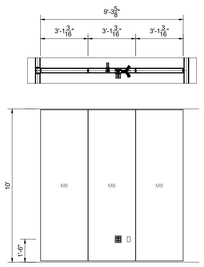

Elevation L

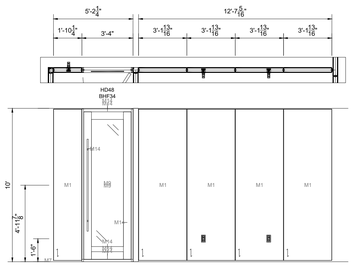

Elevation M

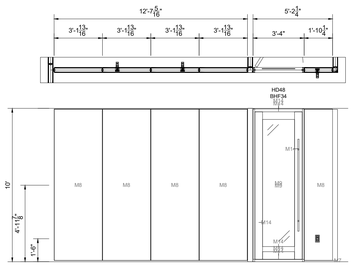

Elevation N

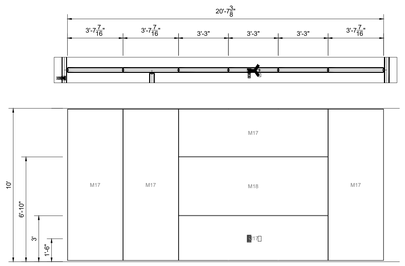

Elevation O

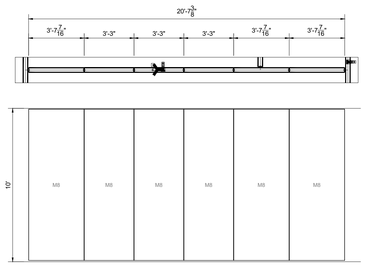

Elevation P

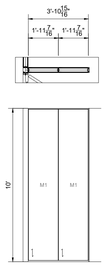

Elevation Q

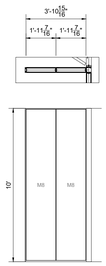

Elevation R

1 ELEVATIONS
DW-200.1

1/4" = 1'-0" / 1:48.000002

DIRTT Walls Finish Schedule		
Tag	Finish	Specification
M1	THRM	Thermofoil Grade 2; DIRTT SSI Thermofoil Canadian Grey Super Matte
M3	THRM	Thermofoil Grade 3; DIRTT OMNOVA Thermofoil Arturo Candlelight
M4	THRM	Thermofoil Grade 1; DIRTT SSI Thermofoil Snow White
M6	ANO	Grade 1 Anodized; Anodized Finish - Clear
M7	PWD	DIRTT Powder Coated Grade 2; Powder Coat - Shimmer DPM50 (Metallic)
M8	PNT	DIRTT ChromacoatPlus Grade 1; ChromacoatPlus - Fog DC82; UC-50022
M9	GLS	Center Mounted Tempered Glass Tile; 6mm Tempered Glass - Clear; No Edge Polish; 6.0mm
M10	GLS	Mirror - Magnetic 6mm Starphire glass; Magnetic Starphire Glass: Mirror; Flat Polish all edges; 6.0mm
M11	THRM	Thermofoil Grade 2; DIRTT SSI Thermofoil Canadian Grey Super Matte (Horizontal)
M12	GLS	Grade 1 (Non-metallic) Backpaint; Starphire Glass: Rich Black DG57; Flat Polish all edges; 6.0mm
M13	GLS	Stick Built Tempered Glass Tile; 10mm Tempered Glass - Clear; Flat Polish all edges; 10.0mm
M14	PWD	Yello PC; Custom Powder Coat
M15	MCF_Graphic	Custom Image; Honeycombe graphic - Gloss; Custom Image
M16	GLS	Back Painted Glass - Custom Color; Custom yellow bpg; Back Painted Glass Custom Color (Color Name); Flat Polish All Edges; Flat Polish all edges; 6.0mm
M17	PNT	DIRTT ChromacoatPlus Grade 1; ChromacoatPlus - Slate DC86; UC-50027
M18	MCF	WriteAway: Buttercup Gloss; .022mm CRS - Porcelain coated white laminate
M19	MCF	WriteAway: Buttercup Gloss
M20	THRM	Thermofoil Grade 1; DIRTT SSI Thermofoil Black
M21	FAB	DIRTT Fabric G10 Glint; Glint Gobi; .022mm CRS - Porcelain coated white laminate
M22	FAB	DIRTT Fabric G10 Glint; Glint Gobi (Railroaded); .022mm CRS - Porcelain coated white laminate

DIRTT

PROJECT DETAILS/NOTES:

FRAME AND TRIM DETAILS

EXTRUSION PROFILE / WALL TYPE:
- [ ] CURVILINEAR
- [x] RECTILINEAR
- [ ] BLADE
- [ ] EVIL TWIN
- [ ] INSPIRE

FRAME FINISH:
- [x] ANODIZED ALUMINUM
- [ ] POWDER-COATED
- [ ] VENEER

BASE TRIM COLOR:
- [x] SILVER
- [ ] BLACK

PVC/GLASS WIPE COLOR:
- [x] SILVER
- [ ] BLACK

REVEAL:
- [x] CLASSIC
- [ ] ENZO

COPLANAR:
- [x] NO
- [ ] YES

FLOOR, CEILING, AND SEISMIC DETAILS

FLOOR TYPE:
- [x] CARPET
- [ ] HARD SURFACE

WALL HEIGHT: 10'-0"
LOW WALL: 4'-0"
WEIGHT ROOM 20'-0"

CEILING TYPE:
- [ ] DRYWALL BULKHEAD
- [ ] CORNICE RAIL
- [ ] LOW WALL
- [x] GRID

GRID TYPE:
- [ ] 9/16"
- [x] 15/16"

TILE TYPE:
- [x] FLUSH
- [ ] CONCEALED
- [ ] TEGULAR

SEISMIC REQUIRED:
- [x] NO
- [ ] YES

HARDWARE REQUIREMENTS:

DOORS:
REFERENCE DOOR SCHEDULE FOR FURTHER DETAILS

ELECTRICAL PROVISION REQUIRED - SEE ELECTRICAL SHOP DRAWINGS

DATA PROVISION REQUIRED - SEE PON SHOP DRAWINGS

CASEWORK PROVISIONS REQUIRED - SEE CASEWORK SHOP DRAWINGS

ADDITIONAL NOTES:

DRAWING INDEX

DW-100.1-100.3	LEVEL 1 FLOOR PLANS
DW-100.4-100.6	LEVEL 2 FLOOR PLANS
DW-100.7-100.8	HIGHLIGHTED DIRTT SCOPE
DW-200.1-200.7	LEVEL 1 ELEVATIONS
DW-200.8-200.15	LEVEL 2 ELEVATIONS
DW-300.1	LEVEL 1 INTERSECTION DETAILS LEVEL 1 DOOR SCHEDULE
DW-300.2	LEVEL 2 INTERSECTION DETAILS LEVEL 2 DOOR SCHEDULE
DW-400.1-400.2	TYPICAL DIRTT DETAILS
DW-500.1-500.4	CEILING AND FLOOR AND EFFICIENCIES

Project Name:
GALENA PARK HIGH SCHOOL
FIELD HOUSE
LEVEL 1

Project Address:
1000 KEENE ST
GALENA PARK, TX
77547

DIRTT
CONSULTANT
SET

Project:	148501
Drawn by:	KA
Scale:	AS NOTED
Plot Date:	2025/06/10
Contact:	HEATHER KENNEY
Contact Number:	346-465-4114

ELEVATIONS
FIRST FLOOR

DW-200.1

This drawing is the confidential and proprietary information of DIRTT Environmental Solutions Ltd. (DIRTT). Any reproduction, alteration, disclosure or use of this drawing other than as agreed to by DIRTT is expressly prohibited. Do not use drawing for cute purposes. All dim dimensions, drawings, details, and specifications contained herein must be verified by sub-contractors and any discrepancies must be reported to DIRTT in writing before proceeding with work. See cover page of drawing package for full disclaimer.

C:\Users\SWILLI~1\AppData\Local\Temp\ICEcad-b590f7d8-0cc1-4e45-80ffdf251e13a6c8\ICEcad.dwg 2025-6-10 12:37:41 PM

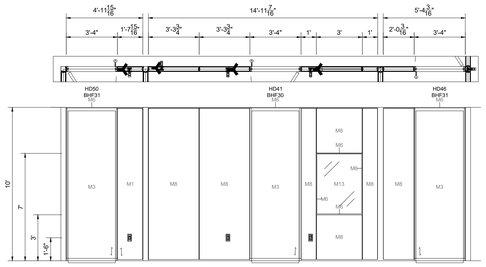

Elevation S

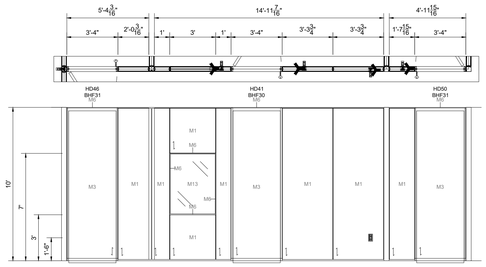

Elevation T

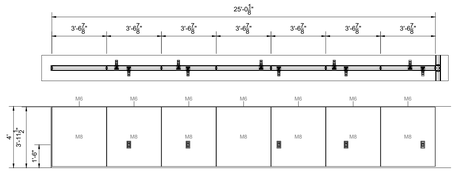

Elevation U

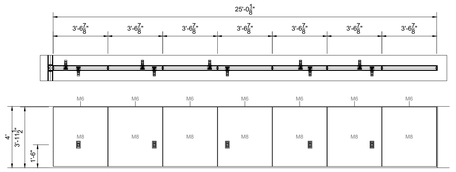

Elevation V

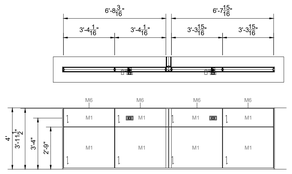

Elevation W

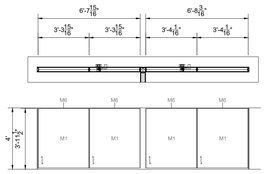

Elevation X

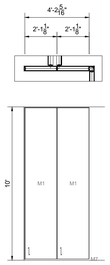

Elevation Y

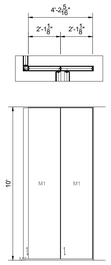

Elevation Z

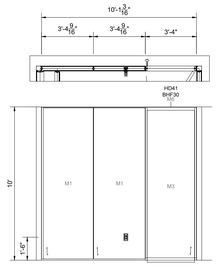

Elevation AA

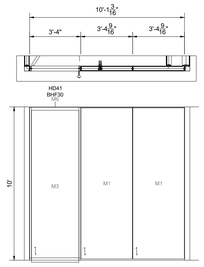

Elevation AB

Elevation AC

Elevation AD

Elevation AE

Elevation AF

Elevation AG

Elevation AH

Elevation AI

Elevation AJ

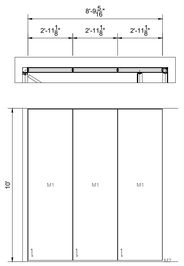

Elevation AK

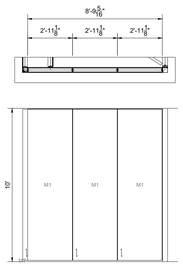

Elevation AL

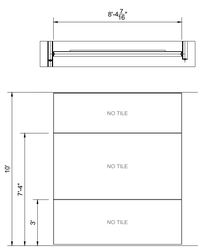

Elevation AM

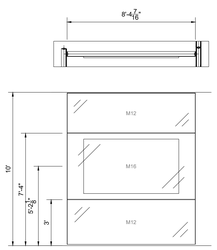

Elevation AN

Elevation AO

Elevation AP

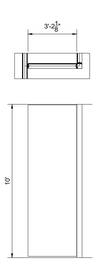

Elevation AQ

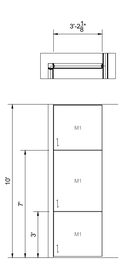

Elevation AR

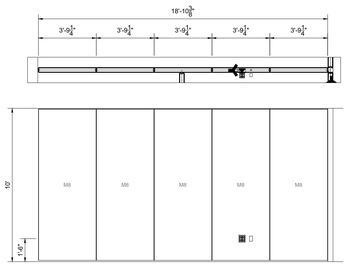

Elevation AS

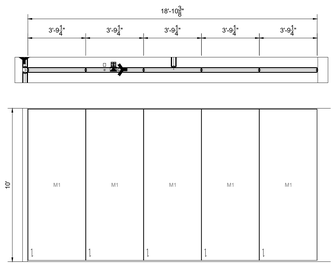

Elevation AT

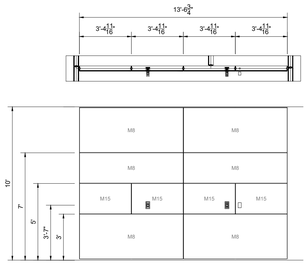

Elevation AU

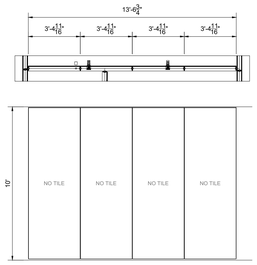

Elevation AV

Elevation AW

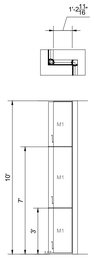

Elevation AX

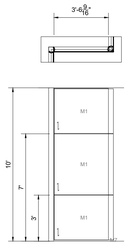

Elevation AY

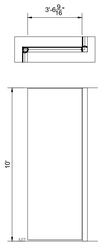

Elevation AZ

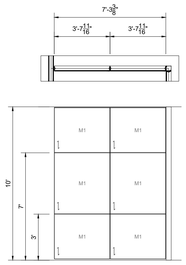

Elevation BA

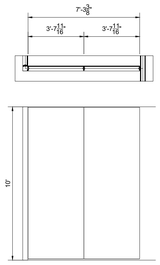

Elevation BB

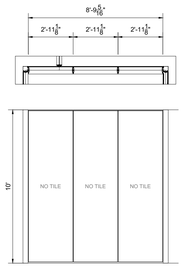

Elevation BC

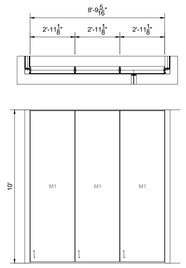

Elevation BD

Elevation BE

1 ELEVATIONS
DW-200.2

############# / ############

DIRTT Walls Finish Schedule		
Tag	Finish	Specification
M1	THRM	Thermofoil Grade 2; DIRTT SSI Thermofoil Canadian Grey Super Matte
M3	THRM	Thermofoil Grade 3; DIRTT OMNOVA Thermofoil Arturo Candlelight
M4	THRM	Thermofoil Grade 1; DIRTT SSI Thermofoil Snow White
M6	ANO	Grade 1 Anodized; Anodized Finish - Clear
M7	PWD	DIRTT Powder Coated Grade 2; Powder Coat - Shimmer DPM50 (Metallic)
M8	PNT	DIRTT ChromacoatPlus Grade 1; ChromacoatPlus - Fog DC82; UC-50022
M9	GLS	Center Mounted Tempered Glass Tile; 6mm Tempered Glass - Clear; No Edge Polish; 6.0mm
M10	GLS	Mirror - Magnetic 6mm Starphire glass; Magnetic Starphire Glass: Mirror; Flat Polish all edges; 6.0mm
M11	THRM	Thermofoil Grade 2; DIRTT SSI Thermofoil Canadian Grey Super Matte (Horizontal)
M12	GLS	Grade 1 (Non-metallic) Backpaint; Starphire Glass: Rich Black DG57; Flat Polish all edges; 6.0mm
M13	GLS	Stick Built Tempered Glass Tile; 10mm Tempered Glass - Clear; Flat Polish all edges; 10.0mm
M14	PWD	Yello PC; Custom Powder Coat
M15	MCF_Graphic	Custom Image; Honeycombe graphic - Gloss; Custom Image
M16	GLS	Back Painted Glass - Custom Color; Custom yellow bpg; Back Painted Glass Custom Color (Color Name); Flat Polish All Edges; Flat Polish all edges; 6.0mm
M17	PNT	DIRTT ChromacoatPlus Grade 1; ChromacoatPlus - Slate DC86; UC-50027
M18	MCF	WriteAway: Buttercup Gloss; .022mm CRS - Porcelain coated white laminate
M19	MCF	WriteAway: Buttercup Gloss
M20	THRM	Thermofoil Grade 1; DIRTT SSI Thermofoil Black
M21	FAB	DIRTT Fabric G10 Glint; Glint Gobi; .022mm CRS - Porcelain coated white laminate
M22	FAB	DIRTT Fabric G10 Glint; Glint Gobi (Railroaded); .022mm CRS - Porcelain coated white laminate

DIRTT™

PROJECT DETAILS/NOTES:

FRAME AND TRIM DETAILS

EXTRUSION PROFILE / WALL TYPE:
- ☐ CURVILINEAR
- ☑ RECTILINEAR
- ☐ BLADE
- ☐ EVIL TWIN
- ☐ INSPIRE

FRAME FINISH:
- ☑ ANODIZED ALUMINUM
- ☐ POWDER-COATED
- ☐ VENEER

BASE TRIM COLOR:
- ☑ SILVER
- ☐ BLACK

PVC/GLASS WIPE COLOR:
- ☑ SILVER
- ☐ BLACK

REVEAL:
- ☑ CLASSIC
- ☐ ENZO

COPLANAR:
- ☑ NO
- ☐ YES

FLOOR, CEILING, AND SEISMIC DETAILS

FLOOR TYPE:
- ☑ CARPET
- ☐ HARD SURFACE

WALL HEIGHT: 10'-0"
LOW WALL: 4'-0"
WEIGHT ROOM 25'-0"

CEILING TYPE:
- ☐ DRYWALL BULKHEAD
- ☐ CORNICE RAIL
- ☐ LOW WALL
- ☑ GRID

GRID TYPE:
- ☐ 9/16"
- ☑ 15/16"

TILE TYPE:
- ☑ FLUSH
- ☐ CONCEALED
- ☐ TEGULAR

SEISMIC REQUIRED:
- ☑ NO
- ☐ YES

HARDWARE REQUIREMENTS:

DOORS:
REFERENCE DOOR SCHEDULE FOR FURTHER DETAILS

ELECTRICAL PROVISION REQUIRED - SEE ELECTRICAL SHOP DRAWINGS

DATA PROVISION REQUIRED - SEE PON SHOP DRAWINGS

CASEWORK PROVISIONS REQUIRED - SEE CASEWORK SHOP DRAWINGS

ADDITIONAL NOTES:

DRAWING INDEX

DW-100.1-100.3	LEVEL 1 FLOOR PLANS
DW-100.4-100.6	LEVEL 2 FLOOR PLANS
DW-100.7-100.8	HIGHLIGHTED DIRTT SCOPE
DW-200.1-200.7	LEVEL 1 ELEVATIONS
DW-200.8-200.15	LEVEL 2 ELEVATIONS
DW-300.1	LEVEL 1 INTERSECTION DETAILS LEVEL 1 DOOR SCHEDULE
DW-300.2	LEVEL 2 INTERSECTION DETAILS LEVEL 2 DOOR SCHEDULE
DW-400.1-400.2	TYPICAL DIRTT DETAILS
DW-500.1-500.4	CEILING AND FLOOR AND EFFICIENCIES

Project Name:
GALENA PARK HIGH SCHOOL
FIELD HOUSE
LEVEL 1

Project Address:
1000 KEENE ST
GALENA PARK, TX
77547

DIRTT
CONSULTANT
SET

Project:	148501
Drawn by:	KA
Scale:	AS NOTED
Plot Date:	2025/06/10
Contact:	HEATHER KENNEY
Contact Number:	346-465-4114

ELEVATIONS
FIRST FLOOR

DW-200.2

This drawing is the confidential and proprietary information of DIRTT Environmental Solutions Ltd. (DIRTT). Any reproduction, alteration, disclosure or use of this drawing other than as agreed to by DIRTT is expressly prohibited. Do not use drawing for cutting purposes. All dimensions, drawings, details, and specifications contained herein must be verified by sub-contractors and any discrepancies must be reported to DIRTT in writing before proceeding with work. See cover page of drawing package for full disclaimer.

C:\Users\SWILLI~1\AppData\Local\Temp\ICEcad-b590f7d8-0cc1-4e45-80ffdf251e13a6c8\ICEcad.dwg 2025-6-10 12:37:49 PM

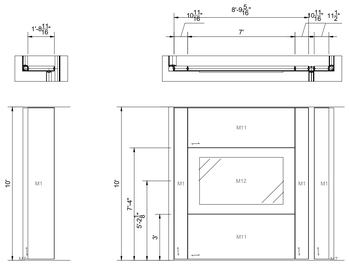

Elevation BF

Elevation BG

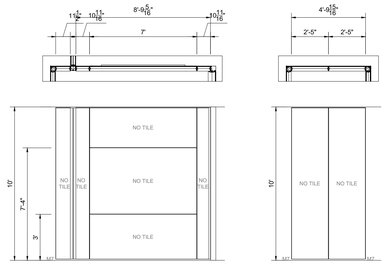

Elevation BH

Elevation BI

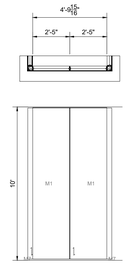

Elevation BJ

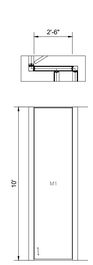

Elevation BK

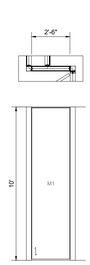

Elevation BL

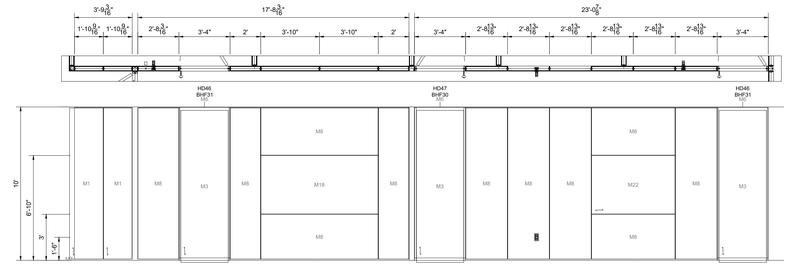

Elevation BM

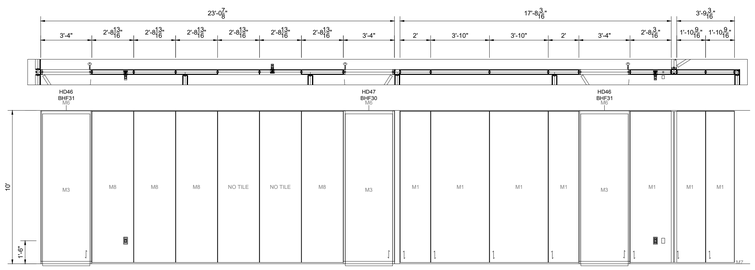

Elevation BN

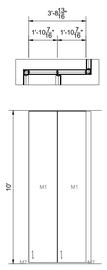

Elevation BO

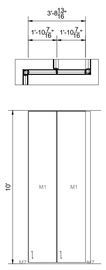

Elevation BP

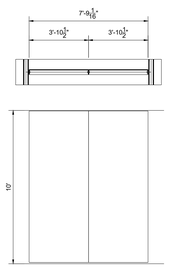

Elevation BQ

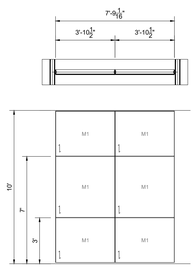

Elevation BR

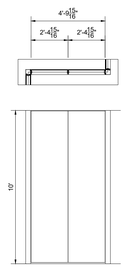

Elevation BS

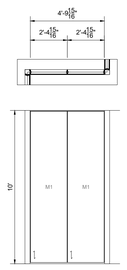

Elevation BT

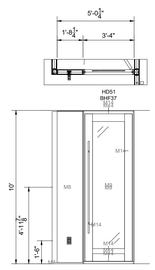

Elevation BU

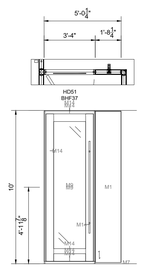

Elevation BV

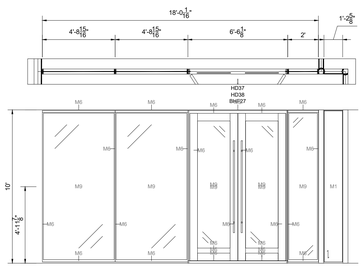

Elevation BW

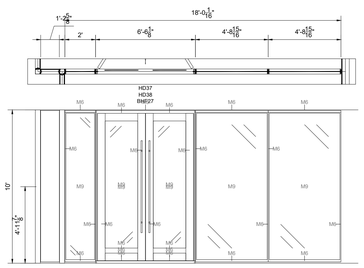

Elevation BX

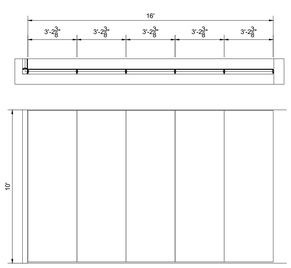

Elevation BY

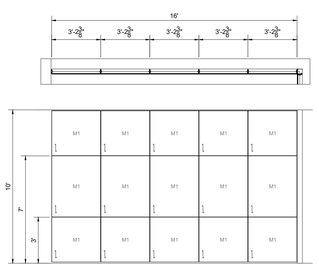

Elevation BZ

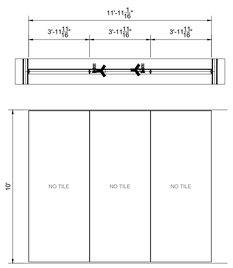

Elevation CA

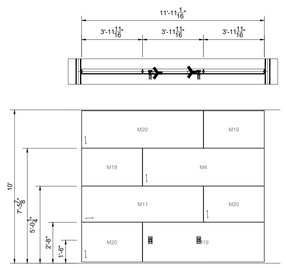

Elevation CB

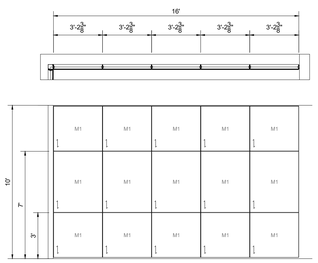

Elevation CC

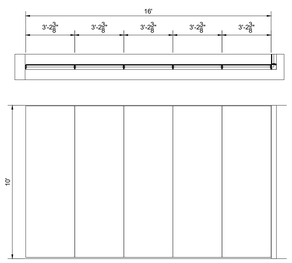

Elevation CD

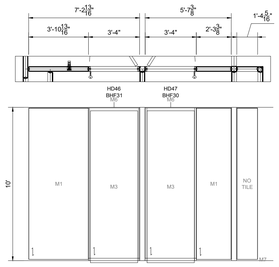

Elevation CE

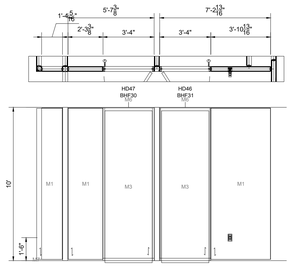

Elevation CF

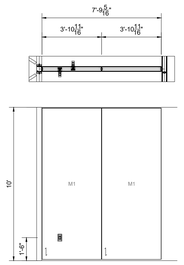

Elevation CG

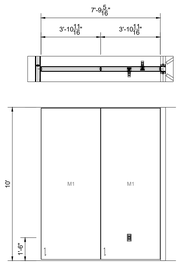

Elevation CH

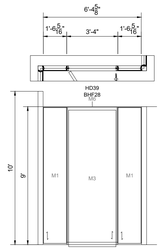

Elevation CI

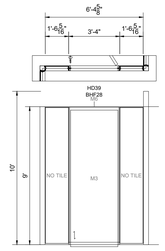

Elevation CJ

1 ELEVATIONS
DW-200.3

############# / ###########

DIRTT Walls Finish Schedule		
Tag	Finish	Specification
M1	THRM	Thermofoil Grade 2; DIRTT SSI Thermofoil Canadian Grey Super Matte
M3	THRM	Thermofoil Grade 3; DIRTT OMNOVA Thermofoil Arturo Candlelight
M4	THRM	Thermofoil Grade 1; DIRTT SSI Thermofoil Snow White
M6	ANO	Grade 1 Anodized; Anodized Finish - Clear
M7	PWD	DIRTT Powder Coated Grade 2; Powder Coat - Shimmer DPM50 (Metallic)
M8	PNT	DIRTT ChromacoatPlus Grade 1; ChromacoatPlus - Fog DC82; UC-50022
M9	GLS	Center Mounted Tempered Glass Tile; 6mm Tempered Glass - Clear; No Edge Polish; 6.0mm
M10	GLS	Mirror - Magnetic 6mm Starphire glass; Magnetic Starphire Glass: Mirror; Flat Polish all edges; 6.0mm
M11	THRM	Thermofoil Grade 2; DIRTT SSI Thermofoil Canadian Grey Super Matte (Horizontal)
M12	GLS	Grade 1 (Non-metallic) Backpaint; Starphire Glass: Rich Black DG57; Flat Polish all edges; 6.0mm
M13	GLS	Stick Built Tempered Glass Tile; 10mm Tempered Glass - Clear; Flat Polish all edges; 10.0mm
M14	PWD	Yello PC; Custom Powder Coat
M15	MCF_Graphic	Custom Image; Honeycombe graphic - Gloss; Custom Image
M16	GLS	Back Painted Glass - Custom Color; Custom yellow bpg; Back Painted Glass Custom Color (Color Name); Flat Polish All Edges; Flat Polish all edges; 6.0mm
M17	PNT	DIRTT ChromacoatPlus Grade 1; ChromacoatPlus - Slate DC86; UC-50027
M18	MCF	WriteAway: Buttercup Gloss; .022mm CRS - Porcelain coated white laminate
M19	MCF	WriteAway: Buttercup Gloss
M20	THRM	Thermofoil Grade 1; DIRTT SSI Thermofoil Black
M21	FAB	DIRTT Fabric G10 Glint; Glint Gobi; .022mm CRS - Porcelain coated white laminate
M22	FAB	DIRTT Fabric G10 Glint; Glint Gobi (Railroaded); .022mm CRS - Porcelain coated white laminate

DIRTT

PROJECT DETAILS/NOTES:

FRAME AND TRIM DETAILS

EXTRUSION PROFILE / WALL TYPE:
- [ ] CURVILINEAR
- [x] RECTILINEAR
- [ ] BLADE
- [ ] EVIL TWIN
- [ ] INSPIRE

FRAME FINISH:
- [x] ANODIZED ALUMINUM
- [ ] POWDER-COATED
- [ ] VENEER

BASE TRIM COLOR:
- [x] SILVER
- [ ] BLACK

PVC/GLASS WIPE COLOR:
- [x] SILVER
- [ ] BLACK

REVEAL:
- [x] CLASSIC
- [ ] ENZO

COPLANAR:
- [x] NO
- [ ] YES

FLOOR, CEILING, AND SEISMIC DETAILS

FLOOR TYPE:
- [x] CARPET
- [ ] HARD SURFACE

WALL HEIGHT: 10'-0"
LOW WALL: 4'-0"
WEIGHT ROOM 25'-0"

CEILING TYPE:
- [ ] DRYWALL BULKHEAD
- [ ] CORNICE RAIL
- [ ] LOW WALL
- [x] GRID

GRID TYPE:
- [ ] 9/16"
- [x] 15/16"

TILE TYPE:
- [x] FLUSH
- [ ] CONCEALED
- [ ] TEGULAR

SEISMIC REQUIRED:
- [x] NO
- [ ] YES

HARDWARE REQUIREMENTS:

DOORS:
REFERENCE DOOR SCHEDULE FOR FURTHER DETAILS

ELECTRICAL PROVISION REQUIRED - SEE ELECTRICAL SHOP DRAWINGS

DATA PROVISION REQUIRED - SEE PON SHOP DRAWINGS

CASEWORK PROVISIONS REQUIRED - SEE CASEWORK SHOP DRAWINGS

ADDITIONAL NOTES:

DRAWING INDEX

DW-100.1-100.3	LEVEL 1 FLOOR PLANS
DW-100.4-100.6	LEVEL 2 FLOOR PLANS
DW-100.7-100.8	HIGHLIGHTED DIRTT SCOPE
DW-200.1-200.7	LEVEL 1 ELEVATIONS
DW-200.8-200.15	LEVEL 2 ELEVATIONS
DW-300.1	LEVEL 1 INTERSECTION DETAILS LEVEL 1 DOOR SCHEDULE
DW-300.2	LEVEL 2 INTERSECTION DETAILS LEVEL 2 DOOR SCHEDULE
DW-400.1-400.2	TYPICAL DIRTT DETAILS
DW-500.1-500.4	CEILING AND FLOOR AND EFFICIENCIES

Project Name:
GALENA PARK HIGH SCHOOL
FIELD HOUSE
LEVEL 1

Project Address:
1000 KEENE ST
GALENA PARK, TX
77547

DIRTT
CONSULTANT
SET

Project:	148501
Drawn by:	KA
Scale:	AS NOTED
Plot Date:	2025/06/10
Contact:	HEATHER KENNEY
Contact Number:	346-465-4114

ELEVATIONS
FIRST FLOOR

DW-200.3

This drawing is the confidential and proprietary information of DIRTT Environmental Solutions Ltd. (DIRTT). Any reproduction, alteration, disclosure or use of this drawing other than as agreed to by DIRTT is expressly prohibited. Do not use drawing for rule purposes. All dim dimensions, drawings, details, and specifications contained herein must be verified by sub-contractors and any discrepancies must be reported to DIRTT in writing before proceeding with work. See cover page of drawing package for full disclaimer.

C:\Users\SWILLI~1\AppData\Local\Temp\ICEcad-b590f7d8-0cc1-4e45-80ffdf251e13a6cb\ICEcad.dwg 2025-6-10 12:38:00 PM

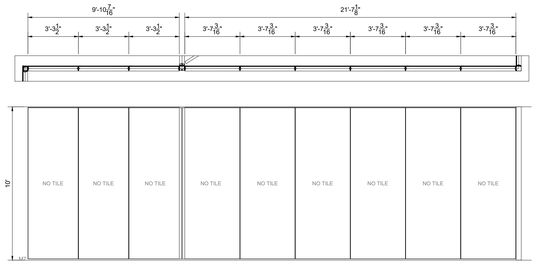

Elevation CK

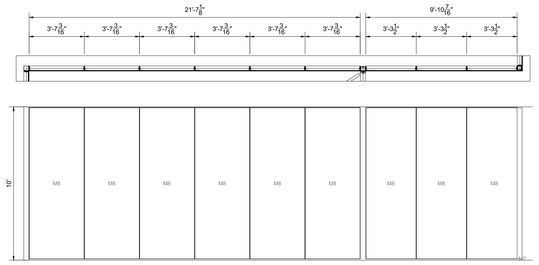

Elevation CL

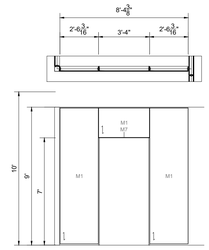

Elevation CM

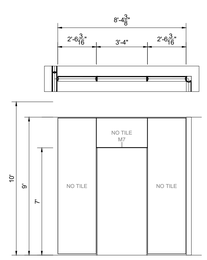

Elevation CN

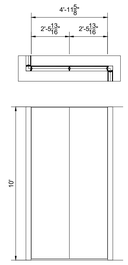

Elevation CO

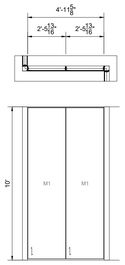

Elevation CP

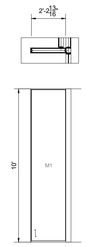

Elevation CQ

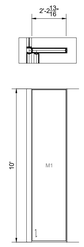

Elevation CR

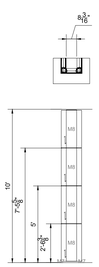

Elevation CS

Elevation CT

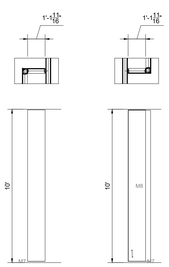

Elevation CU

Elevation CV

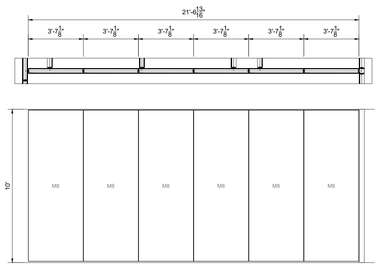

Elevation CW

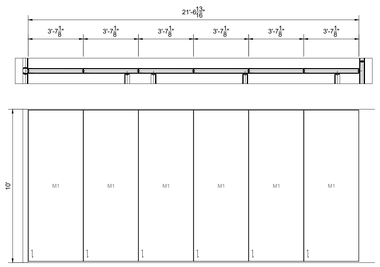

Elevation CX

Elevation CY

Elevation CZ

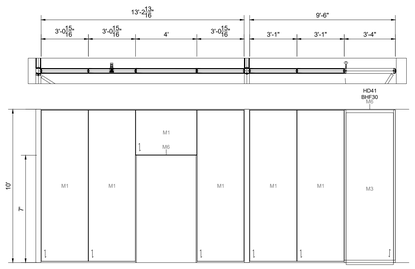

Elevation DA

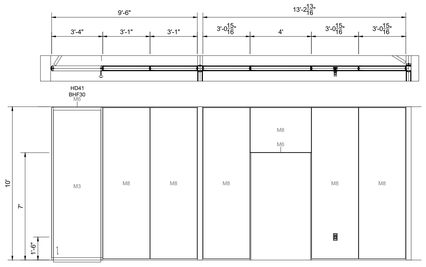

Elevation DB

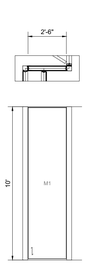

Elevation DC

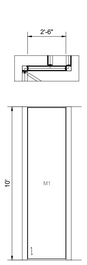

Elevation DD

Elevation DE

Elevation DF

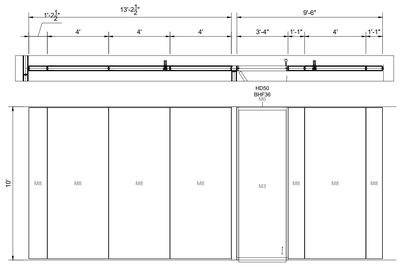

Elevation DG

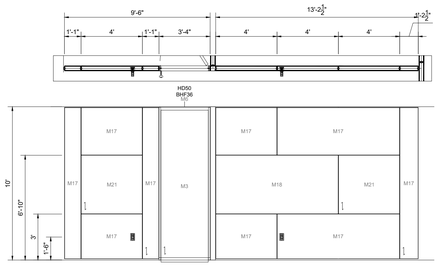

Elevation DH

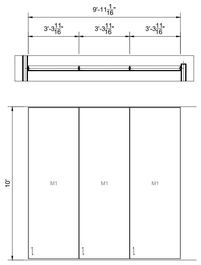

Elevation DI

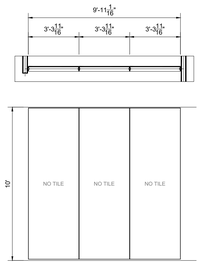

Elevation DJ

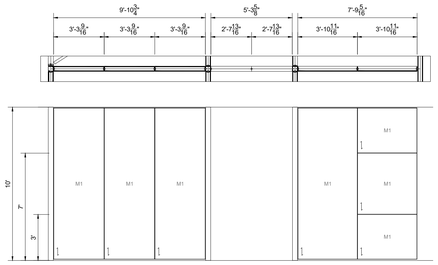

Elevation DK

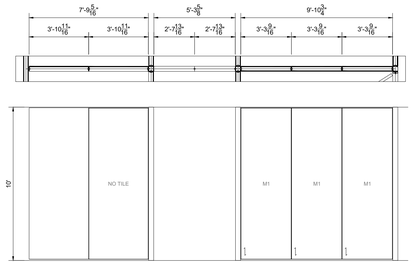

Elevation DL

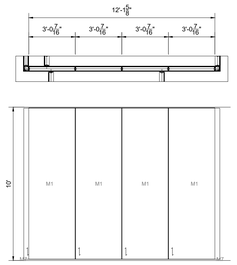

Elevation DM

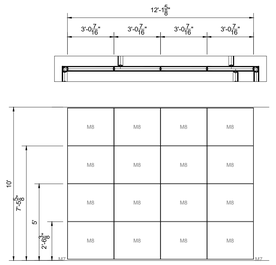

Elevation DN

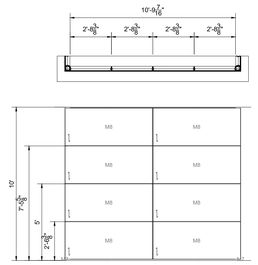

Elevation DO

1 ELEVATIONS
DW-200.4

############# / ##########

DIRTT Walls Finish Schedule		
Tag	Finish	Specification
M1	THRM	Thermofoil Grade 2; DIRTT SSI Thermofoil Canadian Grey Super Matte
M3	THRM	Thermofoil Grade 3; DIRTT OMNOVA Thermofoil Arturo Candlelight
M4	THRM	Thermofoil Grade 1; DIRTT SSI Thermofoil Snow White
M6	ANO	Grade 1 Anodized; Anodized Finish - Clear
M7	PWD	DIRTT Powder Coated Grade 2; Powder Coat - Shimmer DPM50 (Metallic)
M8	PNT	DIRTT ChromacoatPlus Grade 1; ChromacoatPlus - Fog DC82; UC-50022
M9	GLS	Center Mounted Tempered Glass Tile; 6mm Tempered Glass - Clear; No Edge Polish; 6.0mm
M10	GLS	Mirror - Magnetic 6mm Starphire glass; Magnetic Starphire Glass: Mirror; Flat Polish all edges; 6.0mm
M11	THRM	Thermofoil Grade 2; DIRTT SSI Thermofoil Canadian Grey Super Matte (Horizontal)
M12	GLS	Grade 1 (Non-metallic) Backpaint; Starphire Glass: Rich Black DG57; Flat Polish all edges; 6.0mm
M13	GLS	Stick Built Tempered Glass Tile; 10mm Tempered Glass - Clear; Flat Polish all edges; 10.0mm
M14	PWD	Yello PC; Custom Powder Coat
M15	MCF_Graphic	Custom Image; Honeycombe graphic - Gloss; Custom Image
M16	GLS	Back Painted Glass - Custom Color; Custom yellow bpg; Back Painted Glass Custom Color (Color Name); Flat Polish All Edges; Flat Polish all edges; 6.0mm
M17	PNT	DIRTT ChromacoatPlus Grade 1; ChromacoatPlus - Slate DC86; UC-50027
M18	MCF	WriteAway: Buttercup Gloss; .022mm CRS - Porcelain coated white laminate
M19	MCF	WriteAway: Buttercup Gloss
M20	THRM	Thermofoil Grade 1; DIRTT SSI Thermofoil Black
M21	FAB	DIRTT Fabric G10 Glint; Glint Gobi; .022mm CRS - Porcelain coated white laminate
M22	FAB	DIRTT Fabric G10 Glint; Glint Gobi (Railroaded); .022mm CRS - Porcelain coated white laminate

DIRTT™

PROJECT DETAILS/NOTES:

FRAME AND TRIM DETAILS

EXTRUSION PROFILE / WALL TYPE:
- [ ] CURVILINEAR
- [x] RECTILINEAR
- [ ] BLADE
- [ ] EVIL TWIN
- [ ] INSPIRE

FRAME FINISH:
- [x] ANODIZED ALUMINUM
- [ ] POWDER-COATED
- [ ] VENEER

BASE TRIM COLOR:
- [x] SILVER
- [ ] BLACK

PVC/GLASS WIPE COLOR:
- [x] SILVER
- [ ] BLACK

REVEAL:
- [x] CLASSIC
- [ ] ENZO

COPLANAR:
- [x] NO
- [ ] YES

FLOOR, CEILING, AND SEISMIC DETAILS

FLOOR TYPE:
- [x] CARPET
- [ ] HARD SURFACE

WALL HEIGHT: 10'-0"
LOW WALL: 4'-0"
WEIGHT ROOM 20'-0"

CEILING TYPE:
- [ ] DRYWALL BULKHEAD
- [ ] CORNICE RAIL
- [ ] LOW WALL
- [x] GRID

GRID TYPE:
- [ ] 9/16"
- [x] 15/16"

TILE TYPE:
- [x] FLUSH
- [ ] CONCEALED
- [ ] TEGULAR

SEISMIC REQUIRED:
- [x] NO
- [ ] YES

HARDWARE REQUIREMENTS:

DOORS:
REFERENCE DOOR SCHEDULE FOR FURTHER DETAILS

ELECTRICAL PROVISION REQUIRED - SEE ELECTRICAL SHOP DRAWINGS

DATA PROVISION REQUIRED - SEE PON SHOP DRAWINGS

CASEWORK PROVISIONS REQUIRED - SEE CASEWORK SHOP DRAWINGS

ADDITIONAL NOTES:

DRAWING INDEX

DW-100.1-100.3	LEVEL 1 FLOOR PLANS
DW-100.4-100.6	LEVEL 2 FLOOR PLANS
DW-100.7-100.8	HIGHLIGHTED DIRTT SCOPE
DW-200.1-200.7	LEVEL 1 ELEVATIONS
DW-200.8-200.15	LEVEL 2 ELEVATIONS
DW-300.1	LEVEL 1 INTERSECTION DETAILS LEVEL 1 DOOR SCHEDULE
DW-300.2	LEVEL 2 INTERSECTION DETAILS LEVEL 2 DOOR SCHEDULE
DW-400.1-400.2	TYPICAL DIRTT DETAILS
DW-500.1-500.4	CEILING AND FLOOR AND EFFICIENCIES

Project Name:
GALENA PARK HIGH SCHOOL
FIELD HOUSE
LEVEL 1

Project Address:
1000 KEENE ST
GALENA PARK, TX
77547

DIRTT
CONSULTANT
SET

Project:	148501
Drawn by:	KA
Scale:	AS NOTED
Plot Date:	2025/06/10
Contact:	HEATHER KENNEY
Contact Number:	346-465-4114

ELEVATIONS
FIRST FLOOR

DW-200.4

This drawing is the confidential and proprietary information of DIRTT Environmental Solutions Ltd. (DIRTT). Any reproduction, alteration, disclosure or use of this drawing other than as agreed to by DIRTT is expressly prohibited. Do not use drawing for cute purposes. All site dimensions, drawings, details, and specifications contained herein must be verified by sub-contractors and any discrepancies must be reported to DIRTT in writing before proceeding with work. See cover page of drawing package for full disclaimer.

C:\Users\SWILLI~1\AppData\Local\Temp\ICEcad-b590f7d8-0cc1-4e45-80ffdf251e13a6cb\ICEcad.dwg 2025-6-10 12:38:10 PM

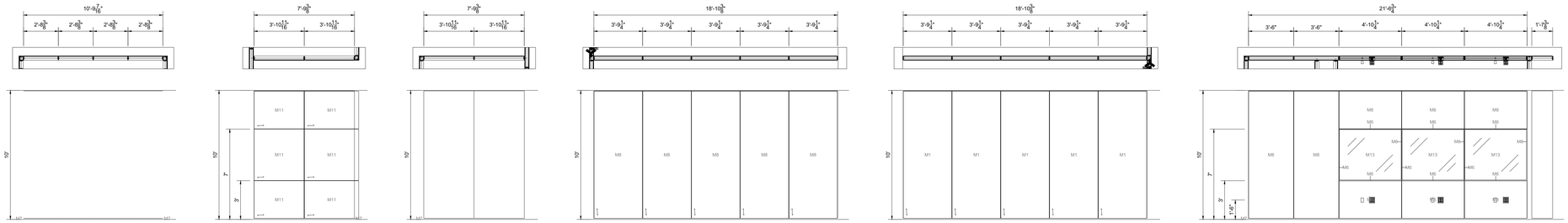

Elevation DP

Elevation DQ

Elevation DR

Elevation DS

Elevation DT

Elevation DU

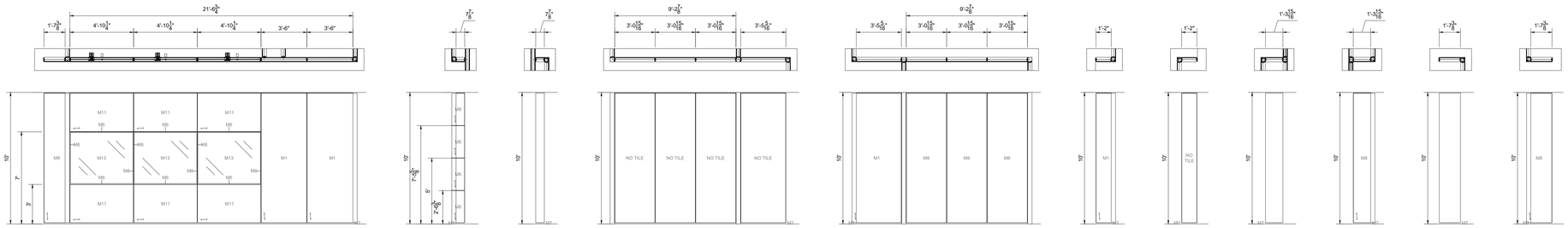

Elevation DV

Elevation DW

Elevation DX

Elevation DY

Elevation DZ

Elevation EA

Elevation EB

Elevation EC

Elevation ED

Elevation EE

Elevation EF

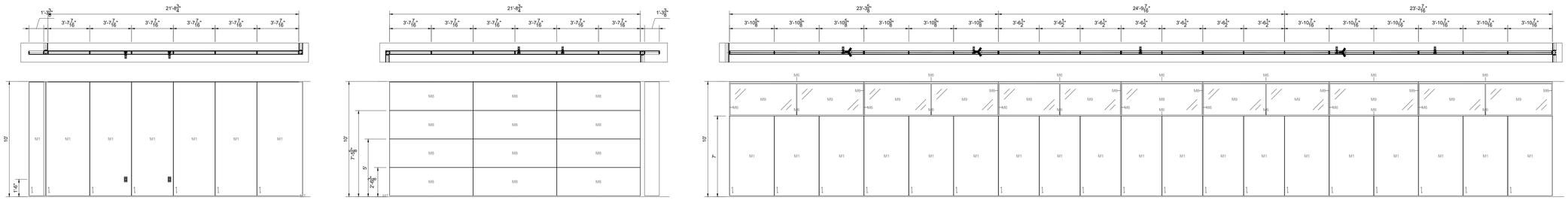

Elevation EG

Elevation EH

Elevation EI

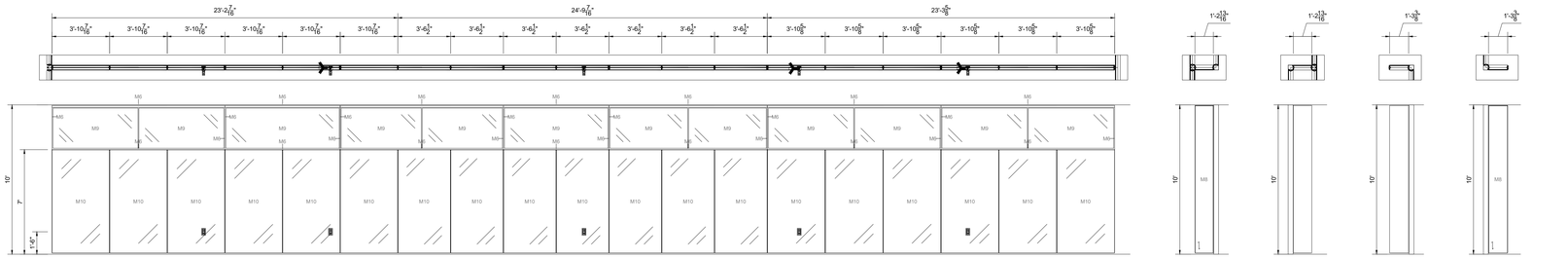

Elevation EJ

Elevation EK

Elevation EL

Elevation EM

Elevation EN

1 ELEVATIONS
DW-200.5

1/4" = 1'0" / 1:48.000002

DIRTT Walls Finish Schedule		
Tag	Finish	Specification
M1	THRM	Thermofoil Grade 2; DIRTT SSI Thermofoil Canadian Grey Super Matte
M3	THRM	Thermofoil Grade 3; DIRTT OMNOVA Thermofoil Arturo Candlelight
M4	THRM	Thermofoil Grade 1; DIRTT SSI Thermofoil Snow White
M6	ANO	Grade 1 Anodized; Anodized Finish - Clear
M7	PWD	DIRTT Powder Coated Grade 2; Powder Coat - Shimmer DPM50 (Metallic)
M8	PNT	DIRTT ChromacoatPlus Grade 1; ChromacoatPlus - Fog DC82; UC-50022
M9	GLS	Center Mounted Tempered Glass Tile; 6mm Tempered Glass - Clear; No Edge Polish; 6.0mm
M10	GLS	Mirror - Magnetic 6mm Starphire glass; Magnetic Starphire Glass: Mirror; Flat Polish all edges; 6.0mm
M11	THRM	Thermofoil Grade 2; DIRTT SSI Thermofoil Canadian Grey Super Matte (Horizontal)
M12	GLS	Grade 1 (Non-metallic) Backpaint; Starphire Glass: Rich Black DG57; Flat Polish all edges; 6.0mm
M13	GLS	Stick Built Tempered Glass Tile; 10mm Tempered Glass - Clear; Flat Polish all edges; 10.0mm
M14	PWD	Yello PC; Custom Powder Coat
M15	MCF_Graphic	Custom Image; Honeycombe graphic - Gloss; Custom Image
M16	GLS	Back Painted Glass - Custom Color; Custom yellow bpg; Back Painted Glass Custom Color (Color Name); Flat Polish All Edges; Flat Polish all edges; 6.0mm
M17	PNT	DIRTT ChromacoatPlus Grade 1; ChromacoatPlus - Slate DC86; UC-50027
M18	MCF	WriteAway: Buttercup Gloss; .022mm CRS - Porcelain coated white laminate
M19	MCF	WriteAway: Buttercup Gloss
M20	THRM	Thermofoil Grade 1; DIRTT SSI Thermofoil Black
M21	FAB	DIRTT Fabric G10 Glint; Glint Gobi; .022mm CRS - Porcelain coated white laminate
M22	FAB	DIRTT Fabric G10 Glint; Glint Gobi (Railroaded); .022mm CRS - Porcelain coated white laminate

DIRTT

PROJECT DETAILS/NOTES:

FRAME AND TRIM DETAILS

EXTRUSION PROFILE / WALL TYPE:
- [ ] CURVILINEAR
- [x] RECTILINEAR
- [ ] BLADE
- [ ] EVIL TWIN
- [ ] INSPIRE

FRAME FINISH:
- [x] ANODIZED ALUMINUM
- [ ] POWDER-COATED
- [ ] VENEER

BASE TRIM COLOR:
- [x] SILVER
- [ ] BLACK

PVC/GLASS WIPE COLOR:
- [x] SILVER
- [ ] BLACK

REVEAL:
- [x] CLASSIC
- [ ] ENZO

COPLANAR:
- [x] NO
- [ ] YES

FLOOR, CEILING, AND SEISMIC DETAILS

FLOOR TYPE:
- [x] CARPET
- [ ] HARD SURFACE

WALL HEIGHT: 10'-0"
LOW WALL: 4'-0"
WEIGHT ROOM 20'-0"

CEILING TYPE:
- [ ] DRYWALL BULKHEAD
- [ ] CORNICE RAIL
- [ ] LOW WALL
- [x] GRID

GRID TYPE:
- [ ] 9/16"
- [x] 15/16"

TILE TYPE:
- [x] FLUSH
- [ ] CONCEALED
- [ ] TEGULAR

SEISMIC REQUIRED:
- [x] NO
- [ ] YES

HARDWARE REQUIREMENTS:

DOORS:
REFERENCE DOOR SCHEDULE FOR FURTHER DETAILS

ELECTRICAL PROVISION REQUIRED - SEE ELECTRICAL SHOP DRAWINGS

DATA PROVISION REQUIRED - SEE PON SHOP DRAWINGS

CASEWORK PROVISIONS REQUIRED - SEE CASEWORK SHOP DRAWINGS

ADDITIONAL NOTES:

DRAWING INDEX

DW-100.1-100.3	LEVEL 1 FLOOR PLANS
DW-100.4-100.6	LEVEL 2 FLOOR PLANS
DW-100.7-100.8	HIGHLIGHTED DIRTT SCOPE
DW-200.1-200.7	LEVEL 1 ELEVATIONS
DW-200.8-200.15	LEVEL 2 ELEVATIONS
DW-300.1	LEVEL 1 INTERSECTION DETAILS LEVEL 1 DOOR SCHEDULE
DW-300.2	LEVEL 2 INTERSECTION DETAILS LEVEL 2 DOOR SCHEDULE
DW-400.1-400.2	TYPICAL DIRTT DETAILS
DW-500.1-500.4	CEILING AND FLOOR AND EFFICIENCIES

Project Name:
GALENA PARK HIGH SCHOOL
FIELD HOUSE
LEVEL 1

Project Address:
1000 KEENE ST
GALENA PARK, TX
77547

DIRTT
CONSULTANT
SET

Project:	148501
Drawn by:	KA
Scale:	AS NOTED
Plot Date:	2025/06/10
Contact:	HEATHER KENNEY
Contact Number:	346-465-4114

ELEVATIONS
FIRST FLOOR

DW-200.5

This drawing is the confidential and proprietary information of DIRTT Environmental Solutions Ltd. (DIRTT). Any reproduction, alteration, disclosure or use of this drawing other than as agreed to by DIRTT is expressly prohibited. Do not use drawing for cute purposes. All dce dimensions, drawings, details, and specifications contained herein must be verified by sub-contractors and any discrepancies must be reported to DIRTT in writing before proceeding with work. See cover page of drawing package for full disclaimer.

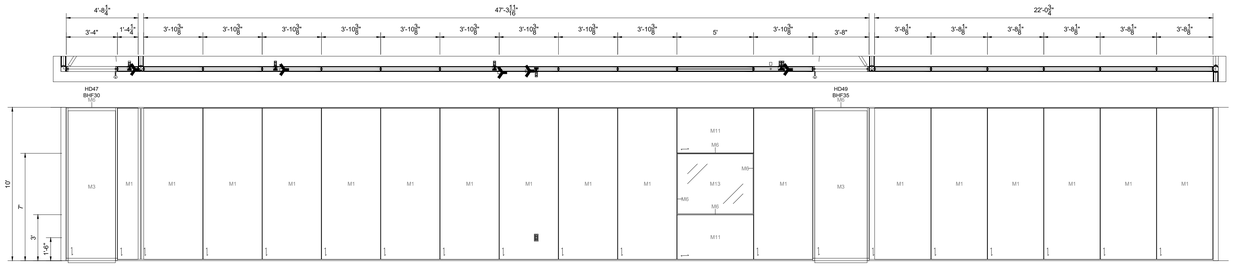

Elevation EO

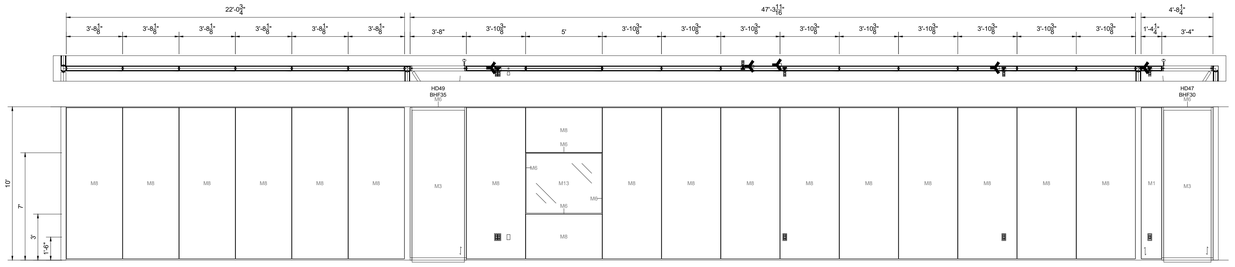

Elevation EP

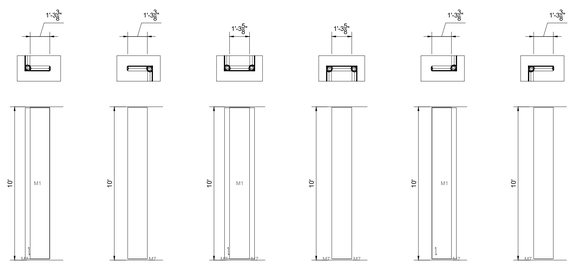

Elevation EQ Elevation ER Elevation ES Elevation ET Elevation EU Elevation EV

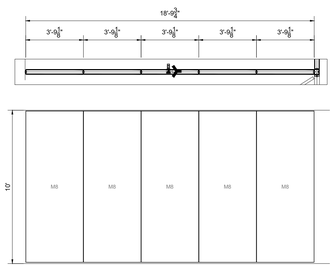

Elevation EW

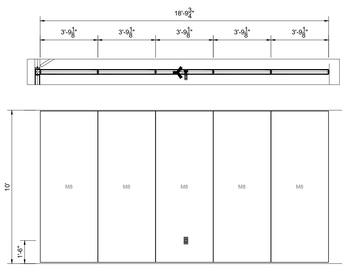

Elevation EX

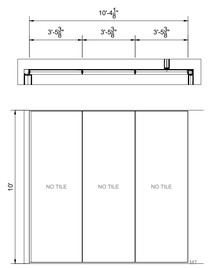

Elevation EY

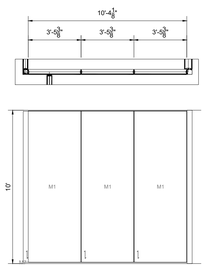

Elevation EZ

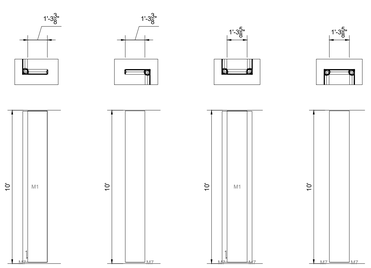

Elevation FA Elevation FB Elevation FC Elevation FD

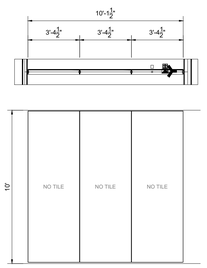

Elevation FE

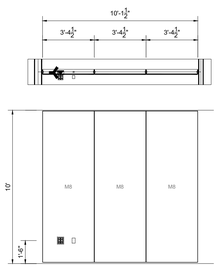

Elevation FF

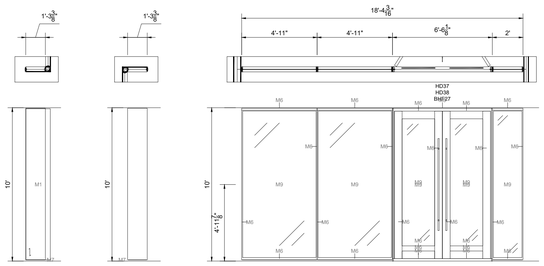

Elevation FG Elevation FH Elevation FI

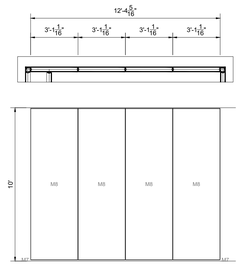

Elevation FJ

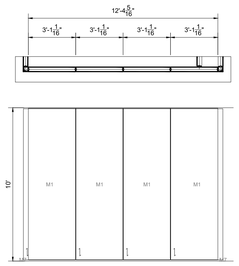

Elevation FK

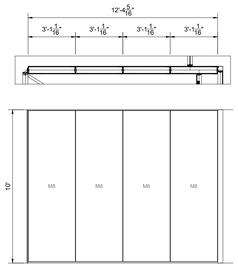

Elevation FL

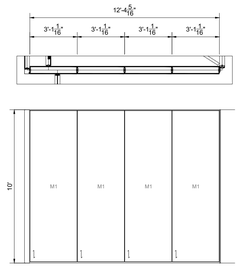

Elevation FM

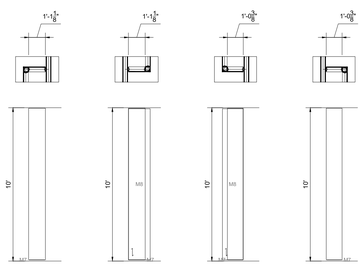

Elevation FN Elevation FO Elevation FP Elevation FQ

1 ELEVATIONS
DW-200.6

1/4" = 1'0" / 1:48.000002

DIRTT Walls Finish Schedule		
Tag	Finish	Specification
M1	THRM	Thermofoil Grade 2; DIRTT SSI Thermofoil Canadian Grey Super Matte
M3	THRM	Thermofoil Grade 3; DIRTT OMNOVA Thermofoil Arturo Candlelight
M4	THRM	Thermofoil Grade 1; DIRTT SSI Thermofoil Snow White
M6	ANO	Grade 1 Anodized; Anodized Finish - Clear
M7	PWD	DIRTT Powder Coated Grade 2; Powder Coat - Shimmer DPM50 (Metallic)
M8	PNT	DIRTT ChromacoatPlus Grade 1; ChromacoatPlus - Fog DC82; UC-50022
M9	GLS	Center Mounted Tempered Glass Tile; 6mm Tempered Glass - Clear; No Edge Polish; 6.0mm
M10	GLS	Mirror - Magnetic 6mm Starphire glass; Magnetic Starphire Glass: Mirror; Flat Polish all edges; 6.0mm
M11	THRM	Thermofoil Grade 2; DIRTT SSI Thermofoil Canadian Grey Super Matte (Horizontal)
M12	GLS	Grade 1 (Non-metallic) Backpaint; Starphire Glass: Rich Black DG57; Flat Polish all edges; 6.0mm
M13	GLS	Stick Built Tempered Glass Tile; 10mm Tempered Glass - Clear; Flat Polish all edges; 10.0mm
M14	PWD	Yello PC; Custom Powder Coat
M15	MCF_Graphic	Custom Image; Honeycombe graphic - Gloss; Custom Image
M16	GLS	Back Painted Glass - Custom Color; Custom yellow bpg; Back Painted Glass Custom Color (Color Name); Flat Polish All Edges; Flat Polish all edges; 6.0mm
M17	PNT	DIRTT ChromacoatPlus Grade 1; ChromacoatPlus - Slate DC86; UC-50027
M18	MCF	WriteAway: Buttercup Gloss; .022mm CRS - Porcelain coated white laminate
M19	MCF	WriteAway: Buttercup Gloss
M20	THRM	Thermofoil Grade 1; DIRTT SSI Thermofoil Black
M21	FAB	DIRTT Fabric G10 Glint; Glint Gobi; .022mm CRS - Porcelain coated white laminate
M22	FAB	DIRTT Fabric G10 Glint; Glint Gobi (Railroaded); .022mm CRS - Porcelain coated white laminate

DIRTT™

PROJECT DETAILS/NOTES:

FRAME AND TRIM DETAILS

EXTRUSION PROFILE / WALL TYPE:
- ☐ CURVILINEAR
- ☑ RECTILINEAR
- ☐ BLADE
- ☐ EVIL TWIN
- ☐ INSPIRE

FRAME FINISH:
- ☑ ANODIZED ALUMINUM
- ☐ POWDER-COATED
- ☐ VENEER

BASE TRIM COLOR:
- ☑ SILVER
- ☐ BLACK

PVC/GLASS WIPE COLOR:
- ☑ SILVER
- ☐ BLACK

REVEAL:
- ☑ CLASSIC
- ☐ ENZO

COPLANAR:
- ☑ NO
- ☐ YES

FLOOR, CEILING, AND SEISMIC DETAILS

FLOOR TYPE:
- ☑ CARPET
- ☐ HARD SURFACE

WALL HEIGHT: 10'-0"
LOW WALL: 4'-0"
WEIGHT ROOM 20'-0"

CEILING TYPE:
- ☐ DRYWALL BULKHEAD
- ☐ CORNICE RAIL
- ☐ LOW WALL
- ☑ GRID

GRID TYPE:
- ☐ 9/16"
- ☑ 15/16"

TILE TYPE:
- ☑ FLUSH
- ☐ CONCEALED
- ☐ TEGULAR

SEISMIC REQUIRED:
- ☑ NO
- ☐ YES

HARDWARE REQUIREMENTS:

DOORS:
REFERENCE DOOR SCHEDULE FOR FURTHER DETAILS

ELECTRICAL PROVISION REQUIRED - SEE ELECTRICAL SHOP DRAWINGS

DATA PROVISION REQUIRED - SEE PON SHOP DRAWINGS

CASEWORK PROVISIONS REQUIRED - SEE CASEWORK SHOP DRAWINGS

ADDITIONAL NOTES:

DRAWING INDEX

DW-100.1-100.3	LEVEL 1 FLOOR PLANS
DW-100.4-100.6	LEVEL 2 FLOOR PLANS
DW-100.7-100.8	HIGHLIGHTED DIRTT SCOPE
DW-200.1-200.7	LEVEL 1 ELEVATIONS
DW-200.8-200.15	LEVEL 2 ELEVATIONS
DW-300.1	LEVEL 1 INTERSECTION DETAILS LEVEL 1 DOOR SCHEDULE
DW-300.2	LEVEL 2 INTERSECTION DETAILS LEVEL 2 DOOR SCHEDULE
DW-400.1-400.2	TYPICAL DIRTT DETAILS
DW-500.1-500.4	CEILING AND FLOOR AND EFFICIENCIES

Project Name:

GALENA PARK HIGH SCHOOL
FIELD HOUSE
LEVEL 1

Project Address:

1000 KEENE ST
GALENA PARK, TX
77547

DIRTT
CONSULTANT
SET

Project:	148501
Drawn by:	KA
Scale:	AS NOTED
Plot Date:	2025/06/10
Contact:	HEATHER KENNEY
Contact Number:	346-465-4114

ELEVATIONS
FIRST FLOOR

DW-200.6

This drawing is the confidential and proprietary information of DIRTT Environmental Solutions Ltd. (DIRTT). Any reproduction, alteration, disclosure or use of this drawing other than as agreed to by DIRTT is expressly prohibited. Do not use drawing for cutting purposes. All site dimensions, drawings, details, and specifications contained herein must be verified by sub-contractors and any discrepancies must be reported to DIRTT in writing before proceeding with work. See cover page of drawing package for full disclaimer.

C:\Users\SWILLI~1\AppData\Local\Temp\ICEcad-b590f7d8-0cc1-4e45-80ff-df251e13a6c8\ICEcad.dwg 2025-6-10 12:38:30 PM

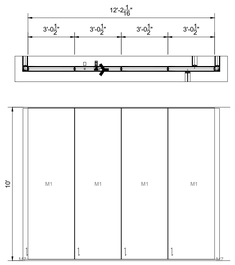

Elevation FR

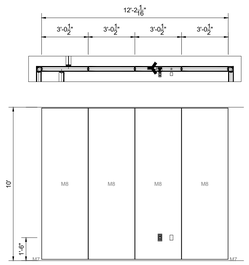

Elevation FS

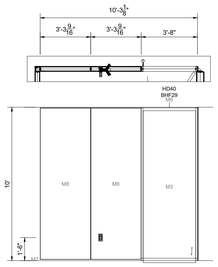

Elevation FT

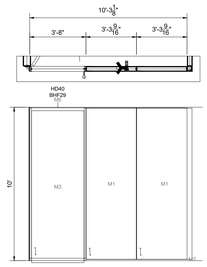

Elevation FU

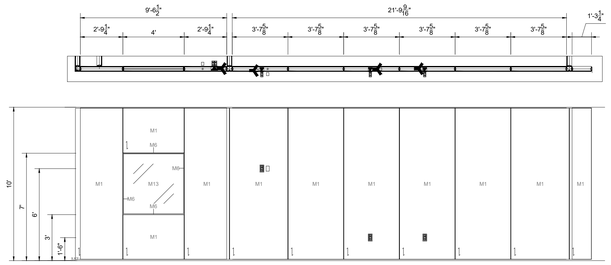

Elevation FV

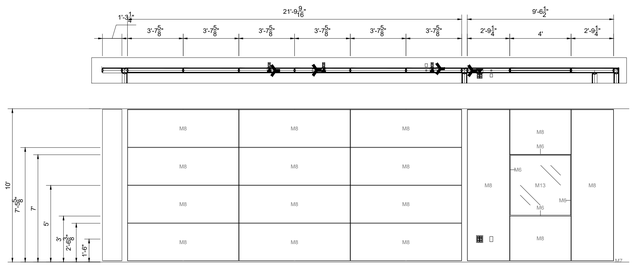

Elevation FW

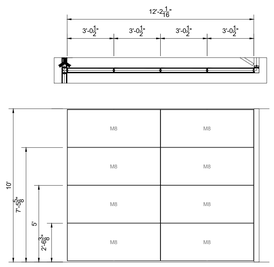

Elevation FX

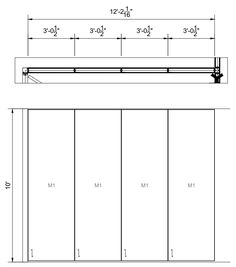

Elevation FY

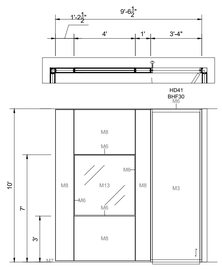

Elevation FZ

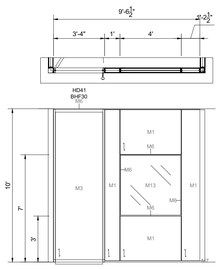

Elevation GA

Elevation GB

Elevation GC

Elevation GD

Elevation GE

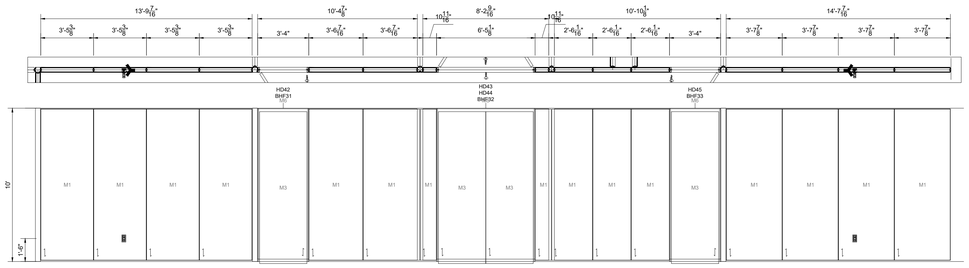

Elevation GF

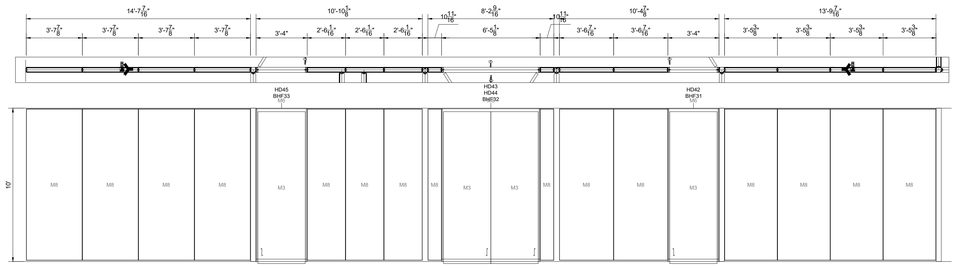

Elevation GG

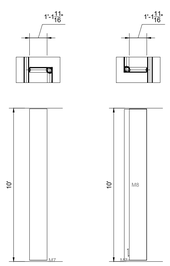

Elevation GH

Elevation GI

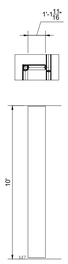

Elevation GJ

Elevation GK

Elevation GL

Elevation GM

1 ELEVATIONS
DW-200.7

1/4" = 1'0" / 1:48.000002

DIRTT Walls Finish Schedule		
Tag	Finish	Specification
M1	THRM	Thermofoil Grade 2; DIRTT SSI Thermofoil Canadian Grey Super Matte
M3	THRM	Thermofoil Grade 3; DIRTT OMNOVA Thermofoil Arturo Candlelight
M4	THRM	Thermofoil Grade 1; DIRTT SSI Thermofoil Snow White
M6	ANO	Grade 1 Anodized; Anodized Finish - Clear
M7	PWD	DIRTT Powder Coated Grade 2; Powder Coat - Shimmer DPM50 (Metallic)
M8	PNT	DIRTT ChromacoatPlus Grade 1; ChromacoatPlus - Fog DC82; UC-50022
M9	GLS	Center Mounted Tempered Glass Tile; 6mm Tempered Glass - Clear; No Edge Polish; 6.0mm
M10	GLS	Mirror - Magnetic 6mm Starphire glass; Magnetic Starphire Glass: Mirror; Flat Polish all edges; 6.0mm
M11	THRM	Thermofoil Grade 2; DIRTT SSI Thermofoil Canadian Grey Super Matte (Horizontal)
M12	GLS	Grade 1 (Non-metallic) Backpaint; Starphire Glass: Rich Black DG57; Flat Polish all edges; 6.0mm
M13	GLS	Stick Built Tempered Glass Tile; 10mm Tempered Glass - Clear; Flat Polish all edges; 10.0mm
M14	PWD	Yello PC; Custom Powder Coat
M15	MCF_Graphic	Custom Image; Honeycombe graphic - Gloss; Custom Image
M16	GLS	Back Painted Glass - Custom Color; Custom yellow bpg; Back Painted Glass Custom Color (Color Name); Flat Polish All Edges; Flat Polish all edges; 6.0mm
M17	PNT	DIRTT ChromacoatPlus Grade 1; ChromacoatPlus - Slate DC86; UC-50027
M18	MCF	WriteAway: Buttercup Gloss; .022mm CRS - Porcelain coated white laminate
M19	MCF	WriteAway: Buttercup Gloss
M20	THRM	Thermofoil Grade 1; DIRTT SSI Thermofoil Black
M21	FAB	DIRTT Fabric G10 Glint; Glint Gobi; .022mm CRS - Porcelain coated white laminate
M22	FAB	DIRTT Fabric G10 Glint; Glint Gobi (Railroaded); .022mm CRS - Porcelain coated white laminate

DIRTT

PROJECT DETAILS/NOTES:

FRAME AND TRIM DETAILS

EXTRUSION PROFILE / WALL TYPE:
- [ ] CURVILINEAR
- [x] RECTILINEAR
- [ ] BLADE
- [ ] EVIL TWIN
- [ ] INSPIRE

FRAME FINISH:
- [x] ANODIZED ALUMINUM
- [ ] POWDER-COATED
- [ ] VENEER

BASE TRIM COLOR:
- [x] SILVER
- [ ] BLACK

PVC/GLASS WIPE COLOR:
- [x] SILVER
- [ ] BLACK

REVEAL:
- [x] CLASSIC
- [ ] ENZO

COPLANAR:
- [x] NO
- [ ] YES

FLOOR, CEILING, AND SEISMIC DETAILS

FLOOR TYPE:
- [x] CARPET
- [ ] HARD SURFACE

WALL HEIGHT: 10'-0"
LOW WALL: 4'-0"
WEIGHT ROOM 25'-0"

CEILING TYPE:
- [ ] DRYWALL BULKHEAD
- [ ] CORNICE RAIL
- [ ] LOW WALL
- [x] GRID

GRID TYPE:
- [ ] 9/16"
- [x] 15/16"

TILE TYPE:
- [x] FLUSH
- [ ] CONCEALED
- [ ] TEGULAR

SEISMIC REQUIRED:
- [x] NO
- [ ] YES

HARDWARE REQUIREMENTS:

DOORS:
REFERENCE DOOR SCHEDULE FOR FURTHER DETAILS

ELECTRICAL PROVISION REQUIRED - SEE ELECTRICAL SHOP DRAWINGS

DATA PROVISION REQUIRED - SEE PON SHOP DRAWINGS

CASEWORK PROVISIONS REQUIRED - SEE CASEWORK SHOP DRAWINGS

ADDITIONAL NOTES:

DRAWING INDEX

DW-100.1-100.3	LEVEL 1 FLOOR PLANS
DW-100.4-100.6	LEVEL 2 FLOOR PLANS
DW-100.7-100.8	HIGHLIGHTED DIRTT SCOPE
DW-200.1-200.7	LEVEL 1 ELEVATIONS
DW-200.8-200.15	LEVEL 2 ELEVATIONS
DW-300.1	LEVEL 1 INTERSECTION DETAILS LEVEL 1 DOOR SCHEDULE
DW-300.2	LEVEL 2 INTERSECTION DETAILS LEVEL 2 DOOR SCHEDULE
DW-400.1-400.2	TYPICAL DIRTT DETAILS
DW-500.1-500.4	CEILING AND FLOOR AND EFFICIENCIES

Project Name:

GALENA PARK HIGH SCHOOL
FIELD HOUSE
LEVEL 1

Project Address:

1000 KEENE ST
GALENA PARK, TX
77547

DIRTT
CONSULTANT
SET

Project:	148501
Drawn by:	KA
Scale:	AS NOTED
Plot Date:	2025/06/10
Contact:	HEATHER KENNEY
Contact Number:	346-465-4114

ELEVATIONS
FIRST FLOOR

DW-200.7

This drawing is the confidential and proprietary information of DIRTT Environmental Solutions Ltd. (DIRTT). Any reproduction, alteration, disclosure or use of this drawing other than as agreed to by DIRTT is expressly prohibited. Do not use drawing for scale purposes. All dist dimensions, drawings, details, and specifications contained herein must be verified by sub-contractors and any discrepancies must be reported to DIRTT in writing before proceeding with work. See cover page of drawing package for full disclaimer.

C:\Users\SWILLI~1\AppData\Local\Temp\ICEcad-b590f7d8-0cc1-4e45-80ff-df251e13a6c8\ICEcad.dwg 2025-6-10 12:38:40 PM

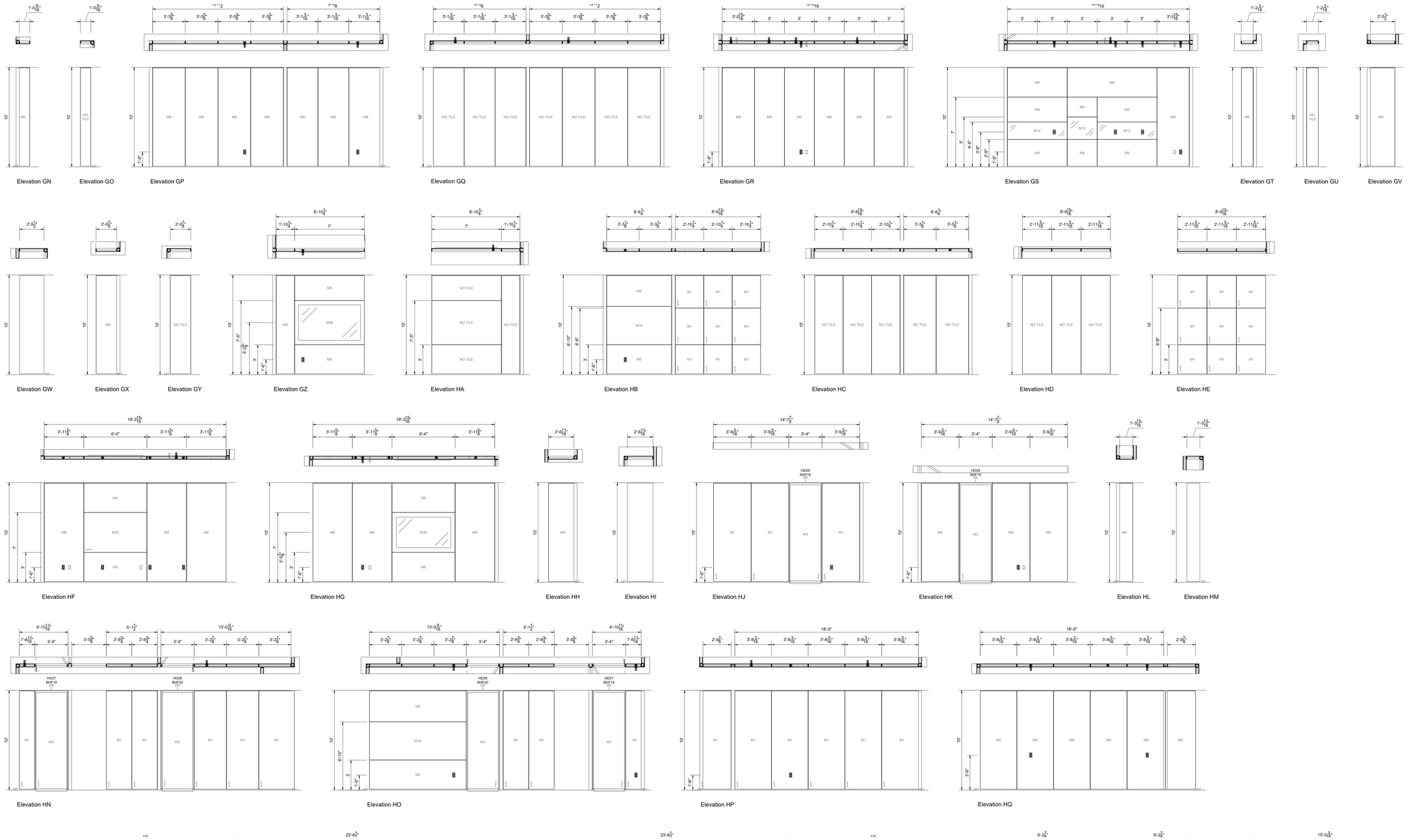

1 ELEVATIONS
DW-200.8

1/4" = 1'-0" / 1:48.000002

DIRTT Walls Finish Schedule		
Tag	Finish	Specification
M1	THRM	Thermofoil Grade 2; DIRTT SSI Thermofoil Canadian Grey Super Matte
M3	THRM	Thermofoil Grade 3; DIRTT OMNOVA Thermofoil Arturo Candlelight
M6	ANO	Grade 1 Anodized; Anodized Finish - Clear
M7	PWD	DIRTT Powder Coated Grade 2; Powder Coat - Shimmer DPM50 (Metallic)
M8	PNT	DIRTT ChromacoatPlus Grade 1; ChromacoatPlus - Fog DC82; UC-50022
M9	GLS	Center Mounted Tempered Glass Tile; 6mm Tempered Glass - Clear; No Edge Polish; 6.0mm
M11	THRM	Thermofoil Grade 2; DIRTT SSI Thermofoil Canadian Grey Super Matte (Horizontal)
M12	GLS	Grade 1 (Non-metallic) Backpaint; Clear Glass: Rich Black DG56; Flat Polish all edges; 6.0mm
M14	PWD	Yellow PC; Custom Powder Coat
M15	GLS_Graphic	Starphire Glass; Custom Image; Honeycomb; Custom Image; Flat Polish all edges;6.0mm
M18	MCF	WriteAway: Buttercup Gloss; .022mm CRS - Porcelain coated white laminate
M22	FAB	DIRTT Fabric G10 Glint; Glint Gobi (Railroaded); .022mm CRS - Porcelain coated white laminate
M33	PNT	DIRTT ChromacoatPlus Grade 1; ChromacoatPlus - Black DC63; UC-50004
M36	GLS	Grade 1 (Non-metallic) Backpaint; Clear Glass: Shimmer DG50; Flat Polish all edges; 6.0mm
M37	MCF	WriteAway: Emerald Green Gloss; .022mm CRS - Porcelain coated white laminate
M38	PNT	DIRTT ChromacoatPlus Grade 1; ChromacoatPlus - Polar White DC60; UC-50001
M41	PNT	DIRTT ChromacoatPlus Grade 1; ChromacoatPlus - To Be Determined
M50	PWD	DIRTT Powder Coated Standard; Powder Coat - Black DP13 (Textured)

DIRTT™

PROJECT DETAILS/NOTES:

FRAME AND TRIM DETAILS

EXTRUSION PROFILE / WALL TYPE:
- ☐ CURVILINEAR
- ☑ RECTILINEAR
- ☐ BLADE
- ☐ EVIL TWIN
- ☐ INSPIRE

FRAME FINISH:
- ☑ ANODIZED ALUMINUM
- ☐ POWDER-COATED
- ☐ VENEER

BASE TRIM COLOR:
- ☑ SILVER
- ☐ BLACK

PVC/GLASS WIPE COLOR:
- ☑ SILVER
- ☐ BLACK

REVEAL:
- ☑ CLASSIC
- ☐ ENZO

COPLANAR:
- ☑ NO
- ☐ YES

FLOOR, CEILING, AND SEISMIC DETAILS

FLOOR TYPE:
- ☑ CARPET
- ☐ HARD SURFACE

WALL HEIGHT: 10'-0"
WEIGHT ROOM: 25'-0"

CEILING TYPE:
- ☐ DRYWALL BULKHEAD
- ☐ CORNICE RAIL
- ☐ LOW WALL
- ☑ GRID

GRID TYPE:
- ☐ 9/16"
- ☑ 15/16"

TILE TYPE:
- ☑ FLUSH
- ☐ CONCEALED
- ☐ TEGULAR

SEISMIC REQUIRED:
- ☑ NO
- ☐ YES

HARDWARE REQUIREMENTS:

DOORS:
REFERENCE DOOR SCHEDULE FOR FURTHER DETAILS

ELECTRICAL PROVISION REQUIRED - SEE ELECTRICAL SHOP DRAWINGS

DATA PROVISION REQUIRED - SEE PON SHOP DRAWINGS

CASEWORK PROVISIONS REQUIRED - SEE CASEWORK SHOP DRAWINGS

ADDITIONAL NOTES:

DRAWING INDEX

DW-100.1-100.3	LEVEL 1 FLOOR PLANS
DW-100.4-100.6	LEVEL 2 FLOOR PLANS
DW-100.7-100.8	HIGHLIGHTED DIRTT SCOPE
DW-200.1-200.7	LEVEL 1 ELEVATIONS
DW-200.8-200.15	LEVEL 2 ELEVATIONS
DW-300.1	LEVEL 1 INTERSECTION DETAILS LEVEL 1 DOOR SCHEDULE
DW-300.2	LEVEL 2 INTERSECTION DETAILS LEVEL 2 DOOR SCHEDULE
DW-400.1-400.2	TYPICAL DIRTT DETAILS
DW-500.1-500.4	CEILING AND FLOOR EFFICIENCIES

Project Name:

GALENA PARK HIGH SCHOOL
FIELD HOUSE
LEVEL 2

Project Address:

1000 KEENE ST
GALENA PARK, TX
77547

DIRTT CONSULTANT SET

Rev	Date	Revision	Initial
-	04JUN25	95% CDS	KA
1	09JUN25	95% CDS (Rev 1)	KA
2	10JUN25	95% CDS (Rev 2)	KA

Project:	148501
Drawn by:	KA
Scale:	AS NOTED
Plot Date:	2025/06/10
Contact:	HEATHER KENNEY
Contact Number:	346-465-4114

ELEVATIONS
SECOND FLOOR

DW-200.8

This drawing is the confidential and proprietary information of DIRTT Environmental Solutions Ltd. (DIRTT). Any reproduction, alteration, disclosure or use of this drawing other than as agreed to by DIRTT is expressly prohibited. Do not use drawing for scale purposes. All dire dimensions, drawings, details, and specifications contained herein must be verified by sub-contractors and any discrepancies must be reported to DIRTT in writing before proceeding with work. See cover page of drawing package for full disclaimer.

C:\Users\SWILLI~1\AppData\Local\Temp\CEcad-fb9ac0e7-7db4-4050-b194-d2e248d8a0f2\CEcad.dwg 2025-6-10 1:37:26 PM

This drawing is the confidential and proprietary information of DIRTT Environmental Solutions Ltd. (DIRTT). Any reproduction, alteration, disclosure or use of this drawing other than as agreed to by DIRTT is expressly prohibited. Do not use drawings for scale purposes. All site dimensions, drawings, details, and specifications contained herein must be verified by sub-contractors and any discrepancies must be reported to DIRTT in writing before proceeding with work. See cover page of drawing package for full disclaimer.

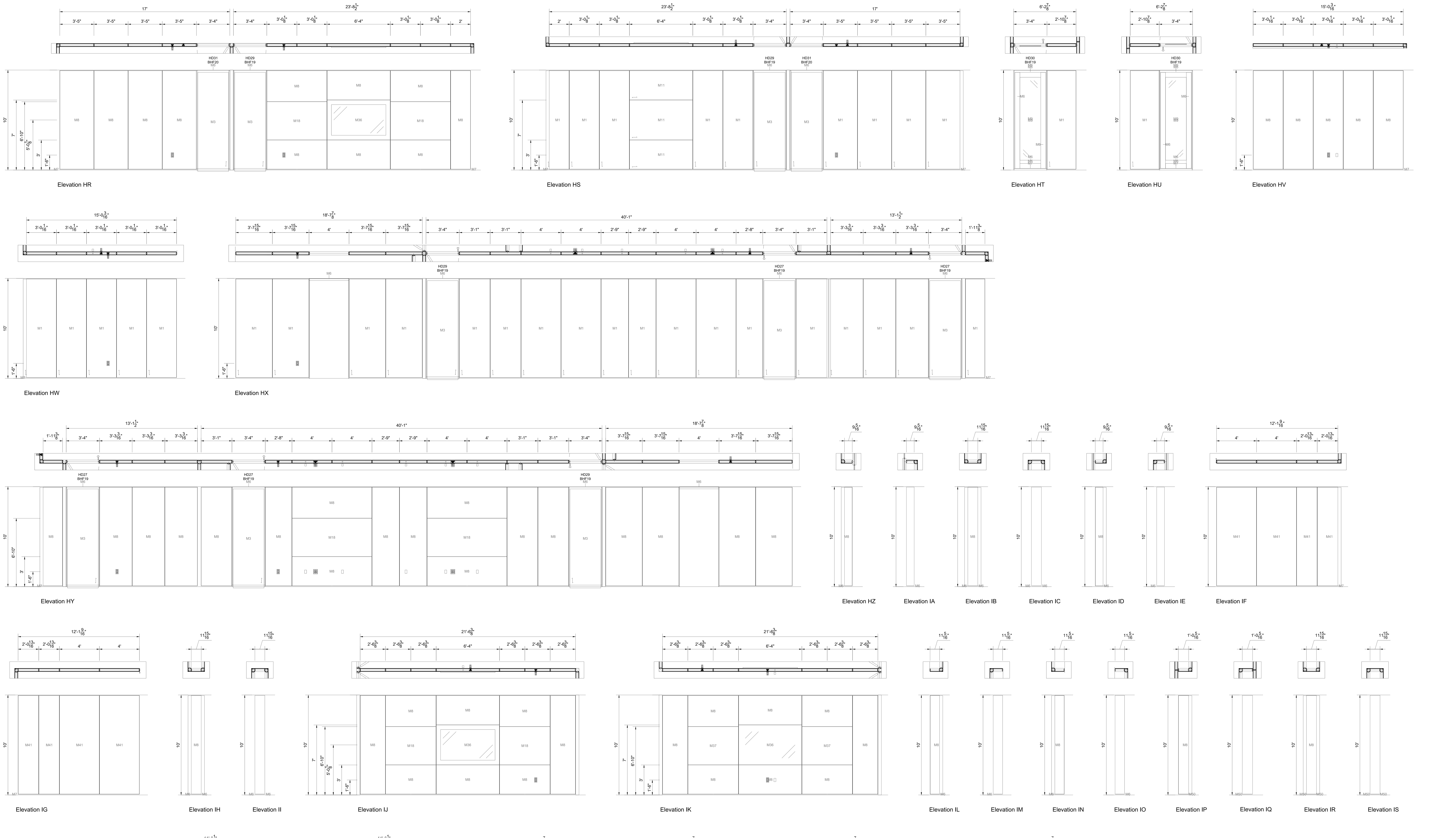

1 ELEVATIONS
DW-200.9

1/4" = 1'-0" / 1:48.000001

DIRTT Walls Finish Schedule

Tag	Finish	Specification
M1	THRM	Thermofoil Grade 2; DIRTT SSI Thermofoil Canadian Grey Super Matte
M3	THRM	Thermofoil Grade 3; DIRTT OMNOVA Thermofoil Arturo Candlelight
M6	ANO	Grade 1 Anodized; Anodized Finish - Clear
M7	PWD	DIRTT Powder Coated Grade 2; Powder Coat - Shimmer DPM50 (Metallic)
M8	PNT	DIRTT ChromacoatPlus Grade 1; ChromacoatPlus - Fog DC82; UC-50022
M9	GLS	Center Mounted Tempered Glass Tile; 6mm Tempered Glass - Clear; No Edge Polish; 6.0mm
M11	THRM	Thermofoil Grade 2; DIRTT SSI Thermofoil Canadian Grey Super Matte (Horizontal)
M12	GLS	Grade 1 (Non-metallic) Backpaint; Clear Glass: Rich Black DG56; Flat Polish all edges; 6.0mm
M14	PWD	Yellow PC; Custom Powder Coat
M15	GLS_Graphic	Starphire Glass; Custom Image; Honeycomb; Custom Image; Flat Polish all edges;6.0mm
M18	MCF	WriteAway: Buttercup Gloss; .022mm CRS - Porcelain coated white laminate
M22	FAB	DIRTT Fabric G10 Glint; Glint Gobi (Railroaded); .022mm CRS - Porcelain coated white laminate
M33	PNT	DIRTT ChromacoatPlus Grade 1; ChromacoatPlus - Black DC63; UC-50004
M36	GLS	Grade 1 (Non-metallic) Backpaint; Clear Glass: Shimmer DG50; Flat Polish all edges; 6.0mm
M37	MCF	WriteAway: Emerald Green Gloss; .022mm CRS - Porcelain coated white laminate
M38	PNT	DIRTT ChromacoatPlus Grade 1; ChromacoatPlus - Polar White DC60; UC-50001
M41	PNT	DIRTT ChromacoatPlus Grade 1; ChromacoatPlus - To Be Determined
M50	PWD	DIRTT Powder Coated Standard; Powder Coat - Black DP13 (Textured)

DIRTT

PROJECT DETAILS/NOTES:

FRAME AND TRIM DETAILS

EXTRUSION PROFILE / WALL TYPE:
- ☐ CURVILINEAR
- ☑ RECTILINEAR
- ☐ BLADE
- ☐ EVIL TWIN
- ☐ INSPIRE

FRAME FINISH:
- ☑ ANODIZED ALUMINUM
- ☐ POWDER-COATED
- ☐ VENEER

BASE TRIM COLOR:
- ☑ SILVER
- ☐ BLACK

PVC/GLASS WIPE COLOR:
- ☑ SILVER
- ☐ BLACK

REVEAL:
- ☑ CLASSIC
- ☐ ENZO

COPLANAR:
- ☑ NO
- ☐ YES

FLOOR, CEILING, AND SEISMIC DETAILS

FLOOR TYPE:
- ☑ CARPET
- ☐ HARD SURFACE

WALL HEIGHT: 10'-0"
WEIGHT ROOM: 25'-0"

CEILING TYPE:
- ☐ DRYWALL BULKHEAD
- ☐ CORNICE RAIL
- ☐ LOW WALL
- ☑ GRID

GRID TYPE:
- ☐ 9/16"
- ☑ 15/16"

TILE TYPE:
- ☑ FLUSH
- ☐ CONCEALED
- ☐ TEGULAR

SEISMIC REQUIRED:
- ☑ NO
- ☐ YES

HARDWARE REQUIREMENTS:

DOORS:
REFERENCE DOOR SCHEDULE FOR FURTHER DETAILS

ELECTRICAL PROVISION REQUIRED - SEE ELECTRICAL SHOP DRAWINGS

DATA PROVISION REQUIRED - SEE PON SHOP DRAWINGS

CASEWORK PROVISIONS REQUIRED - SEE CASEWORK SHOP DRAWINGS

ADDITIONAL NOTES:

DRAWING INDEX

DW-100.1-100.3	LEVEL 1 FLOOR PLANS
DW-100.4-100.6	LEVEL 2 FLOOR PLANS
DW-100.7-100.8	HIGHLIGHTED DIRTT SCOPE
DW-200.1-200.7	LEVEL 1 ELEVATIONS
DW-200.8-200.15	LEVEL 2 ELEVATIONS
DW-300.1	LEVEL 1 INTERSECTION DETAILS LEVEL 1 DOOR SCHEDULE
DW-300.2	LEVEL 2 INTERSECTION DETAILS LEVEL 2 DOOR SCHEDULE
DW-400.1-400.2	TYPICAL DIRTT DETAILS
DW-500.1-500.4	CEILING AND FLOOR EFFICIENCIES

Project Name:
GALENA PARK HIGH SCHOOL
FIELD HOUSE
LEVEL 2

Project Address:
1000 KEENE ST
GALENA PARK, TX
77547

DIRTT CONSULTANT SET

Rev	Date	Revision	Initial
-	04JUN25	95% CDS	KA
1	09JUN25	95% CDS (Rev 1)	KA
2	10JUN25	95% CDS (Rev 2)	KA

Project: 148501
Drawn by: KA
Scale: AS NOTED
Plot Date: 2025/06/10
Contact: HEATHER KENNEY
Contact Number: 346-465-4114

ELEVATIONS
SECOND FLOOR

DW-200.9

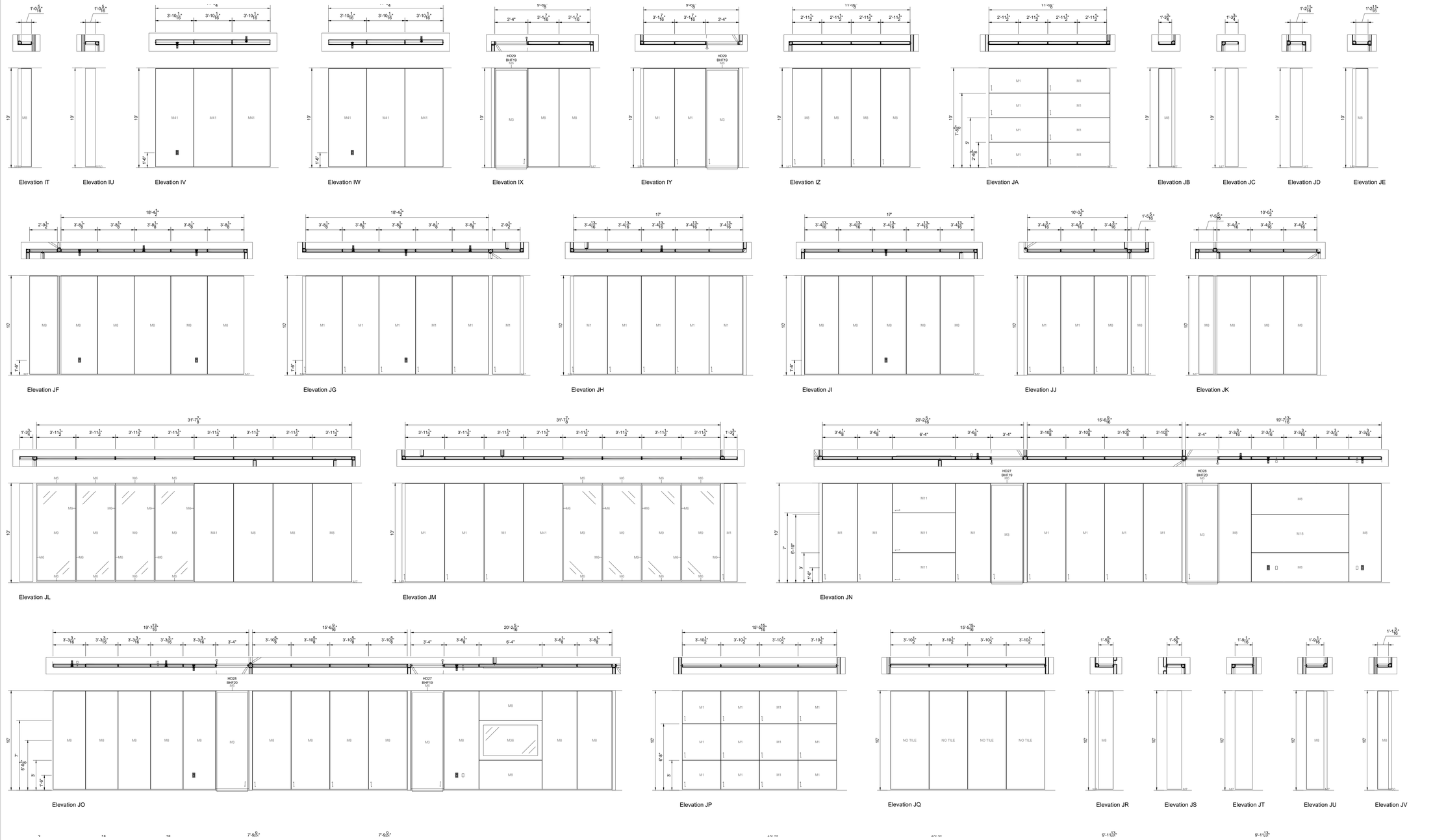

1 ELEVATIONS
DW-200.10

1/4" = 1'-0" / 1:48.000004

DIRTT Walls Finish Schedule		
Tag	Finish	Specification
M1	THRM	Thermofoil Grade 2; DIRTT SSI Thermofoil Canadian Grey Super Matte
M3	THRM	Thermofoil Grade 3; DIRTT OMNOVA Thermofoil Arturo Candlelight
M6	ANO	Grade 1 Anodized; Anodized Finish - Clear
M7	PWD	DIRTT Powder Coated Grade 2; Powder Coat - Shimmer DPM50 (Metallic)
M8	PNT	DIRTT ChromacoatPlus Grade 1; ChromacoatPlus - Fog DC82; UC-50022
M9	GLS	Center Mounted Tempered Glass Tile; 6mm Tempered Glass - Clear; No Edge Polish; 6.0mm
M11	THRM	Thermofoil Grade 2; DIRTT SSI Thermofoil Canadian Grey Super Matte (Horizontal)
M12	GLS	Grade 1 (Non-metallic) Backpaint; Clear Glass: Rich Black DG56; Flat Polish all edges; 6.0mm
M14	PWD	Yellow PC; Custom Powder Coat
M15	GLS_Graphic	Starphire Glass; Custom Image; Honeycomb; Custom Image; Flat Polish all edges;6.0mm
M18	MCF	WriteAway: Buttercup Gloss; .022mm CRS - Porcelain coated white laminate
M22	FAB	DIRTT Fabric G10 Glint; Glint Gobi (Railroaded); .022mm CRS - Porcelain coated white laminate
M33	PNT	DIRTT ChromacoatPlus Grade 1; ChromacoatPlus - Black DC63; UC-50004
M36	GLS	Grade 1 (Non-metallic) Backpaint; Clear Glass: Shimmer DG50; Flat Polish all edges; 6.0mm
M37	MCF	WriteAway: Emerald Green Gloss; .022mm CRS - Porcelain coated white laminate
M38	PNT	DIRTT ChromacoatPlus Grade 1; ChromacoatPlus - Polar White DC60; UC-50001
M41	PNT	DIRTT ChromacoatPlus Grade 1; ChromacoatPlus - To Be Determined
M50	PWD	DIRTT Powder Coated Standard; Powder Coat - Black DP13 (Textured)

DIRTT™

PROJECT DETAILS/NOTES:

FRAME AND TRIM DETAILS

EXTRUSION PROFILE / WALL TYPE:
- [ ] CURVILINEAR
- [x] RECTILINEAR
- [ ] BLADE
- [ ] EVIL TWIN
- [ ] INSPIRE

FRAME FINISH:
- [x] ANODIZED ALUMINUM
- [ ] POWDER-COATED
- [ ] VENEER

BASE TRIM COLOR:
- [x] SILVER
- [ ] BLACK

PVC/GLASS WIPE COLOR:
- [x] SILVER
- [ ] BLACK

REVEAL:
- [x] CLASSIC
- [ ] ENZO

COPLANAR:
- [x] NO
- [ ] YES

FLOOR, CEILING, AND SEISMIC DETAILS

FLOOR TYPE:
- [x] CARPET
- [ ] HARD SURFACE

WALL HEIGHT: 10'-0"
WEIGHT ROOM: 25'-0"

CEILING TYPE:
- [ ] DRYWALL BULKHEAD
- [ ] CORNICE RAIL
- [ ] LOW WALL
- [x] GRID

GRID TYPE:
- [ ] 9/16"
- [x] 15/16"

TILE TYPE:
- [x] FLUSH
- [ ] CONCEALED
- [ ] TEGULAR

SEISMIC REQUIRED:
- [x] NO
- [ ] YES

HARDWARE REQUIREMENTS:

DOORS:
REFERENCE DOOR SCHEDULE FOR FURTHER DETAILS

ELECTRICAL PROVISION REQUIRED - SEE ELECTRICAL SHOP DRAWINGS

DATA PROVISION REQUIRED - SEE PON SHOP DRAWINGS

CASEWORK PROVISIONS REQUIRED - SEE CASEWORK SHOP DRAWINGS

ADDITIONAL NOTES:

DRAWING INDEX

DW-100.1-100.3	LEVEL 1 FLOOR PLANS
DW-100.4-100.6	LEVEL 2 FLOOR PLANS
DW-100.7-100.8	HIGHLIGHTED DIRTT SCOPE
DW-200.1-200.7	LEVEL 1 ELEVATIONS
DW-200.8-200.15	LEVEL 2 ELEVATIONS
DW-300.1	LEVEL 1 INTERSECTION DETAILS LEVEL 1 DOOR SCHEDULE
DW-300.2	LEVEL 2 INTERSECTION DETAILS LEVEL 2 DOOR SCHEDULE
DW-400.1-400.2	TYPICAL DIRTT DETAILS
DW-500.1-500.4	CEILING AND FLOOR EFFICIENCIES

Project Name:
GALENA PARK HIGH SCHOOL
FIELD HOUSE
LEVEL 2

Project Address:
1000 KEENE ST
GALENA PARK, TX
77547

DIRTT
CONSULTANT
SET

Rev	Date	Revision	Initial
-	04JUN25	95% CDS	KA
1	09JUN25	95% CDS (Rev 1)	KA
2	10JUN25	95% CDS (Rev 2)	KA

Project:	148501
Drawn by:	KA
Scale:	AS NOTED
Plot Date:	2025/06/10
Contact:	HEATHER KENNEY
Contact Number:	346-465-4114

ELEVATIONS
SECOND FLOOR

DW-200.10

This drawing is the confidential and proprietary information of DIRTT Environmental Solutions Ltd. (DIRTT). Any reproduction, alteration, disclosure or use of this drawing other than as agreed to by DIRTT is expressly prohibited. Do not use drawing for cutting purposes. All dimensions, drawings, details, and specifications contained herein must be verified by sub-contractors and any discrepancies must be reported to DIRTT in writing before proceeding with work. See cover page of drawing package for full disclaimer.

C:\Users\SWILLI~1\AppData\Local\Temp\ACEcad-fb9ac0e7-7db4-4050-b194-d2a248d8a0f2\ACEcad.dwg 2025-6-10 1:37:46 PM

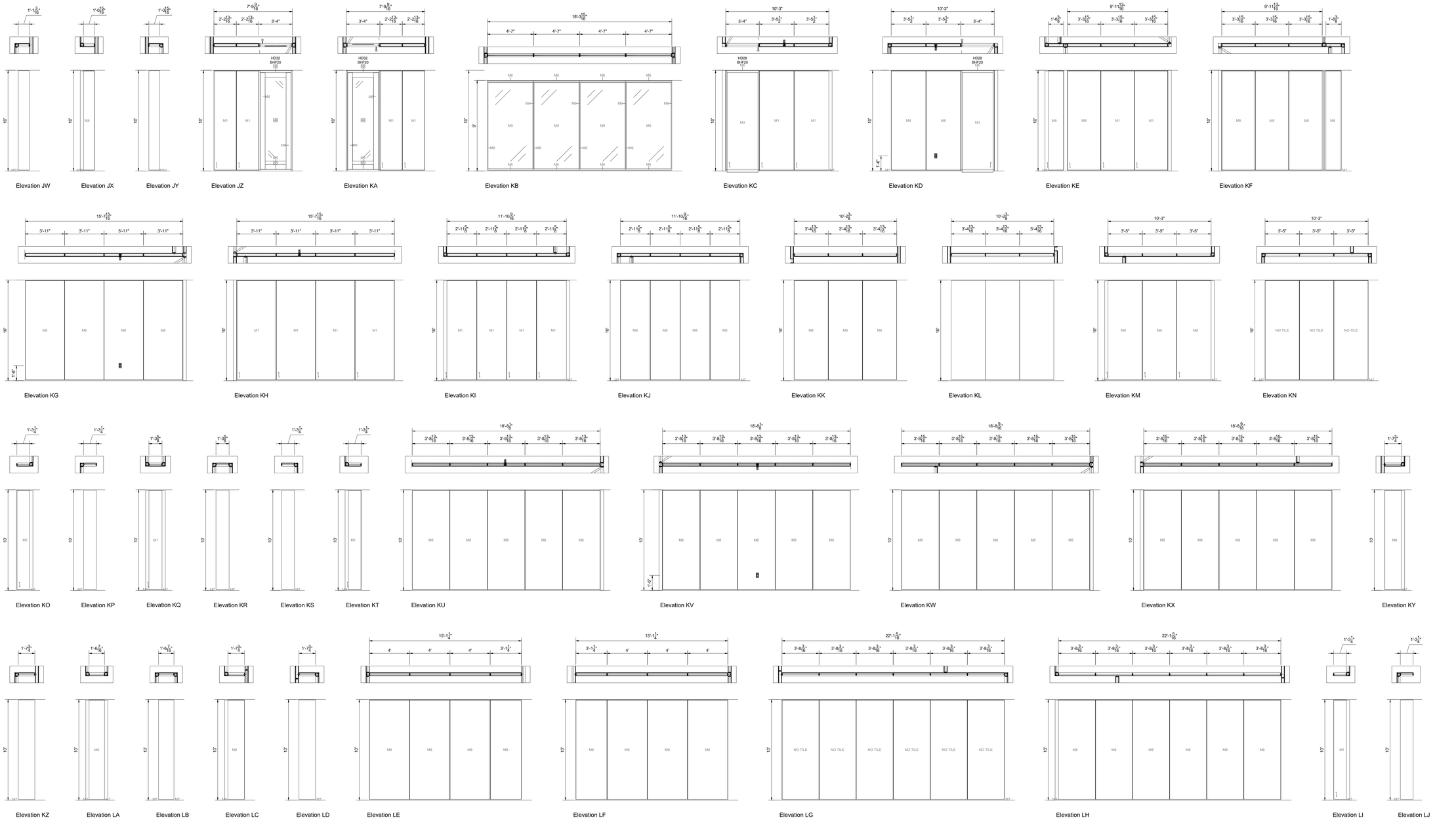

1 ELEVATIONS
DW-200.11

1/4" = 1'-0" / 1:48.000004

DIRTT Walls Finish Schedule		
Tag	Finish	Specification
M1	THRM	Thermofoil Grade 2; DIRTT SSI Thermofoil Canadian Grey Super Matte
M3	THRM	Thermofoil Grade 3; DIRTT OMNOVA Thermofoil Arturo Candlelight
M6	ANO	Grade 1 Anodized; Anodized Finish - Clear
M7	PWD	DIRTT Powder Coated Grade 2; Powder Coat - Shimmer DPM50 (Metallic)
M8	PNT	DIRTT ChromacoatPlus Grade 1; ChromacoatPlus - Fog DC82; UC-50022
M9	GLS	Center Mounted Tempered Glass Tile; 6mm Tempered Glass - Clear; No Edge Polish; 6.0mm
M11	THRM	Thermofoil Grade 2; DIRTT SSI Thermofoil Canadian Grey Super Matte (Horizontal)
M12	GLS	Grade 1 (Non-metallic) Backpaint; Clear Glass: Rich Black DG56; Flat Polish all edges; 6.0mm
M14	PWD	Yellow PC; Custom Powder Coat
M15	GLS_Graphic	Starphire Glass; Custom Image; Honeycomb; Custom Image; Flat Polish all edges;6.0mm
M18	MCF	WriteAway: Buttercup Gloss; .022mm CRS - Porcelain coated white laminate
M22	FAB	DIRTT Fabric G10 Glint; Glint Gobi (Railroaded); .022mm CRS - Porcelain coated white laminate
M33	PNT	DIRTT ChromacoatPlus Grade 1; ChromacoatPlus - Black DC63; UC-50004
M36	GLS	Grade 1 (Non-metallic) Backpaint; Clear Glass: Shimmer DG50; Flat Polish all edges; 6.0mm
M37	MCF	WriteAway: Emerald Green Gloss; .022mm CRS - Porcelain coated white laminate
M38	PNT	DIRTT ChromacoatPlus Grade 1; ChromacoatPlus - Polar White DC60; UC-50001
M41	PNT	DIRTT ChromacoatPlus Grade 1; ChromacoatPlus - To Be Determined
M50	PWD	DIRTT Powder Coated Standard; Powder Coat - Black DP13 (Textured)

DIRTT™

PROJECT DETAILS/NOTES:

FRAME AND TRIM DETAILS

EXTRUSION PROFILE / WALL TYPE:
- ☐ CURVILINEAR
- ☑ RECTILINEAR
- ☐ BLADE
- ☐ EVIL TWIN
- ☐ INSPIRE

FRAME FINISH:
- ☑ ANODIZED ALUMINUM
- ☐ POWDER-COATED
- ☐ VENEER

BASE TRIM COLOR:
- ☑ SILVER
- ☐ BLACK

PVC/GLASS WIPE COLOR:
- ☑ SILVER
- ☐ BLACK

REVEAL:
- ☑ CLASSIC
- ☐ ENZO

COPLANAR:
- ☑ NO
- ☐ YES

FLOOR, CEILING, AND SEISMIC DETAILS

FLOOR TYPE:
- ☑ CARPET
- ☐ HARD SURFACE

WALL HEIGHT: 10'-0"
WEIGHT ROOM: 25'-0"

CEILING TYPE:
- ☐ DRYWALL BULKHEAD
- ☐ CORNICE RAIL
- ☐ LOW WALL
- ☑ GRID

GRID TYPE:
- ☐ 9/16"
- ☑ 15/16"

TILE TYPE:
- ☑ FLUSH
- ☐ CONCEALED
- ☐ TEGULAR

SEISMIC REQUIRED:
- ☑ NO
- ☐ YES

HARDWARE REQUIREMENTS:

DOORS:
REFERENCE DOOR SCHEDULE FOR FURTHER DETAILS

ELECTRICAL PROVISION REQUIRED - SEE ELECTRICAL SHOP DRAWINGS

DATA PROVISION REQUIRED - SEE PON SHOP DRAWINGS

CASEWORK PROVISIONS REQUIRED - SEE CASEWORK SHOP DRAWINGS

ADDITIONAL NOTES:

DRAWING INDEX

DW-100.1-100.3	LEVEL 1 FLOOR PLANS
DW-100.4-100.6	LEVEL 2 FLOOR PLANS
DW-100.7-100.8	HIGHLIGHTED DIRTT SCOPE
DW-200.1-200.7	LEVEL 1 ELEVATIONS
DW-200.8-200.15	LEVEL 2 ELEVATIONS
DW-300.1	LEVEL 1 INTERSECTION DETAILS LEVEL 1 DOOR SCHEDULE
DW-300.2	LEVEL 2 INTERSECTION DETAILS LEVEL 2 DOOR SCHEDULE
DW-400.1-400.2	TYPICAL DIRTT DETAILS
DW-500.1-500.4	CEILING AND FLOOR EFFICIENCIES

Project Name:
GALENA PARK HIGH SCHOOL
FIELD HOUSE
LEVEL 2

Project Address:
1000 KEENE ST
GALENA PARK, TX
77547

DIRTT
CONSULTANT
SET

Rev	Date	Revision	Initial
-	04JUN25	95% CDS	KA
1	09JUN25	95% CDS (Rev 1)	KA
2	10JUN25	95% CDS (Rev 2)	KA

Project:	148501
Drawn by:	KA
Scale:	AS NOTED
Plot Date:	2025/06/10
Contact:	HEATHER KENNEY
Contact Number:	346-465-4114

ELEVATIONS
SECOND FLOOR

DW-200.11

This drawing is the confidential and proprietary information of DIRTT Environmental Solutions Ltd. (DIRTT). Any reproduction, alteration, disclosure or use of this drawing other than as agreed to by DIRTT is expressly prohibited. Do not use drawing for safe purposes. All dimensions, drawings, details, and specifications contained herein must be verified by sub-contractors and any discrepancies must be reported to DIRTT in writing before proceeding with work. See cover page of drawing package for full disclaimer.

C:\Users\SWILLI~1\AppData\Local\Temp\ICEcad-fb9ac0e7-7db4-4050-b194-d2a248d8a0f2\ICEcad.dwg 2025-6-10 1:37:56 PM

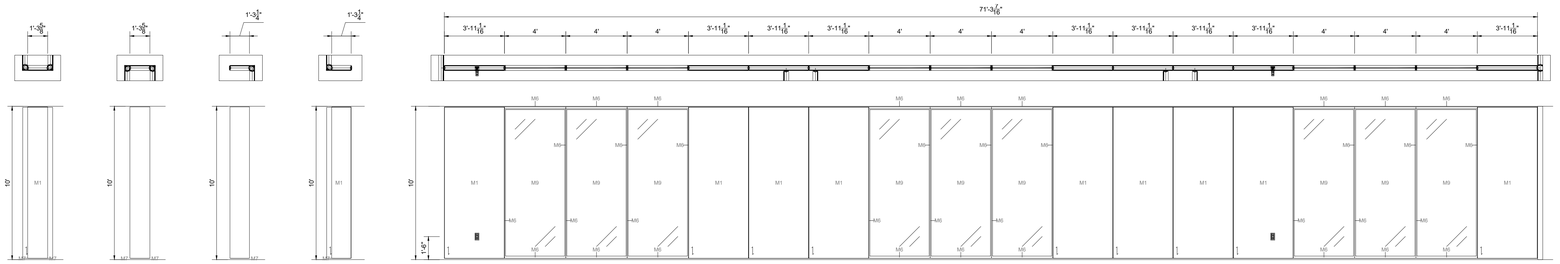

Elevation LK Elevation LL Elevation LM Elevation LN Elevation LO

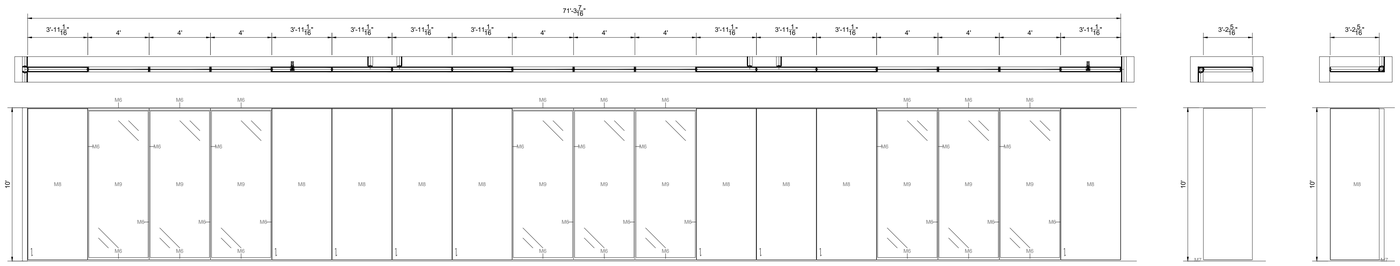

Elevation LP

Elevation LQ Elevation LR

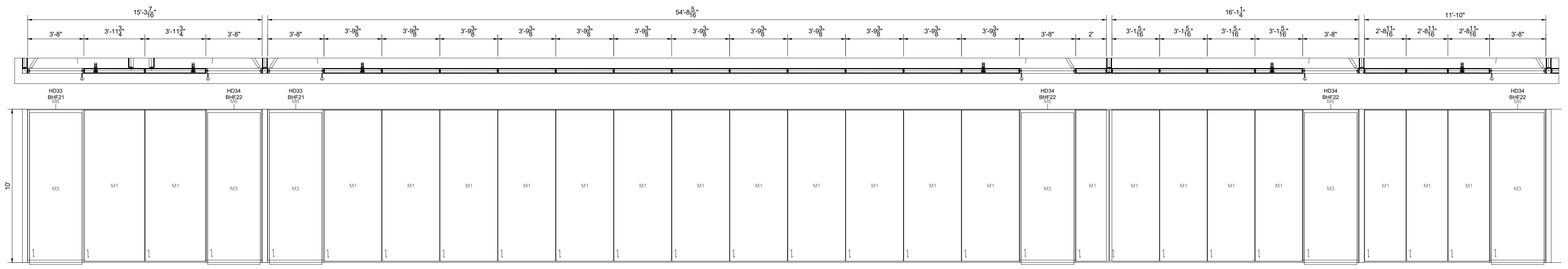

Elevation LS

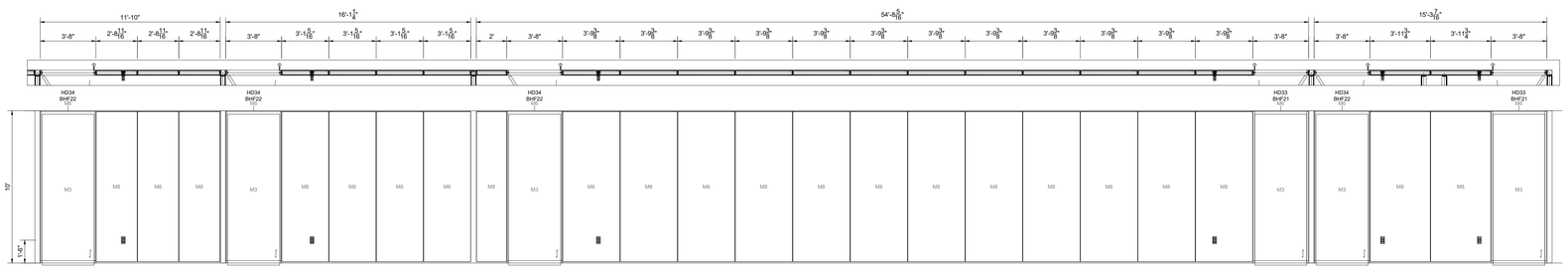

Elevation LT

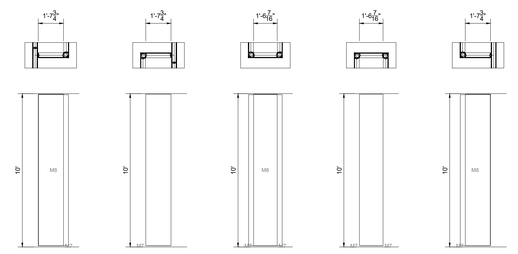

Elevation LU Elevation LV Elevation LW Elevation LX Elevation LY

1 ELEVATIONS
DW-200.12

1/4" = 1'-0" / 1:48.000003

DIRTT Walls Finish Schedule		
Tag	Finish	Specification
M1	THRM	Thermofoil Grade 2; DIRTT SSI Thermofoil Canadian Grey Super Matte
M3	THRM	Thermofoil Grade 3; DIRTT OMNOVA Thermofoil Arturo Candlelight
M6	ANO	Grade 1 Anodized; Anodized Finish - Clear
M7	PWD	DIRTT Powder Coated Grade 2; Powder Coat - Shimmer DPM50 (Metallic)
M8	PNT	DIRTT ChromacoatPlus Grade 1; ChromacoatPlus - Fog DC82; UC-50022
M9	GLS	Center Mounted Tempered Glass Tile; 6mm Tempered Glass - Clear; No Edge Polish; 6.0mm
M11	THRM	Thermofoil Grade 2; DIRTT SSI Thermofoil Canadian Grey Super Matte (Horizontal)
M12	GLS	Grade 1 (Non-metallic) Backpaint; Clear Glass: Rich Black DG56; Flat Polish all edges; 6.0mm
M14	PWD	Yellow PC; Custom Powder Coat
M15	GLS_Graphic	Starphire Glass; Custom Image; Honeycomb; Custom Image; Flat Polish all edges;6.0mm
M18	MCF	WriteAway: Buttercup Gloss; .022mm CRS - Porcelain coated white laminate
M22	FAB	DIRTT Fabric G10 Glint; Glint Gobi (Railroaded); .022mm CRS - Porcelain coated white laminate
M33	PNT	DIRTT ChromacoatPlus Grade 1; ChromacoatPlus - Black DC63; UC-50004
M36	GLS	Grade 1 (Non-metallic) Backpaint; Clear Glass: Shimmer DG50; Flat Polish all edges; 6.0mm
M37	MCF	WriteAway: Emerald Green Gloss; .022mm CRS - Porcelain coated white laminate
M38	PNT	DIRTT ChromacoatPlus Grade 1; ChromacoatPlus - Polar White DC60; UC-50001
M41	PNT	DIRTT ChromacoatPlus Grade 1; ChromacoatPlus - To Be Determined
M50	PWD	DIRTT Powder Coated Standard; Powder Coat - Black DP13 (Textured)

DIRTT™

PROJECT DETAILS/NOTES:

FRAME AND TRIM DETAILS

EXTRUSION PROFILE / WALL TYPE:
- [ ] CURVILINEAR
- [x] RECTILINEAR
- [ ] BLADE
- [ ] EVIL TWIN
- [ ] INSPIRE

FRAME FINISH:
- [x] ANODIZED ALUMINUM
- [ ] POWDER-COATED
- [ ] VENEER

BASE TRIM COLOR:
- [x] SILVER
- [ ] BLACK

PVC/GLASS WIPE COLOR:
- [x] SILVER
- [ ] BLACK

REVEAL:
- [x] CLASSIC
- [ ] ENZO

COPLANAR:
- [x] NO
- [ ] YES

FLOOR, CEILING, AND SEISMIC DETAILS

FLOOR TYPE:
- [x] CARPET
- [ ] HARD SURFACE

WALL HEIGHT: 10'-0"
WEIGHT ROOM: 25'-0"

CEILING TYPE:
- [ ] DRYWALL BULKHEAD
- [ ] CORNICE RAIL
- [ ] LOW WALL
- [x] GRID

GRID TYPE:
- [ ] 9/16"
- [x] 15/16"

TILE TYPE:
- [x] FLUSH
- [ ] CONCEALED
- [ ] TEGULAR

SEISMIC REQUIRED:
- [x] NO
- [ ] YES

HARDWARE REQUIREMENTS:

DOORS:
REFERENCE DOOR SCHEDULE FOR FURTHER DETAILS

ELECTRICAL PROVISION REQUIRED - SEE ELECTRICAL SHOP DRAWINGS

DATA PROVISION REQUIRED - SEE PON SHOP DRAWINGS

CASEWORK PROVISIONS REQUIRED - SEE CASEWORK SHOP DRAWINGS

ADDITIONAL NOTES:

DRAWING INDEX

DW-100.1-100.3	LEVEL 1 FLOOR PLANS
DW-100.4-100.6	LEVEL 2 FLOOR PLANS
DW-100.7-100.8	HIGHLIGHTED DIRTT SCOPE
DW-200.1-200.7	LEVEL 1 ELEVATIONS
DW-200.8-200.15	LEVEL 2 ELEVATIONS
DW-300.1	LEVEL 1 INTERSECTION DETAILS LEVEL 1 DOOR SCHEDULE
DW-300.2	LEVEL 2 INTERSECTION DETAILS LEVEL 2 DOOR SCHEDULE
DW-400.1-400.2	TYPICAL DIRTT DETAILS
DW-500.1-500.4	CEILING AND FLOOR EFFICIENCIES

Project Name:
GALENA PARK HIGH SCHOOL
FIELD HOUSE
LEVEL 2

Project Address:
1000 KEENE ST
GALENA PARK, TX
77547

DIRTT CONSULTANT SET

Rev	Date	Revision	Initial
-	04JUN25	95% CDS	KA
1	09JUN25	95% CDS (Rev 1)	KA
2	10JUN25	95% CDS (Rev 2)	KA

Project:	148501
Drawn by:	KA
Scale:	AS NOTED
Plot Date:	2025/06/10
Contact:	HEATHER KENNEY
Contact Number:	346-465-4114

ELEVATIONS
SECOND FLOOR

DW-200.12

This drawing is the confidential and proprietary information of DIRTT Environmental Solutions Ltd. (DIRTT). Any reproduction, alteration, disclosure or use of this drawing other than as agreed to by DIRTT is expressly prohibited. Do not use drawing for cost purposes. All dimensions, drawings, details, and specifications contained herein must be verified by sub-contractors and any discrepancies must be reported to DIRTT in writing before proceeding with work. See cover page of drawing package for full disclaimer.

C:\Users\SWILLI~1\AppData\Local\Temp\ICEcad-fb9acc0e7-7db4-4050-b194-d2a248d8a0f2\ICEcad.dwg 2025-6-10 1:38:06 PM

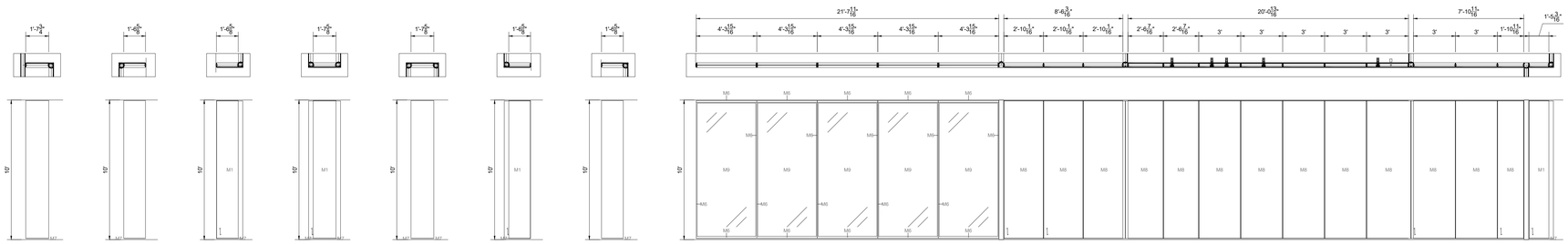

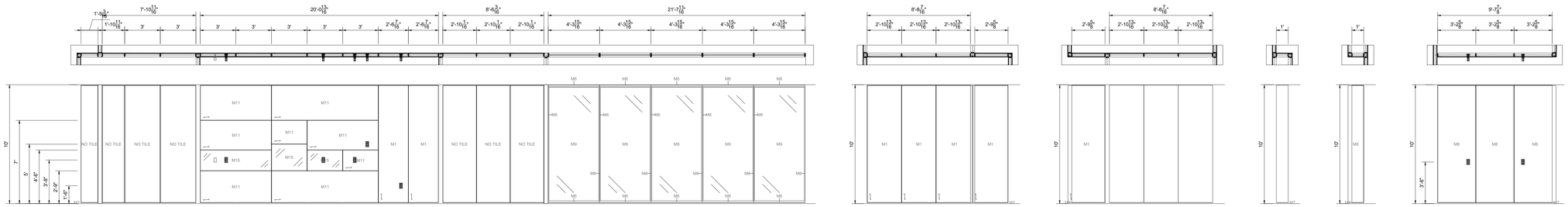

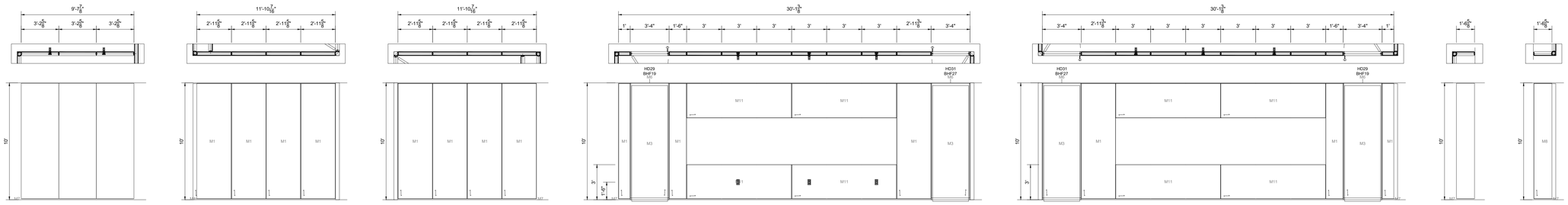

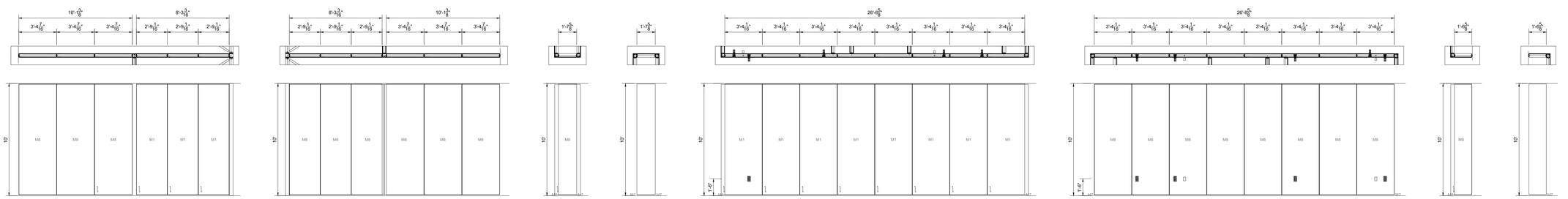

1 ELEVATIONS
DW-200.13

1/4" = 1'-0" / 1:48.000003

DIRTT Walls Finish Schedule		
Tag	Finish	Specification
M1	THRM	Thermofoil Grade 2; DIRTT SSI Thermofoil Canadian Grey Super Matte
M3	THRM	Thermofoil Grade 3; DIRTT OMNOVA Thermofoil Arturo Candlelight
M6	ANO	Grade 1 Anodized; Anodized Finish - Clear
M7	PWD	DIRTT Powder Coated Grade 2; Powder Coat - Shimmer DPM50 (Metallic)
M8	PNT	DIRTT ChromacoatPlus Grade 1; ChromacoatPlus - Fog DC82; UC-50022
M9	GLS	Center Mounted Tempered Glass Tile; 6mm Tempered Glass - Clear; No Edge Polish; 6.0mm
M11	THRM	Thermofoil Grade 2; DIRTT SSI Thermofoil Canadian Grey Super Matte (Horizontal)
M12	GLS	Grade 1 (Non-metallic) Backpaint; Clear Glass: Rich Black DG56; Flat Polish all edges; 6.0mm
M14	PWD	Yellow PC; Custom Powder Coat
M15	GLS_Graphic	Starphire Glass; Custom Image; Honeycomb; Custom Image; Flat Polish all edges;6.0mm
M18	MCF	WriteAway: Buttercup Gloss; .022mm CRS - Porcelain coated white laminate
M22	FAB	DIRTT Fabric G10 Glint; Glint Gobi (Railroaded); .022mm CRS - Porcelain coated white laminate
M33	PNT	DIRTT ChromacoatPlus Grade 1; ChromacoatPlus - Black DC63; UC-50004
M36	GLS	Grade 1 (Non-metallic) Backpaint; Clear Glass: Shimmer DG50; Flat Polish all edges; 6.0mm
M37	MCF	WriteAway: Emerald Green Gloss; .022mm CRS - Porcelain coated white laminate
M38	PNT	DIRTT ChromacoatPlus Grade 1; ChromacoatPlus - Polar White DC60; UC-50001
M41	PNT	DIRTT ChromacoatPlus Grade 1; ChromacoatPlus - To Be Determined
M50	PWD	DIRTT Powder Coated Standard; Powder Coat - Black DP13 (Textured)

DIRTT™

PROJECT DETAILS/NOTES:

FRAME AND TRIM DETAILS

EXTRUSION PROFILE / WALL TYPE:
- ☐ CURVILINEAR
- ☑ RECTILINEAR
- ☐ BLADE
- ☐ EVIL TWIN
- ☐ INSPIRE

FRAME FINISH:
- ☑ ANODIZED ALUMINUM
- ☐ POWDER-COATED
- ☐ VENEER

BASE TRIM COLOR:
- ☑ SILVER
- ☐ BLACK

PVC/GLASS WIPE COLOR:
- ☑ SILVER
- ☐ BLACK

REVEAL:
- ☑ CLASSIC
- ☐ ENZO

COPLANAR:
- ☑ NO
- ☐ YES

FLOOR, CEILING, AND SEISMIC DETAILS

FLOOR TYPE:
- ☑ CARPET
- ☐ HARD SURFACE

WALL HEIGHT: 10'-0"
WEIGHT ROOM: 25'-0"

CEILING TYPE:
- ☐ DRYWALL BULKHEAD
- ☐ CORNICE RAIL
- ☐ LOW WALL
- ☑ GRID

GRID TYPE:
- ☐ 9/16"
- ☑ 15/16"

TILE TYPE:
- ☑ FLUSH
- ☐ CONCEALED
- ☐ TEGULAR

SEISMIC REQUIRED:
- ☑ NO
- ☐ YES

HARDWARE REQUIREMENTS:

DOORS:
REFERENCE DOOR SCHEDULE FOR FURTHER DETAILS

ELECTRICAL PROVISION REQUIRED - SEE ELECTRICAL SHOP DRAWINGS

DATA PROVISION REQUIRED - SEE PON SHOP DRAWINGS

CASEWORK PROVISIONS REQUIRED - SEE CASEWORK SHOP DRAWINGS

ADDITIONAL NOTES:

DRAWING INDEX

DW-100.1-100.3	LEVEL 1 FLOOR PLANS
DW-100.4-100.6	LEVEL 2 FLOOR PLANS
DW-100.7-100.8	HIGHLIGHTED DIRTT SCOPE
DW-200.1-200.7	LEVEL 1 ELEVATIONS
DW-200.8-200.15	LEVEL 2 ELEVATIONS
DW-300.1	LEVEL 1 INTERSECTION DETAILS LEVEL 1 DOOR SCHEDULE
DW-300.2	LEVEL 2 INTERSECTION DETAILS LEVEL 2 DOOR SCHEDULE
DW-400.1-400.2	TYPICAL DIRTT DETAILS
DW-500.1-500.4	CEILING AND FLOOR EFFICIENCIES

Project Name:
GALENA PARK HIGH SCHOOL
FIELD HOUSE
LEVEL 2

Project Address:
1000 KEENE ST
GALENA PARK, TX
77547

DIRTT
CONSULTANT
SET

Rev	Date	Revision	Initial
-	04JUN25	95% CDS	KA
1	09JUN25	95% CDS (Rev 1)	KA
2	10JUN25	95% CDS (Rev 2)	KA

Project:	148501
Drawn by:	KA
Scale:	AS NOTED
Plot Date:	2025/06/10
Contact:	HEATHER KENNEY
Contact Number:	346-465-4114

ELEVATIONS
SECOND FLOOR

DW-200.13

This drawing is the confidential and proprietary information of DIRTT Environmental Solutions Ltd. (DIRTT). Any reproduction, alteration, disclosure or use of this drawing other than as agreed to by DIRTT is expressly prohibited. Do not use drawing for cable purposes. All dimensions, drawings, details, and specifications contained herein must be verified by sub-contractors and any discrepancies must be reported to DIRTT in writing before proceeding with work. See cover page of drawing package for full disclaimer.

C:\Users\SWILLI~1\AppData\Local\Temp\ICEcad-fb9ac0e7-7d94-4050-b194-d2e248d8a0f2\ICEcad.dwg 2025-6-10 1:38:16 PM

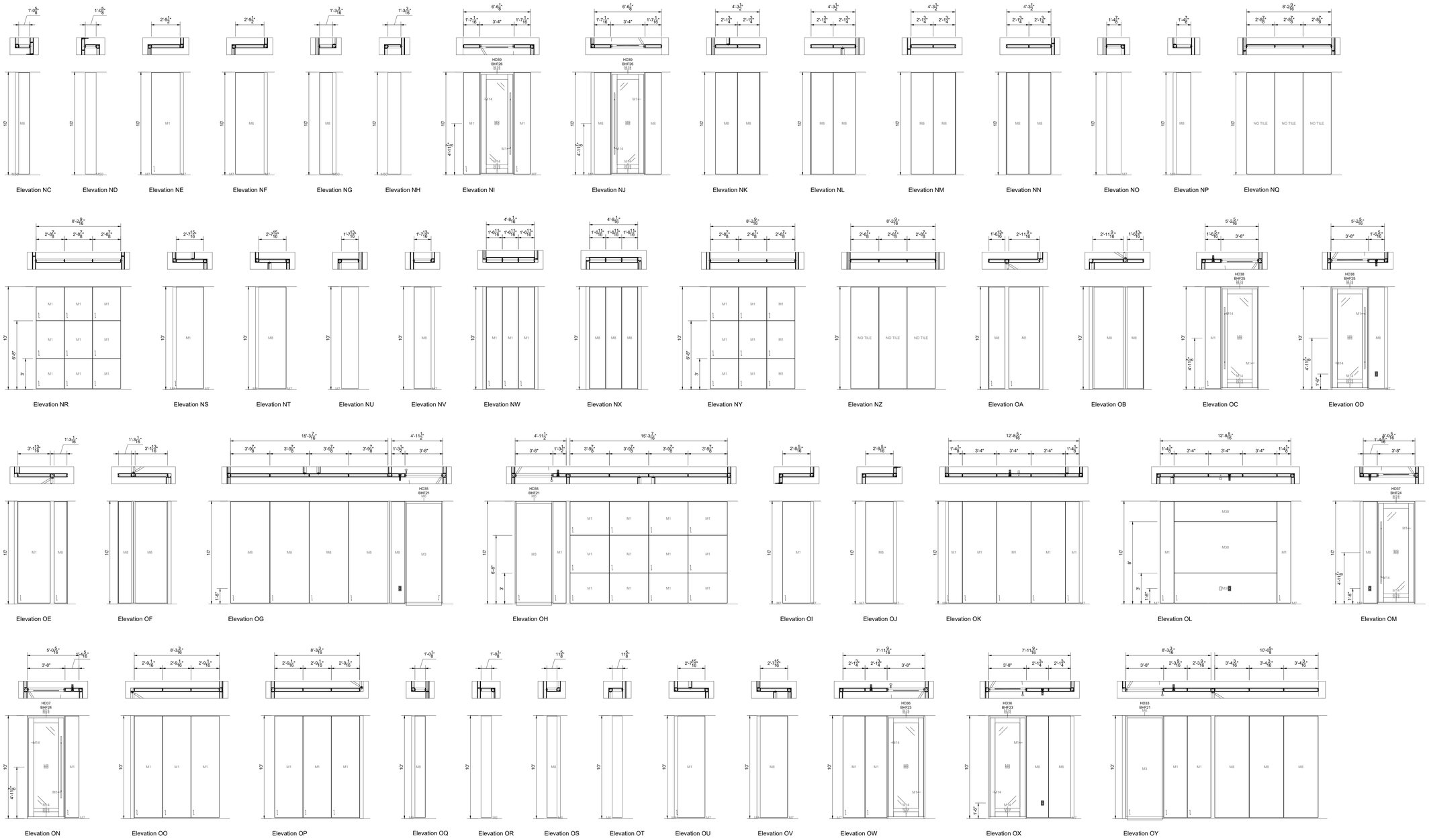

1 ELEVATIONS
DW-200.14

1/4" = 1'-0" / 1:48.000002

DIRTT Walls Finish Schedule		
Tag	Finish	Specification
M1	THRM	Thermofoil Grade 2; DIRTT SSI Thermofoil Canadian Grey Super Matte
M3	THRM	Thermofoil Grade 3; DIRTT OMNOVA Thermofoil Arturo Candlelight
M6	ANO	Grade 1 Anodized; Anodized Finish - Clear
M7	PWD	DIRTT Powder Coated Grade 2; Powder Coat - Shimmer DPM50 (Metallic)
M8	PNT	DIRTT ChromacoatPlus Grade 1; ChromacoatPlus - Fog DC82; UC-50022
M9	GLS	Center Mounted Tempered Glass Tile; 6mm Tempered Glass - Clear; No Edge Polish; 6.0mm
M11	THRM	Thermofoil Grade 2; DIRTT SSI Thermofoil Canadian Grey Super Matte (Horizontal)
M12	GLS	Grade 1 (Non-metallic) Backpaint; Clear Glass: Rich Black DG56; Flat Polish all edges; 6.0mm
M14	PWD	Yellow PC; Custom Powder Coat
M15	GLS_Graphic	Starphire Glass; Custom Image; Honeycomb; Custom Image; Flat Polish all edges;6.0mm
M18	MCF	WriteAway: Buttercup Gloss; .022mm CRS - Porcelain coated white laminate
M22	FAB	DIRTT Fabric G10 Glint; Glint Gobi (Railroaded); .022mm CRS - Porcelain coated white laminate
M33	PNT	DIRTT ChromacoatPlus Grade 1; ChromacoatPlus - Black DC63; UC-50004
M36	GLS	Grade 1 (Non-metallic) Backpaint; Clear Glass: Shimmer DG50; Flat Polish all edges; 6.0mm
M37	MCF	WriteAway: Emerald Green Gloss; .022mm CRS - Porcelain coated white laminate
M38	PNT	DIRTT ChromacoatPlus Grade 1; ChromacoatPlus - Polar White DC60; UC-50001
M41	PNT	DIRTT ChromacoatPlus Grade 1; ChromacoatPlus - To Be Determined
M50	PWD	DIRTT Powder Coated Standard; Powder Coat - Black DP13 (Textured)

DIRTT™

PROJECT DETAILS/NOTES:

FRAME AND TRIM DETAILS

EXTRUSION PROFILE / WALL TYPE:
- [ ] CURVILINEAR
- [x] RECTILINEAR
- [ ] BLADE
- [ ] EVIL TWIN
- [ ] INSPIRE

FRAME FINISH:
- [x] ANODIZED ALUMINUM
- [ ] POWDER-COATED
- [ ] VENEER

BASE TRIM COLOR:
- [x] SILVER
- [ ] BLACK

PVC/GLASS WIPE COLOR:
- [x] SILVER
- [ ] BLACK

REVEAL:
- [x] CLASSIC
- [ ] ENZO

COPLANAR:
- [x] NO
- [ ] YES

FLOOR, CEILING, AND SEISMIC DETAILS

FLOOR TYPE:
- [x] CARPET
- [ ] HARD SURFACE

WALL HEIGHT: 10'-0"
WEIGHT ROOM: 25'-0"

CEILING TYPE:
- [ ] DRYWALL BULKHEAD
- [ ] CORNICE RAIL
- [ ] LOW WALL
- [x] GRID

GRID TYPE:
- [ ] 9/16"
- [x] 15/16"

TILE TYPE:
- [x] FLUSH
- [ ] CONCEALED
- [ ] TEGULAR

SEISMIC REQUIRED:
- [x] NO
- [ ] YES

HARDWARE REQUIREMENTS:

DOORS:
REFERENCE DOOR SCHEDULE FOR FURTHER DETAILS

ELECTRICAL PROVISION REQUIRED - SEE ELECTRICAL SHOP DRAWINGS

DATA PROVISION REQUIRED - SEE PON SHOP DRAWINGS

CASEWORK PROVISIONS REQUIRED - SEE CASEWORK SHOP DRAWINGS

ADDITIONAL NOTES:

DRAWING INDEX

DW-100.1-100.3	LEVEL 1 FLOOR PLANS
DW-100.4-100.6	LEVEL 2 FLOOR PLANS
DW-100.7-100.8	HIGHLIGHTED DIRTT SCOPE
DW-200.1-200.7	LEVEL 1 ELEVATIONS
DW-200.8-200.15	LEVEL 2 ELEVATIONS
DW-300.1	LEVEL 1 INTERSECTION DETAILS LEVEL 1 DOOR SCHEDULE
DW-300.2	LEVEL 2 INTERSECTION DETAILS LEVEL 2 DOOR SCHEDULE
DW-400.1-400.2	TYPICAL DIRTT DETAILS
DW-500.1-500.4	CEILING AND FLOOR EFFICIENCIES

Project Name:
GALENA PARK HIGH SCHOOL
FIELD HOUSE
LEVEL 2

Project Address:
1000 KEENE ST
GALENA PARK, TX
77547

DIRTT CONSULTANT SET

Rev	Date	Revision	Initial
-	04JUN25	95% CDS	KA
1	09JUN25	95% CDS (Rev 1)	KA
2	10JUN25	95% CDS (Rev 2)	KA

Project:	148501
Drawn by:	KA
Scale:	AS NOTED
Plot Date:	2025/06/10
Contact:	HEATHER KENNEY
Contact Number:	346-465-4114

ELEVATIONS
SECOND FLOOR

DW-200.14

This drawing is the confidential and proprietary information of DIRTT Environmental Solutions Ltd. (DIRTT). Any reproduction, alteration, disclosure or use of this drawing other than as agreed to by DIRTT is expressly prohibited. Do not use drawing for rate purposes. All dimensions, drawings, details, and specifications contained herein must be verified by sub-contractors and any discrepancies must be reported to DIRTT in writing before proceeding with work. See cover page of drawing package for full disclaimer.

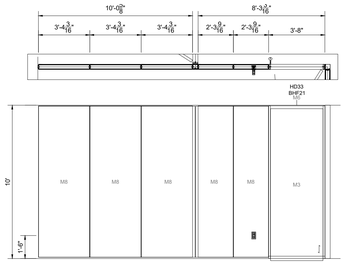

Elevation OZ

Elevation PA

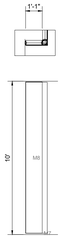

Elevation PB

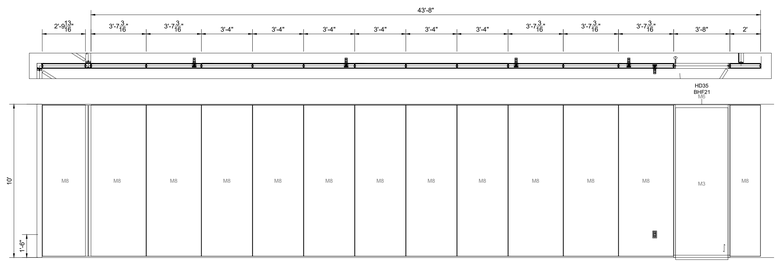

Elevation PC

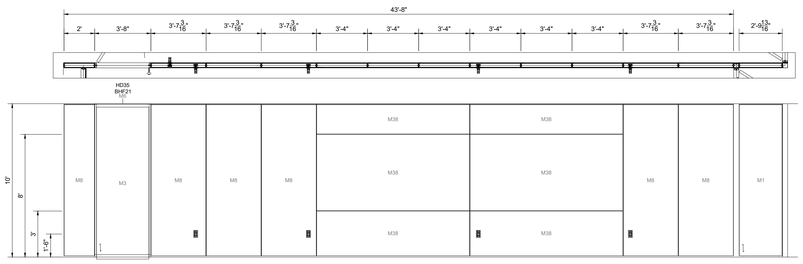

Elevation PD

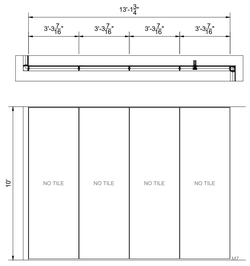

Elevation PE

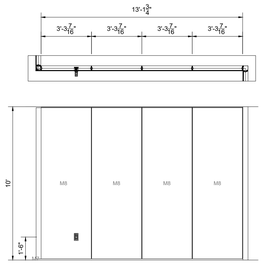

Elevation PF

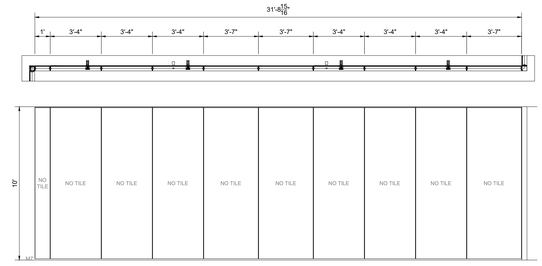

Elevation PG

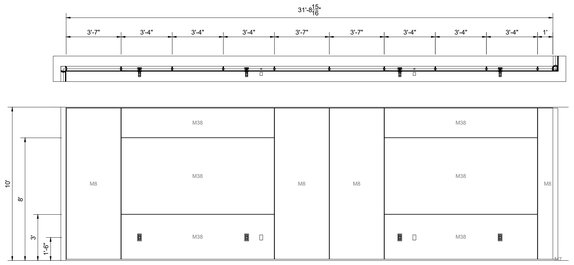

Elevation PH

Elevation PI

Elevation PJ

Elevation PK

Elevation PL

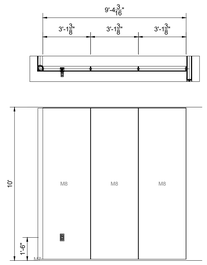

Elevation PM

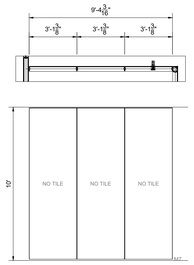

Elevation PN

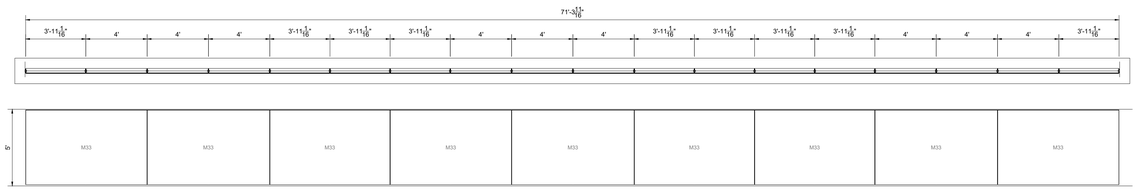

Elevation PO

1 ELEVATIONS
DW-200.15

1/4" = 1'-0" / 1:48.000003

DIRTT Walls Finish Schedule		
Tag	Finish	Specification
M1	THRM	Thermofoil Grade 2; DIRTT SSI Thermofoil Canadian Grey Super Matte
M3	THRM	Thermofoil Grade 3; DIRTT OMNOVA Thermofoil Arturo Candlelight
M6	ANO	Grade 1 Anodized; Anodized Finish - Clear
M7	PWD	DIRTT Powder Coated Grade 2; Powder Coat - Shimmer DPM50 (Metallic)
M8	PNT	DIRTT ChromacoatPlus Grade 1; ChromacoatPlus - Fog DC82; UC-50022
M9	GLS	Center Mounted Tempered Glass Tile; 6mm Tempered Glass - Clear; No Edge Polish; 6.0mm
M11	THRM	Thermofoil Grade 2; DIRTT SSI Thermofoil Canadian Grey Super Matte (Horizontal)
M12	GLS	Grade 1 (Non-metallic) Backpaint; Clear Glass: Rich Black DG56; Flat Polish all edges; 6.0mm
M14	PWD	Yellow PC; Custom Powder Coat
M15	GLS_Graphic	Starphire Glass; Custom Image; Honeycomb; Custom Image; Flat Polish all edges;6.0mm
M18	MCF	WriteAway: Buttercup Gloss; .022mm CRS - Porcelain coated white laminate
M22	FAB	DIRTT Fabric G10 Glint; Glint Gobi (Railroaded); .022mm CRS - Porcelain coated white laminate
M33	PNT	DIRTT ChromacoatPlus Grade 1; ChromacoatPlus - Black DC63; UC-50004
M36	GLS	Grade 1 (Non-metallic) Backpaint; Clear Glass: Shimmer DG50; Flat Polish all edges; 6.0mm
M37	MCF	WriteAway: Emerald Green Gloss; .022mm CRS - Porcelain coated white laminate
M38	PNT	DIRTT ChromacoatPlus Grade 1; ChromacoatPlus - Polar White DC60; UC-50001
M41	PNT	DIRTT ChromacoatPlus Grade 1; ChromacoatPlus - To Be Determined
M50	PWD	DIRTT Powder Coated Standard; Powder Coat - Black DP13 (Textured)

DIRTT™

PROJECT DETAILS/NOTES:

FRAME AND TRIM DETAILS

EXTRUSION PROFILE / WALL TYPE:
- [ ] CURVILINEAR
- [x] RECTILINEAR
- [ ] BLADE
- [ ] EVIL TWIN
- [ ] INSPIRE

FRAME FINISH:
- [x] ANODIZED ALUMINUM
- [ ] POWDER-COATED
- [ ] VENEER

BASE TRIM COLOR:
- [x] SILVER
- [ ] BLACK

PVC/GLASS WIPE COLOR:
- [x] SILVER
- [ ] BLACK

REVEAL:
- [x] CLASSIC
- [ ] ENZO

COPLANAR:
- [x] NO
- [ ] YES

FLOOR, CEILING, AND SEISMIC DETAILS

FLOOR TYPE:
- [x] CARPET
- [ ] HARD SURFACE

WALL HEIGHT: 10'-0"
WEIGHT ROOM: 25'-0"

CEILING TYPE:
- [ ] DRYWALL BULKHEAD
- [ ] CORNICE RAIL
- [ ] LOW WALL
- [x] GRID

GRID TYPE:
- [ ] 9/16"
- [x] 15/16"

TILE TYPE:
- [x] FLUSH
- [ ] CONCEALED
- [ ] TEGULAR

SEISMIC REQUIRED:
- [x] NO
- [ ] YES

HARDWARE REQUIREMENTS:

DOORS:
REFERENCE DOOR SCHEDULE FOR FURTHER DETAILS

ELECTRICAL PROVISION REQUIRED - SEE ELECTRICAL SHOP DRAWINGS

DATA PROVISION REQUIRED - SEE PON SHOP DRAWINGS

CASEWORK PROVISIONS REQUIRED - SEE CASEWORK SHOP DRAWINGS

ADDITIONAL NOTES:

DRAWING INDEX

DW-100.1-100.3	LEVEL 1 FLOOR PLANS
DW-100.4-100.6	LEVEL 2 FLOOR PLANS
DW-100.7-100.8	HIGHLIGHTED DIRTT SCOPE
DW-200.1-200.7	LEVEL 1 ELEVATIONS
DW-200.8-200.15	LEVEL 2 ELEVATIONS
DW-300.1	LEVEL 1 INTERSECTION DETAILS LEVEL 1 DOOR SCHEDULE
DW-300.2	LEVEL 2 INTERSECTION DETAILS LEVEL 2 DOOR SCHEDULE
DW-400.1-400.2	TYPICAL DIRTT DETAILS
DW-500.1-500.4	CEILING AND FLOOR EFFICIENCIES

Project Name:
GALENA PARK HIGH SCHOOL
FIELD HOUSE
LEVEL 2

Project Address:
1000 KEENE ST
GALENA PARK, TX
77547

DIRTT
CONSULTANT
SET

Rev	Date	Revision	Initial
-	04JUN25	95% CDS	KA
1	09JUN25	95% CDS (Rev 1)	KA
2	10JUN25	95% CDS (Rev 2)	KA

Project:	148501
Drawn by:	KA
Scale:	AS NOTED
Plot Date:	2025/06/10
Contact:	HEATHER KENNEY
Contact Number:	346-465-4114

ELEVATIONS
SECOND FLOOR

DW-200.15

This drawing is the confidential and proprietary information of DIRTT Environment Solutions Ltd. (DIRTT). Any reproduction, alteration, disclosure or use of this drawing other than as agreed to by DIRTT is expressly prohibited. Do not use drawing for cute purposes. All dim dimensions, drawings, details, and specifications contained herein must be verified by sub-contractors and any discrepancies must be reported to DIRTT in writing before proceeding with work. See cover page of drawing package for full disclaimer.

This drawing is the confidential and proprietary information of DIRTT Environmental Solutions Ltd. (DIRTT). Any reproduction, alteration, disclosure or use of this drawing other than as agreed to by DIRTT is expressly prohibited. Do not use drawing for sale purposes. All site dimensions, drawings, details, and specifications contained herein must be verified by sub-contractors and any discrepancies must be reported to DIRTT in writing before proceeding with work. See cover page of drawing package for full disclaimer.

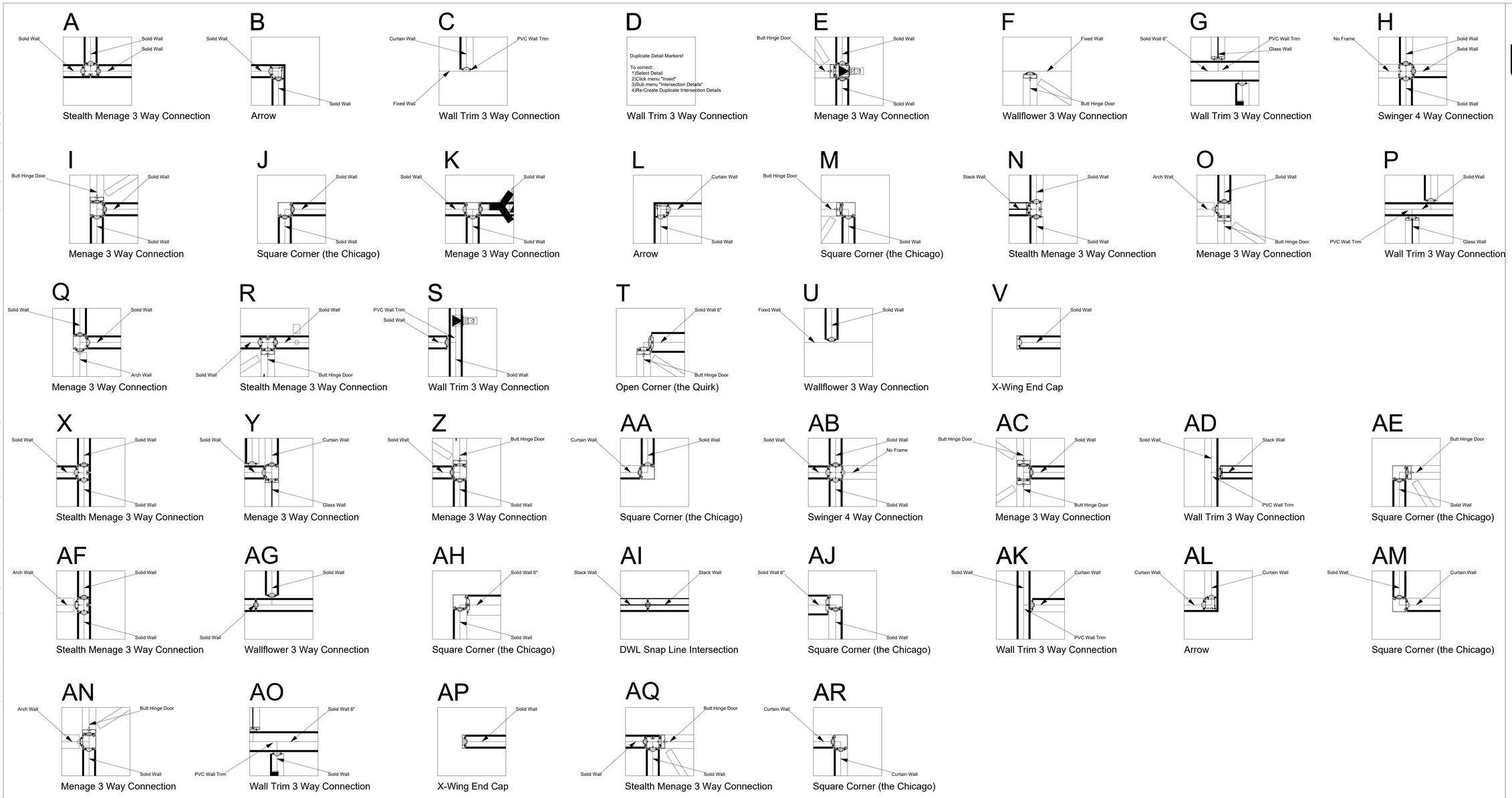

1 INTERSECTION DETAILS
DW-300.1

SCALE: 1" = 1'-0"

DIRTT Door Schedule

Tag	Style Name	Size	Handedness	Hardware Type	Closer Type	Stopper	Door Base Style	Finish Tag	Hardware Description	Center Location AFF	Door Track Type
HD37	Butt_Hinge_Door-Double	Height 9' - 7 7/16" X Width 3' - 1 1/2"	LH	Slim Pull Not Locking	None	Dome (Floor Location) S100-626	ADA	M6, M7, M9	72" x 56" C to C Bar Pull- 630 Stainless Steel Finish	72" x 56" C to C Bar Pull(4' - 11 7/8")	N/A
HD38	Butt_Hinge_Door-Double	Height 9' - 7 7/16" X Width 3' - 1 1/2"	RH	Slim Pull Not Locking	None	Dome (Floor Location) S100-626	ADA	M6, M7, M9	72" x 56" C to C Bar Pull- 630 Stainless Steel Finish	72" x 56" C to C Bar Pull(4' - 11 7/8")	N/A
HD39	Butt_Hinge_Door-A	Height 8' - 10 7/8" X Width 3' - 1"	LHR	COM	None	Dome (Floor Location) S100-626	N/A	M3	COM Door Hardware(COM)		N/A
HD40	Butt_Hinge_Door-A	Height 9' - 10 7/8" X Width 3' - 5"	LH	COM	None	Dome (Floor Location) S100-626	N/A	M3	COM Door Hardware(COM)		N/A
HD41	Butt_Hinge_Door-A	Height 9' - 10 7/8" X Width 3' - 1"	LH	COM	None	Dome (Floor Location) S100-626	N/A	M3	COM Door Hardware(COM)		N/A
HD42	Butt_Hinge_Door-A	Height 9' - 10 7/8" X Width 3' - 1"	LHR	COM	None	Dome (Floor Location) S100-626	N/A	M3	COM Door Hardware(COM)		N/A
HD43	Butt_Hinge_Door-Double	Height 9' - 10 7/8" X Width 3' - 1"	LH	COM	None	Dome (Floor Location) S100-626	N/A	M3	COM Door Hardware(COM)		N/A
HD44	Butt_Hinge_Door-Double	Height 9' - 10 7/8" X Width 3' - 1"	RH	COM	None	Dome (Floor Location) S100-626	N/A	M3	COM Door Hardware(COM)		N/A
HD45	Butt_Hinge_Door-A	Height 9' - 10 7/8" X Width 3' - 1"	RHR	COM	None	Dome (Floor Location) S100-626	N/A	M3	COM Door Hardware(COM)		N/A
HD46	Butt_Hinge_Door-A	Height 9' - 10 7/8" X Width 3' - 1"	RH	COM	None	Dome (Floor Location) S100-626	N/A	M3	COM Door Hardware(COM)		N/A
HD47	Butt_Hinge_Door-A	Height 9' - 10 7/8" X Width 3' - 1"	LH	COM	None	Dome (Floor Location) S100-626	N/A	M3	COM Door Hardware(COM)		N/A
HD48	Butt_Hinge_Door-A	Height 9' - 7 7/16" X Width 3' - 1"	LH	Slim Pull Not Locking	None	Dome (Floor Location) S100-626	ADA	M14, M7, M9	72" x 56" C to C Bar Pull- 630 Stainless Steel Finish	72" x 56" C to C Bar Pull(4' - 11 7/8")	N/A
HD49	Butt_Hinge_Door-A	Height 9' - 10 7/8" X Width 3' - 5"	RH	COM	None	Dome (Floor Location) S100-626	N/A	M3	COM Door Hardware(COM)		N/A
HD50	Butt_Hinge_Door-A	Height 9' - 10 7/8" X Width 3' - 1"	RH	COM	None	Dome (Floor Location) S100-626	N/A	M3	COM Door Hardware(COM)		N/A
HD51	Butt_Hinge_Door-A	Height 9' - 7 7/16" X Width 3' - 1"	RH	Slim Pull Not Locking	None	Dome (Floor Location) S100-626	ADA	M14, M7, M9	72" x 56" C to C Bar Pull- 630 Stainless Steel Finish	72" x 56" C to C Bar Pull(4' - 11 7/8")	N/A
HD52	Butt_Hinge_Door-A	Height 9' - 10 7/8" X Width 3' - 5"	RH	COM	None	Dome (Floor Location) S100-626	N/A	M3	COM Door Hardware(COM)		N/A

2 DOOR SCHEDULE
DW-300.1

DIRTT

PROJECT DETAILS/NOTES:

FRAME AND TRIM DETAILS

EXTRUSION PROFILE / WALL TYPE:
- [ ] CURVILINEAR
- [x] RECTILINEAR
- [ ] BLADE
- [ ] EVIL TWIN
- [ ] INSPIRE

FRAME FINISH:
- [x] ANODIZED ALUMINUM
- [ ] POWDER-COATED
- [ ] VENEER

BASE TRIM COLOR:
- [x] SILVER
- [ ] BLACK

PV/COLASS WIPE COLOR:
- [x] SILVER
- [ ] BLACK

REVEAL:
- [x] CLASSIC
- [ ] ENZO

COPLANAR:
- [x] NO
- [ ] YES

FLOOR, CEILING, AND SEISMIC DETAILS

FLOOR TYPE:
- [x] CARPET
- [ ] HARD SURFACE

WALL HEIGHT: 10'-0"
LOW WALL: 4'-0"
WEIGHT ROOM 25'-0"

CEILING TYPE:
- [ ] DRYWALL BULKHEAD
- [ ] CORNICE RAIL
- [ ] LOW WALL
- [x] GRID

GRID TYPE:
- [ ] 9/16"
- [x] 15/16"

TILE TYPE:
- [x] FLUSH
- [ ] CONCEALED
- [ ] TEGULAR

SEISMIC REQUIRED:
- [x] NO
- [ ] YES

HARDWARE REQUIREMENTS:

DOORS:
REFERENCE DOOR SCHEDULE FOR FURTHER DETAILS

ELECTRICAL PROVISION REQUIRED - SEE ELECTRICAL SHOP DRAWINGS

DATA PROVISION REQUIRED - SEE PON SHOP DRAWINGS

CASEWORK PROVISIONS REQUIRED - SEE CASEWORK SHOP DRAWINGS

ADDITIONAL NOTES:

DRAWING INDEX

DW-100.1-100.3	LEVEL 1 FLOOR PLANS
DW-100.4-100.6	LEVEL 2 FLOOR PLANS
DW-100.7-100.8	HIGHLIGHTED DIRTT SCOPE
DW-200.1-200.7	LEVEL 1 ELEVATIONS
DW-200.8-200.15	LEVEL 2 ELEVATIONS
DW-300.1	LEVEL 1 INTERSECTION DETAILS LEVEL 1 DOOR SCHEDULE
DW-300.2	LEVEL 2 INTERSECTION DETAILS LEVEL 2 DOOR SCHEDULE
DW-400.1-400.2	TYPICAL DIRTT DETAILS
DW-500.1-500.4	CEILING AND FLOOR AND EFFICIENCIES

Project Name:
GALENA PARK HIGH SCHOOL
FIELD HOUSE
LEVEL 1

Project Address:
1000 KEENE ST
GALENA PARK, TX
77547

DIRTT
CONSULTANT
SET

Project:	148501
Drawn by:	KA
Scale:	AS NOTED
Plot Date:	2025/06/10
Contact:	HEATHER KENNEY
Contact Number:	346-465-4114

INTERSECTION DETAILS &
DOOR SCHEDULE FIRST FLOOR

DW-300.1

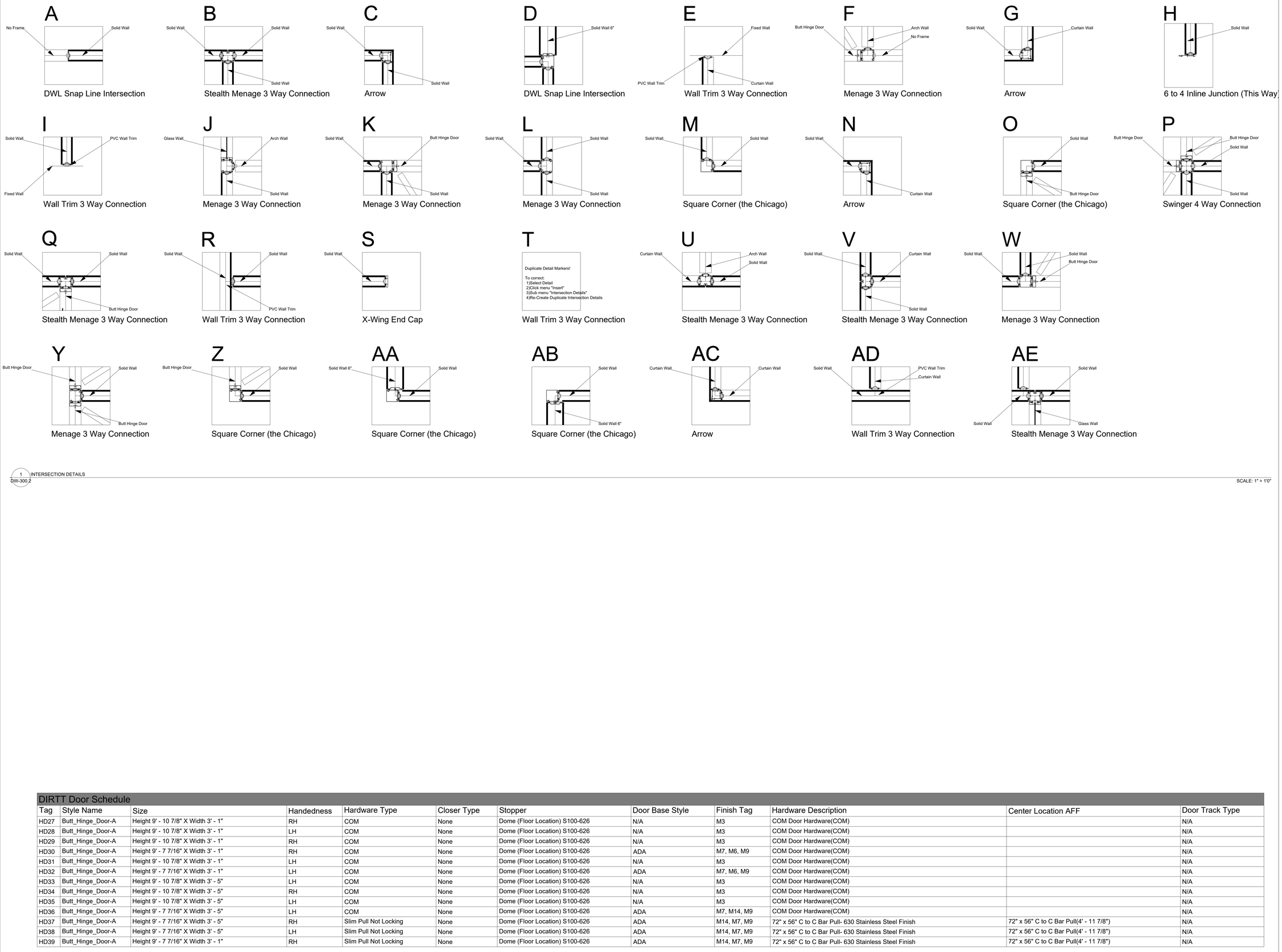

1 INTERSECTION DETAILS
DW-300.2

SCALE: 1" = 1'0"

DIRTT Door Schedule											
Tag	Style Name	Size	Handedness	Hardware Type	Closer Type	Stopper	Door Base Style	Finish Tag	Hardware Description	Center Location AFF	Door Track Type
HD27	Butt_Hinge_Door-A	Height 9' - 10 7/8" X Width 3' - 1"	RH	COM	None	Dome (Floor Location) S100-626	N/A	M3	COM Door Hardware(COM)		N/A
HD28	Butt_Hinge_Door-A	Height 9' - 10 7/8" X Width 3' - 1"	LH	COM	None	Dome (Floor Location) S100-626	N/A	M3	COM Door Hardware(COM)		N/A
HD29	Butt_Hinge_Door-A	Height 9' - 10 7/8" X Width 3' - 1"	RH	COM	None	Dome (Floor Location) S100-626	N/A	M3	COM Door Hardware(COM)		N/A
HD30	Butt_Hinge_Door-A	Height 9' - 7 7/16" X Width 3' - 1"	RH	COM	None	Dome (Floor Location) S100-626	ADA	M7, M6, M9	COM Door Hardware(COM)		N/A
HD31	Butt_Hinge_Door-A	Height 9' - 10 7/8" X Width 3' - 1"	LH	COM	None	Dome (Floor Location) S100-626	N/A	M3	COM Door Hardware(COM)		N/A
HD32	Butt_Hinge_Door-A	Height 9' - 7 7/16" X Width 3' - 1"	LH	COM	None	Dome (Floor Location) S100-626	ADA	M7, M6, M9	COM Door Hardware(COM)		N/A
HD33	Butt_Hinge_Door-A	Height 9' - 10 7/8" X Width 3' - 5"	LH	COM	None	Dome (Floor Location) S100-626	N/A	M3	COM Door Hardware(COM)		N/A
HD34	Butt_Hinge_Door-A	Height 9' - 10 7/8" X Width 3' - 5"	RH	COM	None	Dome (Floor Location) S100-626	N/A	M3	COM Door Hardware(COM)		N/A
HD35	Butt_Hinge_Door-A	Height 9' - 10 7/8" X Width 3' - 5"	LH	COM	None	Dome (Floor Location) S100-626	N/A	M3	COM Door Hardware(COM)		N/A
HD36	Butt_Hinge_Door-A	Height 9' - 7 7/16" X Width 3' - 5"	LH	COM	None	Dome (Floor Location) S100-626	ADA	M7, M14, M9	COM Door Hardware(COM)		N/A
HD37	Butt_Hinge_Door-A	Height 9' - 7 7/16" X Width 3' - 5"	RH	Slim Pull Not Locking	None	Dome (Floor Location) S100-626	ADA	M14, M7, M9	72" x 56" C to C Bar Pull- 630 Stainless Steel Finish	72" x 56" C to C Bar Pull(4' - 11 7/8")	N/A
HD38	Butt_Hinge_Door-A	Height 9' - 7 7/16" X Width 3' - 5"	LH	Slim Pull Not Locking	None	Dome (Floor Location) S100-626	ADA	M14, M7, M9	72" x 56" C to C Bar Pull- 630 Stainless Steel Finish	72" x 56" C to C Bar Pull(4' - 11 7/8")	N/A
HD39	Butt_Hinge_Door-A	Height 9' - 7 7/16" X Width 3' - 1"	RH	Slim Pull Not Locking	None	Dome (Floor Location) S100-626	ADA	M14, M7, M9	72" x 56" C to C Bar Pull- 630 Stainless Steel Finish	72" x 56" C to C Bar Pull(4' - 11 7/8")	N/A

1 DOOR SCHEDULE
DW-300.2

DIRTT™

PROJECT DETAILS/NOTES:

FRAME AND TRIM DETAILS

EXTRUSION PROFILE / WALL TYPE:
- ☐ CURVILINEAR
- ☑ RECTILINEAR
- ☐ BLADE
- ☐ EVIL TWIN
- ☐ INSPIRE

FRAME FINISH:
- ☑ ANODIZED ALUMINUM
- ☐ POWDER-COATED
- ☐ VENEER

BASE TRIM COLOR:
- ☑ SILVER
- ☐ BLACK

PVC/GLASS WIPE COLOR:
- ☑ SILVER
- ☐ BLACK

REVEAL:
- ☑ CLASSIC
- ☐ ENZO

COPLANAR:
- ☑ NO
- ☐ YES

FLOOR, CEILING, AND SEISMIC DETAILS

FLOOR TYPE:
- ☑ CARPET
- ☐ HARD SURFACE

WALL HEIGHT: 10'-6"
WEIGHT ROOM: 25'-0"

CEILING TYPE:
- ☐ DRYWALL BULKHEAD
- ☐ CORNICE RAIL
- ☐ LOW WALL
- ☑ GRID

GRID TYPE:
- ☐ 9/16"
- ☑ 15/16"

TILE TYPE:
- ☑ FLUSH
- ☐ CONCEALED
- ☐ TEGULAR

SEISMIC REQUIRED:
- ☑ NO
- ☐ YES

HARDWARE REQUIREMENTS:

DOORS:
REFERENCE DOOR SCHEDULE FOR FURTHER DETAILS

ELECTRICAL PROVISION REQUIRED - SEE ELECTRICAL SHOP DRAWINGS

DATA PROVISION REQUIRED - SEE PON SHOP DRAWINGS

CASEWORK PROVISIONS REQUIRED - SEE CASEWORK SHOP DRAWINGS

ADDITIONAL NOTES:

DRAWING INDEX

DW-100.1-100.3	LEVEL 1 FLOOR PLANS
DW-100.4-100.6	LEVEL 2 FLOOR PLANS
DW-100.7-100.8	HIGHLIGHTED DIRTT SCOPE
DW-200.1-200.7	LEVEL 1 ELEVATIONS
DW-200.8-200.15	LEVEL 2 ELEVATIONS
DW-300.1	LEVEL 1 INTERSECTION DETAILS LEVEL 1 DOOR SCHEDULE
DW-300.2	LEVEL 2 INTERSECTION DETAILS LEVEL 2 DOOR SCHEDULE
DW-400.1-400.2	TYPICAL DIRTT DETAILS
DW-500.1-500.4	CEILING AND FLOOR EFFICIENCIES

Project Name:
GALENA PARK HIGH SCHOOL
FIELD HOUSE
LEVEL 2

Project Address:
1000 KEENE ST
GALENA PARK, TX
77547

DIRTT CONSULTANT SET

Rev	Date	Revision	Initial
-	04JUN25	95% CDS	KA
1	09JUN25	95% CDS (Rev 1)	KA
2	10JUN25	95% CDS (Rev 2)	KA

Project:	148501
Drawn by:	KA
Scale:	AS NOTED
Plot Date:	2025/06/10
Contact:	HEATHER KENNEY
Contact Number:	346-465-4114

INTERSECTION DETAILS & DOOR SCHEDULE SECOND FLOOR

DW-300.2

This drawing is the confidential and proprietary information of DIRTT Environmental Solutions Ltd. (DIRTT). Any reproduction, alteration, disclosure or use of this drawing other than as agreed to by DIRTT is expressly prohibited. Do not use drawing for cutting purposes. All dimensions, drawings, details, and specifications contained herein must be verified by sub-contractors and any discrepancies must be reported to DIRTT in writing before proceeding with work. See cover page of drawing package for full disclaimer.

C:\Users\SWILLI~1\AppData\Local\Temp\ICEcad-fb8ac0e7-7dbd-4050-b194-d2e24fd8a0f2\ICEcad.dwg 2025-6-10 1:38:44 PM

WATER CLOSET AT DIRTT WALL

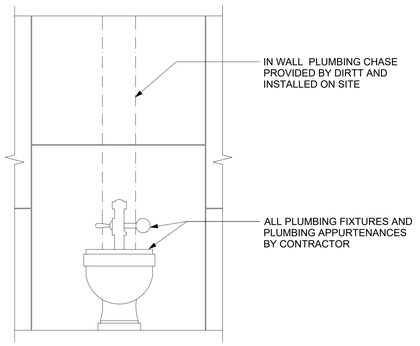

1 WATER CLOSET AT DIRTT WALL
DW-400.1 NOT TO SCALE

WALL HUNG LAVATORY AT DIRTT WALL

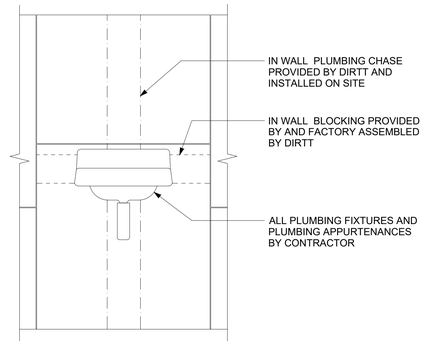

2 WALL HUNG LAVATORY AT DIRTT WALL
DW-400.1 NOT TO SCALE

WALL HUNG EQUIPMENT & ACCESSORIES AT DIRTT WALL

TYPICALLY PROVIDED FOR ITEMS THAT CANNOT BE HUNG FROM A REVEAL SUCH AS: MONITORS, WALL MOUNTED WORK STATIONS AND GRAB BARS. IN WALL BLOCKING IS ADJUSTED AND MAY BE ORIENTED HORIZONTALLY OR VERTICALLY.

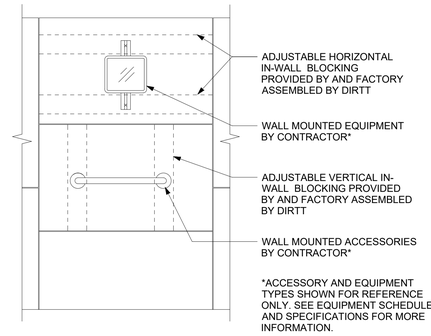

3 WALL HUNG EQUIPMENT AT DIRTT WALL
DW-400.1 NOT TO SCALE

GENERAL NOTES

1. SEE SPECIFICATION 13 42 75 INTEGRATED INTERIOR ASSEMBLIES FOR MORE INFORMATION.
2. SEE ARCHITECTURAL AND ENGINEERING DRAWINGS AND SPECIFICATIONS FOR MORE INFORMATION.
3. MATERIALS AND/OR ASSEMBLIES ON THIS SHEET INDICATING THAT THEY ARE **"PROVIDED BY DIRTT"** SHALL BE INCLUDED IN THE MATERIAL COSTS CAPTURED BY DIRTT.
4. MATERIALS AND/OR ASSEMBLIES ON THIS SHEET INDICATING THAT THEY ARE **"INSTALLED ON SITE"** SHALL BE INCLUDED IN THE LABOR COSTS OF THE **D**IRTT **C**ERTIFIED **C**ONTRACTOR (**DCC**).
5. MATERIALS AND/OR ASSEMBLIES ON THIS SHEET INDICATING **"PROVIDED BY AND FACTORY ASSEMBLED BY DIRTT"** WILL ARRIVE ON SITE FULLY ASSEMBLED WITHIN DIRTT FRAMES. MATERIAL AND LABOR COSTS SHALL BE CAPTURED BY DIRTT.
6. MATERIALS, ASSEMBLIES AND/OR LABOR ON THIS SHEET INDICATING **"BY CONTRACTOR"** ARE NOT PROVIDED BY DIRTT OR THE DIRTT CERTIFIED CONTRACTOR AND SHALL BE INCLUDED IN THE SCOPE OF THE APPROPRIATE BIDDER.
7. MATERIALS AND/OR ASSEMBLIES ON THIS SHEET INDICATING THAT THEY ARE **"PROVIDED BY DIRTT AND INSTALLED BY CONTRACTOR"** SHALL BE INCLUDED IN DIRTT'S MATERIAL COSTS AND LABOR SHALL BE INCLUDED IN THE COSTS OF THE APPROPRIATE BIDDER.

ABBREVIATIONS

CCF CLOSED CELL FOAM
DCC DIRTT CERTIFIED CONTRACTOR

DEFINITIONS

DIRTT CERTIFIED CONTRACTOR: PERSON OR COMPANY THAT HAS BEEN TRAINED BY DIRTT TO CONSTRUCT AND/OR INSTALL DIRTT SOLUTIONS.

DIRTT™

PROJECT DETAILS/NOTES:

FRAME AND TRIM DETAILS

EXTRUSION PROFILE / WALL TYPE:
- [ ] CURVILINEAR
- [x] RECTILINEAR
- [ ] BLADE
- [ ] EVIL TWIN
- [ ] INSPIRE

FRAME FINISH:
- [x] ANODIZED ALUMINUM
- [ ] POWDER-COATED
- [ ] VENEER

BASE TRIM COLOR:
- [x] SILVER
- [ ] BLACK

PVC/GLASS WIPE COLOR:
- [x] SILVER
- [ ] BLACK

REVEAL:
- [x] CLASSIC
- [ ] ENZO

COPLANAR:
- [x] NO
- [ ] YES

FLOOR, CEILING, AND SEISMIC DETAILS

FLOOR TYPE:
- [x] CARPET
- [ ] HARD SURFACE

WALL HEIGHT: 10'-0"
LOW WALL: 4'-0"
WEIGHT ROOM 25'-0"

CEILING TYPE:
- [ ] DRYWALL BULKHEAD
- [ ] CORNICE RAIL
- [ ] LOW WALL
- [x] GRID

GRID TYPE:
- [ ] 9/16"
- [x] 15/16"

TILE TYPE:
- [x] FLUSH
- [ ] CONCEALED
- [ ] TEGULAR

SEISMIC REQUIRED:
- [x] NO
- [ ] YES

HARDWARE REQUIREMENTS:

DOORS:
REFERENCE DOOR SCHEDULE FOR FURTHER DETAILS

ELECTRICAL PROVISION REQUIRED - SEE ELECTRICAL SHOP DRAWINGS

DATA PROVISION REQUIRED - SEE PON SHOP DRAWINGS

CASEWORK PROVISIONS REQUIRED - SEE CASEWORK SHOP DRAWINGS

ADDITIONAL NOTES:

DRAWING INDEX

DW-100.1-100.3	LEVEL 1 FLOOR PLANS
DW-100.4-100.6	LEVEL 2 FLOOR PLANS
DW-100.7-100.8	HIGHLIGHTED DIRTT SCOPE
DW-200.1-200.7	LEVEL 1 ELEVATIONS
DW-200.8-200.15	LEVEL 2 ELEVATIONS
DW-300.1	LEVEL 1 INTERSECTION DETAILS LEVEL 1 DOOR SCHEDULE
DW-300.2	LEVEL 2 INTERSECTION DETAILS LEVEL 2 DOOR SCHEDULE
DW-400.1-400.2	TYPICAL DIRTT DETAILS
DW-500.1-500.4	CEILING AND FLOOR AND EFFICIENCIES

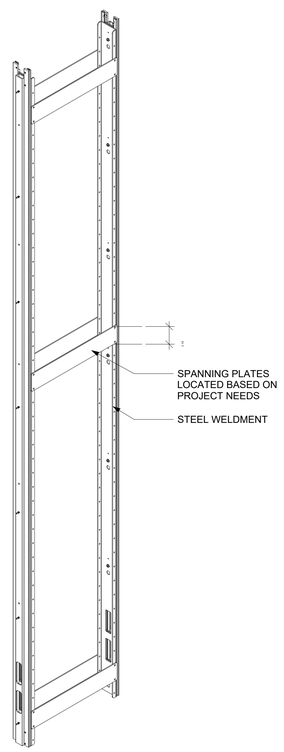

4 DIRTT MECHANICAL CHASE - 4 INCH WALL
DW-400.1 NOT TO SCALE

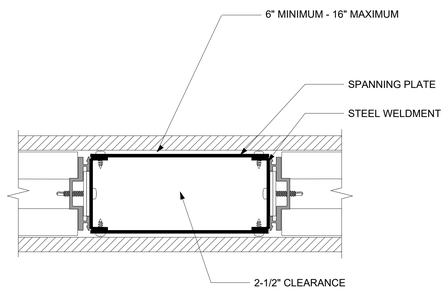

5 MECHANICAL CHASE PLAN DETAIL - 4 INCH WALL
DW-400.1 NOT TO SCALE

RECESSED TV/DISPLAY MONITOR AT DIRTT WALL - POWER CHASSIS MODULAR

TYPICALLY PROVIDED FOR ITEMS SUCH AS: TELEVISIONS OR MONITORS THAT ARE TO BE LOCATED BEHIND GLASS. USEFUL FOR LOCATIONS WHERE HEADWALLS AND FOOTWALLS ARE BACK TO BACK.

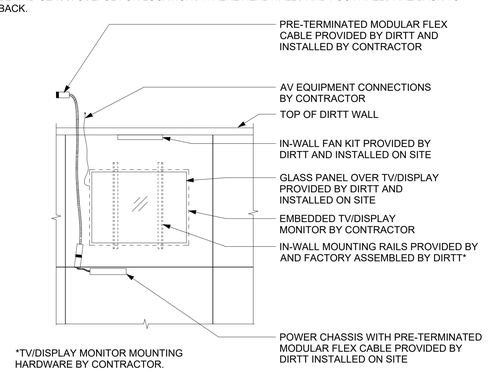

6 RECESSED TV DISPLAY MONITOR IN DIRTT WALL W/ POWER CHASIS
DW-400.1 NOT TO SCALE

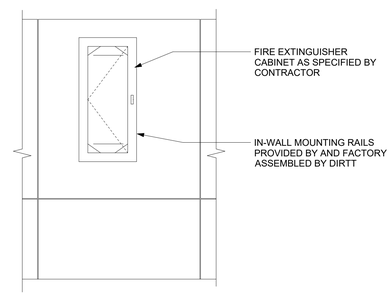

7 FIRE EXTINGUISHER CABINET AT DIRTT WALL
DW-400.1 NOT TO SCALE

ARCHITECTURAL - PREFAB WALLS

ALL WALLS LABELED OR TAGGED AS DIRTT AND/OR DEMOUNTABLE PARTITIONS

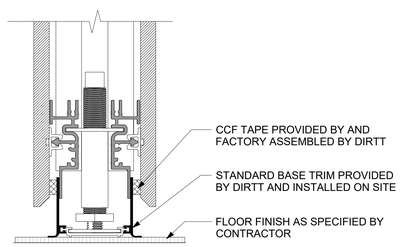

8 DIRTT WALL WITH STANDARD BASE - SECTION
DW-400.1 NOT TO SCALE

ARCHITECTURAL - PREFAB WALLS

ALL WALLS LABELED OR TAGGED AS DIRTT AND/OR DEMOUNTABLE PARTITIONS

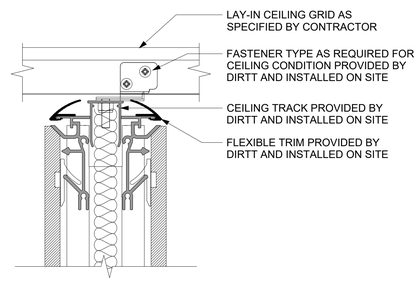

9 DIRTT WALL UNDER LAY-IN CEILING HEADER - SECTION
DW-400.1 NOT TO SCALE

Project Name:

GALENA PARK HIGH SCHOOL
FIELD HOUSE
LEVEL 1

Project Address:

1000 KEENE ST
GALENA PARK, TX
77547

DIRTT CONSULTANT SET

-	04JUN25	95% CD	KA
1	09JUN25	95% CD (Rev 1)	KA
2	10JUN25	95% CD (Rev 2)	KA

Project:	148501
Drawn by:	KA
Scale:	AS NOTED
Plot Date:	2025/06/10
Contact:	HEATHER KENNEY
Contact Number:	346-465-4114

TYPICAL WALL DETAILS

DW-400.1

This drawing is the confidential and proprietary information of DIRTT Environmental Solutions Ltd. (DIRTT). Any reproduction, alteration, disclosure or use of this drawing other than as agreed to by DIRTT is expressly prohibited. Do not use drawing for sale purposes. All dim dimensions, drawings, details, and specifications contained herein must be verified by sub-contractors and any discrepancies must be reported to DIRTT in writing before proceeding with work. See cover page of drawing package for full disclaimer.

C:\Users\SWILLI~1\AppData\Local\Temp\ICEcad-b590f7d8-0cc1-4e45-80ff-df251e13a6c8\ICEcad.dwg 2025-6-10 12:39:16 PM

This drawing is the confidential and proprietary information of DIRTT Environmental Solutions Ltd. (DIRTT). Any reproduction, alteration, disclosure or use of this drawing other than as agreed to by DIRTT is expressly prohibited. Do not use drawing for safe purposes. All dimensions, drawings, details, and specifications contained herein must be verified by sub-contractors and any discrepancies must be reported to DIRTT in writing before proceeding with work. See cover page of drawing package for full disclaimer.

DIRTT POWER COMPONENT DRAWING CEILING

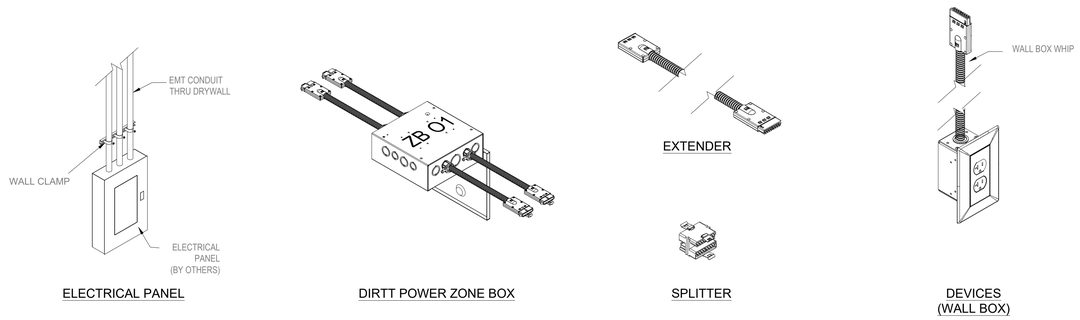

ELECTRICAL PANEL | DIRTT POWER ZONE BOX | SPLITTER | DEVICES (WALL BOX)

CONTRACTOR SUPPLIED & INSTALLED | DIRTT SUPPLIED, SEE SCOPE OF WORK DOCUMENT

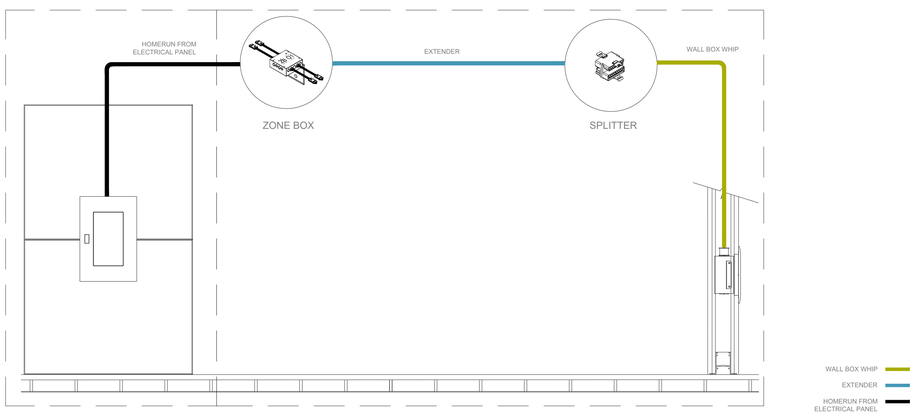

1 ZONE BOX COMPONENT - CEILING
DW-400.2 NOT TO SCALE

GENERAL NOTES

1. SEE SPECIFICATION 13 42 75 INTEGRATED INTERIOR ASSEMBLIES FOR MORE INFORMATION.
2. SEE ARCHITECTURAL AND ENGINEERING DRAWINGS AND SPECIFICATIONS FOR MORE INFORMATION.
3. MATERIALS AND/OR ASSEMBLIES ON THIS SHEET INDICATING THAT THEY ARE **"PROVIDED BY DIRTT"** SHALL BE INCLUDED IN THE MATERIAL COSTS CAPTURED BY DIRTT.
4. MATERIALS AND/OR ASSEMBLIES ON THIS SHEET INDICATING THAT THEY ARE **"INSTALLED ON SITE"** SHALL BE INCLUDED IN THE LABOR COSTS OF THE **D**IRTT **C**ERTIFIED **C**ONTRACTOR (**DCC**).
5. MATERIALS AND/OR ASSEMBLIES ON THIS SHEET INDICATING **"PROVIDED BY AND FACTORY ASSEMBLED BY DIRTT"** WILL ARRIVE ON SITE FULLY ASSEMBLED WITHIN DIRTT FRAMES. MATERIAL AND LABOR COSTS SHALL BE CAPTURED BY DIRTT
6. MATERIALS, ASSEMBLIES AND/OR LABOR ON THIS SHEET INDICATING **"BY CONTRACTOR"** ARE NOT PROVIDED BY DIRTT OR THE DIRTT CERTIFIED CONTRACTOR AND SHALL BE INCLUDED IN THE SCOPE OF THE APPROPRIATE BIDDER.
7. MATERIALS AND/OR ASSEMBLIES ON THIS SHEET INDICATING THAT THEY ARE **"PROVIDED BY DIRTT AND INSTALLED BY CONTRACTOR"** SHALL BE INCLUDED IN DIRTT'S MATERIAL COSTS AND LABOR SHALL BE INCLUDED IN THE COSTS OF THE APPROPRIATE BIDDER.

ABBREVIATIONS

CCF CLOSED CELL FOAM
DCC DIRTT CERTIFIED CONTRACTOR

DEFINITIONS

DIRTT CERTIFIED CONTRACTOR: PERSON OR COMPANY THAT HAS BEEN TRAINED BY DIRTT TO CONSTRUCT AND/OR INSTALL DIRTT SOLUTIONS.

DIRTT™

PROJECT DETAILS/NOTES:

FRAME AND TRIM DETAILS

EXTRUSION PROFILE / WALL TYPE:
- ☐ CURVILINEAR
- ✓ RECTILINEAR
- ☐ BLADE
- ☐ EVIL TWIN
- ☐ INSPIRE

FRAME FINISH:
- ✓ ANODIZED ALUMINUM
- ☐ POWDER-COATED
- ☐ VENEER

BASE TRIM COLOR:
- ✓ SILVER
- ☐ BLACK

PVC/GLASS WIPE COLOR:
- ✓ SILVER
- ☐ BLACK

REVEAL:
- ✓ CLASSIC
- ☐ ENZO

COPLANAR:
- ✓ NO
- ☐ YES

FLOOR, CEILING, AND SEISMIC DETAILS

FLOOR TYPE:
- ✓ CARPET
- ☐ HARD SURFACE

WALL HEIGHT: 10'-0"
LOW WALL: 4'-0"
WEIGHT ROOM 25'-0"

CEILING TYPE:
- ☐ DRYWALL BULKHEAD
- ☐ CORNICE RAIL
- ☐ LOW WALL
- ✓ GRID

GRID TYPE:
- ☐ 9/16"
- ✓ 15/16"

TILE TYPE:
- ✓ FLUSH
- ☐ CONCEALED
- ☐ TEGULAR

SEISMIC REQUIRED:
- ✓ NO
- ☐ YES

HARDWARE REQUIREMENTS:

DOORS:
REFERENCE DOOR SCHEDULE FOR FURTHER DETAILS

ELECTRICAL PROVISION REQUIRED - SEE ELECTRICAL SHOP DRAWINGS

DATA PROVISION REQUIRED - SEE PON SHOP DRAWINGS

CASEWORK PROVISIONS REQUIRED - SEE CASEWORK SHOP DRAWINGS

ADDITIONAL NOTES:

DRAWING INDEX

DW-100.1-100.3	LEVEL 1 FLOOR PLANS
DW-100.4-100.6	LEVEL 2 FLOOR PLANS
DW-100.7-100.8	HIGHLIGHTED DIRTT SCOPE
DW-200.1-200.7	LEVEL 1 ELEVATIONS
DW-200.8-200.15	LEVEL 2 ELEVATIONS
DW-300.1	LEVEL 1 INTERSECTION DETAILS LEVEL 1 DOOR SCHEDULE
DW-300.2	LEVEL 2 INTERSECTION DETAILS LEVEL 2 DOOR SCHEDULE
DW-400.1-400.2	TYPICAL DIRTT DETAILS
DW-500.1-500.4	CEILING AND FLOOR AND EFFICIENCIES

DIRTT BACK BOXES AND CONDUIT

TYPICALLY PROVIDED FOR ITEMS SUCH AS: LIGHT SWITCHES, WALL MOUNTED LUMINARIES, ETC.

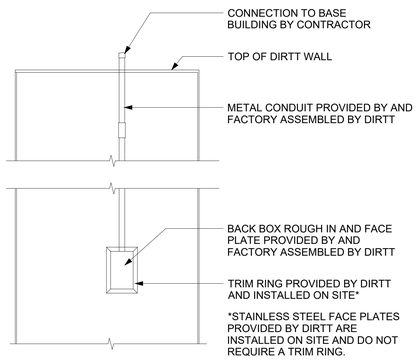

2 DIRTT BACK BOX AND MFR CONDUIT
DW-400.2 NOT TO SCALE

CONV BACK BOX - TELECOM ASSEMBLY WITH MFR CONDUIT

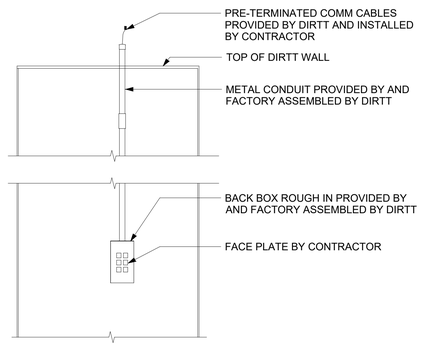

3 DIRTT BACK BOX -TELECOM ASSEMBLY WITH MFR CONDUIT
DW-400.2 NOT TO SCALE

MODULAR POWER - QUICK CONNECT

TYPICALLY PROVIDED FOR ITEMS SUCH AS: NORMAL POWER DROPS AND OVERHEAD/UNDER FLOOR MODULAR ZONE DISTRIBUTION. QUICK CONNECT MODULAR WHIPS ARE GANGED TOGETHER AT ZONE BOXES AND/OR JUNCTION BOXES.

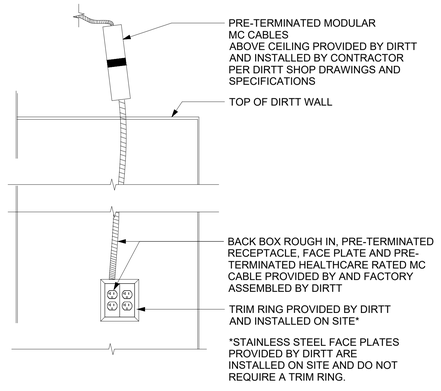

4 DIRTT BACK BOX - MODULAR POWER ASSEMBLY
DW-400.2 NOT TO SCALE

MODULAR DIRTT JUNCTION BOX - "PATIENT CARE POWER ZONE BOX"

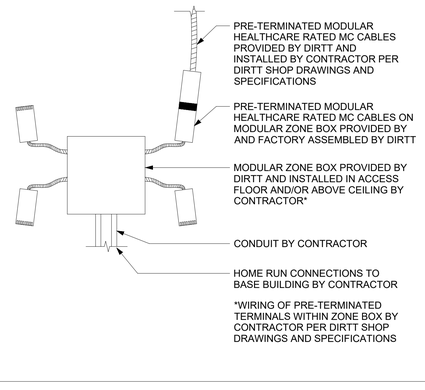

5 DIRTT BACK BOX - MODULAR POWER ASSEMBLY
DW-400.2 NOT TO SCALE

Project Name:
GALENA PARK HIGH SCHOOL
FIELD HOUSE
LEVEL 1

Project Address:
1000 KEENE ST
GALENA PARK, TX
77547

DIRTT CONSULTANT SET

-	04JUN25	95% CD	KA
1	09JUN25	95% CD (Rev 1)	KA
2	10JUN25	95% CD (Rev 2)	KA

Project:	148501
Drawn by:	KA
Scale:	AS NOTED
Plot Date:	2025/06/10
Contact:	HEATHER KENNEY
Contact Number:	346-465-4114

TYPICAL POWER DETAILS

DW-400.2

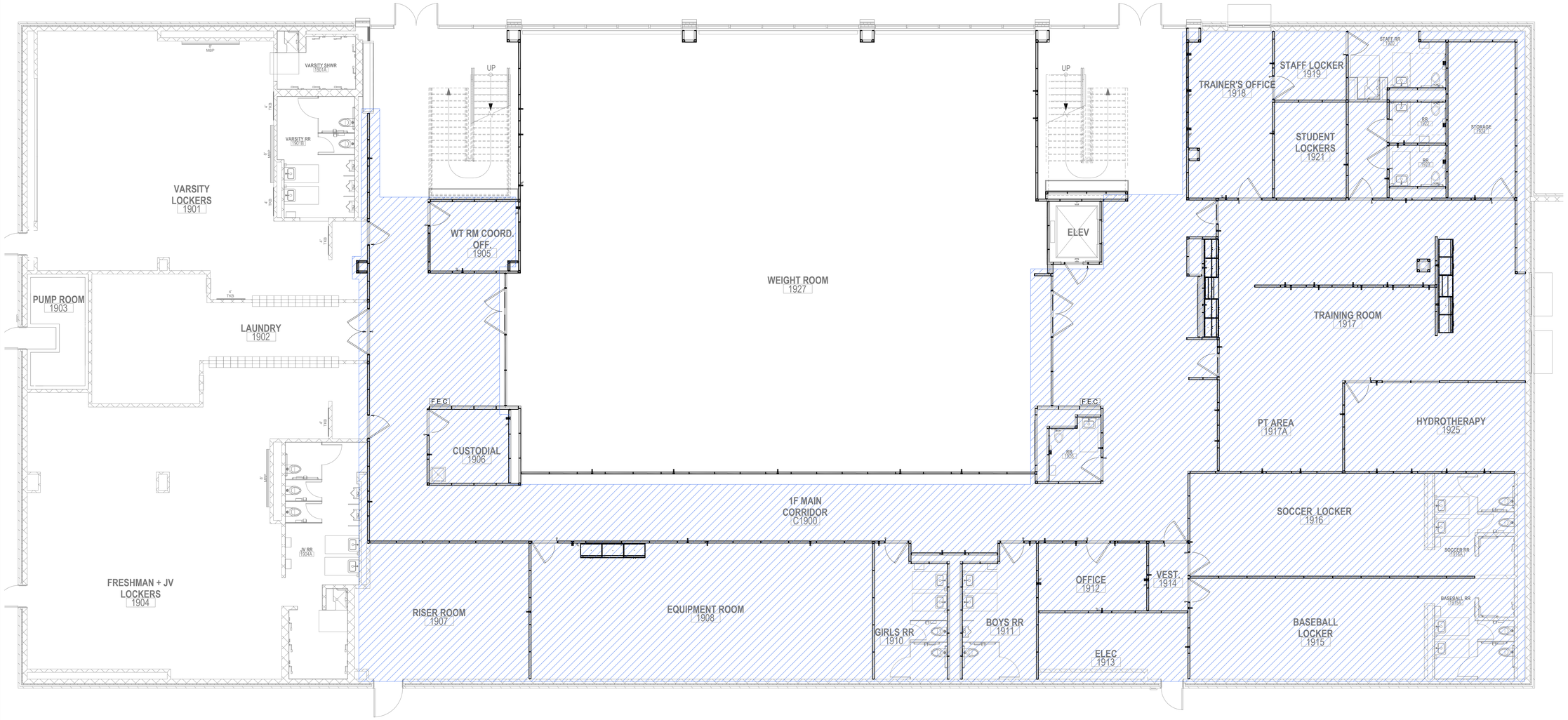

1 FLOOR PLAN
DW-500.1

NOT TO SCALE

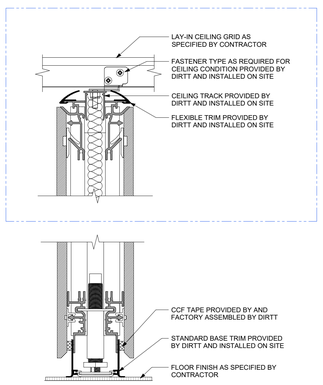

2 DIRTT WALL CEILING AND BASE DETAIL - SECTION
DW-500.1

NOT TO SCALE

DIRTT™

PROJECT DETAILS/NOTES:

FRAME AND TRIM DETAILS

EXTRUSION PROFILE / WALL TYPE:
- ☐ CURVILINEAR
- ✓ RECTILINEAR
- ☐ BLADE
- ☐ EVIL TWIN
- ☐ INSPIRE

FRAME FINISH:
- ✓ ANODIZED ALUMINUM
- ☐ POWDER-COATED
- ☐ VENEER

BASE TRIM COLOR:
- ✓ SILVER
- ☐ BLACK

PVC/GLASS WIPE COLOR:
- ✓ SILVER
- ☐ BLACK

REVEAL:
- ✓ CLASSIC
- ☐ ENZO

COPLANAR:
- ✓ NO
- ☐ YES

FLOOR, CEILING, AND SEISMIC DETAILS

FLOOR TYPE:
- ✓ CARPET
- ☐ HARD SURFACE

WALL HEIGHT: 10'-0"
LOW WALL: 4'-0"
WEIGHT ROOM 25'-0"

CEILING TYPE:
- ☐ DRYWALL BULKHEAD
- ☐ CORNICE RAIL
- ☐ LOW WALL
- ✓ GRID

GRID TYPE:
- ☐ 9/16"
- ✓ 15/16"

TILE TYPE:
- ✓ FLUSH
- ☐ CONCEALED
- ☐ TEGULAR

SEISMIC REQUIRED:
- ✓ NO
- ☐ YES

HARDWARE REQUIREMENTS:

DOORS:
REFERENCE DOOR SCHEDULE FOR FURTHER DETAILS

ELECTRICAL PROVISION REQUIRED - SEE ELECTRICAL SHOP DRAWINGS

DATA PROVISION REQUIRED - SEE PON SHOP DRAWINGS

CASEWORK PROVISIONS REQUIRED - SEE CASEWORK SHOP DRAWINGS

ADDITIONAL NOTES:

DRAWING INDEX

DW-100.1-100.3	LEVEL 1 FLOOR PLANS
DW-100.4-100.6	LEVEL 2 FLOOR PLANS
DW-100.7-100.8	HIGHLIGHTED DIRTT SCOPE
DW-200.1-200.7	LEVEL 1 ELEVATIONS
DW-200.8-200.15	LEVEL 2 ELEVATIONS
DW-300.1	LEVEL 1 INTERSECTION DETAILS
	LEVEL 1 DOOR SCHEDULE
DW-300.2	LEVEL 2 INTERSECTION DETAILS
	LEVEL 2 DOOR SCHEDULE
DW-400.1-400.2	TYPICAL DIRTT DETAILS
DW-500.1-500.4	CEILING AND FLOOR AND EFFICIENCIES

Project Name:

GALENA PARK HIGH SCHOOL
FIELD HOUSE
LEVEL 1

Project Address:

1000 KEENE ST
GALENA PARK, TX
77547

DIRTT CONSULTANT SET

-	04JUN25	95% CD	KA
1	09JUN25	95% CD (Rev 1)	KA
2	10JUN25	95% CD (Rev 2)	KA

Project:	148501
Drawn by:	KA
Scale:	AS NOTED
Plot Date:	2025/06/10
Contact:	HEATHER KENNEY
Contact Number:	346-465-4114

CEILING EFFICIENCIES
FIRST FLOOR

DW-500.1

This drawing is the confidential and proprietary information of DIRTT Environmental Solutions Ltd. (DIRTT). Any reproduction, alteration, disclosure or use of this drawing other than as agreed to by DIRTT is expressly prohibited. Do not use drawing for sale purposes. All site dimensions, drawings, details, and specifications contained herein must be verified by sub-contractors and any discrepancies must be reported to DIRTT in writing before proceeding with work. See cover page of drawing package for full disclaimer.

C:\Users\SWILLI~1\AppData\Local\Temp\ICEcad-b590ff7d8-0cc1-4e45-80ffdf251e13a6c8\ICEcad.dwg 2025-6-10 12:39:44 PM

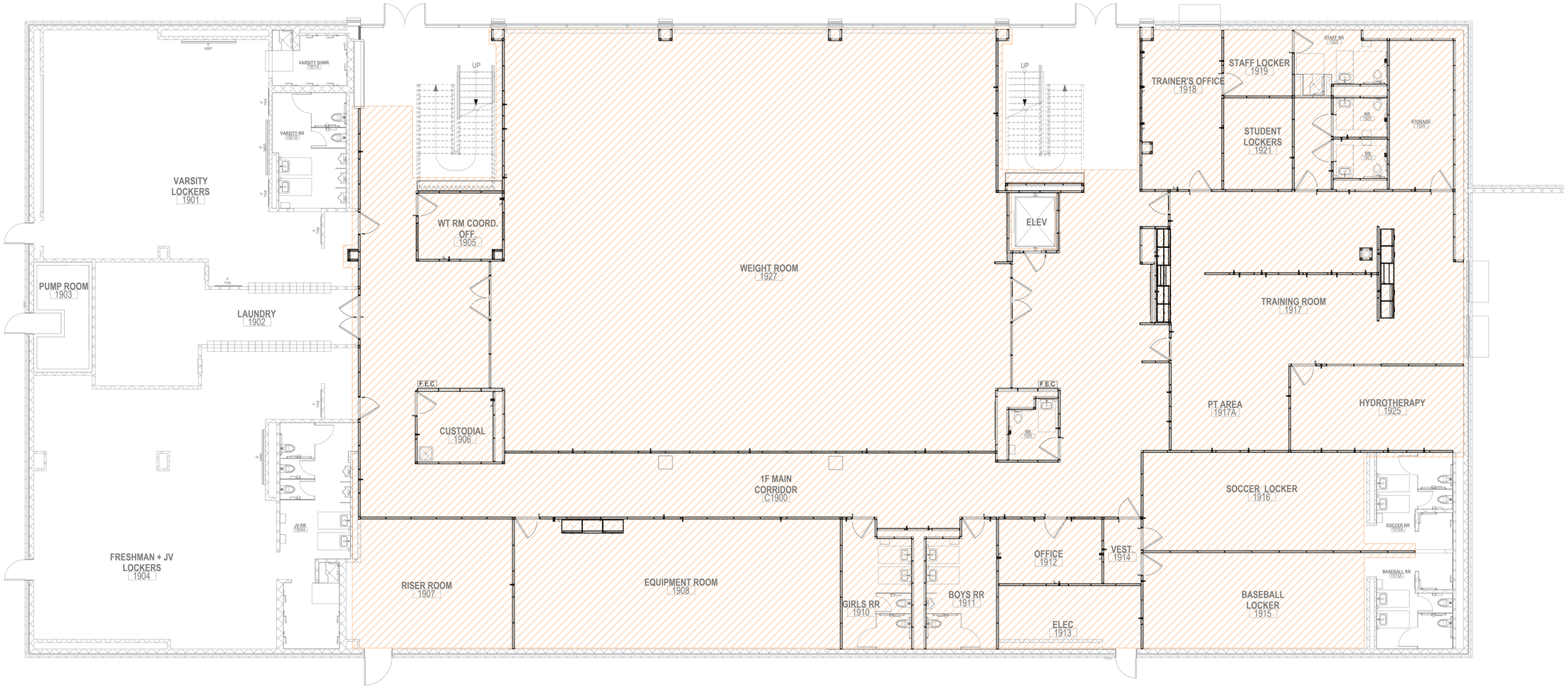

1 FLOOR PLAN
DW-500.2

NOT TO SCALE

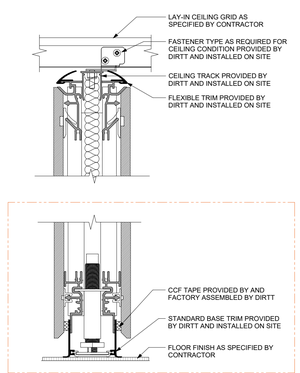

2 DIRTT WALL CEILING AND BASE DETAIL - SECTION
DW-500.2

NOT TO SCALE

DIRTT™

PROJECT DETAILS/NOTES:

FRAME AND TRIM DETAILS

EXTRUSION PROFILE / WALL TYPE:
- ☐ CURVILINEAR
- ✓ RECTILINEAR
- ☐ BLADE
- ☐ EVIL TWIN
- ☐ INSPIRE

FRAME FINISH:
- ✓ ANODIZED ALUMINUM
- ☐ POWDER-COATED
- ☐ VENEER

BASE TRIM COLOR:
- ✓ SILVER
- ☐ BLACK

PVC/GLASS WIPE COLOR:
- ✓ SILVER
- ☐ BLACK

REVEAL:
- ✓ CLASSIC
- ☐ ENZO

COPLANAR:
- ✓ NO
- ☐ YES

FLOOR, CEILING, AND SEISMIC DETAILS

FLOOR TYPE:
- ✓ CARPET
- ☐ HARD SURFACE

WALL HEIGHT: 10'-0"
LOW WALL: 4'-0"
WEIGHT ROOM 25'-0"

CEILING TYPE:
- ☐ DRYWALL BULKHEAD
- ☐ CORNICE RAIL
- ☐ LOW WALL
- ✓ GRID

GRID TYPE:
- ☐ 9/16"
- ✓ 15/16"

TILE TYPE:
- ✓ FLUSH
- ☐ CONCEALED
- ☐ TEGULAR

SEISMIC REQUIRED:
- ✓ NO
- ☐ YES

HARDWARE REQUIREMENTS:

DOORS:
REFERENCE DOOR SCHEDULE FOR FURTHER DETAILS

ELECTRICAL PROVISION REQUIRED - SEE ELECTRICAL SHOP DRAWINGS

DATA PROVISION REQUIRED - SEE PON SHOP DRAWINGS

CASEWORK PROVISIONS REQUIRED - SEE CASEWORK SHOP DRAWINGS

ADDITIONAL NOTES:

DRAWING INDEX

DW-100.1-100.3	LEVEL 1 FLOOR PLANS
DW-100.4-100.6	LEVEL 2 FLOOR PLANS
DW-100.7-100.8	HIGHLIGHTED DIRTT SCOPE
DW-200.1-200.7	LEVEL 1 ELEVATIONS
DW-200.8-200.15	LEVEL 2 ELEVATIONS
DW-300.1	LEVEL 1 INTERSECTION DETAILS LEVEL 1 DOOR SCHEDULE
DW-300.2	LEVEL 2 INTERSECTION DETAILS LEVEL 2 DOOR SCHEDULE
DW-400.1-400.2	TYPICAL DIRTT DETAILS
DW-500.1-500.4	CEILING AND FLOOR AND EFFICIENCIES

Project Name:

GALENA PARK HIGH SCHOOL
FIELD HOUSE
LEVEL 1

Project Address:

1000 KEENE ST
GALENA PARK, TX
77547

DIRTT CONSULTANT SET

-	04JUN25	95% CD	KA
1	09JUN25	95% CD (Rev 1)	KA
2	10JUN25	95% CD (Rev 2)	KA

Project:	148501
Drawn by:	KA
Scale:	AS NOTED
Plot Date:	2025/06/10
Contact:	HEATHER KENNEY
Contact Number:	346-465-4114

FLOORING CONSISTENCIES
FIRST FLOOR

DW-500.2

This drawing is the confidential and proprietary information of DIRTT Environmental Solutions Ltd. (DIRTT). Any reproduction, alteration, disclosure or use of this drawing other than as agreed to by DIRTT is expressly prohibited. Do not use drawing for sale purposes. All site dimensions, drawings, details, and specifications contained herein must be verified by sub-contractors and any discrepancies must be reported to DIRTT in writing before proceeding with work. See cover page of drawing package for full disclaimer.

C:\Users\SWILLI~1\AppData\Local\Temp\ICEcad-b590ff7d8-0cc1-4e45-80ffdf251e13a6c8\ICEcad.dwg 2025-6-10 12:40:00 PM

This drawing is the confidential and proprietary information of DIRTT Environmental Solutions Ltd. (DIRTT). Any reproduction, alteration, disclosure or use of this drawing other than as agreed to by DIRTT is expressly prohibited. Do not use drawing for sale purposes. All site dimensions, drawings, details, and specifications contained herein must be verified by sub-contractors and any discrepancies must be reported to DIRTT in writing before proceeding with work. See cover page of drawing package for full disclaimer.

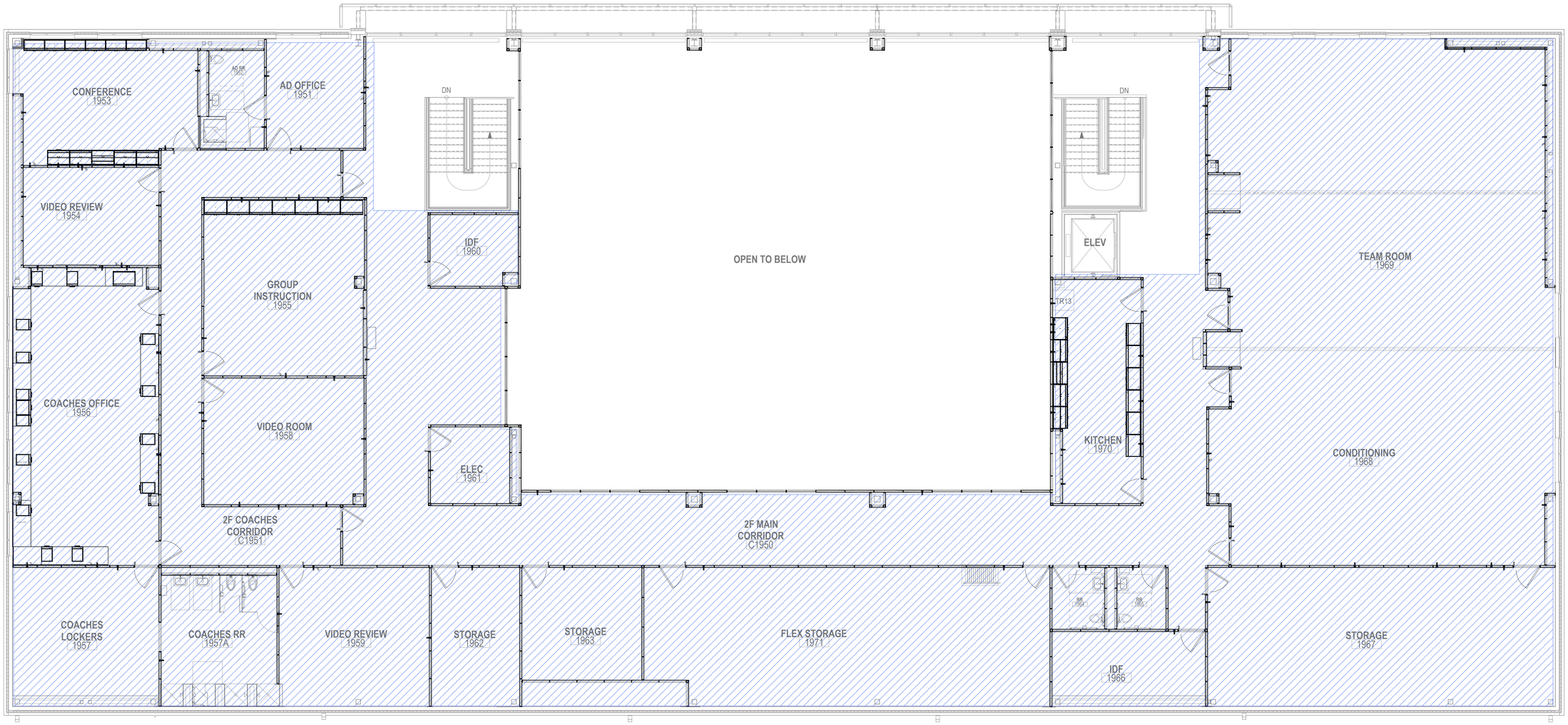

1 FLOOR PLAN
DW-500.3

NOT TO SCALE

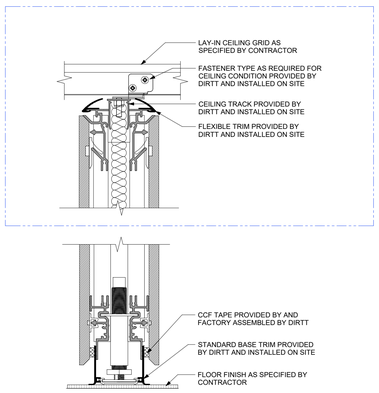

2 DIRTT WALL CEILING AND BASE DETAIL - SECTION
DW-500.3

NOT TO SCALE

DIRTT™

PROJECT DETAILS/NOTES:

FRAME AND TRIM DETAILS

EXTRUSION PROFILE / WALL TYPE:
- ☐ CURVILINEAR
- ☑ RECTILINEAR
- ☐ BLADE
- ☐ EVIL TWIN
- ☐ INSPIRE

FRAME FINISH:
- ☑ ANODIZED ALUMINUM
- ☐ POWDER-COATED
- ☐ VENEER

BASE TRIM COLOR:
- ☑ SILVER
- ☐ BLACK

PVC/GLASS WIPE COLOR:
- ☑ SILVER
- ☐ BLACK

REVEAL:
- ☑ CLASSIC
- ☐ ENZO

COPLANAR:
- ☑ NO
- ☐ YES

FLOOR, CEILING, AND SEISMIC DETAILS

FLOOR TYPE:
- ☑ CARPET
- ☐ HARD SURFACE

WALL HEIGHT: 10'-0"
WEIGHT ROOM: 25'-0"

CEILING TYPE:
- ☐ DRYWALL BULKHEAD
- ☐ CORNICE RAIL
- ☐ LOW WALL
- ☑ GRID

GRID TYPE:
- ☐ 9/16"
- ☑ 15/16"

TILE TYPE:
- ☑ FLUSH
- ☐ CONCEALED
- ☐ TEGULAR

SEISMIC REQUIRED:
- ☑ NO
- ☐ YES

HARDWARE REQUIREMENTS:

DOORS:
REFERENCE DOOR SCHEDULE FOR FURTHER DETAILS

ELECTRICAL PROVISION REQUIRED - SEE ELECTRICAL SHOP DRAWINGS

DATA PROVISION REQUIRED - SEE PON SHOP DRAWINGS

CASEWORK PROVISIONS REQUIRED - SEE CASEWORK SHOP DRAWINGS

ADDITIONAL NOTES:

DRAWING INDEX

DW-100.1-100.3	LEVEL 1 FLOOR PLANS
DW-100.4-100.6	LEVEL 2 FLOOR PLANS
DW-100.7-100.8	HIGHLIGHTED DIRTT SCOPE
DW-200.1-200.7	LEVEL 1 ELEVATIONS
DW-200.8-200.15	LEVEL 2 ELEVATIONS
DW-300.1	LEVEL 1 INTERSECTION DETAILS LEVEL 1 DOOR SCHEDULE
DW-300.2	LEVEL 2 INTERSECTION DETAILS LEVEL 2 DOOR SCHEDULE
DW-400.1-400.2	TYPICAL DIRTT DETAILS
DW-500.1-500.4	CEILING AND FLOOR EFFICIENCIES

Project Name:

GALENA PARK HIGH SCHOOL
FIELD HOUSE
LEVEL 2

Project Address:

1000 KEENE ST
GALENA PARK, TX
77547

DIRTT
CONSULTANT
SET

Rev	Date	Revision	Initial
-	04JUN25	95% CDS	KA
1	09JUN25	95% CDS (Rev 1)	KA
2	10JUN25	95% CDS (Rev 2)	KA

Project:	148501
Drawn by:	KA
Scale:	AS NOTED
Plot Date:	2025/06/10
Contact:	HEATHER KENNEY
Contact Number:	346-465-4114

CEILING EFFICIENCIES
SECOND FLOOR

DW-500.3

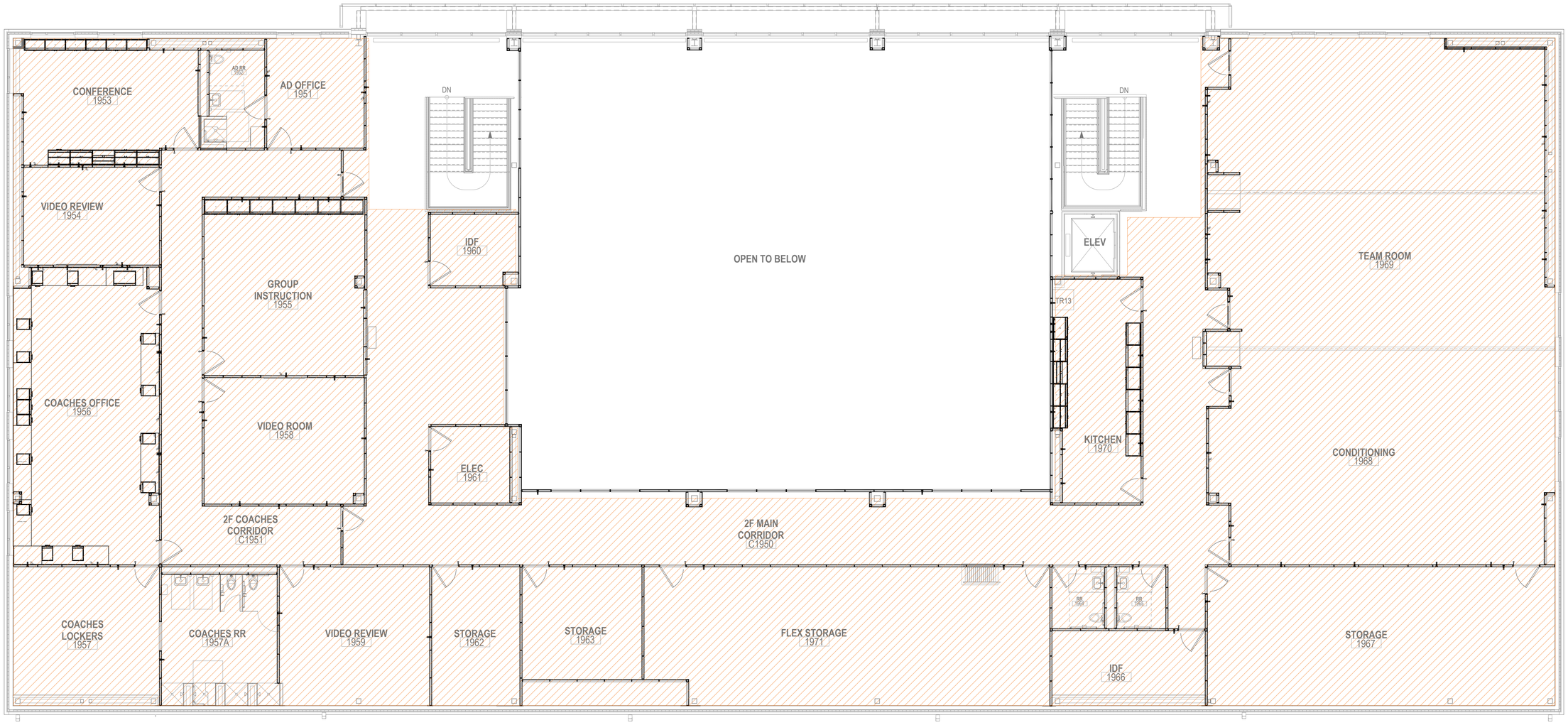

1 FLOOR PLAN
DW-500.4

NOT TO SCALE

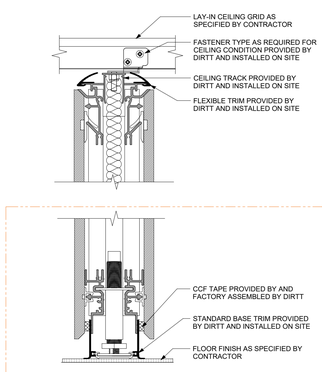

2 DIRTT WALL CEILING AND BASE DETAIL - SECTION
DW-500.4

NOT TO SCALE

DIRTT™

PROJECT DETAILS/NOTES:

FRAME AND TRIM DETAILS

EXTRUSION PROFILE / WALL TYPE:
- ☐ CURVILINEAR
- ☑ RECTILINEAR
- ☐ BLADE
- ☐ EVIL TWIN
- ☐ INSPIRE

FRAME FINISH:
- ☑ ANODIZED ALUMINUM
- ☐ POWDER-COATED
- ☐ VENEER

BASE TRIM COLOR:
- ☑ SILVER
- ☐ BLACK

PVC/GLASS WIPE COLOR:
- ☑ SILVER
- ☐ BLACK

REVEAL:
- ☑ CLASSIC
- ☐ ENZO

COPLANAR:
- ☑ NO
- ☐ YES

FLOOR, CEILING, AND SEISMIC DETAILS

FLOOR TYPE:
- ☑ CARPET
- ☐ HARD SURFACE

WALL HEIGHT: 10'-0"
WEIGHT ROOM: 25'-0"

CEILING TYPE:
- ☐ DRYWALL BULKHEAD
- ☐ CORNICE RAIL
- ☐ LOW WALL
- ☑ GRID

GRID TYPE:
- ☐ 9/16"
- ☑ 15/16"

TILE TYPE:
- ☑ FLUSH
- ☐ CONCEALED
- ☐ TEGULAR

SEISMIC REQUIRED:
- ☑ NO
- ☐ YES

HARDWARE REQUIREMENTS:

DOORS:
REFERENCE DOOR SCHEDULE FOR FURTHER DETAILS

ELECTRICAL PROVISION REQUIRED - SEE ELECTRICAL SHOP DRAWINGS

DATA PROVISION REQUIRED - SEE PON SHOP DRAWINGS

CASEWORK PROVISIONS REQUIRED - SEE CASEWORK SHOP DRAWINGS

ADDITIONAL NOTES:

DRAWING INDEX

DW-100.1-100.3	LEVEL 1 FLOOR PLANS
DW-100.4-100.6	LEVEL 2 FLOOR PLANS
DW-100.7-100.8	HIGHLIGHTED DIRTT SCOPE
DW-200.1-200.7	LEVEL 1 ELEVATIONS
DW-200.8-200.15	LEVEL 2 ELEVATIONS
DW-300.1	LEVEL 1 INTERSECTION DETAILS LEVEL 1 DOOR SCHEDULE
DW-300.2	LEVEL 2 INTERSECTION DETAILS LEVEL 2 DOOR SCHEDULE
DW-400.1-400.2	TYPICAL DIRTT DETAILS
DW-500.1-500.4	CEILING AND FLOOR EFFICIENCIES

Project Name:

GALENA PARK HIGH SCHOOL
FIELD HOUSE
LEVEL 2

Project Address:

1000 KEENE ST
GALENA PARK, TX
77547

DIRTT
CONSULTANT
SET

Rev	Date	Revision	Initial
-	04JUN25	95% CDS	KA
1	09JUN25	95% CDS (Rev 1)	KA
2	10JUN25	95% CDS (Rev 2)	KA

Project:	148501
Drawn by:	KA
Scale:	AS NOTED
Plot Date:	2025/06/10
Contact:	HEATHER KENNEY
Contact Number:	346-465-4114

FLOORING CONSISTENCIES
SECOND FLOOR

DW-500.4

This drawing is the confidential and proprietary information of DIRTT Environmental Solutions Ltd. (DIRTT). Any reproduction, distribution, disclosure or use of this drawing other than as agreed to by DIRTT is expressly prohibited. Do not use drawing for rough in purposes. All site dimensions, drawings, details, and specifications contained herein must be verified by sub-contractors and any discrepancies must be reported to DIRTT in writing before proceeding with work. See cover page of drawing package for full disclaimer.

C:\Users\SWILLI~1\AppData\Local\Temp\ICEcad-fb9ac0e7-7d94-4050-b194-d2e245d8a0f2\ICEcad.dwg 2025-6-10 1:39:12 PM

MECHANICAL GENERAL NOTES AND LEGENDS
M-001
FOR BLUEBEAM LABELING/OCR:

0"
1"

MECHANICAL PIPING LEGEND

DESCRIPTION	ABBV.
PUMPED CONDENSATE RETURN	PCR
HOT WATER SUPPLY	HWS
HOT WATER RETURN	HWR
CONDENSER WATER SUPPLY	CWS
CONDENSER WATER RETURN	CWR
CHILLED WATER SUPPLY	CHS
CHILLED WATER RETURN	CHR
CONDENSATE DRAIN (INSULATED)	CD
REFRIGERANT LINE (LIQUID)	RL
REFRIGERANT LINE (SUCTION)	RS
REFRIGERANT LINE (HOT GAS)	RHG
HIGH PRESSURE CONDENSATE	HPC

MECHANICAL PIPING SYMBOLS LEGEND

DRAWINGS	DETAILS	DESCRIPTION
		DIRECTION OF FLOW
		DROP IN PIPE
		RISE IN PIPE
		GATE VALVE
		BALL VALVE
		CHECK VALVE
		SUPERVISED VALVE WITH FLOW SWITCH
		PLUG VALVE / GAS COCK
		BUTTERFLY VALVE
		HOT WATER BALANCING VALVE
		PIPE UNION
		PRESSURE CONTROL VALVE
		3-WAY VALVE
		SOLENOID VALVE
		FLOW SWITCH
		PRESSURE GAUGE WITH GAUGE COCK
		THERMOMETER
		T & P RELIEF VALVE
		STRAINER
		CAP
		FLEXIBLE CONNECTION
		NEW CONNECTION TO EXISTING PIPING

NOTES:

1. NOT ALL SYMBOLS MAY BE USED ON THESE DRAWINGS.

MECHANICAL SYMBOLS LEGEND

SYMBOL	DESCRIPTION	ABBV.
	SUPPLY AIR CEILING DIFFUSER	SAG/SAR
	RETURN AIR GRILLE / REGISTER	RAG / RAR
	EXHAUST GRILLE / REGISTER	EG / ER
	SUPPLY AIR CEILING DIFFUSER	CD
	LINEAR SLOT DIFFUSER	LD
	SIDEWALL SUPPLY AIR GRILLE/REGISTER	SAG/SAR
	SIDEWALL RETURN AIR GRILLE/REGISTER	RAG/RAR
	DUCT MT'D. SIDEWALL SUPPLY AIR GRILLE/REGISTER	SAG/SAR
	SUPPLY DUCT RISE/DROP	
	RETURN DUCT RISE/DROP	
	EXHAUST DUCT RISE/DROP	
	DOOR GRILLE	DG
UC 3/4"	UNDERCUT DOOR	UC
WxD TD	LINED RETURN TRANSFER DUCT ABOVE CEILING (SIZE AS INDICATED)	TD
	SQUARE ELBOW WITH DOUBLE THICKNESS TURNING VANES	
	VOLUME DAMPER	MVD
	FLEXIBLE DUCT	FLEX.CONN.
	NEW DUCTWORK	
	EXISTING DUCTWORK / EQUIPMENT	
	DEMO DUCTWORK / EQUIPMENT	
	NEW MECHANICAL EQUIPMENT	
T	THERMOSTAT SENSOR	
H	HUMIDISTAT SENSOR	
T1	COMBINATION TEMPERATURE AND CO2 SENSOR	
T2	COMBINATION TEMPERATURE, HUMIDITY, & CO2 SENSOR	
T3	COMBINATION TEMPERATURE & HUMIDITY SENSOR	
SD	SMOKE DAMPER	SD
FD	FIRE DAMPER	FD
FS	COMBINATION FIRE AND SMOKE DAMPER	F/SD
CO2	CARBON DIOXIDE SENSOR	CO2
CO	CARBON MONOXIDE SENSOR	CO
BD	BAROMETRIC DAMPER	BD
S	SMOKE DETECTOR (BY DIVISION 28)	S
A	PNEUMATIC DAMPER ACTUATOR	A
BDD	BACKDRAFT DAMPER	BDD
FMS	FLOW MEASURING STATION	FMS
	SPIN-IN VOLUME DAMPER	
M	MOTORIZED DAMPER	M
	AIRFLOW DIRECTION	
	SUPPLY AIR	SA
	RETURN AIR	RA
	OUTSIDE AIR	OA
	EXHAUST AIR	EA
	OWNER-FURNISHED EQUIPMENT	OFE
	ABOVE FINISHED FLOOR	AFF
	BOTTOM OF DUCT	BOD
	NOT IN CONTRACT	NIC
	FURNISHED BY OTHERS	FBO
	REFLECTIVE CEILING PLAN	RCP
	EXISTING	(E)
	SCOPE OF WORK	SOW
	VARIABLE FREQUENCY DRIVE	VFD
	DISCONNECT FROM EXISTING	FBO
	CONNECT TO EXISTING	
1 M.401	PLAN SECTION SECTION NUMBER SHEET NUMBER	
A.150	DIFFUSER SCHEDULE CFM	
RE:01/M-401	DRAWING REFERENCE DETAIL NUMBER SHEET NUMBER	

NOTES:

1. NOT ALL SYMBOLS MAY BE USED ON THESE DRAWINGS.

MECHANICAL GENERAL NOTES

1. ALL WORK SHALL BE PERFORMED AS PER THE LOCAL MECHANICAL CODE, THE LOCAL BUILDING CODES AND LOCAL ENERGY CONSERVATION CODE.
2. PROVIDE ALL MATERIALS, LABOR, EQUIPMENT AND ANY OTHER INCIDENTALS ESSENTIAL FOR A COMPLETE AND OPERATIONAL INSTALLATION OF THE HVAC WORK SHOWN ON THE PLANS.
3. ALL DUCTWORK SHALL BE FABRICATED PER THE LATEST SMACNA STANDARDS.
4. DRAWINGS ARE DIAGRAMMATIC AND INDICATE THE GENERAL INFO FOR COORDINATION AND POTENTIAL CONFLICTS. THE MECHANICAL SUBCONTRACTOR SHALL, WITHOUT EXTRA COST TO THE PROJECT SHALL MAKE REASONABLE MODIFICATIONS IN THE LAYOUT AS NEEDED TO PREVENT CONFLICTS WITH OTHER TRADES, OR FOR PROPER EXECUTION OF THE WORK.
5. DUCT DIMENSIONS INDICATED ON DRAWINGS ARE CLEAR INSIDE AIR STREAM DIMENSIONS.
6. ALL NEW HVAC EQUIPMENT SHALL BE CLEANED AFTER THE FINISHING OF DRYWALL AND PRIOR TO THE RELEASE OF BUILDING TO THE OWNER. IF THE DUCTWORK AND AIR DEVICES ARE NOT PROPERLY PROTECTED DURING CONSTRUCTION THAN IT SHALL BE CLEANED AS WELL. CONTRACTOR TO PROVIDE DOCUMENTATION WITH DATE AND TIME OF ALL THE PERFORMED SERVICES.
7. ALL WALL MOUNTED TEMPERATURE, HUMIDITY AND CO2 SENSORS SHALL BE MOUNTED AT THE SAME ELEVATION AS THE LIGHT SWITCHES. COORDINATE WITH ELECTRICAL DRAWINGS AND ARCHITECTURAL ELEVATION PLAN.
8. REFER TO MECHANICAL ROOF PLAN FOR ROOF MOUNTED EQUIPMENTS.
9. REFER TO CHILLED WATER AND HEATING WATER PIPING DIAGRAMS FOR PIPE SIZES.
10. NEW PIPING TO BE INSTALLED AS TO NOT BLOCK ANY ACCESS DOORS FROM FULL SWING OPENING.
11. PRIOR TO INSTALLATION OF EQUIPMENT, VERIFY MANUFACTURER'S RECOMMENDED AND CODE REQUIRED CLEARANCES ARE AVAILABLE.
12. COORDINATE ALL WORK WITH ALL OTHER TRADES.
13. PROVIDE FIRE DAMPERS, SMOKE DAMPERS, OR COMBINATION FIRE/SMOKE DAMPERS IN ALL DUCTWORK AND RETURN AIR OPENINGS WHICH PENETRATE FIRE OR SMOKE RATED WALL OR FLOOR SLABS. FIRE OR SMOKE RATED WALLS CAN INCLUDE BUT NOT LIMITED TO CORRIDOR WALLS, MECHANICAL ROOMS, ELECTRICAL ROOMS, AND STORAGE ROOMS. REFER TO ARCHITECTURAL PLANS FOR PARTITION AND WALL TYPES INDICATING FIRE OR SMOKE RATED WALL LOCATION AND RATING.
14. REFER TO ARCHITECTURAL LOUVER SCHEDULE AND ELEVATION PLANS FOR EXACT SIZE, LOCATION AND ELEVATION.
15. ALL FAN POWERED BOXES SHALL BE EQUIPPED WITH FACTORY PROVIDED AND MOUNTED INDUCED AIR INLET ELBOW SOUND ATTENUATOR.
16. ALL TERMINAL UNITS AND INLINE EXHAUST FANS SHALL BE INSTALLED IN PROPER ACCESSIBLE AREA.
17. PROVIDE 24"x24" ACCESS PANEL IN THE GYP BOARD CEILING WHERE TERMINAL UNITS AND INLINE EXHAUST FANS ARE INSTALLED. COORDINATE WITH ARCHITECTURAL CEILING PLANS.
18. COORDINATE ALL AIR DEVICES LOCATIONS WITH FINAL ARCHITECTURAL REFLECTED CEILING PLAN.
19. ALL SUPPLY AND RETURN AIR CEILING DEVICES SHALL BE INSULATED ON TOP OF DEVICES TO PREVENT CONDENSATION. INSULATE DEVICES WITH 1-1/2" WRAPAROUND INSULATION AND TOTALLY COVER ALL SURFACES; SECURE INSULATION IN PLACE AND APPLY INSULATION PRIOR TO MOUNTING AIR DEVICES.
20. PROVIDE TURNING VANES ON ALL RECTANGULAR ELBOWS.
21. ALL EXPOSED DUCTWORK SHALL BE DOUBLE WALL DUCT. REFER TO SPECIFICATION. PAINT DUCTWORK COORDINATE COLOR WITH THE ARCHITECT.
22. PROVIDE 16x16 RETURN AIR OPENING IN WALL ABOVE CEILING WHERE WALLS GO UPTO DECK AND RETURN OPENING NOT SHOWN ON THE DRAWINGS. SHOW RETURN AIR OPENINGS IN DUCT SHOP DRAWINGS.
23. PROVIDE INTERNALLY LINED DUCT FOR THE FOLLOWING DUCTWORK UNLESS OTHERWISE NOTED ON THE DRAWINGS:
    - -FIRST 20'-0" OF SUPPLY AND RETURN DUCT FROM ROOF MOUNTED AIR HANDLING UNITS.
    - -FIRST 10'-0" OF ROOF MOUNTED EXHAUST FANS.
    - -ALL RETURN AIR BOOTS AND TRANSFER DUCTS.
24. BUILDING AUTOMATION SYSTEM THERMOGRAPHICS SHALL BE UPDATED TO REFLECT CURRENT FLOOR PLAN, ROOM NAMES AND ALL ASSOCIATED HVAC EQUIPMENT.
25. CONTRACTOR IS RESPONSIBLE FOR ALL COSTS ASSOCIATED WITH THE ELECTRICAL AND PLUMBING CHANGES FOR EQUIPMENT PROPOSED THAT DIFFERS FROM THE BASIS OF DESIGN.
26. ANY CHANGES REQUIRED TO ELIMINATE CONFLICTS OR THAT RESULT FROM A FAILURE TO COORDINATE BETWEEN CONTRACTORS SHALL BE WITHOUT ANY ADDITIONAL COST TO THE PROJECT.
27. ALL DUCTWORK (SUPPLY, RETURN, EXHAUST AND OUTSIDE AIR) IN UNCONDITIONED / NON-RETURN PLENUM SHALL BE PROVIDED WITH DUCT WRAP INSULATION.
28. REFER TO SNAP 'N SHIELD REFRIGERANT PIPING SUPPORT DETAIL FOR REFRIGERANT PIPING SUPPORT.
29. PROVIDE INSULATED CONDENSATE DRAIN PIPE FROM FLOOR MOUNTED OR SUSPENDED UNIT TO NEAREST FLOOR DRAIN. REFER TO PLUMBING DRAWINGS FOR EXACT DRAIN LOCATION.
30. PROVIDE CLEAR, WEATHERPROOF ENCLOSURE FOR THE CONTROL VALVE ACTUATORS LOCATED OUTDOORS.
31. ALL EXPOSED AND OUTDOOR REFRIGERANT AND CONDENSATE PIPING SHALL BE PROVIDED WITH INSULATION AND ALUMINUM JACKET.
32. ALL OUTSIDE AIR INTAKE OPENINGS SHALL BE LOCATED A MINIMUM OF 10'-0" FROM ANY PLUMBING VENT, FUEL-FIRED APPLIANCE VENT OR EXHAUST AIR DISCHARGE.
33. FOR ALL OPEN SPACES (MAIN CORRIDOR, GYM, CAFETERIA, LIBRARY ETC.), PROVIDE SENSORS IN CLEAR LOCKABLE PROTECTIVE ENCLOSURE.
34. NOT ALL SYMBOLS OR ABBREVIATIONS MAY BE USED ON THESE DRAWINGS.

PBK
www.pbk.com
TX FIRM: BR 1608
HOUSTON, TX
713-365-0608
LEAF ENGINEERS

PKG 3A - GPHS NEW FIELDHOUSE

1000 Keene St.
Galena Park, TX 77547

CLIENT PROJECT NO: 240539

ISSUE FOR PROPOSAL

Galena Park ISD

KEY PLAN

NORTH: PLAN TRUE

STATE OF TEXAS
MITAL J. PATEL
111622
PROFESSIONAL ENGINEER

June 10, 2025
LEAF ENGINEERS
F-16672

CLIENT	
Galena Park ISD	
DATE: June 10, 2025	PROJECT NUMBER: 240539

DRAWING HISTORY

No.	Description	Date

CHECKED BY: MP

DRAWN BY: CT

MECHANICAL GENERAL NOTES AND LEGENDS

M-001

Plot Stamp:
6/6/2025 1:24:30 PM

1ST FLOOR MECHANICAL PLAN
M-101
FOR BLUEBEAM LABELING/OCR:

MECHANICAL GENERAL NOTES:

1. COORDINATE TEMPERATURE SENSOR ROUGH-INS WITH DIRTT WALL SYSTEM MANUFACTURER.

MECHANICAL KEYED NOTES:

1. ROUTE CHWS/R & HWS/R PIPING FROM PLUMBING CHASE THROUGH FIRST FLOOR PLENUM SPACE AND UP TO 2ND FLOOR. SEE M-102 FOR CONTINUATION.
2. ROUTE SUPPLY AND RETURN DUCT UP TO 2ND FLOOR. SEE M-102 FOR CONTINUATION.
3. PROVIDE AMCA 550/540 LOUVER SIZED FOR 1530 CFM WITH A MINIMUM FREE AREA OF 3.05 FT^2. CONFIRM FINAL SIZE AND FINISH WITH ARCHITECT. VERIFY LOUVER IS AT LEAST 3 FT AWAY FROM ANY OPERABLE OPENING INTO THE BLDG.
4. PROVIDE AMCA 550/540 LOUVER SIZED FOR 1670 CFM WITH A MINIMUM FREE AREA OF 3.35 FT^2. CONFIRM FINAL SIZE AND FINISH WITH ARCHITECT.
5. PROVIDE AMCA 550/540 LOUVER SIZED FOR 2425 CFM WITH A MINIMUM FREE AREA OF 4.85 FT^2. CONFIRM FINAL SIZE AND FINISH WITH ARCHITECT.
6. PROVIDE AMCA 550/540 LOUVER SIZED FOR 500 CFM WITH A MINIMUM FREE AREA OF 1.0 FT^2. CONFIRM FINAL SIZE AND FINISH WITH ARCHITECT.
7. PROVIDE AMCA 550/540 LOUVER SIZED FOR 2400 CFM WITH A MINIMUM FREE AREA OF 4.8 FT^2 FOR THE DRYER EXHAUST OUTLET. PARTITION LOUVER PLENUM SUCH THAT EXHAUST SYSTEMS ARE COMPLETELY ISOLATED FROM ONE ANOTHER. APPLY FIRE WRAP TO ALL SIDES OF LOUVER. CONFIRM FINAL SIZE AND FINISH WITH ARCHITECT. DO NOT PROVIDE MESH SCREEN.
8. PROVIDE WALL MOUNTED FAN COIL UNIT. ROUTE REFRIGERANT TO ASSOCIATED OUTDOOR UNIT. REFRIGERANT PIPING SHALL BE SIZED PER MANUFACTURER'S RECOMMENDATIONS. EXPOSED PIPING SHALL BE WRAPPED IN ALUMINUM JACKETING.
9. ROUTE 3/4"Ø CONDENSATE DRAIN LINE TO NEAREST LAVATORY TAIL-PIECE. REFER TO PLUMBING DRAWINGS FOR EXACT DRAIN LOCATION
10. CARBON MONOXIDE SENSOR; REFER TO SEQUENCE OF OPERATION FOR ADDITIONAL DETAILS.
11. PROPOSED LOCATION OF DDC PANEL. COORDINATE EXACT LOCATION WITH EMCS CONTRACTOR.
12. ROUTE 3/4" Ø CONDENSATE DRAIN LINE TO NEAREST FLOOR SINK IN RISER ROOM. REFER TO PLUMBING DRAWINGS FOR EXACT DRAIN LOCATION.
13. PROVIDE MINI SPLIT CONDENSING UNIT WITH 12" TALL HOUSEKEEPING PAD THAT EXTENDS AT MINIMUM 6" PAST ALL SIDES OF UNIT.

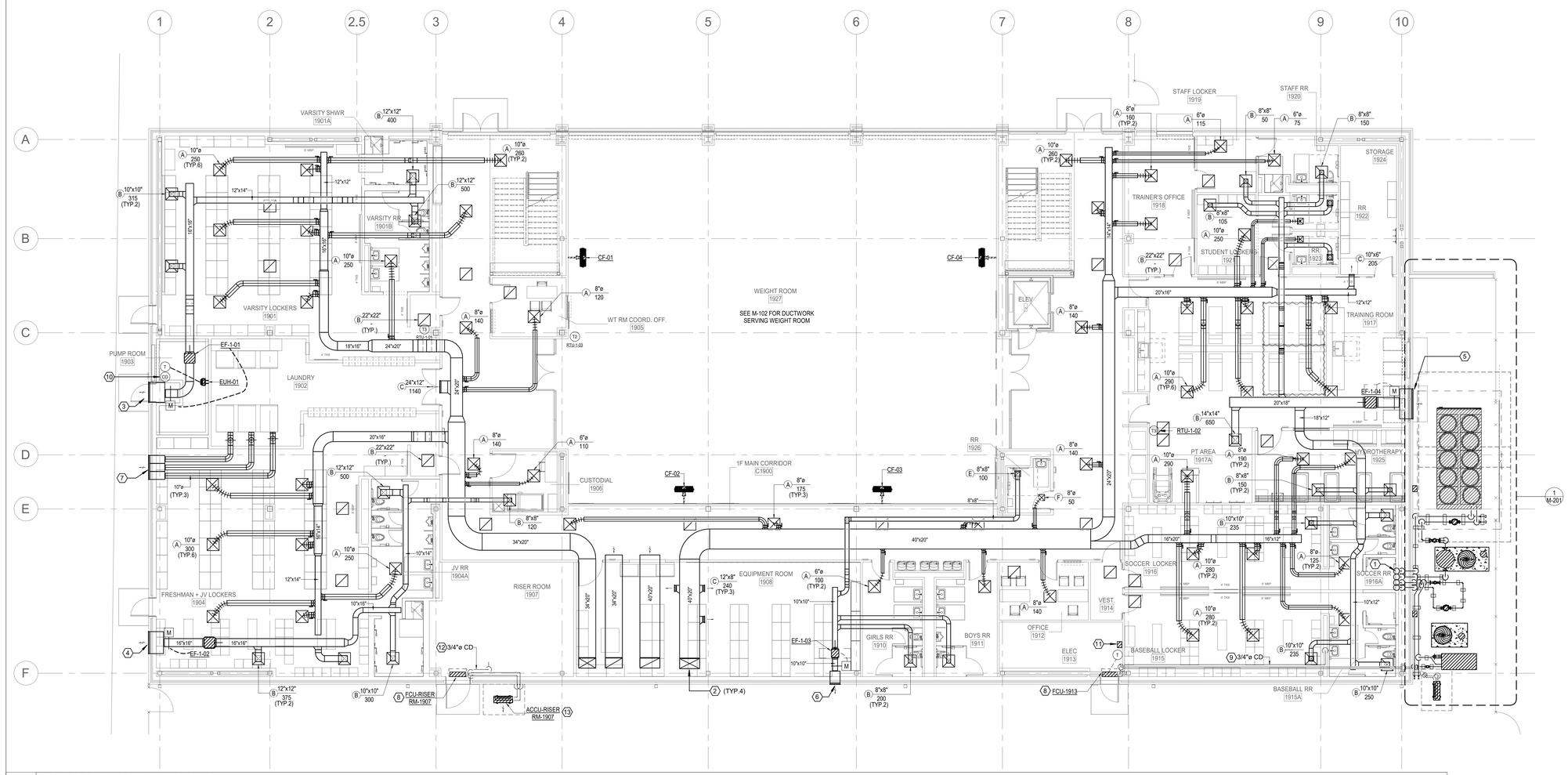

1 1ST FLOOR MECHANICAL PLAN
SCALE: 1/8" = 1'-0"

PBK
www.pbk.com
TX FIRM: BR 1608
HOUSTON, TX
713-365-0608

LEAF ENGINEERS

PKG 3A - GPHS NEW FIELDHOUSE

1000 Keene St.
Galena Park, TX 77547

CLIENT PROJECT NO: 240539

ISSUE FOR PROPOSAL

Galena Park ISD

KEY PLAN
NORTH: PLAN TRUE

STATE OF TEXAS
MITAL J. PATEL
111622
PROFESSIONAL ENGINEER

June 10, 2025
LEAF ENGINEERS
F-18672

CLIENT	
Galena Park ISD	
DATE: June 10, 2025	PROJECT NUMBER: 240539

DRAWING HISTORY

No.	Description	Date

CHECKED BY: MP
DRAWN BY: CT

1ST FLOOR MECHANICAL PLAN

M-101

Plot Stamp:
6/6/2025 1:24:41 PM

2ND FLOOR MECHANICAL PLAN
M-102
FOR BLUEBEAM LABELING/OCR:

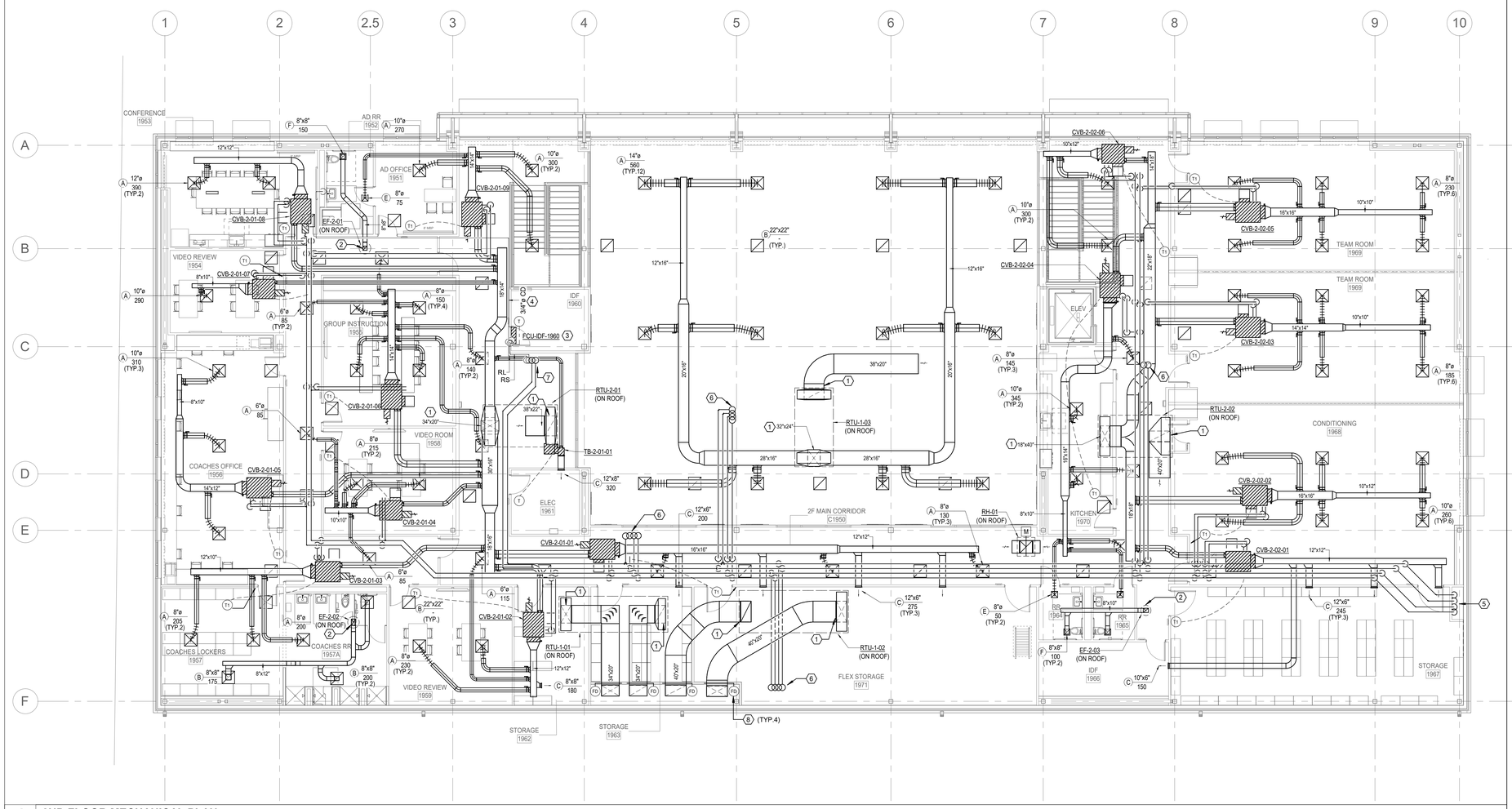

1 2ND FLOOR MECHANICAL PLAN
SCALE: 1/8" = 1'-0"

MECHANICAL GENERAL NOTES:

1. COORDINATE TEMPERATURE SENSOR ROUGH-INS WITH DIRTT WALL SYSTEM MANUFACTURER.

MECHANICAL KEYED NOTES:

1. ROUTE DUCT UP THROUGH ROOF TO ASSOCIATED ROOFTOP UNIT. PROVIDE TRANSITIONS AS REQUIRED TO MAKE CONNECTION.
2. ROUTE DUCT UP THROUGH ROOF TO ASSOCIATED ROOFTOP UNIT. PROVIDE TRANSITIONS AS REQUIRED TO MAKE CONNECTION.
3. PROVIDE WALL MOUNTED FAN COIL UNIT. ROUTE REFRIGERANT PIPING UP THROUGH ROOF TO ASSOCIATED OUTDOOR UNIT. REFRIGERANT PIPING SHALL BE SIZED PER MANUFACTURER'S RECOMMENDATIONS. EXPOSED PIPING SHALL BE WRAPPED IN ALUMINUM JACKETING.
4. ROUTE 3/4"Ø CONDENSATE DRAIN LINE TO NEAREST LAVATORY TAIL-PIECE. REFER TO PLUMBING DRAWINGS FOR EXACT DRAIN LOCATION.
5. CHWS/R & HWS/R PIPING FROM LOWER LEVEL THRU CHASE; REFER TO M-101 SHEET FOR CONTINUATION.
6. HYDRONIC PIPING UP TO ROOF TO HYDRONIC AIR HANDLING UNIT; REFER TO ROOF PLAN M-301 FOR CONTINUATION.
7. CHWS/R, HWS/R & REFRIGERANT PIPING UP TO ROOF; REFER TO ROOF PLAN M-301 FOR CONTINUATION.
8. PROVIDE 1.5 HR RATED FIRE DAMPER FOR DUCTWORK AT CHASE PENETRATION.

PBK
www.pbk.com
TX FIRM: BR 1608
HOUSTON, TX
713-365-0608
LEAF ENGINEERS

PKG 3A - GPHS NEW FIELDHOUSE

1000 Keene St,
Galena Park, TX 77547

CLIENT PROJECT NO: 240539

ISSUE FOR PROPOSAL

Galena Park ISD

KEY PLAN
NORTH: PLAN TRUE

STATE OF TEXAS
MITAL J. PATEL
111622
June 10, 2025
LEAF ENGINEERS
F-18672

CLIENT	
Galena Park ISD	
DATE: June 10, 2025	PROJECT NUMBER: 240539

DRAWING HISTORY

No.	Description	Date

CHECKED BY: MP
DRAWN BY: CT

2ND FLOOR MECHANICAL PLAN

M-102

Plot Stamp:
6/6/2025 1:24:43 PM

MECHANICAL ENLARGED PLANS
M-201
FOR BLUEBEAM LABELING/OCR:

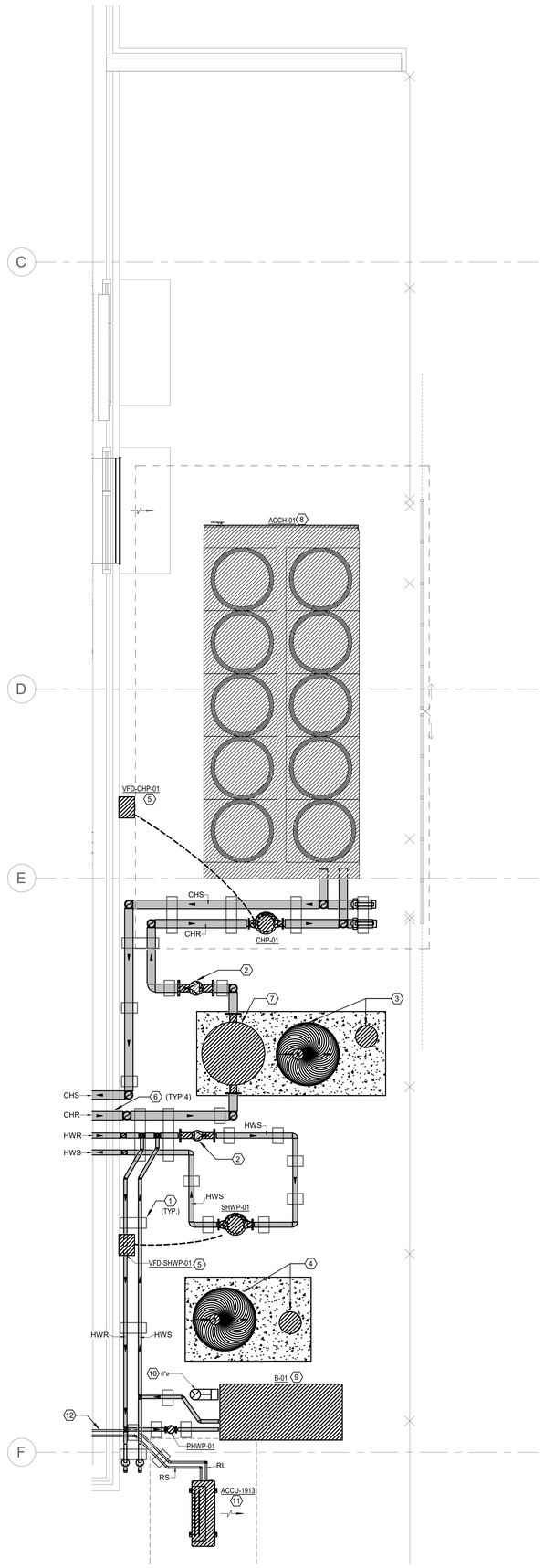

1 ENLARGED MECHANICAL YARD PLAN
SCALE: 3/8" = 1'-0"

MECHANICAL KEYED NOTES:

1. PROVIDE PIPE STANCHIONS.
2. COMBINATION AIR AND DIRT SEPARATOR.
3. INSULATED CHILLED WATER EXPANSION TANK AND CHEMICAL TREATMENT. PROVIDE WITH ALUMINUM JACKETING. PROVIDE WITH 12" TALL HOUSEKEEPING PAD THAT EXTENDS AT MINIMUM 6" PAST ALL SIDES.
4. INSULATED HOT WATER EXPANSION TANK AND CHEMICAL TREATMENT. PROVIDE WITH ALUMINUM JACKETING. PROVIDE WITH 12" TALL HOUSEKEEPING PAD THAT EXTENDS AT MINIMUM 6" PAST ALL SIDES.
5. PROVIDE VFD IN NEMA 3R ENCLOSURE.
6. CHWS/R & HWS/R PIPING TO PENETRATE THE BUILDING INTO PLUMBING CHASE AT ~ 5' AFF TO BE ABOVE DOMESTIC WATER LINES AND SANITARY LINES. SEE M-101 FOR CONTINUATION OF CHILLED AND HOT WATER LINES INTO 1ST FLOOR PLENUM SPACE.
7. 350 GALLON BUFFER TANK FOR CHILLED WATER SYSTEM. PROVIDE WITH 12" TALL HOUSEKEEPING PAD THAT EXTENDS AT MINIMUM 6" PAST ALL SIDES.
8. AIR COOLED CHILLER. PROVIDE WITH A 12" TALL HOUSEKEEPING PAD THAT EXTENDS AT MINIMUM 6" PAST ALL SIDES.
9. CONDENSING BOILER. PROVIDE WITH A 12" TALL HOUSEKEEPING PAD THAT EXTENDS AT MINIMUM 6" PAST ALL SIDES. ROUTE CONDENSATE DRAIN LINE TO PROVIDED DRAIN. RE: CIVIL
10. TERMINATE 6" FLUE WITH RAIN CAP.
11. ROUTE UNIT'S REFRIGERANT TO ASSOCIATED INDOOR UNIT. REFRIGERANT PIPING SHALL BE SIZED PER MANUFACTURER'S RECOMMENDATIONS. EXPOSED PIPING SHALL BE WRAPPED IN ALUMINUM JACKETING. PROVIDE UNIT WITH 12" TALL HOUSEKEEPING PAD THAT EXTENDS AT MINIMUM 6" PAST ALL SIDES.
12. REFRIGERANT PIPING TO PENETRATE THE BUILDING INTO PLUMBING CHASE. SEE M-101 FOR CONTINUATION OF REFRIGERANT PIPING INTO 1ST FLOOR PLENUM SPACE.

PBK
www.pbk.com
TX FIRM: BR 1608
HOUSTON, TX
713-965-0608
LEAF ENGINEERS

PKG 3A - GPHS NEW FIELDHOUSE

1000 Keene St,
Galena Park, TX 77547

CLIENT PROJECT NO: 240539

ISSUE FOR PROPOSAL

KEY PLAN
NORTH: PLAN TRUE

STATE OF TEXAS
MITAL J. PATEL
111622
LICENSED
PROFESSIONAL ENGINEER

June 10, 2025
LEAF ENGINEERS
F-18672

CLIENT	
Galena Park ISD	
DATE	PROJECT NUMBER
June 10, 2025	240539

DRAWING HISTORY

No.	Description	Date

CHECKED BY: MP
DRAWN BY: CT

MECHANICAL ENLARGED PLANS

M-201

Plot Stamp:
6/6/2025 1:24:45 PM

ROOF MECHANICAL PLAN
M-301
FOR BLUEBEAM LABELING/OCR:

0"
1"

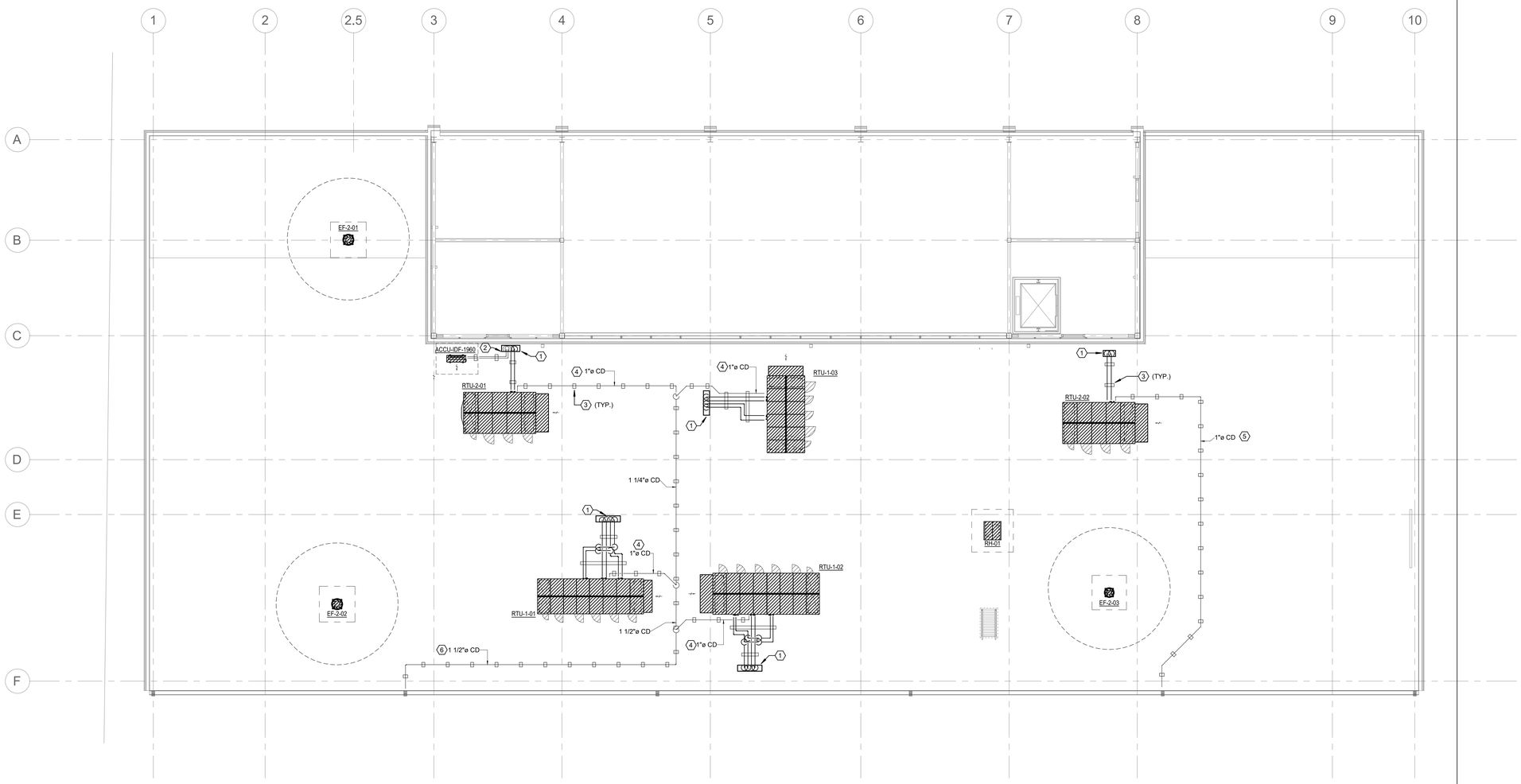

1 ROOF MECHANICAL PLAN TEST
SCALE: 1/8" = 1'-0"

MECHANICAL KEYED NOTES:

1. HYDRONIC PIPING UP THROUGH ROOF TO ASSOCIATED UNIT. PROVIDE STAINLESS STEEL PIPING HOOD. REFER TO PIPING DIAGRAMS FOR ADDITIONAL DETAILS
2. ROUTE REFRIGERANT PIPING TO ASSOCIATED INDOOR UNIT. PROVIDE STAINLESS STEEL PIPING HOOD FOR PIPING ROOF PENETRATION.
3. PROVIDE PORTABLE PIPE SUPPORTS IN MAXIMUM HORIZONTAL SPACING OF 4'-0" INTERVALS. TYP.
4. ROUTE 1" RTU CONDENSATE DRAIN LINE TO MAIN CONDENSATE LINE LEADING TO NEAREST DOWNSPOUT.
5. ROUTE 1" RTU CONDENSATE DRAIN LINE TO NEAREST DOWNSPOUT.
6. ROUTE MAIN RTU CONDENSATE DRAIN LINE TO DOWNSPOUT INDICATED.

PBK
www.pbk.com
TX FIRM: BR 1608
HOUSTON, TX
713-365-0608

LEAF ENGINEERS

PKG 3A - GPHS NEW FIELDHOUSE

1000 Keene St,
Galena Park, TX 77547

CLIENT PROJECT NO: 240539

ISSUE FOR PROPOSAL

Galena Park ISD

KEY PLAN
NORTH: PLAN TRUE

STATE OF TEXAS
MITAL J. PATEL
111622
PROFESSIONAL ENGINEER

June 10, 2025
LEAF ENGINEERS
F-18672

CLIENT	
Galena Park ISD	
DATE: June 10, 2025	PROJECT NUMBER: 240539

DRAWING HISTORY

No.	Description	Date

CHECKED BY: MP
DRAWN BY: CT

ROOF MECHANICAL PLAN

M-301

Plot Stamp:
6/6/2025 1:24:46 PM

MECHANICAL PIPING DIAGRAM
M-401
FOR BLUEBEAM LABELING/OCR:

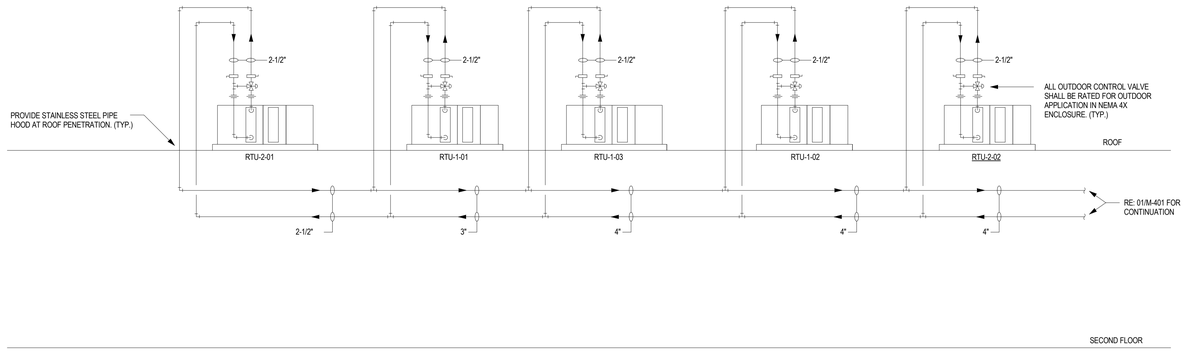

02 MECHANICAL CHILLED WATER PIPING DIAGRAM
SCALE: NONE

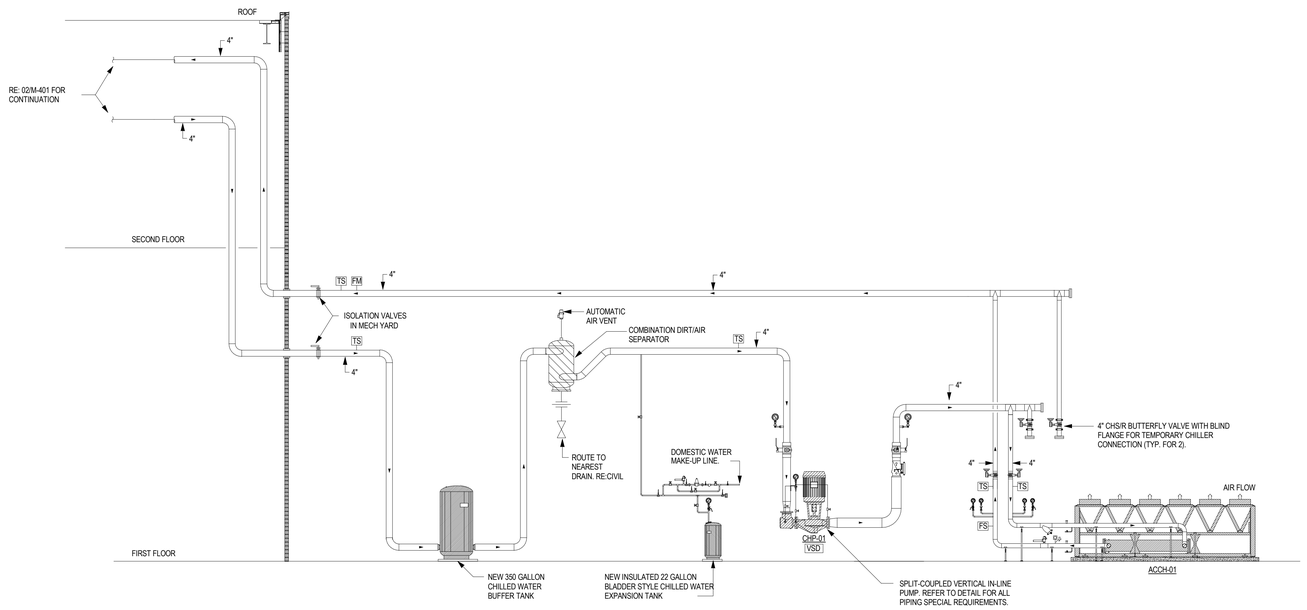

01 MECHANICAL CHILLED WATER PIPING DIAGRAM
SCALE: NONE

PBK
www.pbk.com
TX FIRM: BR 1608
HOUSTON, TX
713-365-0608

LEAF ENGINEERS

PKG 3A - GPHS NEW FIELDHOUSE

1000 Keene St.
Galena Park, TX 77547

CLIENT PROJECT NO: 240539

ISSUE FOR PROPOSAL

Galena Park ISD
GP
EXCELLENCE IN ALL FOR ALL STUDENTS

KEY PLAN
NORTH: PLAN TRUE

STATE OF TEXAS
MITAL J. PATEL
111622
June 10, 2025
LEAF ENGINEERS
F-18672

CLIENT	
Galena Park ISD	
DATE: June 10, 2025	PROJECT NUMBER: 240539

DRAWING HISTORY

No.	Description	Date

CHECKED BY: MP
DRAWN BY: CT

MECHANICAL PIPING DIAGRAM

M-401

Plot Stamp:
6/6/2025 1:24:48 PM

MECHANICAL PIPING DIAGRAM
M-402
FOR BLUEBEAM LABELING/OCR:

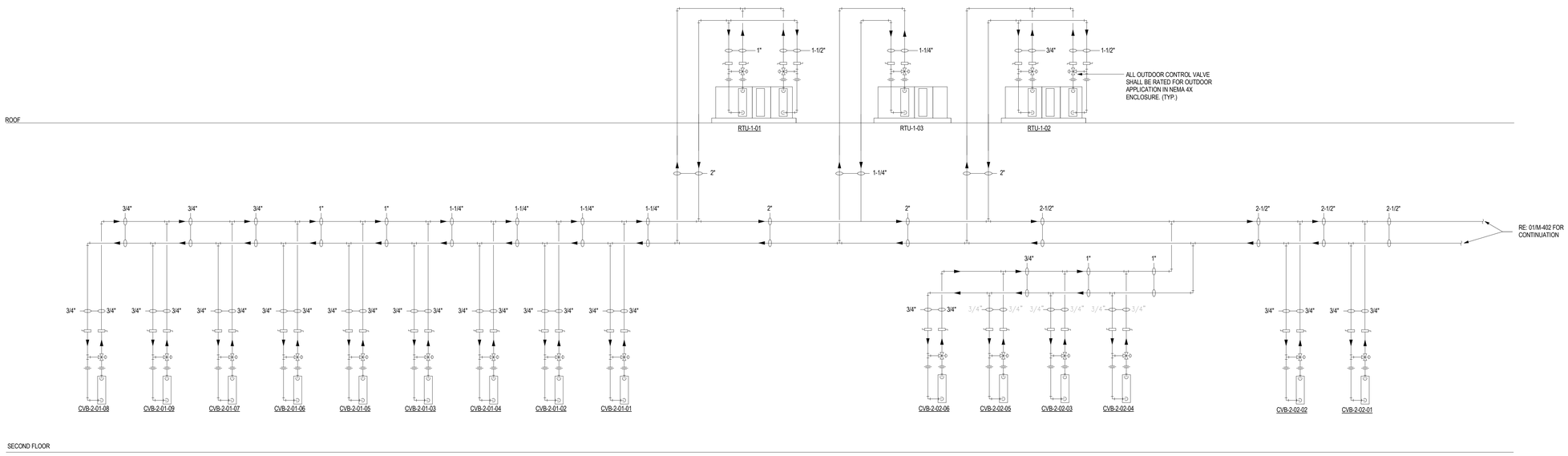

02 MECHANICAL HEATING WATER PIPING DIAGRAM
SCALE: NONE

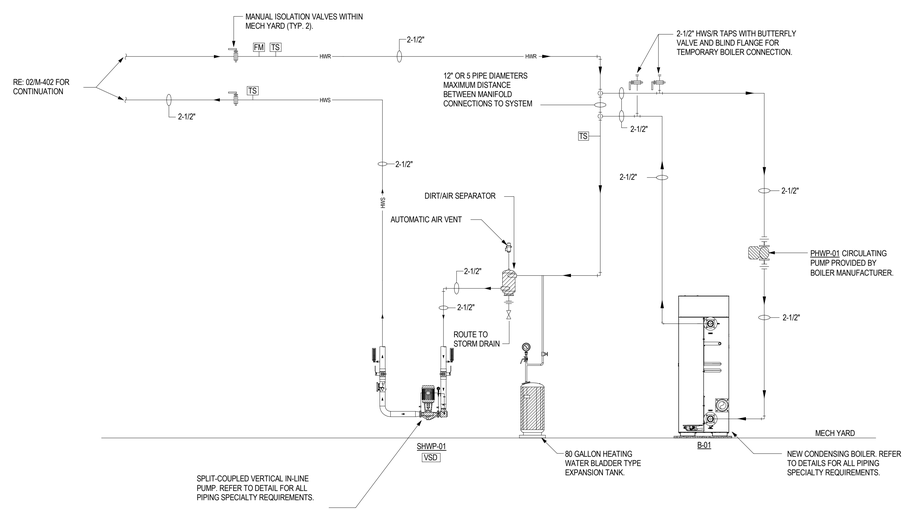

01 MECHANICAL HEATING WATER PIPING DIAGRAM
SCALE: NONE

PBK
www.pbk.com
TX FIRM: BR 1608
HOUSTON, TX
713-365-0608

LEAF ENGINEERS

PKG 3A - GPHS NEW FIELDHOUSE

1000 Keene St.
Galena Park, TX 77547

CLIENT PROJECT NO: 240539

ISSUE FOR PROPOSAL

Galena Park ISD

KEY PLAN
NORTH: PLAN TRUE

STATE OF TEXAS
MITAL J. PATEL
111622
PROFESSIONAL ENGINEER

June 10, 2025
LEAF ENGINEERS
F-18672

CLIENT	
Galena Park ISD	
DATE: June 10, 2025	PROJECT NUMBER: 240539

DRAWING HISTORY

No.	Description	Date

CHECKED BY: MP
DRAWN BY: CT

MECHANICAL PIPING DIAGRAM

M-402

Plot Stamp:
6/6/2025 1:24:48 PM

MECHANICAL SCHEDULES
M-501

FOR BLUEBEAM LABELING/OCR:

0"

1"

SCROLL WATER CHILLERS AIR-COOLED SCHEDULE

DESIGNATION	REFRIGERANT	COMPRESSOR TYPE	EVAPORATOR DATA								AMBIENT TEMP. (°F)	MAX. UNIT KW / TON (@ DESIGN CONDITIONS)	EER AT AHRI CONDITIONS		MANUFACTURER	MODEL NUMBER	DIMENSIONS (L x W x H) INCHES	WEIGHT (lbs)	ELECTRICAL DATA		
			CAPACITY (TONS)	E.W.T. (°F)	L.W.T. (°F)	GPM	MINIMUM EVAPORATOR FLOW RATE (GPM)	FOULING FACTOR	NO. OF PASS	MAX. P.D. (FEET)			FULL LOAD (EER)	IPLV (EER)					MCA	MOCP	VOLTS / Ø / HZ
ACCH-01	R-454B / R-32	SCROLL	110.0	56°F	42°F	189	175	0.0001	1.00	6.33	105°F	1.23	10.30	16.94	TRANE	CGAM	205.2" x 88.4" x 92.5"	8,300	262	350	460 / 3 / 60

1. REFERENCE ELECTRICAL DRAWINGS FOR ELECTRICAL DATA.
2. PROVIDE CHILLER WITH SINGLE POINT POWER CONNECTION, FACTORY MOUNTED NON-FUSED MOLDED CASE DISCONNECT SWITCH, AND FACTORY MOUNTED 120V RECEPTICLE.
3. CHILLER SHALL BE PROVIDED WITH BACNET INTERFACE CARD.
4. CONDENSER COILS SHALL BE FULLY DIPPED AND BAKED (E-COAT) WITH UV TOP COAT.
5. PROVIDE LOW AMBIENT HEAD PRESSURE CONTROL AS SPECIFIED.
6. CONTROL PANEL SHALL BE NEC409 AND UL508A COMPLIANT (HIGH SHORT CIRCUIT CURRENT RATING.)
7. PROVIDE COMPRESSOR SOUND BLANKETS; REFER TO SPECIFICATION 2.3.C FOR ULTRA LOW SOUND COMPRESSOR CONTROL REQUIREMENTS.
8. PROVIDE LOW SOUND CONDENSER FANS.
9. SOUND CRITERIA 30'-0" FROM THE COIL SIDE OF THE CHILLER: A-WEIGHTED SOUND PRESSURE LEVEL SHALL NOT EXCEED 70 DBA.
10. COMPRESSOR ACOUSTIC BLANKETS AND LOW SOUND FANS SHALL BE PROVIDED REGARDLESS IF SCHEDULED DBA IS MET WITHOUT.
11. **CONDENSER COILS SHALL BE ALUMINUM / COPPER. MICROCHANNEL IS NOT ALLOWED.**

PACKAGED, OUTDOOR, CENTRAL-STATION HYDRONIC AIR HANDLING UNIT SCHEDULE

DESIGNATION	SERVICE	TYPE	ARRANGEMENT	MANUFACTURER	MODEL	DISCHARGE ARRANGEMENT	TYPE	DIMENSIONS (L x W x H)	OPERATING WEIGHT (lbs)	SEE NOTE	INDOOR BLOWER DATA									MAIN COOLING COIL DATA										RE-HEATING COIL DATA										PRE-HEATING COIL DATA										VOLTAGE / PH / HZ
											TOTAL CFM	OUTSIDE AIR CFM	MIN. OUTSIDE AIR CFM	EST. EXT. SP. (IN....	MOTOR H.P.	BRAKE HP	VFD H.P.	TYPE	CFM OVER COIL	MAX. FACE VELOCITY (FPM)	GRAND SENSIBLE BTUH	GRAND TOTAL BTUH	EAT (°F DB)	EAT (°F WB)	LAT (°F DB)	GPM	EWT (°F DB)	LWT (°F DB)	CFM OVER COIL	MAX. FACE VELOCITY (FPM)	GRAND TOTAL BTUH	EAT (°F DB)	LAT (°F DB)	GPM	EWT (°F DB)	LWT (°F DB)	CFM OVER COIL	MAX. FACE VELOCITY (FPM)	GRAND TOTAL BTUH	EAT (°F DB)	LAT (°F DB)	GPM	EWT (°F DB)	LWT (°F DB)		
RTU-1-01	1ST FLOOR	SINGLE ZONE...	HORIZONTAL DRAW-THRU	CARRIER	39MW	BOTTOM DISCHARGE	HYDRONIC	228" x 74" x 63"	4,600	1-19	5,970	3,200	3,200	1.5	(2) 5 HP	(2) 3.8 HP	10	DIRECT DRIVE - PLENUM FAN	5,970	500	210,503	364,362	87.6°	73.0°	55.0°	52	42.0°	56.0°	5,970	750	286,794	40.5°	85.0°	14	140.0°	100.0°	5,970	750	110,646	37.8°	55.0°	6	140.0°	100.0°	480 / 3 / 60
RTU-1-02	1ST FLOOR	SINGLE ZONE...	HORIZONTAL DRAW-THRU	CARRIER	39MW	BOTTOM DISCHARGE	HYDRONIC	235" x 81" x 66"	4,800	1-19	7,180	3,000	3,000	1.5	(2) 5 HP	(2) 4.7 HP	10	DIRECT DRIVE - PLENUM FAN	7,180	500	236,671	390,955	85.5°	71.3°	55.0°	56	42.0°	56.0°	7,180	750	294,516	47.0°	85.0°	15	140.0°	100.0°	7,180	750	78,084	44.9°	55.0°	4	140.0°	100.0°	480 / 3 / 60
RTU-1-03	WIEGHT ROOM	SINGLE ZONE...	HORIZONTAL DRAW-THRU	CARRIER	39MW	BOTTOM DISCHARGE	HYDRONIC	195" x 74" x 63"	3,800	1-19	6,720	1,600	480	1.0	(2) 5 HP	(2) 3.7 HP	10	DIRECT DRIVE - PLENUM FAN	6,720	500	198,029	299,017	82.3°	68.6°	55.0°	43	42.0°	56.0°	6,720	750	203,904	56.9°	85.0°	10	140.0°	100.0°	NO PRE-HEAT COIL										480 / 3 / 60
RTU-2-01	2ND FLOOR	SINGLE DUCT...	HORIZONTAL DRAW-THRU	CARRIER	39MW	BOTTOM DISCHARGE	HYDRONIC	167" x 81" x 66"	3,600	1-19	7,695	1,200	480	1.0	(2) 3 HP	(2) 2.9 HP	7 1/2	DIRECT DRIVE - PLENUM FAN	7,695	500	214,472	308,135	80.8°	67.3°	55.0°	44	42.0°	56.0°	NO RE-HEAT COIL								NO PRE-HEAT COIL										480 / 3 / 60
RTU-2-02	2ND FLOOR	SINGLE DUCT...	HORIZONTAL DRAW-THRU	CARRIER	39MW	BOTTOM DISCHARGE	HYDRONIC	167" x 81" x 66"	3,600	1-19	6,755	1,600	640	1.0	(2) 3 HP	(2) 2.3 HP	7 1/2	DIRECT DRIVE - PLENUM FAN	6,755	500	198,898	300,412	82.3°	68.6°	55.0°	43	42.0°	56.0°	NO RE-HEAT COIL								NO PRE-HEAT COIL										480 / 3 / 60

1. REFERENCE ELECTRICAL DRAWINGS FOR ELECTRICAL DATA.
2. ESTIMATED EXTERNAL STATIC PRESSURE INCLUDES LOSSES THROUGH DUCTWORK, AIR DEVICES, SOUND ATTENUATORS, ETC.
3. ROOFTOP UNIT INTERNAL STATIC PRESSURE SHALL INCLUDE LOSSES THROUGH COILS, CASING, INTERNAL DAMPERS, AND 0.75" W.G. FOR DIRTY FILTERS.
4. COOLING COILS SHALL HAVE A MINIMUM OF 6 ROWS AND A MAXIMUM OF 10 FINS PER INCH. PRESSURE DROP THROUGH COIL SHALL NOT EXCEED 15 FT. AT SCHEDULED GPM.
5. PROVIDE UNPOWERED 120V/15A GFCI CONVENIENCE OUTLET.
6. PROVIDE MERV 13 FILTERS.
7. PROVIDE FACTORY NEMA 3R ELECTRICAL PANEL MOUNTED ON UNIT FOR FIELD SUPPLIED VARIABLE FREQUENCY DRIVE. CONTRACTOR TO INSTALL VARIABLE FREQUENCY DRIVE IN THE NEMA 3R PANEL PROVIDED BY THE AHU MANUFACTURER.
8. COOLING COILS SHALL HAVE STAINLESS STEEL COIL CASINGS AND STAINLESS STEEL COIL SUPPORTS.
9. PROVIDE AIR HANDLERS WITH FACTORY MOUNTED AND TESTED UVC LIGHT SECTION DOWNSTREAM OF COOLING COIL WITH STAINLESS STEEL DRAIN PAN. PROVIDE WITH ACCESS DOOR KILL SWITCHES FOR THE UVC LIGHT.
10. PROVIDE FACTORY MOUNTED SHAFT GROUNDING KIT FOR AIR HANLDING UNIT MOTOR, NO EXCEPTIONS.
11. PROVIDE MODULATING MOTORIZED OUTSIDE AIR DAMPER. ACTUATOR BY CONTROLS CONTRACTOR.
12. ALL COILS SHALL BE FULLY DIPPED AND BAKED (E-COAT) WITH UV TOP COAT.
13. PROVIDE FLOAT SWITCH IN DRAIN PAN.
14. PROVIDE SMOKE DETECTOR IN THE RETURN AIR DUCT SYSTEM. (GREATER THAN OR EQUAL TO 2,000 CFM).
15. PROVIDE AIRFLOW MEASURING STATION (AFMS) AT OUTSIDE AIR INTAKE OPENING. AFMS SHALL BE DESIGNED TO OPERATE WITHOUT PRE-FILTRATION AND BE SPECIFICALLY DESIGNED TO OPERATE IN TURBULENT AIRSTREAMS.

CONDENSING BOILER SCHEDULE

DESIGNATION	TYPE	LOCATION	BURNER FUEL	MIN. OUTPUT (BTUH)	MIN. EFFICIENCY	FUEL CONSUMPTION (BTUH)	MANUFACTURER	MODEL NUMBER	GPM	E.W.T. (°F)	L.W.T. (°F)	FLUE SIZE (DIA.)	DIMENSIONS (L x W x H)	WEIGHT (LBS)	BOILER ELECTRICAL INFORMATION		CIRCULATING PUMP ELECTRICAL INFORMATION			
															MAX AMP	VOLT / Ø / HZ	DESIGNATION	MAX H.P.	FLA	VOLT / Ø / HZ
B-01	CONDENSING	MECH YARD	NAT. GAS	1,416,000	94%	1,500,000	CAMUS	AVENGER	47	100°F	160°F	6"	38" x 29.5" x 83"	1,530	8	120/1/60	PHWP-01	3/4	13.8	115/1/60

1. REFERENCE ELECTRICAL DRAWINGS FOR ELECTRICAL DATA.
2. PROVIDE AUXILIARY PUMP AS REQUIRED BY MANUFACTURER TO CIRCULATE WATER AT BYPASS CONDITIONS. REFER TO ELECTRICAL DRAWINGS.
3. PROVIDE CATEGORY IV FLUE PIPE, INNER PIPE OF AL29-4C AND OUTER PIPE OF 430 STAINLESS STEEL.
4. PROVIDE WITH A CONDENSATE NEUTRALIZATION KIT WITH SCHEDULE 8-CPVC CONDENSATE PIPING.
5. CONDENSING BOILER HEAT EXCHANGER SHALL BE OF STAINLESS STEEL OR CAST IRON. COPPER HEAT EXCHANGERS ARE NOT ACCEPTABLE; REFER TO SPECIFICATION.
6. BOILER MANUFACTURER SHALL PROVIDE CONTROLS FOR BOILER SEQUENCING AND CONTROL. BAS SHALL INTERFACE TO BOILER CONTROL PANEL.
7. MANUFACTURER SHALL PROVIDE BACNET INTERFACE CARD ANY ACCESSORIES REQUIRED TO FACILITATE 2-WAY COMMUNICATION WITH THE BAS CONTRACTOR'S SYSTEM. THIS INCLUDES, BUT IS NOT LIMITED TO, FURNISHING, INSTALLING AND PROGRAMMING OF COMMUNICATION CARD (i.e. BACnet)
8. BOILER TO ENABLE RESPECTIVE CIRCULATING PUMP. IF SEPARATE POWER CONNECTION IS REQUIRED, THE BOILER REPRESENTATIVE IS RESPONSIBLE FOR PROVIDING LABOR + MATERIALS TO PROPERLY CONTROL.
9. FLUE PIPING SHALL BE PROVIDED AND SUBMITTED BY BOILER DISTRIBUTOR AFTER BOILER SUBMITTAL HAS BEEN APPROVED BY ENGINEER. FLUE PIPE SHALL NOT BE SUBMITTED BY ANY OTHER PARTY OTHER THAN THE BOILER SALES REPRESENTATIVE AWARDED THE PROJECT. FLUE PIPE SHALL BE INSTALLED BY MECHANICAL CONTRACTOR.
10. PROVIDE FIRE-TUBE BOILER RATED FOR OUTDOOR OPERATION.

HYDRONIC PUMP SCHEDULE

DESIGNATION	SERVICE	TYPE	NOTES	GPM	HEAD (FT. H20)	EFFICIENCY	RPM (MAX.)	MAX. BHP	MOTOR H.P.	MOTOR VOLTAGE	MANUFACTURER	MODEL NUMBER	MINIMUM NPSHR (FT.)
CHP-01	CH-01	SPLIT COUPLED VERTICAL IN-LINE	1-4	189	65'	69%	1,800	4.49	7.5	460 / 3 / 60	PENTAIRE	382B-SC	9.98
SHWP-01	BUILDING LOOP	SPLIT COUPLED VERTICAL IN-LINE	1-4	67	60'	57%	1,800	1.77	3	460 / 3 / 60	PENTAIRE	382B-SC	10.64

1. REFERENCE ELECTRICAL DRAWINGS FOR ELECTRICAL DATA.
2. PROVIDE PUMP RATED FOR OUTDOOR ENVIRONMENT AND WITH TEFC MOTOR ENCLOSURE.
3. PROVIDE VARIABLE FREQUENCY DRIVE FOR SOFT START AND BALANCING PURPOSES.
4. GREASABLE BEARINGS WITH ALEMITE FITTINGS ARE TO BE PROVIDED. SEALED BEARIGNS ARE UNACCEPTABLE.

SINGLE DUCT AIR TERMINAL UNIT SCHEDULE

TAG	INLET SIZE	COOLING CFM		STATIC PRESSURE		NC LEVELS		VOLTAGE	MANUFACTURER	MODEL
		MAX	MIN	INLET	UNIT P.D.	RAD.	DISCH.			
TB-2-01-01	6	320	160	1	0.35	13	13	120 / 1 / 60	TITUS	DESV

1. MAXIMUM NC LEVEL SHALL NOT EXCEED 25 AT 1 IN. STATIC PRESSURE.
2. REFERENCE ELECTRICAL DRAWINGS FOR ELECTRICAL DATA.
3. PROVIDE VOLUME CONTROL DAMPER, MULTI-POINT FLOW SENSOR, CONTROLLER ENCLOSURE, POWER TRANSFORMER. REFER TO AIR TERMINAL UNITS SPECIFICATION.
4. COORDINATE WITH DRAWINGS FOR RIGHT OR LEFT-HAND CASING CONFIGURATION PRIOR TO ORDERING.

SERIES FAN-POWERED AIR TERMINAL UNITS WITH HOT WATER HEAT SCHEDULE

TAG	INLET SIZE	COOLING CFM		STATIC PRESSURE		HOT WATER HEATING COIL							VOLTAGE (V / PH / HZ)	MANUFACTURER	MODEL
		MAX	MIN	INLET	UNIT P.D.	CFM	MAX. FACE VELOCITY (FPM)	TOTAL BTUH	EAT	LAT	GPM	EWT / LWT (°F)			
CVB-02-01-01	14	1,415	425	1	0.3	1415	750	31,939	64.1	85	1.6	140 / 100	277 / 1 / 60	TITUS	DTFS-F
CVB-02-01-02	10	755	227	1	0.3	755	750	20,385	64.1	85	1.0	140 / 100	277 / 1 / 60	TITUS	DTFS-F
CVB-02-01-03	8	610	183	1	0.3	610	750	16,470	64.1	85	0.8	140 / 100	277 / 1 / 60	TITUS	DTFS-F
CVB-02-01-04	8	600	180	1	0.3	600	750	16,200	64.1	85	0.8	140 / 100	277 / 1 / 60	TITUS	DTFS-F
CVB-02-01-05	10	930	279	1	0.3	930	750	25,110	64.1	85	1.3	140 / 100	277 / 1 / 60	TITUS	DTFS-F
CVB-02-01-06	12	1,050	315	1	0.3	1050	750	28,350	64.1	85	1.4	140 / 100	277 / 1 / 60	TITUS	DTFS-F
CVB-02-01-07	6	290	87	1	0.3	290	750	7,830	64.1	85	0.4	140 / 100	277 / 1 / 60	TITUS	DTFS-F
CVB-02-01-08	10	780	234	1	0.3	780	750	21,060	64.1	85	1.1	140 / 100	277 / 1 / 60	TITUS	DTFS-F
CVB-02-01-09	10	945	284	1	0.3	945	750	25,515	64.1	85	1.3	140 / 100	277 / 1 / 60	TITUS	DTFS-F
CVB-02-02-01	10	880	264	1	0.3	880	750	23,760	64.1	85	1.2	140 / 100	277 / 1 / 60	TITUS	DTFS-F
CVB-02-02-02	14	1,560	468	1	0.3	1560	750	42,120	64.1	85	2.1	140 / 100	277 / 1 / 60	TITUS	DTFS-F
CVB-02-02-03	12	1,110	333	1	0.3	1110	750	29,970	64.1	85	1.5	140 / 100	277 / 1 / 60	TITUS	DTFS-F
CVB-02-02-04	12	1,225	368	1	0.3	1225	750	33,075	64.1	85	1.7	140 / 100	277 / 1 / 60	TITUS	DTFS-F
CVB-02-02-05	12	1,380	414	1	0.3	1380	750	37,260	64.1	85	1.9	140 / 100	277 / 1 / 60	TITUS	DTFS-F
CVB-02-02-06	8	600	180	1	0.3	600	750	16,200	64.1	85	0.8	140 / 100	277 / 1 / 60	TITUS	DTFS-F

1. MAXIMUM NC LEVEL SHALL NOT EXCEED 35 AT 1 IN. STATIC PRESSURE.
2. PROVIDE FACTORY MOUNTED INDUCED AIR INLET SOUND SOUND ATTENUATOR. REFER TO SERIES FLOW FAN POWERED VARIABLE VOLUME UNITS WITH HOT WATER HEAT DETAIL.
3. PROVIDE FACTORY MOUNTED FUSED DISCONNECT SWITCH IN CONTROL PANEL.
4. HOT WATER COILS SHALL BE 1 OR 2 ROWS AND A MAXIMUM OF 10 FINS PER INCH. WATER PRESSURE DROP SHALL NOT EXCEED 5 FT AT SCHEDULED GPM AND AIR PRESSURE DROP THROUGH THE COIL SHALL NOT EXCEED 0.24" W.G.
5. COORDINATE WITH DRAWINGS FOR RIGHT OR LEFT-HAND CASING CONFIGURATION PRIOR TO ORDERING.

PBK
www.pbk.com
TX FIRM: BR 1608
HOUSTON, TX
713-965-0608

LEAF ENGINEERS

PKG 3A - GPHS NEW FIELDHOUSE

1000 Keene St.
Galena Park, TX 77547

CLIENT PROJECT NO: 240539

ISSUE FOR PROPOSAL

Galena Park ISD

KEY PLAN

NORTH: PLAN TRUE

STATE OF TEXAS
MITAL J. PATEL
111622
PROFESSIONAL ENGINEER
June 10, 2025
LEAF ENGINEERS
F-16672

CLIENT	
Galena Park ISD	
DATE: June 10, 2025	PROJECT NUMBER: 240539

DRAWING HISTORY

No.	Description	Date

CHECKED BY: MP

DRAWN BY: CT

MECHANICAL SCHEDULES

M-501

Plot Stamp:
6/6/2025 1:24:46 PM

MECHANICAL SCHEDULES
M-502
FOR BLUEBEAM LABELING/OCR:

0"
1"

DUCTLESS MINI-SPLIT SYSTEM AIR-CONDITIONERS SCHEDULE

EVAPORATOR SECTION			
INDOOR EVAPORATOR DESIGNATION	FCU-1913	FCU-IDF-1966	FCU-RISER RM-1907
SERVICE	1913-IDF	1960-IDF	1907-RISER ROOM
MANUFACTURER	MITSUBISHI	MITSUBISHI	MITSUBISHI
MODEL NUMBER	PKA	PKA	MSZ
TYPE	WALL MOUNTED	WALL MOUNTED	WALL MOUNTED
WEIGHT (LBS.)	28	28	28
NOTES	ALL	ALL	ALL
FAN DATA			
SUPPLY CFM (HIGH / MEDIUM / LOW) SPEED	455 / 385 / 310 / 265	455 / 385 / 310 / 265	455 / 385 / 310 / 265
COOLING / HEATING COIL	DX	DX	DX
NOMINAL TONNAGE	1.5 TONS	1.5 TONS	1.5 TONS
ENTERING AIR EVAP (DB/WB) °F - COOLING MODE	80°F / 67°F	80°F / 67°F	80°F / 67°F
ENTERING AIR EVAP (DB/WB) °F - HEATING MODE	-	-	70°F / 60°F
NOMINAL BTUH COOLING (BTUH)	18,000	18,000	18,000
NOMINAL BTUH HEATING (BTUH)	-	-	19,000
AIR-COOLED CONDENSER			
DESIGNATION	ACCU-1913	ACCU-IDF-1966	ACCU-RISER RM-1907
SERVES	FCU-1913	FCU-IDF-1966	FCU-RISER RM-1907
LOCATION	GROUND	ROOF	GROUND
MANUFACTURER	MITSUBISHI	MITSUBISHI	MITSUBISHI
MODEL NUMBER	PUY	PUY	MUZ
EFFICIENCY (SEER)	20.2	20.2	20.2
VOLTS/PH/HZ	208 / 1 / 60	208 / 1 / 60	208 / 1 / 60
MCA	11.0	11.0	11.0
MOCP	28	28	28
AMBIENT TEMPERATURE °F	105°F	105°F	105°F
WEIGHT (LBS.)	99	99	99

NOTES

1. REFERENCE ELECTRICAL DRAWINGS FOR ELECTRICAL DATA.
2. ESTIMATED EXTERNAL STATIC PRESSURE INCLUDES LOSSES THROUGH PLENUM, AIR DEVICES, ETC.
3. REFER TO SPECIFICATIONS FOR ADDITIONAL REQUIREMENTS.
4. PROVIDE REMOTE WALL MOUNTED PROGRAMMABLE THERMOSTAT WITH BACnet INTERFACE.
5. PROVIDE INVERTER DRIVEN COMPRESSOR.
6. INDOOR UNIT IS POWERED BY THE OUTDOOR UNIT. INTERCONNECTING POWER WIRING FROM OUTDOOR TO INDOOR UNIT IS BY ELECTRICAL CONTRACTOR. REFER TO ELECTRICAL DRAWINGS.
7. PROVIDE MATCHING CONDENSING UNIT FROM SAME MANUFACTURER.
8. MANUFACTURER SHALL PROVIDE A CONDENSATE PUMP. PUMP SHALL BE POWERED BY THE UNIT AND SHALL NOT START / STOP UNLESS THE UNIT IS ENERGIZED / DE-ENERGIZED.

HVAC FANS SCHEDULE

DESIGNATION	LOCATION	SERVICE	MANUFACTURER	MODEL NUMBER	NOTES	WEIGHTS (LBS)	FAN DATA						
							TYPE	DRIVE	CFM (LOW/HIGH)	STATIC PRESSURE (" W.G.)	MOTOR HP. (MIN.)	RPM (MAX.)	VOLT / Ø / HZ
EF-1-01	VARSITY LOCKERS	VARSITY LOCKERS	GREENHECK	SQ	1-3	76	CENTRIFUGAL	DIRECT	1,530	0.35	3/4	980	120 / 1 / 60
EF-1-02	JV LOCKERS	JV LOCKERS	GREENHECK	SQ	1-3	76	CENTRIFUGAL	DIRECT	1,670	0.35	3/4	1,065	120 / 1 / 60
EF-1-03	1909-GIRLS RR	RESTROOMS	GREENHECK	SQ	1-3	34	CENTRIFUGAL	DIRECT	450	0.35	1/10	1,520	120 / 1 / 60
EF-1-04	1914A-BBALL RR	LOCKERS AND RESTROOMS	GREENHECK	SQ	1-3	76	CENTRIFUGAL	DIRECT	2,500	0.35	3/4	1,130	120 / 1 / 60
EF-2-01	ROOF	AD OFFICE RR	GREENHECK	CUE	1-5	45	CENTRIFUGAL	DIRECT	150	0.25	1/10	1,030	120 / 1 / 60
EF-2-02	ROOF	COACH LOCKERS	GREENHECK	CUE	1-5	45	CENTRIFUGAL	DIRECT	575	0.30	1/10	1,460	120 / 1 / 60
EF-2-03	ROOF	RESTROOMS	GREENHECK	CUE	1-5	38	CENTRIFUGAL	DIRECT	200	0.25	1/15	1,390	120 / 1 / 60
CF-01	WEIGHT ROOM	WEIGHT ROOM	GREENHECK	CUE	1,6,7	50	CENTRIFUGAL	AXIAL	8674 / 9612	-	1/2	1,075	120 / 1 / 60
CF-02	WEIGHT ROOM	WEIGHT ROOM	GREENHECK	CUE	1,6,7	50	CENTRIFUGAL	AXIAL	8674 / 9612	-	1/2	1,075	120 / 1 / 60
CF-03	WEIGHT ROOM	WEIGHT ROOM	GREENHECK	CUE	1,6,7	50	CENTRIFUGAL	AXIAL	8674 / 9612	-	1/2	1,075	120 / 1 / 60
CF-04	WEIGHT ROOM	WEIGHT ROOM	GREENHECK	CUE	1,6,7	50	CENTRIFUGAL	AXIAL	8674 / 9612	-	1/2	1,075	120 / 1 / 60

1. REFERENCE ELECTRICAL DRAWINGS FOR ELECTRICAL DATA.
2. REFERENCE SPECIFICATIONS FOR SEQUENCE OF OPERATIONS.
3. FAN SHALL BE PROVIDED WITH GREENHECK VARI-FLOW® CONTROL AND ECM MOTOR. STARTER SHALL BE PROVIDED BY FAN MANUFACTURER. JUNCTION BOX AND VARI-FLOW TRANSFORMER SHALL BE FACTORY MOUNTED AND WIRED.
4. REFERENCE ARCHITECTURAL DRAWINGS FOR ROOF CURB DETAIL.
5. PROVIDE UPBLAST FAN DESIGNED TO WITHSTAND HIGH WIND SPEEDS UP TO 155 MPH.
6. PROVIDE WITH 2-SPEED FAN, TOTALLY ENCLOSED AND PERMANENTLY LUBRICATED MOTOR, OSCILLATING FAN, WITH WIRE GUARDS, OSHA COMPLIANT AND WALL BRACKET.
7. PROVIDE WALL MOUNTED CONTROLLER.

DIFFUSERS, REGISTERS & GRILLES SCHEDULE

DESIGNATION	MODEL NUMBER	NOISE CRITERIA (NC)	DESCRIPTION
A	TITUS TDCA-AA	25	24x24 MODULE SIZE, LAY-IN BORDER TYPE, 18"x18" NECK SIZE WITH ROUND DUCT CONNECTION SIZED AS INDICATED ON PLANS. NO OPPOSED BLADE DAMPER, ALL ALUMINUM CONSTRUCTION. FOR SHEETROCK CEILING INSTALLATION,PROVIDE WITH TITUS TRM ALUMINUM RAPID MOUNT FRAME.
B	TITUS PAR-AA	25	24x24 MODULE SIZE, LAY-IN BORDER TYPE, 22"x22" NECK SIZE UNLESS NOTED OTHERWISE. NO OPPOSED BLADE DAMPER, ALL ALUMINUM CONSTRUCTION. FOR SHEETROCK CEILING INSTALLATION, PROVIDE WITH TITUS TRM ALUMINUM RAPID MOUNT FRAME.
C	TITUS 300FS	25	DOUBLE DEFLECTION, 3/4" BLADE SPACING, FRONT BLADES PARALLEL TO SHORT DIMENSION, NO OPPOSED BLADEDAMPER, SURFACE MOUNTING BORDER TYPE WITH COUNTERSUNK HOLES, ALL ALUMINUM CONTSTRUCTION.
D	TITUS 350FL	25	3/4" BLADE SPACING, FRONT BLADES PARALLEL TO LONG DIMENSION, 35° FIXED DEFLECTION, NO OPPOSED BLADE DAMPER, SURFACE MOUNTING BORDER TYPE WITH COUNTERSUNK HOLES, ALL ALUMINUM CONSTRUCTION.
E	TITUS TDC-AA	25	12X12 MODULE SIZE, LAY-IN BORDER TYPE, 10"X10" NECK SIZE WITH ROUND DUCT CONNECTION SIZED AS INDICATED ON PLANS. NO OPPOSED BLADE DAMPER, ALL ALUMINUM CONSTRUCTION. FOR SHEETROCK CEILING INSTALLATION, PROVIDE WITH TITUS TRM ALUMINUM RAPID MOUNT FRAME.
F	TITUS PAR-AA	25	12X12 MODULE SIZE, LAY-IN BORDER TYPE, 10"x10" NECK SIZE UNLESS NOTED OTHERWISE. NO OPPOSED BLADE DAMPER, ALL ALUMINUM CONSTRUCTION. FOR SHEETROCK CEILING INSTALLATION, PROVIDE WITH TITUS TRM ALUMINUM RAPID MOUNT FRAME.

1. ALL DIFFUSER DESIGNATIONS MAY NOT BE USED ON PROJECT.
2. PROVIDE ROTO-TWIST CABLE OPERATED DAMPERS AT IN GYP BOARD CEILINGS.

HVAC GRAVITY VENTILATORS SCHEDULE

DESIGNATION	SERVICE	MANUFACTURER	MODEL	CFM	MAX. THROAT AREA (FT.²)/ THROAT SIZE (DIA./LxW)	P.D. (INCHES WG)	NOTES
RH-01	BUILDING RELIEF	GREENHECK	FGR	-	3.24 / 24" x 24"	-	1-4

1. MAXIMUM THROAT VELOCITY SHALL NOT EXCEED 600 FPM
2. PROVIDE STAINLESS STEEL BIRD SCREEN AND 12" PREFABRICATED ROOF CURB.
3. PROVIDE WITH GRAVITY WEIGHTED DAMPER SET TO OPEN AT 0.10" W.G.
4. PROVIDE ROOF HOOD DESIGNED TO WITHSTAND HIGH WIND SPEEDS UP TO 155 MPH.

ELECTRIC UNIT HEATER SCHEDULE

DESIGNATION	SERVICE	MANUFACTURER	MODEL	NOTES	BTUs	WEIGHT (LBS)	KW	AMPS	VOLT / Ø / HZ
EUH-1	PUMP ROOM	REZNOR	EUH	1-5	10,230	36	3.0	4.4	480 / 3 / 60

1. REFERENCE ELCTRICAL DRAWINGS FOR ELECTRICAL CHARACTERISTICS.
2. PROVIDE DIRECTIONAL LOUVER OUTLET.
3. PROVIDE ADJUSTABLE WALL MOUNTED THERMOSTAT AS INDICATED ON DRAWINGS.
4. UNIT HEATER SHALL BE FAN FORCED; RECOMMENDED MOUNTING HEIGHT: 9'-0".
5. PROVIDE FACTORY POWDER COATED EPOXY FINISH FOR CORROSIVE ATMOSPHERES.

PBK
www.pbk.com
TX FIRM: BR 1608
HOUSTON, TX
713-365-0608
LEAF ENGINEERS

PKG 3A - GPHS NEW FIELDHOUSE

1000 Keene St.
Galena Park, TX 77547

CLIENT PROJECT NO: 240539

ISSUE FOR PROPOSAL

KEY PLAN
NORTH: PLAN TRUE

STATE OF TEXAS
MITAL J. PATEL
111622
PROFESSIONAL ENGINEER

June 10, 2025
LEAF ENGINEERS
F-18672

CLIENT	
Galena Park ISD	
DATE: June 10, 2025	PROJECT NUMBER: 240539

DRAWING HISTORY

No.	Description	Date

CHECKED BY: MP
DRAWN BY: CT

MECHANICAL SCHEDULES

M-502

Plot Stamp:
6/6/2025 1:24:46 PM

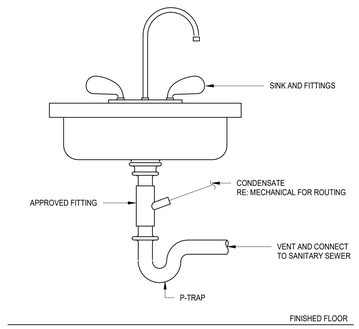

CONDENSATE TO SINK TAILPIECE DETAIL — 12
NOT TO SCALE

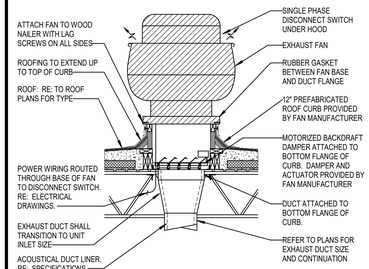

NOTES:
1. FOR THREE PHASE FANS, REFER TO THREE PHASE DISCONNECT SWITCH DETAIL
2. PROVIDE DUCT LINER IN THE FIRST 10 FEET OF DUCT FROM FAN.
3. ATTACH ROOF MOUNTED EQUIPMENT TO ROOF CURB AS REQUIRED TO RESIST UPLIFT DUE TO WINDS UP TO 120 M.P.H. SPEED.

UPBLAST ROOF MOUNTED EXHAUST FAN DETAIL — 11
NOT TO SCALE

LEGEND
- FACTORY WIRING
- FIELD WIRING

NOTES:
1. AC INPUT POWER IS INTERNALLY CONVERTED TO DC POWER. MOTOR ACCEPTS 0-10VDC FROM ITS CONTROLLER. MOTOR OPERATES FROM 2-10 VOLTS. BELOW 2-10 VOLTS THE MOTOR IS "OFF". FAN CAN BE SET TO (2) TWO INDEPENDENT SPEEDS (A OR B). BAS CONTROLS WILL SWITCH BETWEEN SPEEDS AS INDICATED IN THE WIRING ABOVE WITH A SPDT RELAY.
2. TEST AND BALANCE CONTRACTOR SHALL SET SPEED CONTROLS BASED ON CFM INDICATED ON HVAC FAN SCHEDULE.

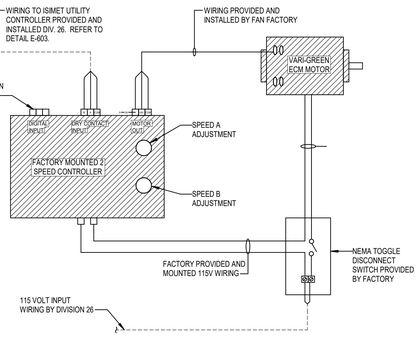

VARI-GREEN MULTI-SPEED ECM MOTOR AND CONTROL DIAGRAM — 10
NOT TO SCALE

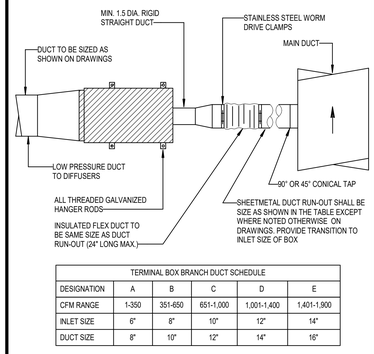

TERMINAL BOX BRANCH DUCT SCHEDULE

DESIGNATION	A	B	C	D	E
CFM RANGE	1-350	351-650	651-1,000	1,001-1,400	1,401-1,900
INLET SIZE	6"	8"	10"	12"	14"
DUCT SIZE	8"	10"	12"	14"	16"

SINGLE DUCT AIR TERMINAL UNIT DETAIL — 9
NOT TO SCALE

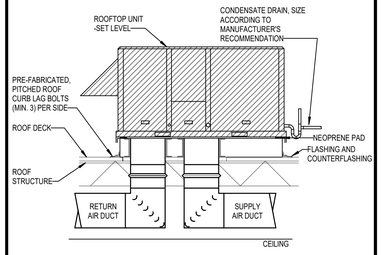

ROOFTOP AIR CONDITIONING UNIT DETAIL — 8
NOT TO SCALE

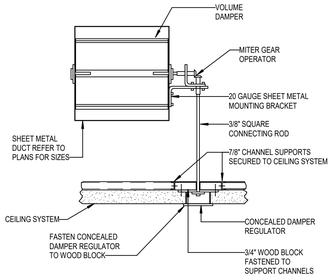

DAMPER OPERATOR IN NON - ACCESSIBLE CEILINGS DETAIL — 7
NOT TO SCALE

NOTE: THE FLANGED BELLMOUTH FITTING MUST BE PROVIDED, WHERE HEIGHT OF DUCT SHOWN ON PLANS CAN ACCOMMODATE THE FITTING. ONLY WHERE THE DUCT HEIGHT DOES NOT ALLOW THE INSTALLATION OF BELLMOUTH FITTING, PROVIDE SPIN-IN FITTING. FLEX DUCT MAY BE LOCATED IN RISER OR HORIZONTAL RUN.

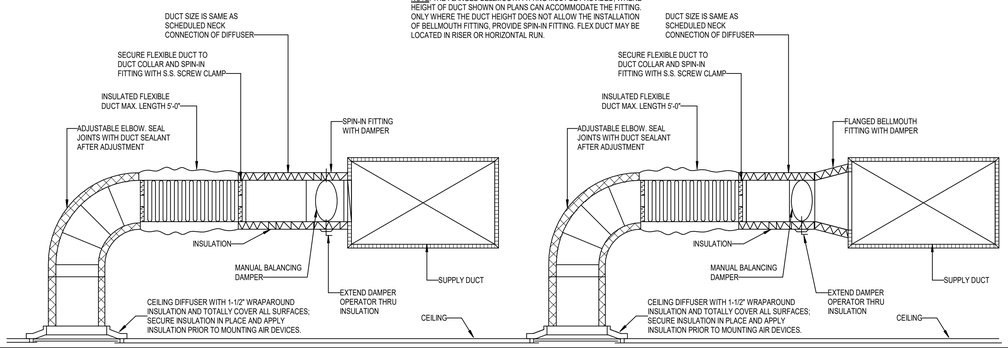

CEILING DIFFUSER CONNECTION WITH SPIN-IN / BELLMOUTH FITTINGS DETAIL — 6
NOT TO SCALE

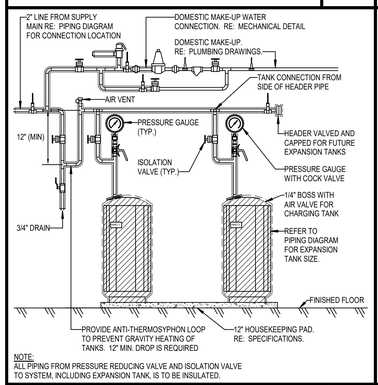

NOTE:
ALL PIPING FROM PRESSURE REDUCING VALVE AND ISOLATION VALVE TO SYSTEM. INCLUDING EXPANSION TANK, IS TO BE INSULATED.

HOT WATER BLADDER TYPE EXPANSION TANK PIPING DETAIL — 5
NOT TO SCALE

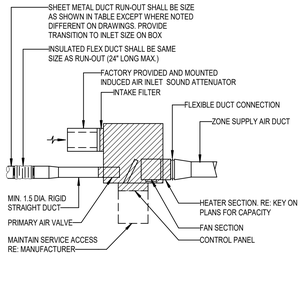

NOTE:
1. HOT WATER COILS SHALL BE 1 OR 2 ROWS AND A MAXIMUM OF 10 FINS PER INCH. ENTERING WATER TEMPERATURE SHALL BE 180° AND WATER PRESSURE DROP SHALL NOT EXCEED 5 FT. W.G. AT SCHEDULED GPM. THE AIR PRESSURE DROP THROUGH THE COIL SHALL NOT EXCEED 0.24" WG. THE MAXIMUM FACE VELOCITY SHALL BE 750 FPM.
2. MAXIMUM VELOCITY AT BOX INLET SHALL NOT EXCEED 2000 FPM.
3. SIZE ALL FAN MOTORS TO OVERCOME 0.35" EXTERNAL STATIC PRESSURE. MINIMUM MOTOR SIZES SHALL BE AS NOTED IN THE TABLE.
4. HEATING COIL NOT REQUIRED IF CAPACITY IS NOT LISTED IN KEY.
5. FAN ASSEMBLY: ECM VARIABLE SPEED MOTOR; 277V/1PH/60HZ. COORDINATE WITH ELECTRICAL PLANS. REFER TO AIR TERMINAL SPECS FOR FURTHER REQUIREMENTS.
6. ANY DEVIATIONS OF ELECTRICAL CHARACTERISTICS LISTED ON CHART BELOW RESULTING IN POWER DESIGN CHANGES SHALL BE RESPONSIBILITY OF CONTRACTOR.

TERMINAL BOX SCHEDULE - BASED ON TITUS DTFS-F

DESIGNATION	A	B	C	D	E	G
CFM RANGE	1-350	351-650	651-1,000	1,000-1,400	1,401-2,000	2,001-2,600
INLET SIZE	6"	8"	10"	12"	14"	16"
DUCT SIZE	8"	10"	12"	14"	16"	18"
HP (MAX)	1/3	1/3	1/3	1/2	3/4	(2) @ 3/4
MOTOR AMPS (MAX)	0.76	1.4	1.9	3.3	4.9	11.8

SERIES FAN - POWERED AIR TERMINAL UNIT WITH HOT WATER HEAT DETAIL — 4
NOT TO SCALE

SPLITTER

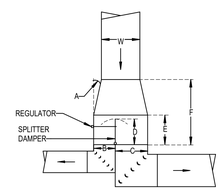

DIMENSIONS
1. ANGLE 'A' TO BE 15° OR LESS (BOTH SIDES)
2. SEE FLOOR PLANS FOR B, C, & W.
3. SPLITTER DAMPER LENGTH D = 1.5 x B
4. E = D + 3" MINIMUM
5. VERTICAL DIMENSION TO BE MAINTAINED THRU F.
6. CHANGE IN VERTICAL DIMENSION TO OCCUR AFTER TURNS.

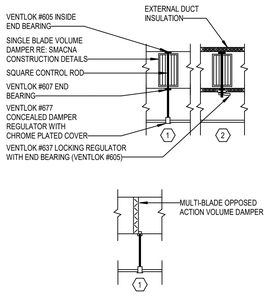

1 DAMPER ABOVE INACCESSIBLE CEILING
2 DAMPER ABOVE LAY-IN CEILING

DUCT CONSTRUCTION DETAIL — 1
NOT TO SCALE

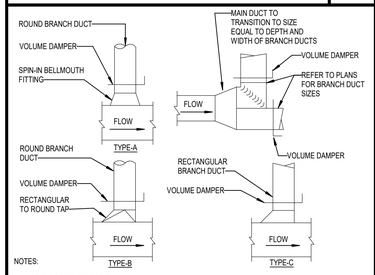

NOTES:
1. USE TYPE "A" CONNECTION ONLY FOR BRANCHES TO SINGLE DIFFUSERS, TERMINAL BOXES OR GRILLES FROM THE MAIN.
2. USE TYPE "B" OR "C" BRANCH WHERE BRANCH FLOW IS 20% OR LESS OF MAIN.
3. NO DAMPERS ARE REQ'D ON VAV SYSTEMS BETWEEN AIR HANDLING UNIT AND VAV TERMINAL BOXES.
4. USE TEE SPLIT WHERE BRANCH FLOW IS MORE THAN 20% OF MAIN.
5. FOR TYPE "A" CONNECTION TO DIFFUSERS, THE ROUND DUCT RUN-OUT SIZE SHALL BE THE SAME SIZE AS THE NECK OF DIFFUSER, UNLESS OTHERWISE INDICATED.
4. PROVIDE VOLUME DAMPERS ON SUPPLY, OUTSIDE AIR, RETURN AND EXHAUST DUCT SYSTEMS AS SHOWN.

BRANCH DUCT DETAILS — 3
NOT TO SCALE

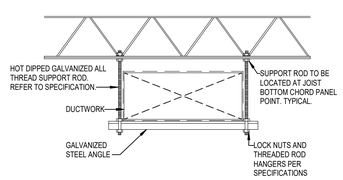

NOTES:
1. FOLLOW SMACNA GUIDELINES FOR SPACING REQUIREMENTS.
2. CONTRACTOR SHALL OBTAIN STRUCTURAL ENGINEER APPROVAL FOR ANY AND ALL DUCTWORK MOUNTING DETAILS AT CONCRETE.
3. CONTRACTOR SHALL INSTALL DUCT HANGER ROD WITHIN 3" AT JOIST BOTTOM CHORD PANEL POINT. IF HANGER ROD DOES NOT OCCUR WITHIN 3" AT BOTTOM CHORD PANEL POINT THAN LOAD SHALL NOT EXCEED 100# CONCENTRATED LOAD AT EACH THREADED ROD HANGER LOCATION.
4. REFER TO STRUCTURAL DRAWINGS FOR ADDITIONAL JOIST REINFORCEMENTS REQUIREMENTS IF DUCT HANGER RODS ARE MORE THAN 3" FROM JOIST BOTTOM CHORD PANEL POINT AND EXCEED 100# CONCENTRATED LOAD.
5. IF DUCT RUNS PARALLEL WITH STRUCTURE, PROVIDE SECURED UNISTRUT HEADER LAID ACROSS MULTIPLE JOISTS MOUNTED TO JOIST BOTTOM CHORD.
6. BEAM CLAMPS AND FLANGE CLIPS ARE NOT ACCEPTABLE FOR JOISTS.

DUCT HANGER TRAPEZE DETAIL — 2
NOT TO SCALE

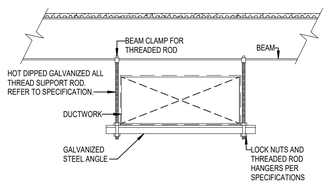

NOTES:
1. FOLLOW SMACNA GUIDELINES FOR SPACING REQUIREMENTS.
2. CONTRACTOR SHALL OBTAIN STRUCTURAL ENGINEER APPROVAL FOR ANY AND ALL DUCTWORK MOUNTING DETAILS AT CONCRETE.

AIR EXTRACTOR AT SIDEWALL REGISTER

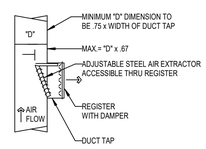

1. MAX. WIDTH OF DUCT TAP SHALL BE 48". PROVIDE BOTTOM BRACKET FOR SUPPORT WHERE EXTRACTOR EXCEEDS 16".
2. MAX. HEIGHT OF DUCT TAP SHALL BE 12" (MIN. = 4")

SIDEWALL REGISTER AT END OF DUCT

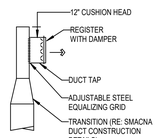

SIDEWALL REGISTER AT END OF DUCT — 0
NOT TO SCALE

MECHANICAL DETAILS
M-601
FOR BLUEBEAM LABELING/OCR:

PBK
www.pbk.com
TX FIRM: BR 1608
HOUSTON, TX
713-365-0608

LEAF ENGINEERS

PKG 3A - GPHS NEW FIELDHOUSE
1000 Keene St.
Galena Park, TX 77547

CLIENT PROJECT NO: 240539
ISSUE FOR PROPOSAL

Galena Park ISD

KEY PLAN
NORTH: PLAN TRUE

STATE OF TEXAS
MITAL J. PATEL
111622
June 10, 2025
LEAF ENGINEERS
F-18672

CLIENT	
Galena Park ISD	
DATE: June 10, 2025	PROJECT NUMBER: 240539

DRAWING HISTORY

No.	Description	Date

CHECKED BY: MP
DRAWN BY: CT

MECHANICAL DETAILS

M-601

Plot Stamp:
6/6/2025 1:24:47 PM

MECHANICAL DETAILS
M-602
FOR BLUEBEAM LABELING/OCR:

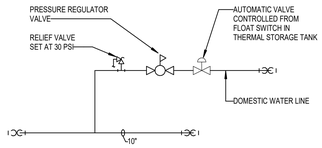

CHILLED WATER SYSTEM FILL STATION PIPING DETAIL
NOT TO SCALE

16

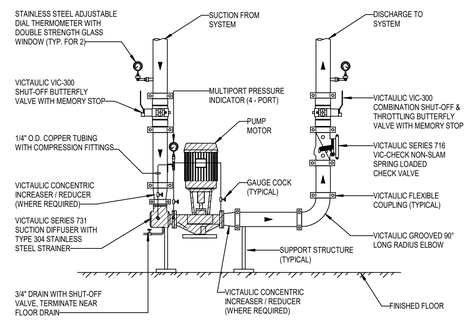

NOTES:

1. CHILLED WATER PUMPS SHALL BE INSULATED WITH RIGID INSULATION BOARD, TWO INCH THICK, CUT AND FORMED INTO A BOX AND SECURED IN PLACE WITH 3/4" WIDE x 0.20 GALVANIZED BANDS. REFER TO SPECIFICATION 23 07 16 FOR FURTHER PUMP INSULATION REQUIREMENTS.
2. BUTTERFLY AND CHECK VALVES SHALL BE LINE SIZE.
3. CONTRACTOR SHALL PROVIDE AND INSTALL MULTI-PORT (4 PORT) PRESSURE INDICATOR WITH 1/4" O.D. COPPER TUBING WITH COMPRESSION FITTINGS AND GAUGE COCKS.
4. PUMP SUCTION: PROVIDE THERMOMETER, VICTAULIC VIC-300 SHUT-OFF BUTTERFLY VALVE WITH MEMORY STOP AND VICTAULIC SERIES 731-D SUCTION DIFFUSER WITH TYPE 304 STAINLESS STEEL STRAINER.
5. PUMP DISCHARGE: PROVIDED THERMOMETER, VICTAULIC VIC- 300 COMBINATION SHUT-OFF / THROTTLING / BALANCING BUTTERFLY VALVE WITH MEMORY STOP, VICTAULIC SERIES 716 VIC-CHECK NON-SLAM SPRING LOADED CHECK VALVE AND VICTAULIC 90° LONG RADIUS ELBOW.
6. PROVIDE RIGID VICTAULIC COUPLING STYLE 107 FOR PIPE SIZES LESS THAN 12" AND VICTAULIC STYLE W07 AGS FOR PIPING 14" AND GREATER.
7. BUTTERFLY VALVES SHALL BE PROVIDED WITH MEMORY STOP REGARDLESS OF SIZE. FOR BUTTERFLY VALVES LARGER THAN 6" PROVIDE HAND-WHEEL AND GEAR DRIVE WITH MEMORY STOP.
8. VALVES SHALL BE INSTALLED IN ACCESSIBLE LOCATIONS TO PERMIT REMOVAL OF BONNET
9. PIPE HANGERS SHALL BE SIZED TO SUPPORT THE WEIGHT OF PUMP, PIPING AND FITTINGS.

SPLIT - COUPLED VERTICAL IN - LINE (VICTAULIC PUMP STACK) PIPING DETAIL
NOT TO SCALE

15

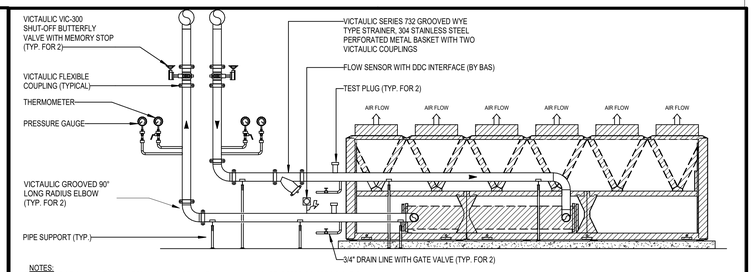

NOTES:

1. EXTERIOR PIPE SHALL BE INSULATED AND WRAPPED WITH ALUMINUM JACKET; REFER TO SPECIFICATION SECTION 23 07 19.
2. VICTAULIC SHUT-OFF VALVES SHALL BE LINE SIZE.
3. FLOW SWITCH SHALL BE IN INSTALLED IN UPRIGHT POSITION LOCATED IN HORIZONTAL SECTION OF PIPE RUN OF AT LEAST (5) FIVE PIPE DIAMETERS ON EACH SIDE OF THE FLOW SWITCH; FLOW SWITCH MAY BE INSTALLED IN VERTICAL PIPE IF THE FLOW IS IN THE UPRIGHT DIRECTION.
4. VICTAULIC BUTTERFLY VALVES SHALL BE PROVIDED WITH MEMORY STOP REGARDLESS OF SIZE. FOR BUTTERFLY VALVES LARGER THAN 6" PROVIDE HAND-WHEEL AND GEAR DRIVE WITH MEMORY STOP.
5. PROVIDE TYPE WSW - TWO LAYERS OF 3/8"-INCH THICK NEOPRENE PAD CONSISTING OF SQUARE WAFFLE MODULES SEPARATED BY A 16-GAUGE GALVANIZED SHIM. REFER TO SPECIFICATION SECTION 23 05 48.
6. PROVIDE A MINIMUM OF (3) THREE VICTAULIC FLEXIBLE COUPLINGS ON CHILLER INLET AND OUTLET FOR REDUCTION OF THE TRANSMISSION OF VIBRATION; FLEXIBLE PIPE CONNECTORS NOT REQUIRED WHEN UTILIZING 3 VICTAULIC FLEX. COUPLINGS.
7. PROVIDE FLEXIBLE VICTAULIC GROOVED COUPLING STYLE 177 FOR PIPE SIZES LESS THAN 12" AND VICTAULIC STYLE W77 AGS FOR PIPING 14" AND GREATER.

AIR - COOLED CHILLER PIPING (VICTAULIC CONNECTION) DETAIL
NOT TO SCALE

14

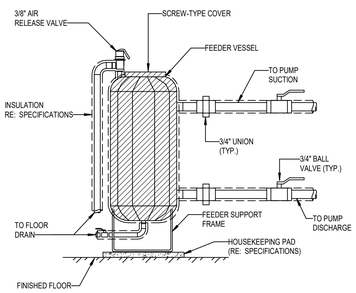

CHEMICAL SHOT FEEDER PIPING DETAIL
NOT TO SCALE

13

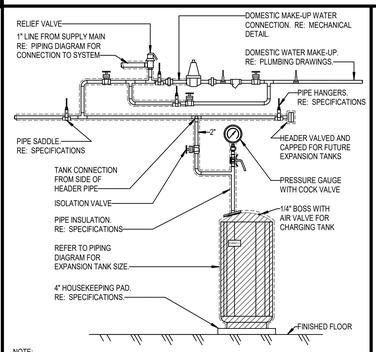

NOTE:
ALL PIPING FROM PRESSURE REDUCING VALVE AND ISOLATION VALVE TO SYSTEM, INCLUDING EXPANSION TANK, IS TO BE INSULATED.

CHILLED WATER BLADDER TYPE EXPANSION TANK PIPING DETAIL
NOT TO SCALE

12

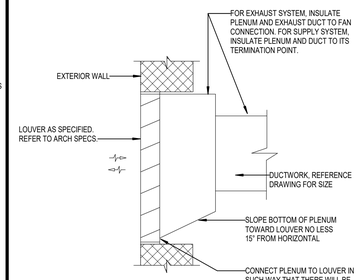

DUCTWORK AT LOUVER CONNECTION DETAIL
NOT TO SCALE

11

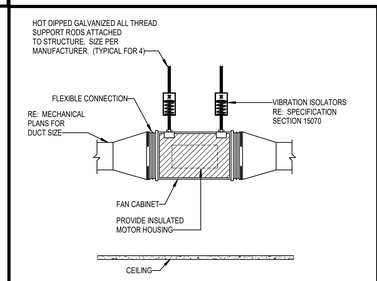

NOTES:

1. INSULATE FAN INTERIOR WITH 1" THICK 3.0 P.F.C. DENSITY ACOUSTICAL LINER WITH 100% ADHESIVE AND STICKPINS PER SMACNA. COAT AIR SIDE WITH FOSTER 40-20 ANTI-MICROBIAL COATING.
2. FAN SHALL INCLUDE (2) REMOVABLE ACCESS PANELS LOCATED PERPENDICULAR TO THE MOTOR MOUNTING PANEL. ACCESS PANELS MUST BE OF SUFFICIENT SIZE TO PERMIT EASY ACCESS TO ALL INTERIOR COMPONENTS.

IN-LINE EXHAUST FAN DETAIL
NOT TO SCALE

10

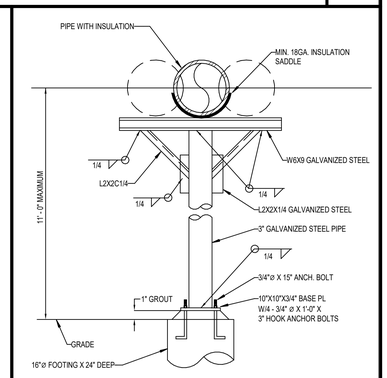

SINGLE COLUMN PIPE STANCHION DETAIL
NOT TO SCALE

9

HUSHCORE ECONOMY NOISE REDUCTION SYSTEM WITH INTEGRATED SCROLL CHILLER SCHEMATIC DETAIL

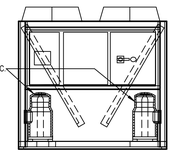

SCROLL CHILLER SECTION DETAIL

CHILLER NOISE REDUCTION SYSTEM
HUSHCORE™ ECONOMY™ Chiller Noise Reduction System shall consist of HUSH COVER™ Removable Blanket Insulation, a composite of acoustical barriers and absorbers with a finished surface mass of 3lb. per sq. ft., Velcro flaps , to cover compressors ONLY for the specified chiller. The covers shall be connected together by means of clothe straps with "D" rings and Velcro fasteners. Stainless steel wire tie fastening assemblies are not acceptable. The complete system shall meet chiller manufrers published data pertaining to heat loss of compressors, condenser fan airflow, and ensure no "de-rating" of chiller performance. The complete system shall meet all environmental conditions such as temperature, wind, shrinkage, UV-rays, and moisture. OEM Factory Acoustical Packages by the Chiller Manufacturer are not acceptable.

ACOUSTICAL PERFORMANCE
All Noise Control Materials Manufacturer's shall deliver a complete submittal including a copy of an acoustical report in compliance with the acoustical performance as listed in this section. The complete HUSHCORE™ system typical noise reductions are **3 to 5 dBA** at a receiver location no more than 6' above the base of the chiller and within the acoustic shadow zone. The HUSH COVER™ system shall meet the following acoustical performance:

BRD-NOISE AND VIBRATION CONTROL HUSHCORE AIR-COOLED SCROLL CHILLER NOISE REDUCTION SYSTEM DETAIL
NOT TO SCALE

8

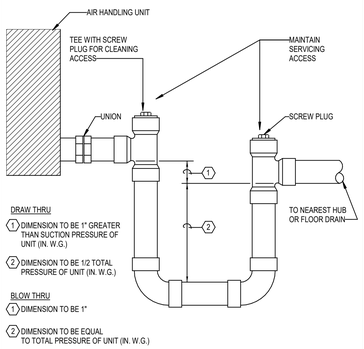

DRAW THRU
1 DIMENSION TO BE 1" GREATER THAN SUCTION PRESSURE OF UNIT (IN. W.G.)
2 DIMENSION TO BE 1/2 TOTAL PRESSURE OF UNIT (IN. W.G.)

BLOW THRU
1 DIMENSION TO BE 1"
2 DIMENSION TO BE EQUAL TO TOTAL PRESSURE OF UNIT (IN. W.G.)

CONDENSATE TRAP PIPING DETAIL
NOT TO SCALE

7

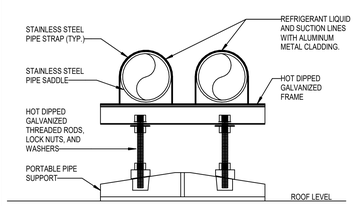

NOTE:

1. PORTABLE PIPE SUPPORTS SHALL BE MANUFACTURED BY ADVANCED SUPPORT PRODUCT, INC., MODEL SS1000A/SS2000-CB-ADJ (AS APPLICABLE) OR PRIOR APPROVAL EQUAL.
2. ALL METAL MATERIALS SHALL BE HOT-DIPPED GALVANIZED.
3. CONTRACTOR SHALL FIELD GALVANIZE ALL SURFACES THAT ARE EXPOSED DUE TO FIELD CUTS/ MODIFICATIONS.

ROOF MOUNTED PORTABLE REFRIGERANT PIPE SUPPORT DETAIL
NOT TO SCALE

6

HUSH CORE™ DECK™
ACOUSTICAL CURB SYSTEM WITH INTEGRATED ROOFTOP UNIT DETAIL

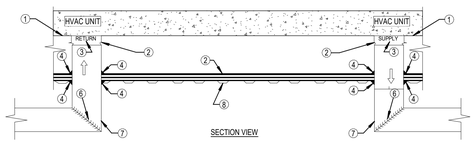

IN-CURB ACOUSTICAL SYSTEM

The DECK "In-Curb Acoustical System shall meet Class "A" Spread and Smoke Develop as per ASTME-84. The multi-layer composite system, model DS-49 shall reduce radiated noise inside the curb. HUSH SEALANT model HSAC-100 Acoustical grade caulk shall be used around all curb perimeter edges and without contacting the duct wall. The In-curb acoustical DECK System shall meet STC-52 in accordance with test procedure ASTM-E90-10. System shall be by BRD Noise & Vibration Control, Inc. (610)863-6300.

Freq. (Hz)	80	100	125	160	200	250	315	400	500	630	800
TL (dB)	17	20	25	31	33	39	43	48	52	54	55

Freq. (Hz)	1000	1250	1600	2000	2500	3150	4000	5000	6300	8000	STC
TL (dB)	59	62	63	62	63	62	67	66	70	74	49

BY RTU UNIT MANUFACTURER
1. RTU BASE
2. INTEGRAL CURB DUCT SUPPORT
3. RTU OPENING
4. HUSH SEALANT ACOUSTICAL GRADE CAULK AT ALL DUCT DROPS & CURB PERIMETER
5. HUSHCORE™ DECK™ SYSTEM, IN CURB ACOUSTICAL TREATMENT

BY HVAC CONTRACTOR
6. TURNING VANE
7. DUCT WORK
8. ROOF DECK FLASHED TO WITHIN 1/4" OF ALL DUCT DROPS BUT NOT IN CONTACT WITH DUCT WALL

HUSHCORE DECK ACOUSTICAL CURB SYSTEM WITH INTEGRATED ROOFTOP UNIT DETAIL
NOT TO SCALE

5

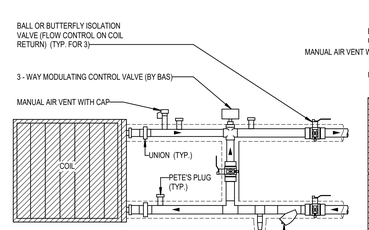

SINGLE COIL

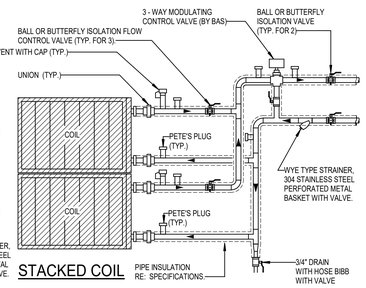

STACKED COIL

NOTES:
1. REFER TO CONDENSATE DRAIN DETAIL FOR DRAIN PAN TRAP REQUIREMENTS
2. PROVIDE PIPE REDUCERS FROM INLET/OUTLET OF CONTROL VALVES AS REQUIRED
3. ISOLATION AND FLOW CONTROL/BALANCING VALVES SHALL MATCH BRANCH PIPING SIZE. REFER TO MECHANICAL PIPING DIAGRAMS FOR BRANCH PIPE SIZES.
4. FOR ALL FLOW CONTROL BALANCING VALVES, ALL HANDLES AND PRESSURE/SENSOR PORTS SHALL HAVE EXTENDED STEMS TO ACCOMMODATE INSULATION.
5. MECHANICAL CONTRACTOR SHALL COORDINATE PIPE INSULATION THICKNESS WITH BALANCING VALVE PROVIDER.
6. ADDITIONAL ISOLATION VALVES SHALL BE PROVIDED ON SUPPLY AND RETURN LINES AS SHOWN TO COMPLETELY ISOLATE COIL AND AVOID DRAINING ENTIRE HYDRONIC LOOP.

COIL PIPING ACCESSORIES WITH 3-WAY CONTROL VALVE CONNECTION DETAIL
NOT TO SCALE

4

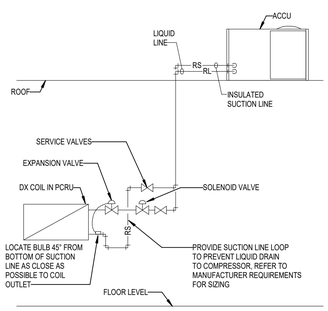

REFRIGERANT PIPING - ROOF ACCU DETAIL
NOT TO SCALE

3

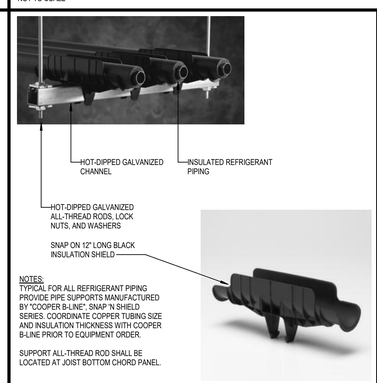

NOTES:
TYPICAL FOR ALL REFRIGERANT PIPING PROVIDE PIPE SUPPORTS MANUFACTURED BY "COOPER B-LINE", SNAP 'N SHIELD SERIES. COORDINATE COPPER TUBING SIZE AND INSULATION THICKNESS WITH COOPER B-LINE PRIOR TO EQUIPMENT ORDER.

SUPPORT ALL-THREAD ROD SHALL BE LOCATED AT JOIST BOTTOM CHORD PANEL.

SNAP 'N SHIELD REFRIGERANT PIPING SUPPORT DETAIL
NOT TO SCALE

2

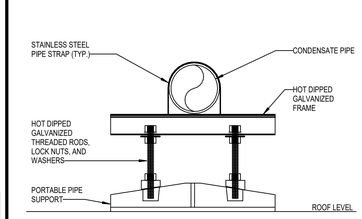

NOTES:

1. PORTABLE PIPE SUPPORTS SHALL BE MANUFACTURED BY ADVANCED SUPPORT PRODUCT, INC., MODEL SS1000A/SS2000-CB-ADJ (AS APPLICABLE) OR PRIOR APPROVED EQUAL.
2. ALL METALS MATERIALS SHALL BE HOT-DIPPED GALVANIZED.
3. CONTRACTOR SHALL FIELD GALVANIZE ALL SURFACES THAT ARE EXPOSED DUE TO FIELD CUTS/ MODIFICATIONS.

CONDENSATE PIPE SUPPORT DETAIL
NOT TO SCALE

1

PBK
www.pbk.com
TX FIRM: BR 1608
HOUSTON, TX
713-365-0608
LEAF ENGINEERS

PKG 3A - GPHS NEW FIELDHOUSE
1000 Keene St.
Galena Park, TX 77547

CLIENT PROJECT NO: 240539
ISSUE FOR PROPOSAL

KEY PLAN
NORTH: PLAN TRUE

STATE OF TEXAS
MITAL J. PATEL
111622
June 10, 2025
LEAF ENGINEERS
F-18672

CLIENT	
Galena Park ISD	
DATE	PROJECT NUMBER
June 10, 2025	240539

DRAWING HISTORY

No.	Description	Date

CHECKED BY: MP
DRAWN BY: CT

MECHANICAL DETAILS

M-602

Plot Stamp:
6/6/2025 1:24:47 PM

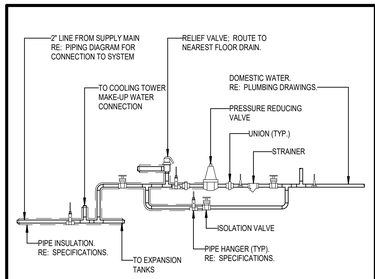

NOTE:
ALL PIPING FROM PRESSURE REDUCING VALVE AND ISOLATION VALVE TO SYSTEM IS TO BE INSULATED

DOMESTIC MAKE - UP WATER CONNECTION DETAIL
NOT TO SCALE
13

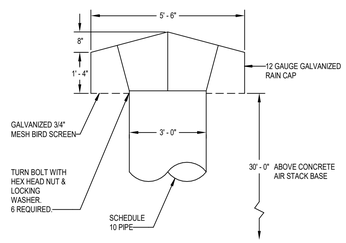

RAIN CAP DETAIL
NOT TO SCALE
12

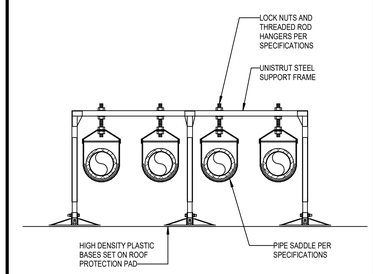

NOTE:
1. SPACE PIPE SUPPORTS AT MAXIMUM INTERVALS OF 10'-0" ON CENTER.
2. CONTRACTOR SHALL FIELD GALVANIZE ALL SURFACES THAT ARE EXPOSED DUE TO FIELD CUTS/ MODIFICATIONS.

ROOF MOUNTED PORTABLE PIPE SUPPORT(4-PIPE CLEVIS HANGER)
NOT TO SCALE
11

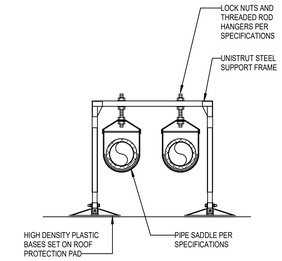

NOTE:
1. SPACE PIPE SUPPORTS AT MAXIMUM INTERVALS OF 10'-0" ON CENTER.
2. CONTRACTOR SHALL FIELD GALVANIZE ALL SURFACES THAT ARE EXPOSED DUE TO FIELD CUTS/ MODIFICATIONS.

ROOF MOUNTED PORTABLE PIPE SUPPORT (2-PIPE CLEVIS HANGER)
NOT TO SCALE
10

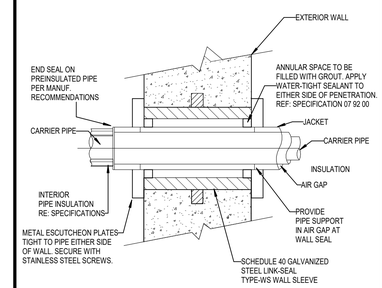

NOTE:
PROVIDE PIPE ANCHOR WITHIN 5' - 0" OF BUILDING WALL

ABOVE GRADE EXTERIOR WALL PIPE PENETRATION DETAIL
NOT TO SCALE
9

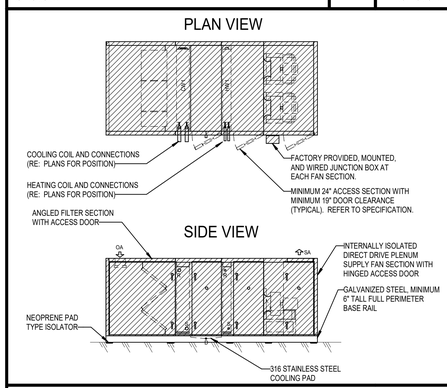

NOTES:
1. REFER TO SPECIFICATION SECTION 23 73 13 MODULAR INDOOR CENTRAL - STATION AIR - HANDLING UNITS FOR FURTHER REQUIREMENTS.
2. REFER TO MODULAR INDOOR CENTRAL - STATION AIR HANDLING UNIT EQUIPMENT SCHEDULE FOR PERFORMANCE, COOLINGHEATING COIL ARRANGEMENT, AND DIMENSIONAL DATA.
3. PROVIDE INTERNAL FLEXIBLE CONNECTION BETWEEN FAN AND AIR UNIT CASING. FLEXIBLE CONNECTION BETWEEN AIR UNIT CASING AND CONNECTING DUCT SHALL NOT BE PROVIDED WHEN FAN IS INTERNALLY ISOLATED WITH FLEXIBLE CONNECTION TO CASING.
4. PROVIDE MOTOR SHAFT GROUNDING KIT FOR ALL AIR HANDLING UNIT MOTORS. KITS SHALL BE FACTORY PROVIDED AND INSTALLED PRIOR TO SHIPMENT.
5. FOR AIR HANDLING UNITS WITH MORE THAN ONE FAN AND TO ALLOW FOR A SINGLE CONNECTION TO A SINGLE VARIABLE FREQUENCY DRIVE, PROVIDE A FACTORY MOUNTED AND WIRED OVERLOAD PANEL.
6. CONTRACTOR SHALL PROVIDE TRAPPED CONDENSATE DRAIN LINE ROUTED TO NEAREST APPROVED FLOOR DRAIN AND MUST NOT POSE A TRIP HAZARD.
7. CONTRACTOR SHALL INSTALL PIPING WITH PIPING SPECIALTIES TO AIR HANDLING UNIT COILS IN A MANNER SUCH THAT ALL ACCESS DOORS SHALL BE ABLE TO FULLY SWING OPEN AND TO ALLOW SERVICE AND MAINTENANCE.
8. PROVIDE MINIMUM 24" ACCESS SECTION WITH MINIMUM 19" DOOR CLEARANCE; PROVIDE ACCESS SECTIONS BETWEEN PARALLEL COIL SECTIONS, UPSTREAM OF COIL SECTIONS, UPSTREAM AND DOWNSTREAM OF ENERGY RECOVERY WHEELS, IN FAN SECTIONS, FILTER SECTIONS AND MIXING BOXES. SECTIONS SHALL BE OF SAME CONSTRUCTION AS THE REST OF THE UNIT. DOUBLE WALL GALVANIZED STEEL CONSTRUCTION.

TYPICAL MODULAR INDOOR CENTRAL - STATION OUTSIDE AIR - HANDLING UNIT DETAIL
NOT TO SCALE
8

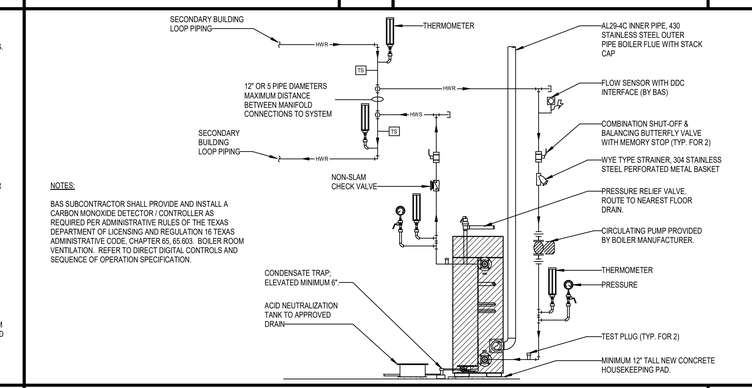

NOTES:
BAS SUBCONTRACTOR SHALL PROVIDE AND INSTALL A CARBON MONOXIDE DETECTOR / CONTROLLER AS REQUIRED PER ADMINISTRATIVE RULES OF THE TEXAS DEPARTMENT OF LICENSING AND REGULATION 16 TEXAS ADMINISTRATIVE CODE, CHAPTER 65, 65.603. BOILER ROOM VENTILATION. REFER TO DIRECT DIGITAL CONTROLS AND SEQUENCE OF OPERATION SPECIFICATION.

CONDENSING BOILER PIPING DETAIL
NOT TO SCALE
7

PIPE STANCHION DETAIL
NOT TO SCALE
6

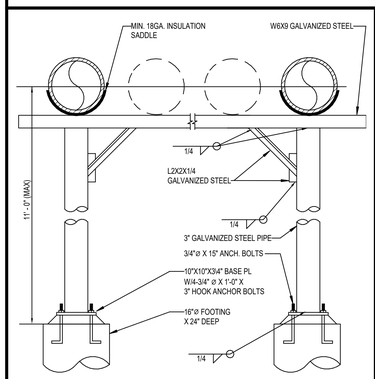

DOUBLE PIPE STANCHION PIPE SUPPORT DETAIL
NOT TO SCALE
5

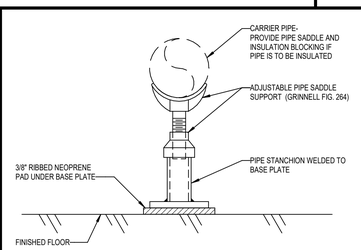

BASE PLATE DIMENSIONS		
PIPE SIZE	PIPE STANCHION SIZE	BASE PLATE SIZE
2 1/2" - 3"	2 1/2"	3/8"x6"x6"
4" - 12"	3"	3/8"x8"x8"
14" - 16"	4"	3/8"x6"x6"
18" - 36"	6"	3/8"x10"x10"

FLOOR MOUNTED PIPE STAND DETAIL
NOT TO SCALE
4

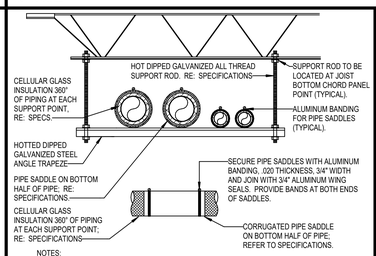

NOTES:
1. REFER TO SPECIFICATIONS FOR SPACING AND VIBRATION ISOLATION REQUIREMENTS.
2. CONTRACTOR SHALL OBTAIN STRUCTURAL ENGINEER APPROVAL FOR ANY AND ALL PIPE MOUNTING DETAILS AT CONCRETE OR STEEL STRUCTURE
3. IF PIPE RUNS PARALLEL WITH STRUCTURE, PROVIDE SECURED UNISTRUT HEADER LAID ACROSS MULTIPLE JOISTS MOUNTED TO JOIST BOTTOM CHORD.
4. REFER TO STRUCTURAL DRAWINGS FOR ADDITIONAL JOIST REINFORCEMENTS REQUIRED IF PIPE HANGER LOADS DO NOT OCCUR AT JOIST BOTTOM CHORD PANEL POINTS.
5. CONTRACTOR SHALL FIELD GALVANIZE ALL SURFACES THAT ARE EXPOSED DUE TO FIELD CUTS/MODIFICATIONS.

PIPE HANGER TRAPEZE DETAIL
NOT TO SCALE
3

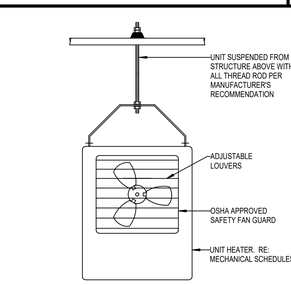

NOTE:
1. UNIT TO BE INSTALLED A MINIMUM OF 7'-0" ABOVE FINISHED FLOOR.
2. DO NOT ROUTE CONDUIT OR WIRING ABOVE UNIT HEATER.
3. REFER TO SPECIFICATION SECTION 15060 FOR HANGERS AND SUPPORTS.
4. REFER TO SPECIFICATION SECTION 15070 FOR VIBRATION CONTROL.
5. PROVIDE WITH WALL MOUNTED THERMOSTAT. REFER TO FLOOR PLANS FOR LOCATION

ELECTRIC UNIT HEATER DETAIL
NOT TO SCALE
2

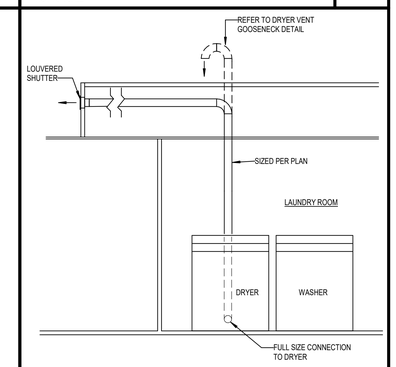

DRYER VENT DETAILS
NOT TO SCALE
1

MECHANICAL DETAILS
M-603
FOR BLUEBEAM LABELING/OCR:

Plot Stamp:
6/6/2025 1:24:48 PM

PBK
www.pbk.com
TX FIRM: BR 1608
HOUSTON, TX
713-365-0608

LEAF ENGINEERS

PKG 3A - GPHS NEW FIELDHOUSE
1000 Keene St.
Galena Park, TX 77547

CLIENT PROJECT NO: 240539
ISSUE FOR PROPOSAL

Galena Park ISD
GP
EXCELLENCE IN ALL POSSIBLE WAYS

KEY PLAN
NORTH: PLAN TRUE

STATE OF TEXAS
MITAL J. PATEL
111622
June 10, 2025
LEAF ENGINEERS
F-16672

CLIENT	
Galena Park ISD	
DATE: June 10, 2025	PROJECT NUMBER: 240539

DRAWING HISTORY

No.	Description	Date

CHECKED BY: MP
DRAWN BY: CT

MECHANICAL DETAILS

M-603

ELECTRICAL SYMBOL LEGEND AND GENERAL NOTES
E-000
FOR BLUEBEAM LABELING/OCR:

0"
1"

GENERAL ELECTRICAL NOTES

1. UNLESS SPECIFICALLY INDICATED ON THE DRAWINGS OR OTHERWISE INSTRUCTED BY THE ARCHITECT, ELECTRICAL OUTLETS SHALL HAVE THE FOLLOWING MOUNTING HEIGHTS. DIMENSIONS ARE TO CENTER OF BOX UNLESS OTHERWISE NOTED:

WALL SWITCHES	*
WALL CONVENIENCE RECEPTACLES	15" AFF TO BOTTOM OF BOX
WALL DATA/VOICE OUTLETS	15" AFF TO BOTTOM OF BOX
WALL OUTLETS FOR WALL MTD. TELEPHONE	*
WALL CLOCK OUTLETS	7'-0" AFF (OR ABOVE CHALKBOARDS WHERE REQUIRED)*
MANUAL FIRE ALARM PULL STATIONS	*
FIRE ALARM SPEAKER/HORN	1'-0" BELOW CEILING, OR IN CEILING, AS REQUIRED*
INTERIOR BELLS,BUZZERS, HORNS	1'-0" BELOW CEILING, OR IN CEILING, AS REQUIRED*
SPECIAL PURPOSE WALL OUTLETS	15" AFF TO BOTTOM OF BOX (OR HIGHER AS REQUIRED TO SERVE EQUIPMENT)
PUSH BUTTONS	
ADA VISUAL ALARM	80" AFF TO BOTTOM OF LENS OR 6" BELOW CEILING, WHICHEVER IS LOWER. ENTIRE LENS TO BE WITHIN 80" TO 96" AFF*

* TOP OF BOX SHALL BE 42" AFF MAX. FOR WHEELCHAIR FRONTAL APPROACH AND 48" AFF MAX. FOR SIDE APPROACH. VERIFY EXACT HEIGHT WITH ARCHITECT

* 7'-0" AFF TO BOTTOM OF DEVICE IF DEVICE PROTRUDES MORE THAN 4" FROM WALL (PER ADA)

AFF = ABOVE FINISHED FLOOR
AFG = ABOVE FINISHED GRADE

2. UNLESS SPECIFICALLY INDICATED ON THE ELECTRICAL DRAWINGS, OUTLETS LOCATED AT COUNTERS AND CABINETS SHALL BE MOUNTED AS SHOWN ON ARCHITECTURAL DETAILS AND ELEVATIONS, OR AS DIRECTED BY ARCHITECT.
3. COORDINATE MOUNTING HEIGHTS AND DETAILS OF ALL OUTLETS (POWER, SIGNAL, ETC.) WITH ARCHITECTURAL CASEWORK DRAWINGS PRIOR TO DIVISION 26 ROUGH-IN. PROVIDE COORDINATION DRAWINGS IN ACCORDANCE WITH DIVISION 26 SPECIFICATIONS WHERE CONFLICTS EXIST. OBTAIN APPROVAL FROM ARCHITECT BEFORE ELECTRICAL ROUGH-IN WHEN CONFLICTS ARISE.
4. REFER TO MECHANICAL DRAWINGS FOR EXACT LOCATION OF ALL HVAC AND PLUMBING EQUIPMENT.
5. CIRCUITING
   A. BRANCH CIRCUITING IS SCHEMATIC IN NATURE AND IS INTENDED TO INDICATE CIRCUIT LOADING AND CONTROL, NOT METHODS OF INSTALLATION. REFER TO SPECIFICATIONS FOR METHODS OF INSTALLATION AND MATERIALS, INCLUDING WHETHER OR NOT BX IS ALLOWED AND WHETHER "THROUGH-FIXTURE" OR "OCTOPUS (EMT WITH FLEXIBLE WHIPS)" TYPE LIGHTING BRANCH CIRCUITING IS REQUIRED.
   B. WHERE WIRE SIZE AND CONDUIT SIZE IS NOT INDICATED ON THE DRAWINGS AND/OR PANEL SCHEDULES, REFER TO SPECIFICATIONS FOR MINIMUM SIZE REQUIRED.
   C. BRANCH CIRCUITS ON THE DRAWINGS ARE GENERALLY NOT SHOWN GROUPED IN SINGLE RACEWAYS. HOWEVER, GROUPING IS ALLOWED UNDER CERTAIN CONDITIONS. REFER TO DIVISION 26 SPECIFICATIONS UNDER SECTION ENTITLED "ELECTRICAL WIRING" FOR REQUIREMENTS.
   D. THE DRAWINGS GENERALLY INDICATE QUANTITY OF CONDUCTORS ON BRANCH CIRCUIT HOME RUNS ONLY. ELSEWHERE WITHIN CIRCUITS, PROVIDE QUANTITY OF CONDUCTORS AS NEEDED TO ACCOMPLISH CIRCUITING AND SWITCHING REQUIREMENTS SHOWN.
6. THE ELECTRICAL CONTRACTOR SHALL COMPLY WITH ALL AUTHORITIES HAVING JURISDICTION, NEC, ALL STATE AND LOCAL CODES AND AMENDMENTS.

ELECTRICAL SYMBOL LEGEND

1. EVERY SYMBOL SHOWN ON LEGEND MAY NOT APPEAR ON DRAWINGS.
2. DASHED ELEECTRICAL EQUIPMENT GENERALLY INDICATES EXISTING EQUIPMENT.
3. LONG-SHORT-SHORT-LONG DASHING GENERALLY INDICATES MATCH LINE OR DEFINES AREA FOR SPECIAL NOTE.

CIRCUIT RELATED:

LIGHTING OR POWER CIRCUIT(S). ARROW INDICATES HOME RUN, LONGER TICK(S) INDICATE NEUTRAL WIRE(S), SHORTER STRAIGHT TICK(S) INDICATE PHASE WIRE(S), SLANTED SHORTER TICK(S) INDICATE SWITCH LEG(S), DOT(S) INDICATE GROUNDING CONDUCTOR(S). DASHED WIRING (LONG-SHORT-LONG DASHES) INDICATES WIRING BELOW SLAB OR GRADE. DASHED WIRING (SERIES OF SHORT DASHES) INDICATES EXISTING WIRING. SLASH THROUGH ARROW INDICATES PARTIAL CIRCUIT. "D" ON HOMERUN ARROW INDICATES DEDICATED CIRCUIT: PROVIDE A SEPARATE NEUTRAL FOR EACH PHASE CONDUCTOR FOR ENTIRE LENGTH OF CIRCUIT FROM PANEL TO OUTLET. COUNT EACH NEUTRAL AS CURRENT-CARRYING AND GROUP A MAXIMUM OF SIX THHN/THWN CONDUCTORS IN A SINGLE RACEWAY; GROUNDING CONDUCTOR IS NOT COUNTED

J — JUNCTION BOX

GROUNDING FIXTURE

LIGHTING:

LED LIGHTING FIXTURE. LETTER INDICATES TYPE, SMALL LETTER INDICATES SWITCH CONTROL, NUMBER INDICATES CIRCUIT. CROSS HATCHING INDICATES FIXTURE ON EMERGENCY SYSTEM. FOR SOLID CIRCLE WITHIN FIXTURE REFERENCE APPROPRIATE CATEGORY "A" CIRCUIT RELATED SYMBOL

STRIP TYPE LED LIGHTING FIXTURE. LETTER INDICATES TYPE, SMALL LETTER INDICATES SWITCH CONTROL, NUMBER INDICATES CIRCUIT, FOR SOLID CIRCLE ATTACHED TO FIXTURE REFERENCE APPROPRIATE CATEGORY "A" CIRCUIT RELATED SYMBOL

LED LIGHTING FIXTURE. LETTER INDICATES TYPE, SMALL LETTER INDICATES SWITCH CONTROL, NUMBER INDICATES CIRCUIT, FOR SOLID CIRCLE REFERENCE APPROPRIATE CATEGORY "A" CIRCUIT RELATED SYMBOL

DESIGNATES FIXTURE ON EMERGENCY POWER. RE: LIGHTING PLAN NOTES AND FIXTURE SCHEDULE NOTES FOR ADDITIONAL INFORMATION

WALL OR BRACKET MOUNTED FIXTURE OR DEVICE

EXIT LIGHT FIXTURE. LETTER INDICATES TYPE, NUMBER INDICATES CIRCUIT, NUMBER AND LOCATION OF SHADED TRIANGLE SECTIONS INDICATE NUMBER OF EXIT SIGN FACES AND DIRECTION OF EACH FACE. PROVIDE CHEVRON DIRECTIONAL INDICATORS AS SHOWN ON DRAWINGS

CONTROL:

^{D} — SWITCH. SMALL LETTER INDICATES FIXTURES CONTROLLED, "P" INDICATES PILOT LIGHT, "WP" INDICATES WEATHERPROOF, "K" INDICATES KEY OPERATED, "MO" INDICATES SPDT MOMENTARY CONTACT, "2" INDICATES DPDT, "3" INDICATES 3-WAY, "4" INDICATES 4-WAY, "M" INDICATES MANUAL MOTOR STARTER, CIRCUIT DESIGNATION NEXT TO SWITCH INDICATES BRANCH CIRCUIT NUMBER

^{DIM,D} — WALL BOX DIMMER SWITCH. "MARK" INDICATES WATTAGE IF OTHER THAN 600, "3D" INDICATES 3-WAY DIMMER

^{OCD} — WALL MOUNT OCCUPANCY SENSOR

LIGHT SWITCH LOCATED ON DIRTT WALL. CONDUIT AND JUNCTION BOX INSTALLED AND PROVIDED BY DIRTT. CONTRACTOR SHALL SUPPLY AND INSTALL LIGHT SWITCH AND ASSOCIATED WIRING IN JUNCTION BOX AND CONDUIT PROVIDED.

$ — SWITCH. SMALL LETTER INDICATES FIXTURES CONTROLLED, "P" INDICATES PILOT LIGHT, "WP" INDICATES WEATHERPROOF, "K" INDICATES KEY OPERATED, "MO" INDICATES SPDT MOMENTARY CONTACT, "2" INDICATES DPDT, "3" INDICATES 3-WAY, "4" INDICATES 4-WAY, "M" INDICATES MANUAL MOTOR STARTER, CIRCUIT DESIGNATION NEXT TO SWITCH INDICATES BRANCH CIRCUIT NUMBER

^{DIM} — WALL BOX DIMMER SWITCH. "MARK" INDICATES WATTAGE IF OTHER THAN 600, "3D" INDICATES 3-WAY DIMMER

$$ — MULTI-LEVEL SWITCH. CIRCUIT DESIGNATION NEXT TO SWITCH INDICATES BRANCH CIRCUIT NUMBER

^{T} — DIGITAL TIME SWITCH

PC — PHOTOELECTRIC CONTROL

EMERGENCY POWER OFF (EPO) PUSHBUTTON

PUSH BUTTON

^{OC} — WALL MOUNT OCCUPANCY SENSOR

DUAL TECHNOLOGY CEILING MOUNTED OCCUPANCY SENSOR

D — CEILING MOUNTED RESTROOM OCCUPANCY SENSOR

D — CEILING MOUNTED CORRIDOR OCCUPANCY SENSOR

HB — CEILING MOUNTED HIGH CEILING OCCUPANCY SENSOR

POWER OUTLETS:

^{D} — 20A-125V DUPLEX RECEPTACLE.

^{D} — 20A-125V GROUND FAULT CIRCUIT INTERRUPTER RECEPTACLE.

^{D} — 20A-125V DUPLEX RECEPTACLE MOUNTED ABOVE COUNTER TOP.

RECEPTACLES UNDER DIRTT SCOPE OF WORK
RECEPTACLES AND ASSOCIATED WIRING IN WALL BY DIRTT
SEE POWER GENERAL NOTE #6 & #7

^{D} — 20A-125V FOURPLEX RECEPTACLE.

20A-125V DUPLEX RECEPTACLE

20A-125V GROUND FAULT CIRCUIT INTERRUPTER RECEPTACLE. "WP" INDICATES WEATHER PROOF DEVICE

20A-125V DUPLEX RECEPTACLE MOUNTED ABOVE COUNTER TOP. REFER TO ARCHITECT FOR EXACT HEIGHT ABOVE COUNTER

$_{C}$ — 20A-125V CONTROLLED DUPLEX RECEPTACLE

20A-125V ISOLATED GROUND TYPE DUPLEX RECEPTACLE

$_{CH}$ — 20A-125V DUPLEX TAMPER RESISTANT RECEPTACLE WITH (2) USB CHARGING PORTS

20A-125V FOURPLEX RECEPTACLE. SAME SYMBOLOGY AS DUPLEX RECEPTACLE

SPECIAL PURPOSE SINGLE POWER RECEPTACLE. RATED AS INDICATED (IF NO RATING INDICATED, RECEPTACLE RATING SHALL MATCH BRANCH CIRCUIT OVERCURRENT PROTECTIVE DEVICE AND SHALL MEET REQUIREMENTS OF EQUIPMENT BEING CONNECTED). "C" INDICATES CLOCK OUTLET

20A-125V FLUSH FLOOR DUPLEX RECEPTACLE. 20A WHEN INDICATED OR IF BRANCH CIRCUIT SERVES ONLY SINGLE DUPLEX. PROVIDE CARPED FLANGE WHERE APPLICABLE

LC1-X — CIRCUIT DESIGNATION NEXT TO RECEPTACLE DEVICES INDICATES BRANCH CIRCUIT NUMBER. RE: PANEL SCHEDULES FOR INFORMATION.

TELEPHONE/DATA:

FLUSH FLOOR TELEPHONE OUTLET WITH CARPET FLANGE WHERE APPLICABLE

WALL COMMUNICATIONS OR DATA OUTLET. REFER TO 'TS' SERIES SHEETS FOR EXACT BOX / CONDUIT REQUIREMENTS

FLUSH FLOOR COMMUNICATIONS OR DATA OUTLET. REFER TO 'TS' SERIES SHEETS FOR EXACT BOX / CONDUIT REQUIREMENTS. PROVIDE CARPET FLANGE WHERE APPLICABLE

SURFACE FLOOR COMMUNICATIONS OR DATA OUTLET. REFER TO 'TS' SERIES SHEETS FOR EXACT BOX / CONDUIT REQUIREMENTS. PROVIDE CARPET FLANGE WHERE APPLICABLE

EQUIPMENT:

+42" — A NOTATION INDICATING THE MOUNTING HEIGHT OF A DEVICE AS MEASURED FROM FINISHED FLOOR OR GRADE TO CENTER LINE OF DEVICE

MOTOR

DISCONNECT SWITCH. FRAME SIZE/FUSE SIZE/POLES AS INDICATED, "NF" INDICATES NON-FUSIBLE. NEMA 1 ENCLOSURE UNLESS OTHERWISE NOTED. PROVIDE FUSED BUSWAY PLUG WHEN SWITCH IS INDICATED ON BUSWAY. ALL DISCONNECT SWITCHES SHALL BE 30/NF/3 UNLESS OTHERWISE NOTED

SINGLE CIRCUIT BREAKER IN INDIVIDUAL ENCLOSURE

MAGNETIC MOTOR CONTROLLER. NUMBER INDICATES NEMA SIZE. STARTER NEMA SIZE SHALL BE "NEMA 1" UNLESS OTHERWISE NOTED

COMBINATION DISCONNECT SWITCH / MOTOR CONTROLLER

CONTACTOR

PANELBOARD

SWITCHBOARD / DP

T — TRANSFORMER

GROUNDING CONNECTION TO GROUNDING ELECTRODE AS DEFINED IN NEC ARTICLE 250

B — BELL. "WP" INDICATED OUTDOOR RATED

PBK
www.pbk.com
TX FIRM: BR 1608
HOUSTON, TX
713-965-0608

LEAF ENGINEERS

PKG 3A - GPHS NEW FIELDHOUSE

1000 Keene St.
Galena Park, TX 77547

CLIENT PROJECT NO: 240539

ISSUE FOR PROPOSAL

Galena Park ISD

KEY PLAN

NORTH: PLAN TRUE

STATE OF TEXAS
DONALD C. RICHARDS
61525
LICENSED
PROFESSIONAL ENGINEER

LEAF ENGINEERS
F-18672

CLIENT	
Galena Park ISD	
DATE: June 10, 2025	PROJECT NUMBER: 240539

DRAWING HISTORY

No.	Description	Date

CHECKED BY: Checker

DRAWN BY: BB

ELECTRICAL SYMBOL LEGEND AND GENERAL NOTES

E-000

Plot Stamp:
6/6/2025 10:17:03 AM

ELECTRICAL DEMO SITE PLAN
EDS-101
FOR BLUEBEAM LABELING/OCR:

1 ELECTRICAL SITE DEMO PLAN
SCALE: 1" = 20'-0"

SITE PLAN GENERAL NOTES:

1. COORDINATE ROUTING FOR ALL UNDERGROUND ELECTRICAL BRANCH CIRCUITS AND FEEDERS WITH OTHER DISCIPLINES PRIOR TO TRENCHING.
2. UNLESS NOTED OTHERWISE ALL UNDERGROUND CONDUIT SHOWN ON THIS PLAN TO BE MINIMUM 1" IN SIZE.
3. CONTRACTOR SHALL BE RESPONSIBLE FOR ANY DAMAGE TO EXISTING UTILITIES CAUSED BY INSTALLATION OF NEW WORK.
4. ALL ITEMS NOTED TO BE REMOVED ARE TO REMAIN THE PROPERTY OF THE OWNER; HOWEVER, CONTRACTOR SHALL REMOVE FROM JOB SITE ALL MATERIAL NOT RETAINED BY OWNER.
5. CONTRACTOR TO REFER TO ARCHITECTURAL DEMOLITION PLANS AND PHASING PLANS AND HAVE A GOOD UNDERSTANDING OF SCOPE OF PROJECT PRIOR TO COMMENCEMENT OF WORK.
6. CONTRACTOR SHALL FIELD VERIFY ANY EXISTING UNDERGROUND PIPING, WIRING, OR OTHER FACILITIES PRIOR TO TRENCHING, AND SHALL BE RESPONSIBLE FOR ANY DAMAGE CAUSED BY INSTALLATION OF NEW WORK.

DEMO SITE PLAN KEYED NOTES:

1. EXISTING BUILDING TO BE DEMOLISHED IN ITS ENTIRETY. CONTRACTOR TO COORDINATE WITH CENTERPOINT FOR SHUTDOWN OF EXISTING ELECTRICAL SERVICE.

PBK
www.pbk.com
TX FIRM: BR 1608
HOUSTON, TX
713-965-0608
LEAF ENGINEERS

PKG 3A - GPHS NEW FIELDHOUSE

1000 Keene St,
Galena Park, TX 77547

CLIENT PROJECT NO: 240539

ISSUE FOR PROPOSAL

KEY PLAN
NORTH: PLAN TRUE

STATE OF TEXAS
DONALD C. RICHARDS
61525
LICENSED
PROFESSIONAL ENGINEER

LEAF ENGINEERS
F-18672

CLIENT	
Galena Park ISD	
DATE	PROJECT NUMBER
June 10, 2025	240539

DRAWING HISTORY

No.	Description	Date

CHECKED BY: Checker
DRAWN BY: BB

ELECTRICAL DEMO SITE PLAN

EDS-101

Plot Stamp:
6/6/2025 10:17:32 AM

ELECTRICAL SITE PLAN
ES-101
FOR BLUEBEAM LABELING/OCR:

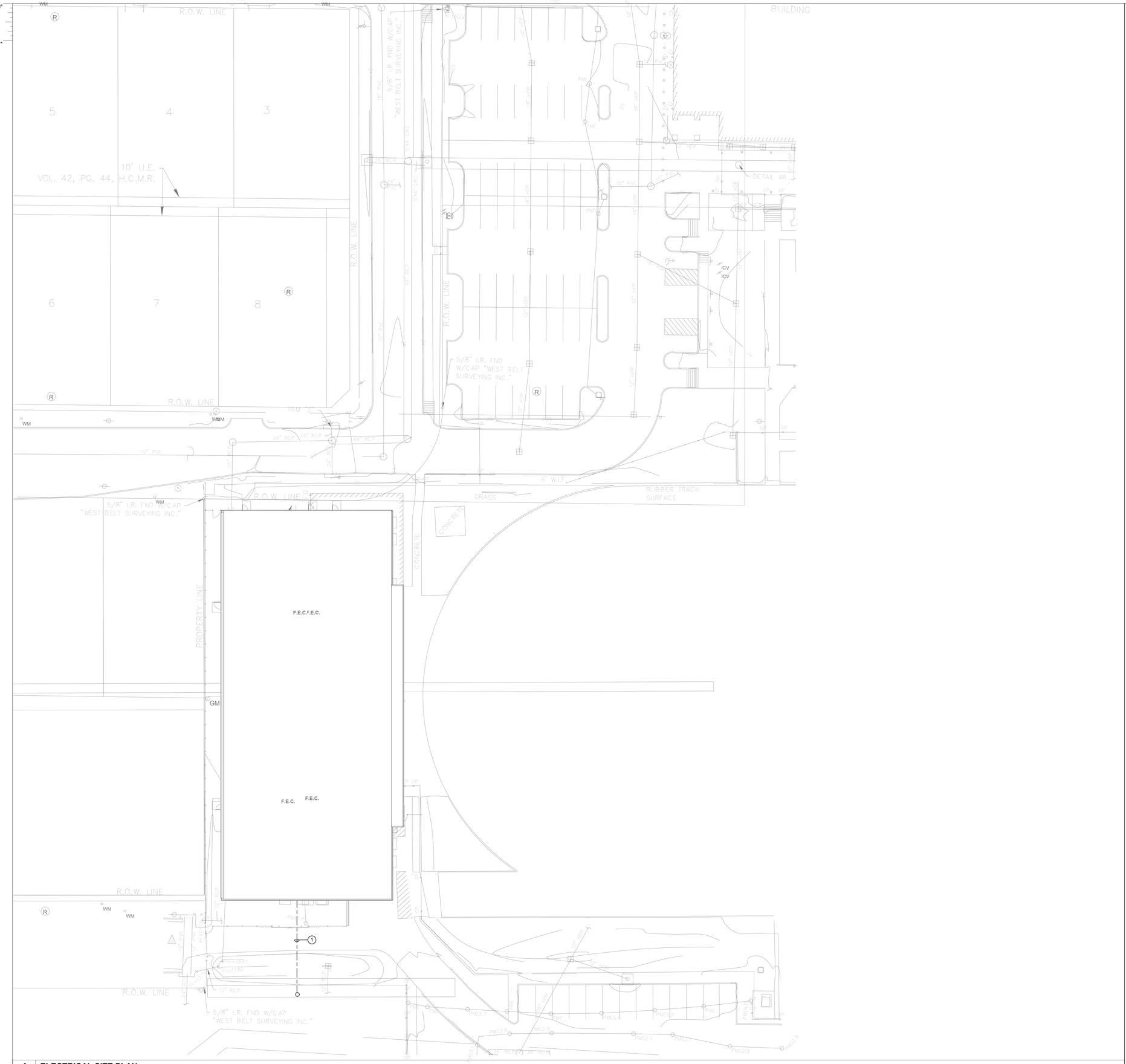

1 ELECTRICAL SITE PLAN
SCALE: 1" = 20'-0"

SITE PLAN GENERAL NOTES:

1. COORDINATE ROUTING FOR ALL UNDERGROUND ELECTRICAL BRANCH CIRCUITS AND FEEDERS WITH OTHER DISCIPLINES PRIOR TO TRENCHING.
2. UNLESS NOTED OTHERWISE ALL UNDERGROUND CONDUIT SHOWN ON THIS PLAN TO BE MINIMUM 1" IN SIZE.
3. CONTRACTOR SHALL BE RESPONSIBLE FOR ANY DAMAGE TO EXISTING UTILITIES CAUSED BY INSTALLATION OF NEW WORK.
4. ALL ITEMS NOTED TO BE REMOVED ARE TO REMAIN THE PROPERTY OF THE OWNER; HOWEVER, CONTRACTOR SHALL REMOVE FROM JOB SITE ALL MATERIAL NOT RETAINED BY OWNER.
5. CONTRACTOR TO REFER TO ARCHITECTURAL DEMOLITION PLANS AND PHASING PLANS AND HAVE A GOOD UNDERSTANDING OF SCOPE OF PROJECT PRIOR TO COMMENCEMENT OF WORK.
6. CONTRACTOR SHALL FIELD VERIFY ANY EXISTING UNDERGROUND PIPING, WIRING, OR OTHER FACILITIES PRIOR TO TRENCHING, AND SHALL BE RESPONSIBLE FOR ANY DAMAGE CAUSED BY INSTALLATION OF NEW WORK.

SITE PLAN KEYED NOTES:

1. APPROXIMATE LOCATION OF INCOMING UTILITY SERVICE.

PBK

www.pbk.com
TX FIRM: BR 1608
HOUSTON, TX
713-965-0608

LEAF ENGINEERS

PKG 3A - GPHS NEW FIELDHOUSE

1000 Keene St,
Galena Park, TX 77547

CLIENT PROJECT NO: 240539

ISSUE FOR PROPOSAL

Galena Park ISD
GP
EXCELLENCE IN ALL FOR ALL IN ALL

KEY PLAN
NORTH: PLAN TRUE

STATE OF TEXAS
DONALD C. RICHARDS
61525
LICENSED
PROFESSIONAL ENGINEER

LEAF ENGINEERS
F-18672

CLIENT	
Galena Park ISD	
DATE	PROJECT NUMBER
June 10, 2025	240539

DRAWING HISTORY

No.	Description	Date

CHECKED BY: Checker
DRAWN BY: BB

ELECTRICAL SITE PLAN

ES-101

Plot Stamp:
6/6/2025 10:17:33 AM

1ST FLOOR POWER PLAN
E-101

FOR BLUEBEAM LABELING/OCR:

0"
1"

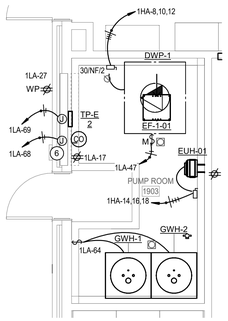

2 **ENLARGED POWER PLAN - PUMP ROOM 1903**
SCALE: 1/4" = 1'-0"

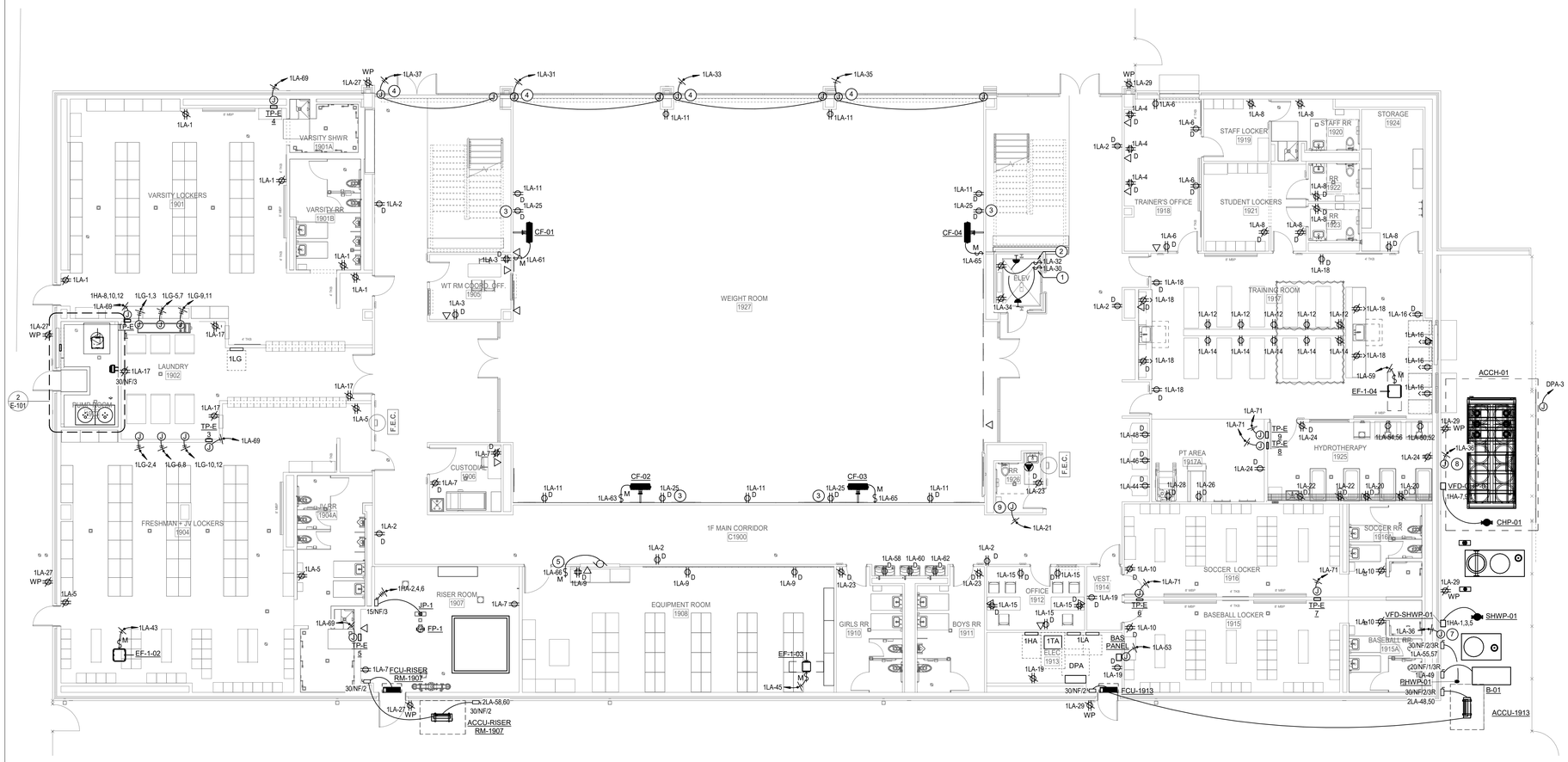

1 **1ST FLOOR POWER PLAN**
SCALE: 1/8" = 1'-0"

POWER PLAN GENERAL NOTES:

1. FOR EQUIPMENT OR DEVICES SHOWN ON ARCHITECTURAL DRAWINGS THAT REQUIRE POWER AND NOT IDENTIFIED ON ELECTRICAL PLANS, ASSUME AT A MINIMUM A DUPELX OUTLET, A DEDICATED CIRCUIT WITH 2#12,1#12G,3/4"C, WITH HOMERUN TO NEAREST 120/208V PANEL. ITEMS SUCH AS BUT NOT LIMITED TO ROLL DOWN DOORS, COUNTER DOORS, OVERHEAD GRILLES, DISPLAY CASES, HAND DRYERS, WATER COOLERS, ICE MAKERS, GARBAGE DISPOSALS, OSCILLATING FANS, LCD's, PROJECTORS, DISHWASHERS, MOTORIZED PROJECTION SCREENS, ETC.
2. DATA/COMMUNICATION OUTLETS ARE SHOWN ON THIS DRAWING FOR COORDINATION PURPOSES ONLY. PROVIDE AND INSTALL ALL CONDUITS AND BACK BOXES REQUIRED BY LOW VOLTAGE SYSTEMS. COORDINATE WITH "TS" DRAWINGS, DETAILS, ETC. AND ARCHITECTURAL DRAWINGS FOR EXACT QUANTITIES, LOCATIONS, AND REQUIREMENTS PRIOR TO ROUGH-IN.
3. CONTRACTOR TO PROVIDE CONNECTION FROM EXHAUST FANS TO ALL MOTORIZED BACKDRAFT DAMPERS AS REQUIRED, COORDINATE WITH MECHANICAL.
4. UNLESS OTHERWISE NOTED, ALL DISCONNECT SHOWN SHALL BE 30/NF/3 DISCONNECT.
5. CONTRACTOR SHALL NOTE THAT ALL 15 AMP AND 20 AMP NON-LOCKING TYPE RECEPTACLES THAT ARE NOT LOCATED WITHIN DEDICATED APPLIANCE SPACE AND ARE BELOW 66" ABOVE FINISHED FLOOR SHALL BE TAMPER RESISTANT TYPE RECEPTACLES. PER NEC 406.12.
6. FOR EACH DIRTT WALL CONTAINING ELECTRICAL DEVICES CONTRACTOR SHALL PROVIDE ONE HARDWIRED CONNECTION LOCATED ABOVE CEILING FOR EACH CIRCUIT LOCATED IN THAT WALL UNLESS OTHERWISE NOTED IN DRAWINGS. CONNECTION LOCATION SHALL BE COORDINATED WITH DIRTT SHOP DRAWINGS.
7. FOR EACH ROOM WITH CONTROLLED RECEPTACLES ONE 20 A POWER PACK COMPATIBLE WITH THE LIGHTING CONTROL SYSTEM SHALL BE PROVIDE FOR EACH CIRCUIT PROVIDING POWER TO CONTROLLED RECEPTACLES. BOTH SWITCHED AND UNSWITCHED POWER FOR THE CIRCUIT SHALL BE PROVIDED WITH A HARDWIRED CONNECTION AT EACH DIRTT WALL. ALL OTHER CONTROLLED RECEPTACLES SHALL BE SPLIT YOLK AND PROVIDED WITH BOTH SWITCHED AND UNSWITCHED POWER. SWITCHED RECEPTACLES SHALL BE CONTROLLED BY THE DIGITAL LIGHTING CONTROL SYSTEM AND SHALL A FOLLOW TIME CLOCK SCHEDULE PROVIDED BY OWNER.

POWER PLAN KEYED NOTES:

1. PROVIDE SWITCH, LIGHT FIXTURES AND RECEPTACLE LOCATED IN ELEVATOR PIT ALL IN NEMA 4 ENCLOSURES. MOUNT (1) LIGHT FIXTURE ADJACENT TO PIT LADDER AS HIGH AS POSSIBLE AND (1) LIGHT FIXTURE ON OPPOSITE WALL AT THE SAME HEIGHT. COORDINATE EXACT LOCATIONS WITH ELEVATOR SUPPLIER PRIOR TO ROUGH-IN.
2. PROVIDE RECEPTACLE AND SWITCH FOR SUMP PUMP IN ELEVATOR PIT ALL IN NEMA 4 ENCLOSURES. COORDINATE LOCATION OF RECEPTACLE AND SWITCH WITH PLUMBING CONTRACTOR PRIOR TO ROUGH-IN.
3. RECEPTACLES FOR TV. FIELD VERIFY WITH TECHNOLOGY FOR FINAL LOCATION AND MOUNTING HEIGHT PRIOR TO INSTALLATION.
4. JUNCTION BOX POWER TO MOTORIZED SHADES. ALL SHADES IN A ROOM SHALL BE CONTROLLED AS A SINGLE UNIT. REFER TO SHADE MANUFACTURER WIRING DIAGRAM FOR EXACT TERMINATION REQUIREMENTS FOR LINE AND CONTROL POWER. REFER TO ARCHITECTURE FOR EXACT LOCATION OF SHADE CONTROLLER.
5. MOTOR SWITCH TO CONTROL OVERHEAD COILING COUNTER DOOR.
6. POWER FOR CARBON MONOXIDE SENSOR. REFER TO MECHANICAL DRAWINGS FOR ADDITIONAL INFORMATION.
7. JUNCTION BOX FOR POWER TO HEAT TRACE COLD WATER PIPING AND MAKE UP WATER LINE. COORDINATE EXACT LOCATION WITH PLUMBING CONTRACTOR. REFER TO HEAT TRACE MANUFACTURER FOR EXACT TERMINATIONS.
8. JUNCTION BOX FOR POWER TO CHILLER EVAPORATOR HEAT TRACE. COORDINATE EXACT LOCATION WITH MECHANICAL CONTRACTOR. REFER TO HEAT TRACE MANUFACTURER FOR EXACT TERMINATIONS.
9. RECEPTACLE PROVIDED WITHIN IN-CEILING BOX WITH 120V POWER FOR A 12V TRANSDUCER FOR OCCUPANCY LIGHTS. REFER TO TECHNOLOGY DRAWINGS FOR ADDITIONAL INFORMATION.

PBK
www.pbk.com
TX FIRM: BR 1608
HOUSTON, TX
713-365-0608

LEAF ENGINEERS

PKG 3A - GPHS NEW FIELDHOUSE

1000 Keene St.
Galena Park, TX 77547

CLIENT PROJECT NO: 240539

ISSUE FOR PROPOSAL

Galena Park ISD

KEY PLAN
NORTH: PLAN TRUE

STATE OF TEXAS
DONALD C. RICHARDS
61525
PROFESSIONAL ENGINEER

LEAF ENGINEERS
F-18672

CLIENT	
Galena Park ISD	
DATE June 10, 2025	PROJECT NUMBER 240539

DRAWING HISTORY

No.	Description	Date

CHECKED BY: Checker
DRAWN BY: BB

1ST FLOOR POWER PLAN

E-101

Plot Stamp:
6/6/2025 10:17:19 AM

2ND FLOOR POWER PLAN
E-102

FOR BLUEBEAM LABELING/OCR:

0"
1"

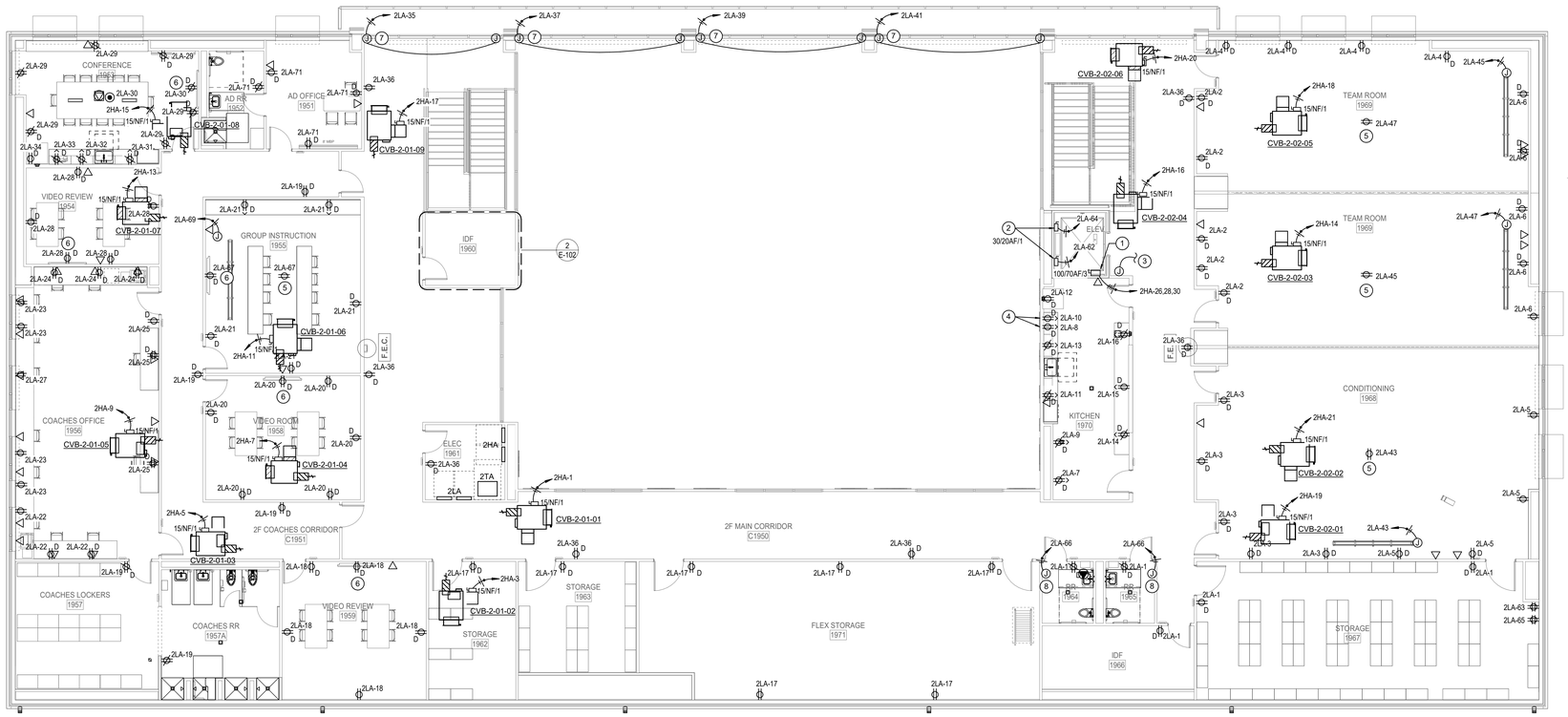

1 **2ND FLOOR POWER PLAN**
SCALE: 1/8" = 1'-0"

POWER PLAN GENERAL NOTES:

1. FOR EQUIPMENT OR DEVICES SHOWN ON ARCHITECTURAL DRAWINGS THAT REQUIRE POWER AND NOT IDENTIFIED ON ELECTRICAL PLANS, ASSUME AT A MINIMUM A DUPELX OUTLET, A DEDICATED CIRCUIT WITH 2#12,1#12G,3/4"C. WITH HOMERUN TO NEAREST 120/208V PANEL. ITEMS SUCH AS BUT NOT LIMITED TO ROLL DOWN DOORS, COUNTER DOORS, OVERHEAD GRILLES, DISPLAY CASES, HAND DRYERS, WATER COOLERS, ICE MAKERS, GARBAGE DISPOSALS, OSCILLATING FANS, LCD's, PROJECTORS, DISHWASHERS, MOTORIZED PROJECTION SCREENS, ETC.
2. DATA/COMMUNICATION OUTLETS ARE SHOWN ON THIS DRAWING FOR COORDINATION PURPOSES ONLY. PROVIDE AND INSTALL ALL CONDUITS AND BACK BOXES REQUIRED BY LOW VOLTAGE SYSTEMS. COORDINATE WITH "TS" DRAWINGS, DETAILS, ETC. AND ARCHITECTURAL DRAWINGS FOR EXACT QUANTITIES, LOCATIONS, AND REQUIREMENTS PRIOR TO ROUGH-IN.
3. CONTRACTOR TO PROVIDE CONNECTION FROM EXHAUST FANS TO ALL MOTORIZED BACKDRAFT DAMPERS AS REQUIRED, COORDINATE WITH MECHANICAL.
4. UNLESS OTHERWISE NOTED, ALL DISCONNECT SHOWN SHALL BE 30/NF/3 DISCONNECT.
5. CONTRACTOR SHALL NOTE THAT ALL 15 AMP AND 20 AMP NON-LOCKING TYPE RECEPTACLES THAT ARE NOT LOCATED WITHIN DEDICATED APPLIANCE SPACE AND ARE BELOW 66" ABOVE FINISHED FLOOR SHALL BE TAMPER RESISTANT TYPE RECEPTACLES. PER NEC 406.12.
6. FOR EACH DIRTT WALL CONTAINING ELECTRICAL DEVICES CONTRACTOR SHALL PROVIDE ONE HARDWIRED CONNECTION LOCATED ABOVE CEILING FOR EACH CIRCUIT LOCATED IN THAT WALL UNLESS OTHERWISE NOTED IN DRAWINGS. CONNECTION LOCATION SHALL BE COORDINATED WITH DIRTT SHOP DRAWINGS.
7. FOR EACH ROOM WITH CONTROLLED RECEPTACLES ONE 20 A POWER PACK COMPATIBLE WITH THE LIGHTING CONTROL SYSTEM SHALL BE PROVIDE FOR EACH CIRCUIT PROVIDING POWER TO CONTROLLED RECEPTACLES. BOTH SWITCHED AND UNSWITCHED POWER FOR THE CIRCUIT SHALL BE PROVIDED WITH A HARDWIRED CONNECTION AT EACH DIRTT WALL. ALL OTHER CONTROLLED RECEPTACLES SHALL BE SPLIT YOLK AND PROVIDED WITH BOTH SWITCHED AND UNSWITCHED POWER. SWITCHED RECEPTACLES SHALL BE CONTROLLED BY THE DIGITAL LIGHTING CONTROL SYSTEM AND SHALL A FOLLOW TIME CLOCK SCHEDULE PROVIDED BY OWNER.

POWER PLAN KEYED NOTES:

1. ELEVATOR AUTOMATIC SHUTDOWN SWITCH. PROVIDE PER SPECIFICATION 26 09 14. MAKE ALL CONNECTIONS TO ELEVATOR CONTROLLER AS REQUIRED BY ELEV. MFR. VERIFY ELEV. EQUIPMENT LOCATIONS WITH ELEV. SUPPLIER BEFORE ELECT. ROUGH-IN. COORDINATE FUSE SIZE, DISCONNECT SWITCH SIZE, CIRCUIT BREAKER SIZE, CONDUCTOR SIZE AND CONDUIT SIZE FOR ELEVATOR WITH ELEVATOR SUPPLIER AND PER SUPPLIER'S RECOMMENDATION(S) PRIOR TO SUBMITTING ELECTRICAL EQUIPMENT. CONNECTION FROM DISCONNECT SWITCH TO ELEVATOR CONTROLLER BY DIVISION 26. COORDINATE LOCATION OF CONTROLLER WITH ELEVATOR INSTALLER IN FIELD.
2. PROVIDE DISCONNECT SWITCHES FOR ELEVATOR CAB LIGHT(S) AND CONTROLLER. COORDINATE CLEARANCE AROUND DISCONNECT SWITCH PER NEC. 620-72 WITH ELEVATOR INSTALLER. ELECTRICAL CONNECTION FROM SWITCH TO ELEVATOR CAB BY ELEVATOR INSTALLER. INSTALL LOCAL DISCONNECT WITH PADLOCK ACCESSORY FOR HANDLE PER NEC 620-53.
3. PROVIDE 1" EMPTY CONDUIT WITH PULL STRING FROM PULL BOX TO TELEPHONE TERMINAL BOARD. TERMINATE CONDUIT 12" AWAY FROM TERMINAL BOARD AND CAP. COORDINATE CONDUIT ROUTING WITH OTHER DISCIPLINE(S) LOCATED ABOVE CEILING.
4. RECEPTACLES FOR MICROWAVE. COORDINATE RECEPTACLE HEIGHT WITH CASEWORK DRAWINGS PRIOR TO INSTALLATION.
5. CEILING MOUNTED RECEPTACLE FOR PROJECTOR. COORDINATE RECEPTACLE MOUNTING AND LOCATION WITH TECHNOLOGY PRIOR TO INSTALLATION.
6. RECEPTACLES FOR TV. FIELD VERIFY WITH TECHNOLOGY FOR FINAL LOCATION AND MOUNTING HEIGHT PRIOR TO INSTALLATION.
7. JUNCTION BOX POWER TO MOTORIZED SHADES. ALL SHADES IN A ROOM SHALL BE CONTROLLED AS A SINGLE UNIT. REFER TO SHADE MANUFACTURER WIRING DIAGRAM FOR EXACT TERMINATION REQUIREMENTS FOR LINE AND CONTROL POWER. REFER TO SHADE MANUFACTURER WIRING DIAGRAM FOR EXACT TERMINATION REQUIREMENTS. REFER TO ARCHITECTURE FOR EXACT LOCATION OF SHADE CONTROLLER.
8. RECEPTACLE PROVIDED WITHIN IN-CEILING BOX WITH 120V POWER FOR A 12V TRANSDUCER FOR OCCUPANCY LIGHTS. REFER TO TECHNOLOGY DRAWINGS FOR ADDITIONAL INFORMATION.

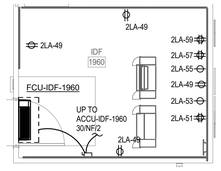

2 **2ND FLOOR POWER PLAN - IDF 1929**
SCALE: 1/4" = 1'-0"

PBK
www.pbk.com
TX FIRM: BR 1608
HOUSTON, TX
713-365-0608

LEAF ENGINEERS

PKG 3A - GPHS NEW FIELDHOUSE

1000 Keene St.
Galena Park, TX 77547

CLIENT PROJECT NO: 240539

ISSUE FOR PROPOSAL

Galena Park ISD
EXCELLENCE IN ALL FOR ALL OF US

KEY PLAN
NORTH: PLAN TRUE

STATE OF TEXAS
DONALD C. RICHARDS
61525
PROFESSIONAL ENGINEER

LEAF ENGINEERS
F-18672

CLIENT	
Galena Park ISD	
DATE: June 10, 2025	PROJECT NUMBER: 240539

DRAWING HISTORY

No.	Description	Date

CHECKED BY: Checker
DRAWN BY: BB

2ND FLOOR POWER PLAN

E-102

Plot Stamp:
6/6/2025 10:17:22 AM

1ST FLOOR LIGHTING PLAN
E-201

FOR BLUEBEAM LABELING/OCR:

0"
1"

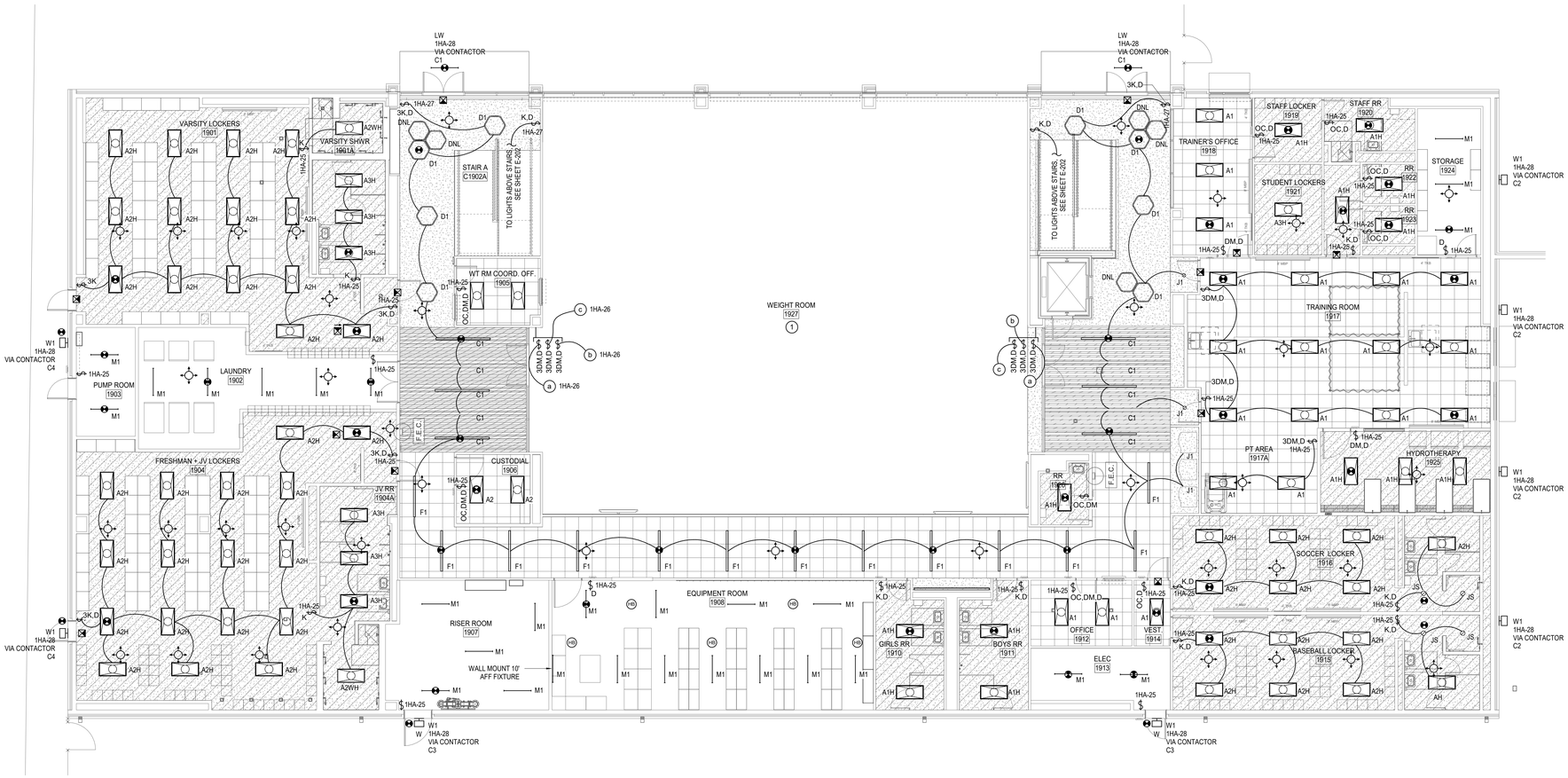

1 **1ST FLOOR LIGHTING PLAN**
SCALE: 1/8" = 1'-0"

LIGHTING PLAN GENERAL NOTES

1. REFER TO ARCHITECT'S REFLECTED CEILING PLAN FOR EXACT LOCATIONS OF ALL LIGHTING FIXTURES.
2. UNLESS OTHERWISE NOTED, ALL 2X4'S ARE TYPE "A", ALL EXIT SIGNS ARE TYPE "X".
3. PROVIDE A COMPLETE AND OPERATIONAL SYSTEM OF OCCUPANCY SENSORS FOR ON/OFF CONTROL OF ALL LIGHT FIXTURES INCLUDING BUT NOT LIMITED TO POWER PACKS, WIRING, ETC. RE: DIVISION 26 SPECIFICATIONS FOR ADDITIONAL INFORMATION.
4. PROVIDE EMERGENCY BATTERY PACKS FOR ALL LIGHTING FIXTURES DESIGNATED TO BE ON EMERGENCY POWER AND EXIT SIGNS. PROVIDE UNSWITCHED HOT TO BATTERY SO THAT LIGHT FIXTURES CAN BE SWITCHED OFF AND ON WITHOUT DRAINING BATTERY. RE: DIVISION 26 SPECIFICATIONS FOR ADDITIONAL INFORMATION. PROVIDE 20A UNSWITCHED BRANCH CIRCUIT (2#12, 1#12G, 3/4"C) FROM LIGHTING PANEL TO ALL EXIT SIGNS IN THIS AREA.

LIGHTING PLAN KEYED NOTES:

1. LOWER CASE LETTERING INDICATES SWITCHING GROUP. LIGHTING FIXTURES SHOWN ON SHEET E-202 CONNECTED TO BE CONTROLLED BY SWITCH.

PBK
www.pbk.com
TX FIRM: BR 1608
HOUSTON, TX
713-365-0608

LEAF ENGINEERS

PKG 3A - GPHS NEW FIELDHOUSE

1000 Keene St,
Galena Park, TX 77547

CLIENT PROJECT NO: 240539

ISSUE FOR PROPOSAL

Galena Park ISD

KEY PLAN
NORTH: PLAN TRUE

STATE OF TEXAS
DONALD C. RICHARDS
61525
PROFESSIONAL ENGINEER

LEAF ENGINEERS
F-18672

CLIENT	
Galena Park ISD	
DATE: June 10, 2025	PROJECT NUMBER: 240539

DRAWING HISTORY

No.	Description	Date

CHECKED BY: Checker
DRAWN BY: BB

1ST FLOOR LIGHTING PLAN

E-201

Plot Stamp:
6/6/2025 10:17:25 AM

2ND FLOOR LIGHTING PLAN
E-202
FOR BLUEBEAM LABELING/OCR:

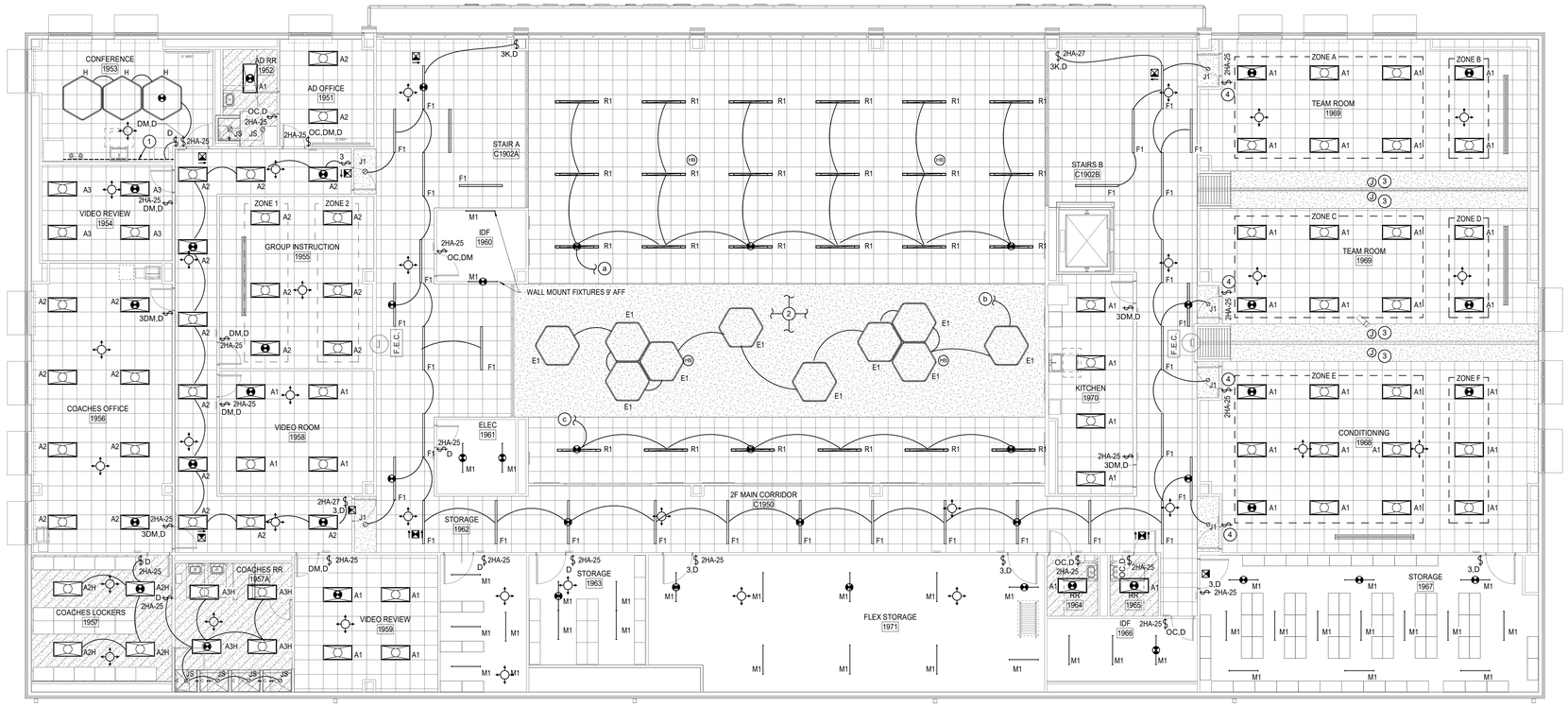

1 2ND FLOOR LIGHTING PLAN
SCALE: 1/8" = 1'-0"

LIGHTING PLAN GENERAL NOTES

1. REFER TO ARCHITECT'S REFLECTED CEILING PLAN FOR EXACT LOCATIONS OF ALL LIGHTING FIXTURES.
2. UNLESS OTHERWISE NOTED, ALL 2X4'S ARE TYPE "A", ALL EXIT SIGNS ARE TYPE "X".
3. PROVIDE A COMPLETE AND OPERATIONAL SYSTEM OF OCCUPANCY SENSORS FOR ON/OFF CONTROL OF ALL LIGHT FIXTURES INCLUDING BUT NOT LIMITED TO POWER PACKS, WIRING, ETC. RE: DIVISION 26 SPECIFICATIONS FOR ADDITIONAL INFORMATION.
4. PROVIDE EMERGENCY BATTERY PACKS FOR ALL LIGHTING FIXTURES DESIGNATED TO BE ON EMERGENCY POWER AND EXIT SIGNS. PROVIDE UNSWITCHED HOT TO BATTERY SO THAT LIGHT FIXTURES CAN BE SWITCHED OFF AND ON WITHOUT DRAINING BATTERY. RE: DIVISION 26 SPECIFICATIONS FOR ADDITIONAL INFORMATION. PROVIDE 20A UNSWITCHED BRANCH CIRCUIT (2#12, 1#12G, 3/4"C) FROM LIGHTING PANEL TO ALL EXIT SIGNS IN THIS AREA.

LIGHTING PLAN KEYED NOTES:

1. UNDER COUNTER LIGHT FIXTURE, CONDUIT, JUNCTION BOX AND ASSOCIATED WIRING INSTALLED AND PROVIDED BY DIRTT. CONTRACTOR SHALL SUPPLY CONNECTION TO WALL SWITCH SHOWN ON FLOOR PLAN.
2. LOWER CASE LETTERING INDICATES SWITCHING GROUP. CONNECTED LIGHTING SWITCHES SHOWN ON SHEET E-201.
3. PROVIDE INFRARED PARTITION SENSOR WHEN FOLDING PARTITION IS FOLDED OUT (ROOMS SEPARATED), TOUCHES SWITCH UPDATES TO SHOW ONLY LIGHTING ZONES IN PARTITIONED SPACE. WHEN FOLDING PARTITION IS FOLDED OUT (ROOMS COMBINED), TOUCH SCREEN SWITCH UPDATES TO SHOW LIGHTING ZONES IN COMBINED SPACES. COORDINATE EXACT LOCATION OF PARTITION SENSORS WITH LIGHTING CONTRACTOR PRIOR TO ROUGH-IN. PROVIDE ALL CONDUIT AND WIRING FOR A COMPLETE AND OPERATIONAL SYSTEM.
4. PROVIDE NLIGHT TOUCH SWITCH, OR ENGINEER APPROVED EQUAL, FOR CONTROL OF SPACE(S) BASED ON OPERATING PARTITION WALLS VIA PARTITION SENSOR. LIGHT SWITCH LOCATED ON DIRTT WALL. CONDUIT AND JUNCTION BOX INSTALLED AND PROVIDED BY DIRTT. CONTRACTOR SHALL SUPPLY AND INSTALL LIGHT SWITCH AND ASSOCIATED WIRING IN JUNCTION BOX AND CONDUIT PROVIDED.

PBK

www.pbk.com
TX FIRM: BR 1608
HOUSTON, TX
713-965-0608

LEAF ENGINEERS

PKG 3A - GPHS NEW FIELDHOUSE

1000 Keene St,
Galena Park, TX 77547

CLIENT PROJECT NO: 240539

ISSUE FOR PROPOSAL

Galena Park ISD
GP
EXCELLENCE IN ALL FOR ALL IN ALL

KEY PLAN
NORTH: PLAN TRUE

STATE OF TEXAS
DONALD C. RICHARDS
61525
LICENSED
PROFESSIONAL ENGINEER

LEAF ENGINEERS
F-18672

CLIENT	
Galena Park ISD	
DATE	PROJECT NUMBER
June 10, 2025	240539

DRAWING HISTORY

No.	Description	Date

CHECKED BY: Checker
DRAWN BY: BB

2ND FLOOR LIGHTING PLAN

E-202

Plot Stamp:
6/10/2025 8:53:12 AM

ELECTRICAL ROOF PLAN
E-301
FOR BLUEBEAM LABELING/OCR:

0"
1"

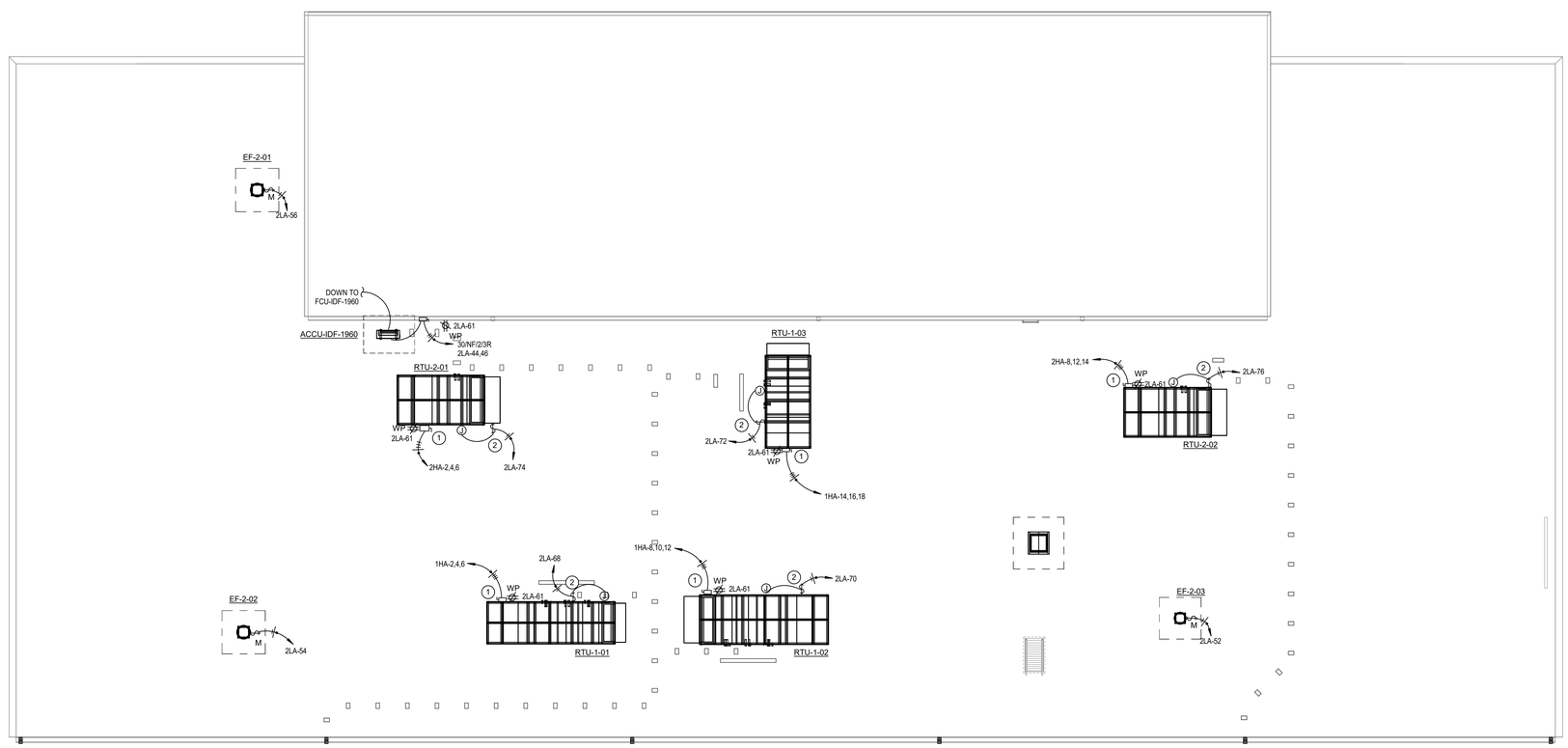

1 **ELECTRICAL ROOF PLAN**
SCALE: 1/8" = 1'-0"

POWER PLAN GENERAL NOTES:

1. FOR EQUIPMENT OR DEVICES SHOWN ON ARCHITECTURAL DRAWINGS THAT REQUIRE POWER AND NOT IDENTIFIED ON ELECTRICAL PLANS, ASSUME AT A MINIMUM A DUPELX OUTLET, A DEDICATED CIRCUIT WITH 2#12,1#12G,3/4"C, WITH HOMERUN TO NEAREST 120/208V PANEL. ITEMS SUCH AS BUT NOT LIMITED TO ROLL DOWN DOORS, COUNTER DOORS, OVERHEAD GRILLES, DISPLAY CASES, HAND DRYERS, WATER COOLERS, ICE MAKERS, GARBAGE DISPOSALS, OSCILLATING FANS, LCD's, PROJECTORS, DISHWASHERS, MOTORIZED PROJECTION SCREENS, ETC.
2. DATA/COMMUNICATION OUTLETS ARE SHOWN ON THIS DRAWING FOR COORDINATION PURPOSES ONLY. PROVIDE AND INSTALL ALL CONDUITS AND BACK BOXES REQUIRED BY LOW VOLTAGE SYSTEMS. COORDINATE WITH TS' DRAWINGS, DETAILS, ETC. AND ARCHITECTURAL DRAWINGS FOR EXACT QUANTITIES, LOCATIONS, AND REQUIREMENTS PRIOR TO ROUGH-IN.
3. CONTRACTOR TO PROVIDE CONNECTION FROM EXHAUST FANS TO ALL MOTORIZED BACKDRAFT DAMPERS AS REQUIRED, COORDINATE WITH MECHANICAL.
4. UNLESS OTHERWISE NOTED, ALL DISCONNECT SHOWN SHALL BE 30/NF/3 DISCONNECT.
5. CONTRACTOR SHALL NOTE THAT ALL 15 AMP AND 20 AMP NON-LOCKING TYPE RECEPTACLES THAT ARE NOT LOCATED WITHIN DEDICATED APPLIANCE SPACE AND ARE BELOW 66" ABOVE FINISHED FLOOR SHALL BE TAMPER RESISTANT TYPE RECEPTACLES. PER NEC 406.12.
6. FOR EACH DIRTT WALL CONTAINING ELECTRICAL DEVICES CONTRACTOR SHALL PROVIDE ONE HARDWIRED CONNECTION LOCATED ABOVE CEILING FOR EACH CIRCUIT LOCATED IN THAT WALL UNLESS OTHERWISE NOTED IN DRAWINGS. CONNECTION LOCATION SHALL BE COORDINATED WITH DIRTT SHOP DRAWINGS.
7. FOR EACH ROOM WITH CONTROLLED RECEPTACLES ONE 20 A POWER PACK COMPATIBLE WITH THE LIGHTING CONTROL SYSTEM SHALL BE PROVIDE FOR EACH CIRCUIT PROVIDING POWER TO CONTROLLED RECEPTACLES. BOTH SWITCHED AND UNSWITCHED POWER FOR THE CIRCUIT SHALL BE PROVIDED WITH A HARDWIRED CONNECTION AT EACH DIRTT WALL. ALL OTHER CONTROLLED RECEPTACLES SHALL BE SPLIT YOLK AND PROVIDED WITH BOTH SWITCHED AND UNSWITCHED POWER. SWITCHED RECEPTACLES SHALL BE CONTROLLED BY THE DIGITAL LIGHTING CONTROL SYSTEM AND SHALL A FOLLOW TIME CLOCK SCHEDULE PROVIDED BY OWNER.

POWER PLAN KEYED NOTES:

1. EQUIPMENT STARTER DISCONNECT AND WEATHERPROOF RECEPTACLE ARE TO BE PROVIDED WITH THE UNIT. REFER TO MECHANICAL DRAWINGS FOR ADDITIONAL INFORMATION. CONTRACTOR SHALL NOTE THAT THE WEATHERPROOF RECEPTACLE SHALL NOT BE POWERED FROM THE UNIT POWER.
2. UVC LIGHT. ACCESS DOOR KILL SWITCH BY MECHANICAL. CONTRACTOR SHALL FIELD VERIFY MANUFACTURER ELECTRICAL REQUIREMENTS.

PBK
www.pbk.com
TX FIRM: BR 1608
HOUSTON, TX
713-365-0608

LEAF ENGINEERS

PKG 3A - GPHS NEW FIELDHOUSE

1000 Keene St.
Galena Park, TX 77547

CLIENT PROJECT NO: 240539

ISSUE FOR PROPOSAL

Galena Park ISD

KEY PLAN
NORTH: PLAN TRUE

STATE OF TEXAS
DONALD C. RICHARDS
61525
LICENSED
PROFESSIONAL ENGINEER

LEAF ENGINEERS
F-18672

CLIENT	
Galena Park ISD	
DATE: June 10, 2025	PROJECT NUMBER: 240539

DRAWING HISTORY

No.	Description	Date

CHECKED BY: Checker
DRAWN BY: BB

ELECTRICAL ROOF PLAN

E-301

Plot Stamp:
6/6/2025 11:02:09 AM

ELECTRICAL ONE-LINE DIAGRAM
E-501

FOR BLUEBEAM LABELING/OCR:

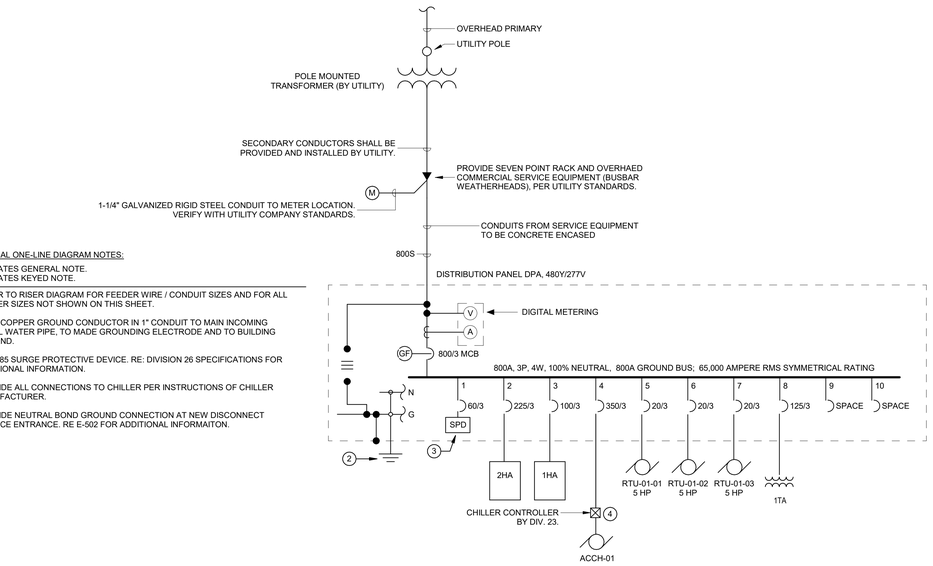

ELECTRICAL ONE-LINE DIAGRAM NOTES:

#. INDICATES GENERAL NOTE.
Ⓚ INDICATES KEYED NOTE.

1. REFER TO RISER DIAGRAM FOR FEEDER WIRE / CONDUIT SIZES AND FOR ALL FEEDER SIZES NOT SHOWN ON THIS SHEET.
2. 1 #3/0 COPPER GROUND CONDUCTOR IN 1" CONDUIT TO MAIN INCOMING METAL WATER PIPE, TO MADE GROUNDING ELECTRODE AND TO BUILDING GROUND.
3. NEC 285 SURGE PROTECTIVE DEVICE. RE: DIVISION 26 SPECIFICATIONS FOR ADDITIONAL INFORMATION.
4. PROVIDE ALL CONNECTIONS TO CHILLER PER INSTRUCTIONS OF CHILLER MANUFACTURER.
5. PROVIDE NEUTRAL BOND GROUND CONNECTION AT NEW DISCONNECT SERVICE ENTRANCE. RE E-502 FOR ADDITIONAL INFORMAITON.

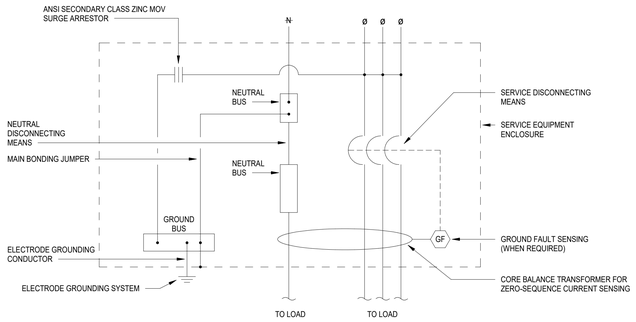

2 ELECTRIC SERVICE GROUNDING DETAIL
NOT TO SCALE

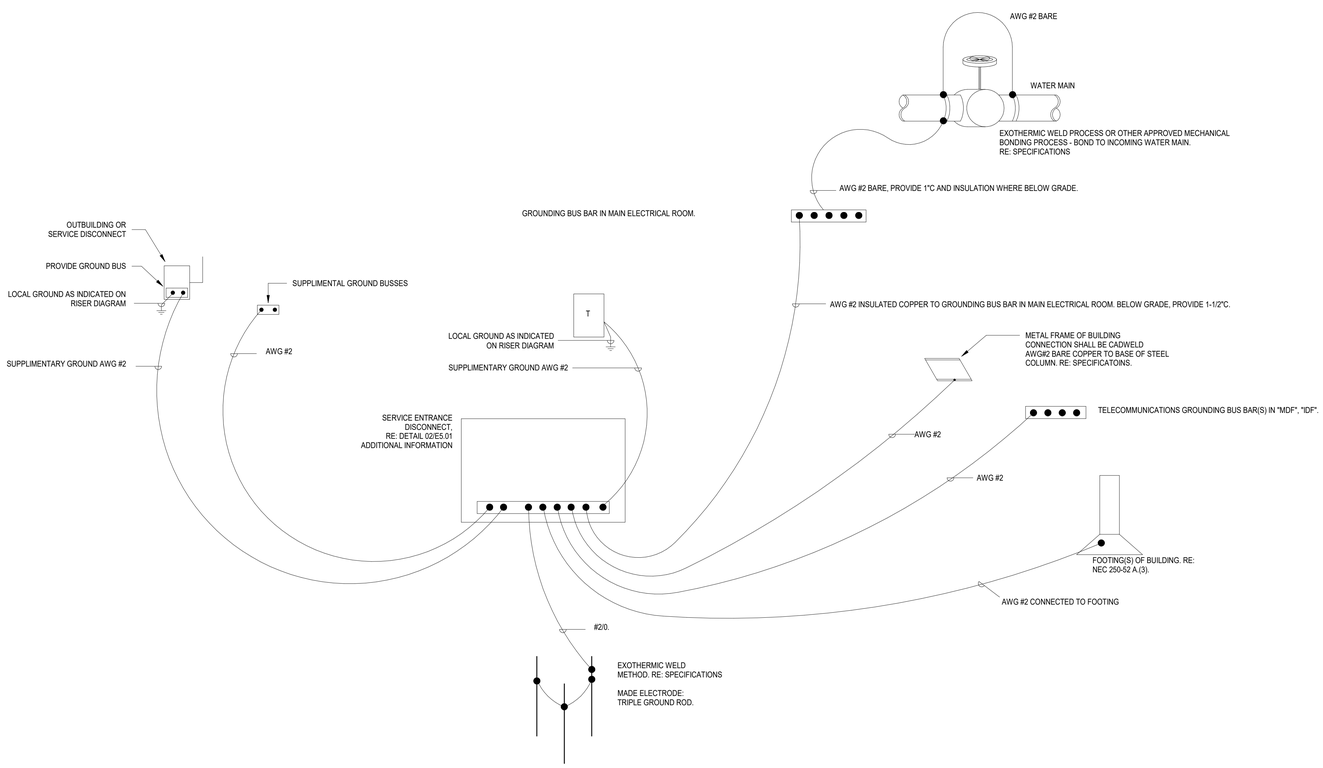

3 ELECTRICAL GROUNDING REQUIREMENTS
NOT TO SCALE

PBK
www.pbk.com
TX FIRM: BR 1608
HOUSTON, TX
713-365-0608

LEAF ENGINEERS

PKG 3A - GPHS NEW FIELDHOUSE
1000 Keene St.
Galena Park, TX 77547

CLIENT PROJECT NO: 240539
ISSUE FOR PROPOSAL

KEY PLAN
NORTH: PLAN TRUE

STATE OF TEXAS
DONALD C. RICHARDS
61525
LICENSED
PROFESSIONAL ENGINEER

LEAF ENGINEERS
F-18672

CLIENT	
Galena Park ISD	
DATE: June 10, 2025	PROJECT NUMBER: 240539

DRAWING HISTORY

No.	Description	Date

CHECKED BY: Checker
DRAWN BY: BB

ELECTRICAL ONE-LINE DIAGRAM

E-501

Plot Stamp:
6/6/2025 10:17:28 AM

ELECTRICAL RISER DIAGRAM
E-502
FOR BLUEBEAM LABELING/OCR:

0"
1"

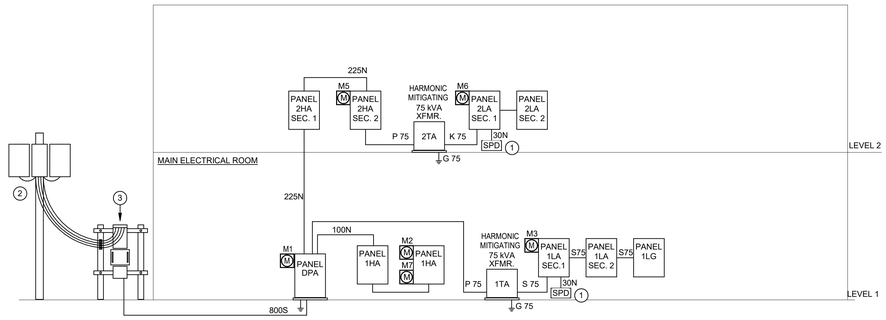

METER SCHEDULE	
CATEGORY	CATEGORY LOAD CALCULATION (ADD OR REMOVE METER LOADS AS SHOWN)
HVAC	M1-M2-M5-M3
INTERIOR LIGHTING	M2+M5-M7-M6
EXTERIOR LIGHTING	M7
PLUG LOADS	M3 + M6
PROCESS LOAD	NA
BUILDING OPERATION	NA

A DATA ACQUISITION SYSTEM FOR ELECTRICAL METERS SHALL BE PROVIDED THE MEETS THE FOLLOWING REQUIREMENTS.

1) THE SYSTEM SHALL HAVE THE CAPABILITY TO STORE REAL-TIME ENERGY CONSUMPTION AND PROVIDE HOURLY, DAILY, MONTHLY, AND YEARLY LOGGED DATA FOR EACH END-USE CATEGORY FOR A MINIMUM OF 36 MONTHS.

2) A PERMANENT AND READILY ACCESSIBLE REPORTING MECHANISM SHALL BE PROVIDED IN THE BUILDING THAT IS ACCESSIBLE BY THE BUILDING OPERATION AND MANAGEMENT PERSONNEL. THE REPORTING MECHANISM SHALL HAVE THE CAPABILITY TO GRAPHICALLY PROVIDE THE ENERGY CONSUMPTION.

3)CURRENT SENSORS SHALL BE PERMITTED, PROVIDED THAT THEY HAVE A TESTED ACCURACY OF +-2 PERCENT

ELECTRICAL ONE-LINE DIAGRAM NOTES:

#. INDICATES GENERAL NOTE.
Ⓔ INDICATES KEYED NOTE.

1. UNLESS NOTED OTHERWISE, ALL TRANSFORMERS TO BE 480: 208/120 VOLT 3P, 4W.
2. PROVIDE THRU-FEED LUGS FOR ALL MULTI-SECTION PANELBOARDS.

(1) SURGE PROTECTIVE DEVICE, RE: DIVISION 26 SPECIFICATIONS FOR ADDITIONAL INFORMATION.

(2) POLE MOUNT TRANSFORMER BANK BY CENTERPOINT ENERGY.

(3) NEW 800 AMP BUSSED WEATHERHEAD, LOCATION AS SHOWN ON SITE PLAN. CONTRACTOR SHALL CONTACT CENTERPOINT ENERGY AND ARRANGE FOR NEW SERVICE CONDUCTOR INSTALLATION AND NEW TRANSFORMER BANK TO NEW BUSSED WEATHERHEAD.

FEEDER SCHEDULE

TAG NUMBER	CONDUCTOR QUANTITY AND SIZE	CONDUIT SIZE	SETS	COMMENTS
30N	4#10, 1#10G	1"	1	
50N	4#6, 1#10G	1"	1	
60N	4#6, 1#10G	1"	1	
100	3#1, 1#8G	1 1/2"	1	
100N	4#1, 1#8G	1 1/2"	1	
125	3#1, 1#6G	1 1/2"	1	
125N	4#1, 1#6G	2"	1	
150	3#1/0, 1#6G	1 1/2"	1	
150N	4#1/0, 1#6G	2"	1	
175	3#2/0, 1#6G	2"	1	
175N	4#2/0, 1#6G	2"	1	
200	3#3/0, 1#6G	2"	1	
200N	4#3/0, 1#6G	2"	1	
225	3#4/0, 1#4G	2"	1	
225N	4#4/0, 1#4G	2 1/2"	1	
250	3#250, 1#4G	2 1/2"	1	
250N	4#250, 1#4G	3"	1	
300	3#350, 1#4G	3"	1	
300N	4#350, 1#4G	3"	1	
400	3#3/0, 1#3G	2"	2	
400N	4#3/0, 1#3G	2"	2	
400S	4#500	3 1/2"	1	
600	3#350, 1#1G	3"	2	
600N	4#350, 1#1G	3"	2	
600S	4#350	3"	2	
800	3#500, 1#1/0G	3"	2	
800N	4#500, 1#1/0G	3 1/2"	2	
800S	4#500	3 1/2"	2	
1000	3#400, 1#2/0G	3"	3	
1000N	4#400, 1#2/0G	3"	3	
1000S	4#400	3"	3	
1200	3#350, 1#3/0G	3"	4	
1200N	4#350, 1#3/0G	3"	4	
1200S	4#350	3"	4	
1600S	4#400	3"	5	
2000S	4#400	3"	6	
2500S	4#500	3 1/2"	7	
3000S	4#500	3 1/2"	8	
4000S	4#500	3 1/2"	11	

TRANSFORMER FEEDER SCHEDULE

TAG NUMBER	CONDUCTOR QUANTITY AND SIZE	CONDUIT SIZE	SETS	COMMENTS
P15	3#10, 1#10G	3/4"	1	
S15	4#6, 1#8G	1"	1	
K15	3#4, 1#6N, 1#8G	1 1/4"	1	
G15	1#8G	1/2"	1	
P15	2#8, 1#10G	3/4"	1	FOR 480 1Ø: 120/240 1Ø TRANSFORMERS
S15	3#4, 1#6G	1 1/2"	1	FOR 480 1Ø: 120/240 1Ø TRANSFORMERS
G15	1#6G	3/4"	1	FOR 480 1Ø: 120/240 1Ø TRANSFORMERS
P25	2#6, 1#10G	1"	1	FOR 480 1Ø: 120/240 1Ø TRANSFORMERS
D25	3#1, 1#6G	1 1/2"	1	FOR 480 1Ø: 120/240 1Ø TRANSFORMERS
G25	1#6G	3/4"	1	FOR 480 1Ø: 120/240 1Ø TRANSFORMERS
P30	3#6, 1#10G	3/4"	1	
S30	4#1, 1#6G	1 1/2"	1	
K30	3 #1/0, 1#2/0N, 1#6G	2"	1	
G30	1#6G	1/2"	1	
P37	2#1, 1#6G	1 1/4"	1	FOR 480 1Ø: 120/240 1Ø TRANSFORMERS
D37	3#3/0, 1#4G	3"	1	FOR 480 1Ø: 120/240 1Ø TRANSFORMERS
G37	1#4G	3/4"	1	FOR 480 1Ø: 120/240 1Ø TRANSFORMERS
P45	3#4, 1#8G	1"	1	
S45	4#1/0, 1#6G	1 1/2"	1	
K45	3#2/0, 1#250, 1#4G	2"	1	
G45	1#6G	1/2"	1	
P50	2#1, 1#6G	1 1/4"	1	
S50	3#3/0, 1#3G	2"	1	
G50	1#3G	3/4"	1	
P75	3#1, 1#8G	1 1/2"	1	
S75	4#4/0, 1#2G	2 1/2"	1	
K75	3#4/0, 2#3/0N, 1#2G	2 1/2"	1	
G75	1#1/0G	1/2"	1	
P75	2#3/0, 1#6G	2"	1	FOR 480 1Ø: 120/240 1Ø TRANSFORMERS
S75	3#3/0, 1#4G	2"	2	FOR 480 1Ø: 120/240 1Ø TRANSFORMERS
G75	1#4G	3/4"	1	FOR 480 1Ø: 120/240 1Ø TRANSFORMERS
P75A	3#1, 1#8G	1 1/2"	1	FOR 480 3Ø: 120/240 3Ø TRANSFORMERS
S75A	4#4/0, 1#2G	2 1/2"	1	FOR 480 3Ø: 120/240 3Ø TRANSFORMERS
G75A	1#2G	1/2"	1	FOR 480 3Ø: 120/240 3Ø TRANSFORMERS
P112	3#2/0, #6G	2"	1	
S112	4#3/0, 1#1/0G	2"	2	
K112	3#4/0, 1#350N, 1#1/0G	2 1/2"	2	
G112	1#1/0G	3/4"	1	
P150	3#250, 1#4G	2 1/2"	1	
S150	4#350, 1#2/0G	3"	2	
K150	3#350, 2#3/0N, 1#2/0G	3"	2	
G150	1#2/0G	3/4"	1	
P167	2#4/0, 1#2/0G	2"	2	FOR 480 1Ø: 120/240 1Ø TRANSFORMERS
S167	3#350, 1#3/0G	3"	3	FOR 480 1Ø: 120/240 1Ø TRANSFORMERS
G167	1#3/0G	3/4"	1	FOR 480 1Ø: 120/240 1Ø TRANSFORMERS
P225	3#500, 3#3G	3"	1	
S225	4#300, 1#2/0G	3"	1	
K225	3#350, 2#3/0, 1#1G	3 1/2"	3	
G225	1#2/0G	3/4"	1	

PBK
www.pbk.com
TX FIRM: BR 1608
HOUSTON, TX
713-365-0608

LEAF ENGINEERS

PKG 3A - GPHS NEW FIELDHOUSE
1000 Keene St.
Galena Park, TX 77547

CLIENT PROJECT NO: 240539

ISSUE FOR PROPOSAL

Galena Park ISD

KEY PLAN
NORTH: PLAN TRUE

STATE OF TEXAS
DONALD C. RICHARDS
61522
LICENSED
PROFESSIONAL ENGINEER
LEAF ENGINEERS
F-16672

CLIENT	
Galena Park ISD	
DATE: June 10, 2025	PROJECT NUMBER: 240539

DRAWING HISTORY

No.	Description	Date

CHECKED BY: Checker
DRAWN BY: BB

ELECTRICAL RISER DIAGRAM

E-502

Plot Stamp:
6/6/2025 10:17:29 AM

ELECTRICAL LIGHTING FIXTURE AND CONTACTOR SCHEDULE
E-601

FOR BLUEBEAM LABELING/OCR:

LESCO - LEAF - GALENA PARK HS - FIELD HOUSE

Type	Manufacturer/Brand	Catalog #	Lamp Type	Mounting	Voltage	Dimming	Description
A1	ABL-Lithonia Lighting	CPX 2X4 5000LM 80CRI 40K SWL MIN1 ZT MVOLT	40W 4000K 5000LM	RECESSED	MVOLT	0-10V	2X4 FLAT PANEL
A1H	ABL-Lithonia Lighting	CPX 2X4 5000LM 80CRI 40K SWL MIN1 ZT MVOLT DGA24	40W 4000K 5000LM	RECESSED	MVOLT	0-10V	2X4 FLAT PANEL - HARD CEILING
A2	ABL-Lithonia Lighting	CPX 2X4 4000LM 80CRI 40K SWL MIN1 ZT MVOLT	36.7W 4000K 4000LM	RECESSED	MVOLT	0-10V	2X4 FLAT PANEL
A2H	ABL-Lithonia Lighting	CPX 2X4 4000LM 80CRI 40K SWL MIN1 ZT MVOLT DGA24	36.7W 4000K 4000LM	RECESSED	MVOLT	0-10V	2X4 FLAT PANEL - HARD CEILING
A2WH	ABL-Lithonia Lighting	CPXIP 2X4 4000LM 80 40K ASWM MIN10 ZT MVOLT DGA24	36.7W 4000K 3000LM	RECESSED	MVOLT	0-10V	2X4 FLAT PANEL - HARD CEILING - WET LOCATION
A3	ABL-Lithonia Lighting	CPX 2X4 3000LM 80CRI 40K SWL MIN1 ZT MVOLT	24.6W 4000K 3000LM	RECESSED	MVOLT	0-10V	2X4 FLAT PANEL
A3H	ABL-Lithonia Lighting	CPX 2X4 3000LM 80CRI 40K SWL MIN1 ZT MVOLT DGA24	24.6W 4000K 3000LM	RECESSED	MVOLT	0-10V	2X4 FLAT PANEL - HARD CEILING
B1	ABL-Gotham Lighting	IVD45QS D 15LM 40K 80CRI MWD MIN1 MVOLT ZT NCH SF P AR LD P AR LD F	15W 4000K 1500LM	RECESSED	MVOLT	0-10V	CONFERENCE ROOM 4" SQUARE DOWNLIGHT
C1	ABL-Mark Architectural Lighting	S1PD LSL 8FT 90CRI 40K 600LMF SCT MIN1 FLL MVOLT XX(FINISH) ZT F2/36A RDCY WHTCY WCRD MCS	4.9W/FT 4000K 600LM/FT	SUSPENDED	MVOLT	0-10V	1.5" LINEAR FIXTURE MOUNTED IN WOOD SLAT CEILING
D1	EUREKA	4720-36 ST XX LED.LO 40 90 277V DV XX(FINISH)	38.2W 4000K 3784LM	SURFACE	277V	0-10V	ENTRY WAY 36" HEXIGONAL FIXTURE.
DNL	EUREKA	4721-36 ST XX(FINISH) XX (FELT FINISH)	N/A	SURFACE	N/A	N/A	ENTRY WAY 36" HEXIGONAL FIXTURE. NON-LIT - ACOUSTIC
E	FLUXWERX	LN1 P 6 G 06 B W1 8 40 A F2 M (HEXIGONAL SHAPE W/6FT SIDES)	9.5W/4FT 4000K 1114LM/4FT	PENDANT	MVOLT	NON-DIM	HEXIGONAL PATTERNED LINEAR FIXTURE. BLACK AND CUSTOM RAL GOLD FINISH. REFER TO ARCHITECT FOR MORE INFORMATION.
F1	ABL-Mark Architectural Lighting	SL4L LOP 6FT FLP TG 80CRI 40K 800LMF MIN10 277 ZT	8W/FT 4000K 800LM/FT	RECESSED	MVOLT	0-10V	4" RECESSED SATINE LENSED LINEAR - 6'
H1	LightArt	LA2 CON CONF 4H MCR 840CK STD STM WP WH - SEE DRAWINGS (CUSTOM SHAPE)	9.6W/FT 4000K 500L/FT	SUSPENDED	MVOLT	0-10V	CONFERENCE ROOM CONNECTED HEXIGON SHAPES WITH CUSTOM RAL GOLD MATERIAL. [1-120]
H1	LightArt	LA2 CON CONF 4H MCR 840CK STD STM WP WH - SEE DRAWINGS (CUSTOM SHAPE)	9.6W/FT 4000K 500L/FT	SUSPENDED	MVOLT	0-10V	CONFERENCE ROOM CONNECTED HEXIGON SHAPES WITH CUSTOM RAL GOLD MATERIAL. [2 - FORK]
J1	ABL-Lithonia Lighting	LBR6 NCH 15LM 40K AR LSS WD MVOLT UGZ WL	25W 400K 2000LM	RECESSED	MVOLT	0-10V	6" ROUND DNLT - WET LOCATION
JS	ABL-Gotham Lighting	EVD6SH 40/15 DFF SOL MVOLT EZ10	15W 4000K 1500LM	RECESSED	MVOLT	0-10V	6" ROUND DNLT - NON CONDUCTIVE - WET LOCATON
LW	a.Light	ALD3ST 4FT LS 40 80 U HE F XX(FINISH) D Q	19.2W 4000K 2300LM	SURFACE	MVOLT	0-10V	4' LINEAR EXTERIOR CANOPY
M1	Lithonia	CLX L48 5000LM SEF FDL MVOLT GZ10 40K 80CRI WH HC36 M12	32W 4000K 5000LM	SURFACE	MVOLT	0-10V	4' SURFACE OR SUSPENDED UTILITY STRIP
R1	a.Light	LIN 3 WP 6' LH 40K U BW P48 XX(FINISH) D K	10W/FT 4000K 844L/FT	SUSPENDED	MVOLT	0-10V	4" SUSPENDED/SURFACE LINEAR. BLACK FINISH - WET LOCATION
UC	Barron Lighting Group	LUCB-24-C	9W 4000K 803LM	SURFACE	MVOLT	0-10V	24" UNDERCABINET
W1	ABL-Lithonia Lighting	WDGE2 LED P3 40K 80CRI T3M MVOLT SRM XX(CONTROL) XX(FINISH)	32W 4000K 3200M	SURFACE	MVOLT	NON-DIM	WALL PACK
X	Barron Lighting Group	ILX-RG	2W INTEGRAL LED	SURFACE	MVOLT	NON-DIM	THERMOPLASTIC EXIT

CONTACTOR SCHEDULE

DESIG-NATION	CIRCUITS SERVED	CONTACTOR CHARACTERISTICS					REMARKS
		CONTACT AMPS	N.O. POLES	COIL VOLTS	CONTROL	SUPPLY CKT.	
C1-1	1HA-28	20	1	120	DDC	1LA-84	SIEMANS CLASS LC OR ABB CR460
C1-2	1HA-28	20	1	120	DDC	1LA-84	SIEMANS CLASS LC OR ABB CR460
C1-3	1HA-28	20	1	120	DDC	1LA-84	SIEMANS CLASS LC OR ABB CR460
C1-4	1HA-28	20	1	120	DDC	1LA-84	SIEMANS CLASS LC OR ABB CR460
C1-5,6	SPARE	20	2				SIEMANS CLASS LC OR ABB CR460

PROVIDE AS A SINGLE CONTACTOR

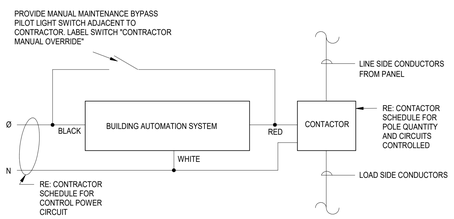

1 CONTACTOR CONTROL DIAGRAM
NOT TO SCALE

PBK
www.pbk.com
TX FIRM: BR 1608
HOUSTON, TX
713-965-0608

LEAF ENGINEERS

PKG 3A - GPHS NEW FIELDHOUSE
1000 Keene St.
Galena Park, TX 77547

CLIENT PROJECT NO: 240539
ISSUE FOR PROPOSAL

Galena Park ISD

KEY PLAN
NORTH: PLAN TRUE

STATE OF TEXAS
DONALD C. RICHARDS
61522
LICENSED
PROFESSIONAL ENGINEER

LEAF ENGINEERS
F-18672

CLIENT	
Galena Park ISD	
DATE: June 10, 2025	PROJECT NUMBER: 240539

DRAWING HISTORY

No.	Description	Date

CHECKED BY: Checker
DRAWN BY: BB

ELECTRICAL LIGHTING FIXTURE AND CONTACTOR SCHEDULE

E-601

Plot Stamp:
6/6/2025 10:17:29 AM

ELECTRICAL DETAILS
E-602
FOR BLUEBEAM LABELING/OCR:

0"
1"

GENERAL LIGHTING SCHDULES NOTES

1. REFER TO ARCHITECT'S REFLECTED CEILING PLAN AND RELATED DETAILS TO DETERMINE PROPER CEILING TYPE COMPATIBILITY FOR EACH LUMINAIRE. PROVIDE ANY EXTRA FITTINGS OR OPTIONS AS REQUIRED TO ENSURE CORRECT MOUNTING IN THE GIVEN CEILING.
2. PROVIDE FIRE RATED CANOPY OR ENCLOSURE FOR ALL FIXTURES RECESSED IN A FIRE RATED CEILING. THE FIRE RATED CANOPY OR ENCLOSURE SHALL BE REQUIRED BY THE UL DESIGN NUMBER LISTED IN THE UL FIRE RESISTANCE DIRECTORY. REFER TO ARCHITECTURAL DRAWING FOR THE UL DESIGN NUMBER. COORDINATE WITH CEILING INSTALLER AND MANUFACTURER.

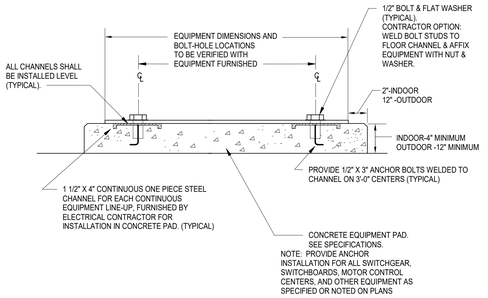

3 EQUIPMENT ANCHOR DETAIL
NOT TO SCALE

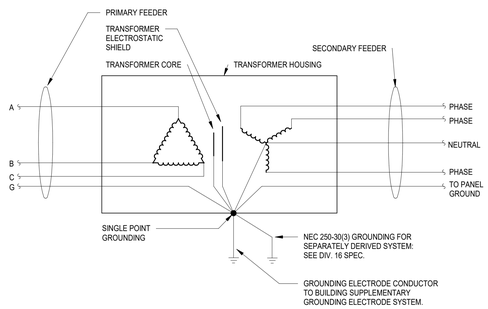

2 DELTA-WYE TRANSFORMER SCHEMATIC
NOT TO SCALE

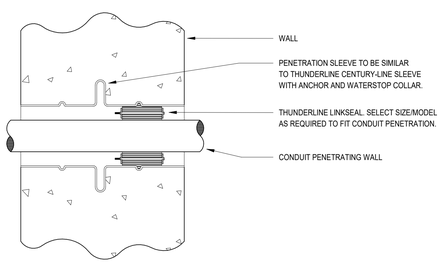

1 CONDUIT PENETRATION DETAIL - EXTERIOR WALL
NOT TO SCALE

PBK
www.pbk.com
TX FIRM: BR 9008
HOUSTON, TX
713-365-0608

LEAF ENGINEERS

PKG 3A - GPHS NEW FIELDHOUSE
1000 Keene St.
Galena Park, TX 77547

CLIENT PROJECT NO: 240539
ISSUE FOR PROPOSAL

Galena Park ISD

KEY PLAN
NORTH: PLAN TRUE

STATE OF TEXAS
DONALD C. RICHARDS
61525
LICENSED
PROFESSIONAL ENGINEER
LEAF ENGINEERS
F-16672

CLIENT	
Galena Park ISD	
DATE: June 10, 2025	PROJECT NUMBER: 240539

DRAWING HISTORY

No.	Description	Date

CHECKED BY: Checker
DRAWN BY: BB

ELECTRICAL DETAILS

E-602

Plot Stamp:
6/6/2025 10:17:30 AM

ELECTRICAL PANEL SCHEDULES
E-701
FOR BLUEBEAM LABELING/OCR:

0"
1"

Electrical...

AIC Rating: **65000**

Job: GPISD Field House

Volts - Phase: **480Y/277V-3PH 4W**

Job No.: 240539

DISTRIBUTI... **DPA**

Served From: UTILITY CO TRANSFORMER

Connected Load (KVA)

Cir. No.	Load Served	Amp/Poles	Wire and Conduit Size	Lighting	Conv. Outlets	Motors	Heating	Cooling	Others	Elect. Cooking	Spare/ Spaces	Elevators	Residential	Total KVA	Total Amps
1	2HA	225/3	SEE RISER	5.2	20.7	52.1	0.0	13.7	24.5	0.0				116.1	139.6
2	1HA	100/3	SEE RISER	7.2	0.0	9.6	3.0	0.0	0.0	0.0				19.8	23.9
3	ACCH-01	350/3	4#500, 1#3G, 3-1/2" C					217.7						217.7	261.9
4	RTU-01-01 (5 HP)	20/3	3#12, 1#12G, 1"C			6.3								6.3	7.6
5	RTU-01-02 (5 HP)	20/3	3#12, 1#12G, 1"C			6.3								6.3	7.6
6	RTU-01-03 (5 HP)	20/3	3#12, 1#12G, 1"C			6.3								6.3	7.6
7	XFMR 1TA	125/3	SEE RISER	1.9	17.7	22.2	0.0	0.0	34.7	0.0				76.4	91.9
8	SPACE													0.0	0.0
9	SPACE													0.0	0.0
10	SPACE													0.0	0.0
11	SPACE													0.0	0.0
12	SPACE													0.0	0.0
Total...				14.3	38.3	102.8	3.0	231.5	59.1	0.0	0.0	0.0	0.0	449.0	540.0
				--	--	--	--	--	--	--	--	--	--	--	--
Demand...				1.25	*	**	1.0	1.0	1.00	0.65	0.5	***	****	...	...
Total...				17.9	24.2	102.8	0.0	231.5	59.1	0.0	0.0	0.0	0.0	435.4	523.7

* 100% of...
** 125% of...
*** Elevator...
****
(1) PROVIDE METER MAIN, SEE ELECTRICAL RISER DIAGRAM FOR ADDITIONAL INFORMATION.

Largest... _____ KVA

Date: 6/6/2025 | By: Designer

DISTRIBUTION PANEL:		DPA
MAINS (1)	TYPE:	MAIN BREAKER
	SIZE:	800 AMP
BUS SIZE	PHASE:	800 AMP
	NEUTRAL:	800 AMP
	GROUND:	PER NEC

Job: GPISD Field House | Job No. 240539

Mounting **SURFACE** | Main... **MLO** | Neutral **200%**

Voltage: **208Y/120V-3PH 4W** | Main... **100 AMPS**

AIC... **10000** | Ground **Equipment Ground** | Lugs **FEED THRU**

PANEL: **1LG**

Ltg.	Recept	Motor	Heat	Cool	Other	Kitchen	S/S	Description	Amp/P	Wire	Cir. No.	Ph	Cir. No.	Wire	Amp/P	Description	Ltg.	Recept	Motor	Heat	Cool	Other	Kitchen	S/S
					1664		0.00	WASHER #1-LAUNDRY	20/2	12	1	A	2	12	20/2	DRYER #1-LAUNDRY						790		0.00
					1664		0.00	-	-	-	3	B	4	-	-	-						790		0.00
					1664		0.00	WASHER #2-LAUNDRY	20/2	12	5	C	6	12	20/2	DRYER #2-LAUNDRY						790		0.00
					1664		0.00	-	-	-	7	A	8	-	-	-						790		0.00
					1664		0.00	WASHER #3-LAUNDRY	20/2	12	9	B	10	12	20/2	DRYER #3-LAUNDRY						790		0.00
					1664		0.00	-	-	-	11	C	12	-	-	-						790		0.00
							1.00	SPARE	20/1		13	A	14		20/1	SPARE								1.00
							1.00	SPARE	20/1		15	B	16		20/1	SPARE								1.00
							1.00	SPARE	20/1		17	C	18		20/1	SPARE								1.00
							1.00	SPARE	20/1		19	A	20		20/1	SPARE								1.00
							1.00	SPARE	20/1		21	B	22		20/1	SPARE								1.00
							1.00	SPARE	20/1		23	C	24		20/1	SPARE								1.00
							1.00	SPARE	20/1		25	A	26		20/1	SPARE								1.00
							1.00	SPARE	20/1		27	B	28		20/1	SPARE								1.00
							1.00	SPARE	20/1		29	C	30		20/1	SPARE								1.00
							1.00	SPARE	20/1		31	A	32		20/1	SPARE								1.00
							1.00	SPARE	20/1		33	B	34		20/1	SPARE								1.00
							1.00	SPARE	20/1		35	C	36		20/1	SPARE								1.00
							1.00	SPARE	20/1		37	A	38	10	30/3	SPD								0.00
							1.00	SPARE	20/1		39	B	40	-	-	-								1.00
							1.00	SPARE	20/1		41	C	42	-	-	-								0.00
0	0	0	0	0	0	9984	0	15.00	**TOTALS**							**TOTALS**	0	0	0	0	0	4742	0	12.00

LOAD SUMMARY								
Ltg.	Recept	Motor	Heat	Cool	Other	Kitchen	S/S	Description
0.0	0.0	0.0	0.0	0.0	14.7	0.0	27.0	Connected KVA
1.25	**	1.00	1.00	1.00	1.00	0.65	0.50	*Design Factors
0.0	0.0	0.0	0.0	0.0	14.7	0.0	13.5	Design KVA

Phase Load	
Ph.	KVA
A	4.9
B	4.9
C	4.9

Panel Remarks:

*Input di...
**100% ...

	Con. KVA	Con. Amps		Des. KVA	Des. Amps
TOTAL	41.7	115.8		28.2	78.3

PANEL: **1LG**

Date: 6/6/2025 | By: Designer

Job: GPISD Field House | Job No. 240539

Mounting **SURFACE** | Main... **MCB (225A) (1)** | Neutral **100%**

Voltage: **480Y/277V-3PH 4W** | Main... **225 AMPS**

AIC... **42000** | Ground **Equipment Ground** | Lugs **FEED THRU**

PANEL: **1HA**

Ltg.	Recept	Motor	Heat	Cool	Other	Kitchen	S/S	Description	Amp/P	Wire	Cir. No.	Ph	Cir. No.	Wire	Amp/P	Description	Ltg.	Recept	Motor	Heat	Cool	Other	Kitchen	S/S
		943					0.00	SHWP-01	15/3	12	1	A	2	12	15/3	JP-1			305					0.00
		943					0.00	-	-	-	3	B	4	-	-	-			305					0.00
		943					0.00	-	-	-	5	C	6	-	-	-			305					0.00
		1328					0.00	CHP-01	30/3	12	7	A	8	12	15/3	DWP-1			637					0.00
		1328					0.00	-	-	-	9	B	10	-	-	-			637					0.00
		1328					0.00	-	-	-	11	C	12	-	-	-			637					0.00
							0.00	SPACE			13	A	14	12	15/3	EUH-01				1000				0.00
							0.00	SPACE			15	B	16	-	-	-				1000				0.00
							0.00	SPACE			17	C	18	-	-	-				1000				0.00
							0.00	SPACE			19	A	20			SPACE								0.00
							0.00	SPACE			21	B	22			SPACE								0.00
							0.00	SPACE			23	C	24			SPACE								0.00
0	0	6813	0	0	0	0	0.00	**TOTALS**								**TOTALS**	0	0	2825	3000	0	0	0	0.00

PANEL: **1HA** | **2** | **(Sectio...**

Ltg.	Recept	Motor	Heat	Cool	Other	Kitchen	S/S	Description	Amp/P	Wire	Cir. No.	Ph	Cir. No.	Wire	Amp/P	Description	Ltg.	Recept	Motor	Heat	Cool	Other	Kitchen	S/S
2400								1ST FLOOR LTG	20/1	12	25	A	26	12	20/1	WEIGHT ROOM LTG	3200							0.00
1300								1ST FLOOR CORR LTG	20/1	12	27	B	28	12	20/1	EXTEIOR LTG (1)	301							0.00
							0.00	SPACE			29	C	30			SPACE								0.00
							0.00	SPACE			31	A	32			SPACE								0.00
							0.00	SPACE			33	B	34			SPACE								0.00
							0.00	SPACE			35	C	36			SPACE								0.00
							0.00	SPACE			37	A	38			SPACE								0.00
							0.00	SPACE			39	B	40			SPACE								0.00
							0.00	SPACE			41	C	42			SPACE								0.00
							0.00	SPACE			43	A	44			SPACE								0.00
							0.00	SPACE			45	B	46			SPACE								0.00
							0.00	SPACE			47	C	48			SPACE								0.00
3700	0	0	0	0	0	0	0.00	**TOTALS**								**TOTALS**	3501	0	0	0	0	0	0	0.00

LOAD SUMMARY								
Ltg.	Recept	Motor	Heat	Cool	Other	Kitchen	S/S	Description
7.2	0.0	9.6	3.0	0.0	0.0	0.0	0.0	Connected KVA
1.25	**	1.00	1.00	1.00	1.00	0.65	0.50	*Design Factors
9.0	0.0	9.6	3.0	0.0	0.0	0.0	0.0	Design KVA

Phase Load	
Ph.	KVA
A	9.8
B	5.8
C	4.2

Panel Remarks:
(1) PROVIDE BRANCH CIRUCIT METER FOR CIRCUIT, SEE ELECTRICAL RISER DIAGRAM METER 7

(2) PROVIDE METER MAIN. SEE ELECTRICAL RISER DIAGRAM FOR ADDITIONAL INFORMATION.

*Input di...
**100% ...

	Con. KVA	Con. Amps		Des. KVA	Des. Amps
TOTAL	19.8	23.9		21.6	26.0

PANEL: **1HA**

Date: 6/6/2025 | By: Designer

Job: GPISD Field House | Job No. 240539

Mounting **SURFACE** | Main... **MCB (225A) (3)** | Neutral **200%**

Voltage: **208Y/120V-3PH 4W** | Main... **225 AMPS**

AIC... **10000** | Ground **Equipment Ground** | Lugs **FEED THRU**

PANEL: **2LA**

Ltg.	Recept	Motor	Heat	Cool	Other	Kitchen	S/S	Description	Amp/P	Wire	Cir. No.	Ph	Cir. No.	Wire	Amp/P	Description	Ltg.	Recept	Motor	Heat	Cool	Other	Kitchen	S/S
		900					0.00	RECP - RR ELEC STOR	20/1	12	1	A	2	12	20/1	RECP - TEAM RM #1		900						0.00
		900					0.00	RECP - COND #1	20/1	12	3	B	4	12	20/1	RECP - TEAM RM #2		720						0.00
		720					0.00	RECP - COND #2	20/1	12	5	C	6	12	20/1	RECP - TEAM RM #3		900						0.00
		180					0.00	RECP - KITCH #1	20/1	12	7	A	8	12	20/1	RECP - MICRO #1 (1)						1200		0.00
		180					0.00	RECP - KITCH #2	20/1	12	9	B	10	12	20/1	RECP - MICRO #2 (1)						1200		0.00
		180					0.00	RECP - KITCH #3	20/1	12	11	C	12	12	20/1	RECP - FRIDGE (1)						900		0.00
		180					0.00	RECP - KITCH #4	20/1	12	13	A	14	12	20/1	RECP - SER COUNT #1		180						0.00
		180					0.00	RECP - SER COUNT #2	20/1	12	15	B	16	12	20/1	RECP - SER COUNT #3		500						0.00
		1260					0.00	RECP - STORAGE	20/1	12	17	C	18	12	20/1	RECP - VIDEO REV #1		900						0.00
		900					0.00	RECP - HALL, BATH	20/1	12	19	A	20	12	20/1	RECP - VIDEO RM		1080						0.00
		720					0.00	RECP - GROUP INST	20/1	12	21	B	22	12	20/1	RECP - COACH OFF #1		540						0.00
		720					0.00	RECP - COACH OFF #2	20/1	12	23	C	24	12	20/1	RECP - COACH OFF #3		540						0.00
		540					0.00	RECP - COACH OFF #4	20/1	12	25	A	26	12	20/1	RECP - PRINTER #1						1200		0.00
						1200	0.00	RECP - PRINTER #2	20/1	12	27	B	28	12	20/1	RECP - VIDEO REV #2		900						0.00
		1080					0.00	RECP - CONF	20/1	12	29	C	30	12	20/1	RECP - FLR BOX / TV		750						0.00
						500	0.00	RECP - CONF COUN #1	20/1	12	31	A	32	12	20/1	RECP - CONF COUN #2						500		0.00
						1200	0.00	RECP - CONF COUN #3	20/1	12	33	B	34	12	20/1	RECP - FRIDGE (2)						800		0.00
						500	0.00	MOTORIZD SHADES #5	20/1	12	35	C	36	12	20/1	RECP - CORRIDOR/ELEC		1080						0.00
						500	0.00	MOTORIZD SHADES #6	20/1	12	37	A	38	10	30/3	SPD								0.00
						500	0.00	MOTORIZD SHADES #7	20/1	12	39	B	40	-	-	-								0.00
						500	0.00	MOTORIZD SHADES #8	20/1	12	41	C	42	-	-	-								0.00
0	8640	0	0	0	4900	0	0.00	**TOTALS**								**TOTALS**	0	8990	0	0	0	5800	0	0.00

PANEL: **2LA** | **2** | **(Sectio...**

Ltg.	Recept	Motor	Heat	Cool	Other	Kitchen	S/S	Description	Amp/P	Wire	Cir. No.	Ph	Cir. No.	Wire	Amp/P	Description	Ltg.	Recept	Motor	Heat	Cool	Other	Kitchen	S/S
					500		0.00	RECP-CON PROJ (2)	20/1	12	43	A	44	12	30/2	ACCU-IDF-1960					2288			0.00
					500		0.00	RECP-TEAM PROJ (2)	20/1	12	45	B	46	-	-	-					2288			0.00
					500		0.00	RECP-TEAM PROJ #2 (2)	20/1	12	47	C	48	12	30/2	ACCU-ELEC RM-1913					2288			0.00
	720						0.00	RECP-GP RECS IDF 1929	20/1	12	49	A	50	-	-	-					2288			0.00
					1200		0.00	RECP - IDF 1960	20/1	12	51	B	52	12	20/1	EF-2-03			420					0.00
					2000		0.00	RECP - IDF 1960 #2	30/1	12	53	C	54	12	20/1	EF-2-02			400					0.00
					2000		0.00	RECP - IDF 1960 #3	30/1	12	55	A	56	12	20/1	EF-2-01			420					0.00
					1200		0.00	RECP - IDF 1960 #4	20/1	12	57	B	58	12	30/2	ACCU-RISER RM-1907					2288			0.00
					1200		0.00	RECP - IDF 1960 #5	20/1	12	59	C	60	-	-	-					2288			0.00
	1080						0.00	RECP - ROOFTOP RECS	20/1	12	61	A	62	10	30/1	ELEV. CONTROL	1500							0.00
					1000		0.00	AV CIRUCIT	20/1	12	63	B	64	10	30/1	ELEV. CAB LIGHT						1750		0.00
					1000		0.00	AV CIRUCIT	20/1	12	65	C	66	12	20/1	RR 1965/1964 SENSR						400		0.00
	500						0.00	RECP - GROUP INST #2	20/1	12	67	A	68	12	20/1	RTU-1-01 UVC						500		0.00
					500		0.00	RECP - GROUP INST #3	20/1	12	69	B	70	12	20/1	RTU-1-02 UVC						500		0.00
	720						0.00	RECP - AD OFF/BATH	20/1	12	71	C	72	12	20/1	RTU-1-03 UVC						500		0.00
							1.00	SPARE	20/1		73	A	74	12	20/1	RTU-2-01 UVC						500		0.00
							1.00	SPARE	20/1		75	B	76	12	20/1	RTU-2-02 UVC						500		0.00
							1.00	SPARE	20/1		77	C	78		20/1	SPARE								1.00
							1.00	SPARE	20/1		79	A	80		20/1	SPARE								1.00
							1.00	SPARE	20/1		81	B	82		20/1	SPARE								1.00
							1.00	SPARE	20/1		83	C	84		20/1	SPARE								1.00
0	3020	0	0	0	11600	0	6.00	**TOTALS**								**TOTALS**	1500	0	1240	0	13728	4650	0	4.00

LOAD SUMMARY								
Ltg.	Recept	Motor	Heat	Cool	Other	Kitchen	S/S	Description
1.5	20.7	1.2	0.0	13.7	27.0	0.0	10.0	Connected KVA
1.25	**	1.00	1.00	1.00	1.00	0.65	0.50	*Design Factors
1.9	15.3	1.2	0.0	13.7	27.0	0.0	5.0	Design KVA

Phase Load	
Ph	KVA
A	21.1
B	21.7
C	21.3

Panel Remarks:
(1)GFI GROUND FAULT INTERRUPTOR
(2)LOCKABLE OPEN
(3) PROVIDE METER MAIN, SEE ELECTRICAL RISER DIAGRAM FOR ADDITIONAL INFORMATION.

*Input di...
**100% ...

	Con. KVA	Con. Amps		Des. KVA	Des. Amps
TOTAL	74.1	205.6		64.1	178.0

PANEL: **2LA**

Date: 6/6/2025 | By: Designer

Job: GPISD Field House | Job No. 240539

Mounting **SURFACE** | Main... **MCB (225A) (1)** | Neutral **100%**

Voltage: **480Y/277V-3PH 4W** | Main... **225 AMPS**

AIC... **42000** | Ground **Equipment Ground** | Lugs **FEED THRU**

PANEL: **2HA**

Ltg.	Recept	Motor	Heat	Cool	Other	Kitchen	S/S	Description	Amp/P	Wire	Cir. No.	Ph	Cir. No.	Wire	Amp/P	Description	Ltg.	Recept	Motor	Heat	Cool	Other	Kitchen	S/S
		1524					0.00	CVB-2-01-01	15/1	12	1	A	2	12	15/3	RTU-2-01			1330					0.00
		803					0.00	CVB-2-01-02	15/1	12	3	B	4	-	-	(3 HP)			1330					0.00
		803					0.00	CVB-2-01-03	15/1	12	5	C	6	-	-	-			1330					0.00
		803					0.00	CVB-2-01-04	15/1	12	7	A	8	12	15/3	RTU-2-02			1330					0.00
		803					0.00	CVB-2-01-05	15/1	12	9	B	10	-	-	(3 HP)			1330					0.00
		1080					0.00	CVB-2-01-06	15/1	12	11	C	12	-	-	-			1330					0.00
		803					0.00	CVB-2-01-07	15/1	12	13	A	14	12	15/3	CVB-2-02-03			1080					0.00
		803					0.00	CVB-2-01-08	15/1	12	15	B	16	12	15/3	CVB-2-02-04			1080					0.00
		803					0.00	CVB-2-01-09	15/1	12	17	C	18	12	15/3	CVB-2-02-05			1080					0.00
		803					0.00	CVB-2-02-01	15/1	12	19	A	20	12	15/3	CVB-2-02-06			803					0.00
		1524					0.00	CVB-2-02-02	15/1	12	21	B	22			SPACE								0.00
							0.00	SPACE			23	C	24			SPACE								0.00
0	0	10554	0	0	0	0	0.00	**TOTALS**								**TOTALS**	0	0	12024	0	0	0	0	0.00

PANEL: **2HA** | **2** | **(Sectio...**

Ltg.	Recept	Motor	Heat	Cool	Other	Kitchen	S/S	Description	Amp/P	Wire	Cir. No.	Ph	Cir. No.	Wire	Amp/P	Description	Ltg.	Recept	Motor	Heat	Cool	Other	Kitchen	S/S
2400							0.00	2ND FLOOR LTG	20/1	12	25	A	26	6	70/3	ELEVATOR			9412					0.00
1300							0.00	2ND FLOOR CORR LTG	20/1	12	27	B	28	-	-	(2SHP)			9412					0.00
							0.00	SPACE			29	C	30	-	-	-			9412					0.00
							0.00	SPACE			31	A	32			SPACE								0.00
							0.00	SPACE			33	B	34			SPACE								0.00
							0.00	SPACE			35	C	36			SPACE								0.00
							0.00	SPACE			37	A	38			SPACE								0.00
							0.00	SPACE			39	B	40			SPACE								0.00
							0.00	SPACE			41	C	42			SPACE								0.00
							0.00	SPACE			43	A	44	SEE	125/3	XFMR 2LA	500	6883	413	0	4576	8150	0	0.00
							0.00	SPACE			45	B	46	RISER	-	-	500	6883	413	0	4576	8150	0	0.00
							0.00	SPACE			47	C	48	-	-	-	500	6883	413	0	4576	8150	0	0.00
3700	0	0	0	0	0	0	0.00	**TOTALS**								**TOTALS**	1500	20650	29476	0	13728	24450	0	0.00

LOAD SUMMARY								
Ltg.	Recept	Motor	Heat	Cool	Other	Kitchen	S/S	Description
5.2	20.7	52.1	0.0	13.7	24.5	0.0	0.0	Connected KVA
1.25	**	1.00	1.00	1.00	1.00	0.65	0.50	*Design Factors
6.5	15.3	52.1	0.0	13.7	24.5	0.0	0.0	Design KVA

Phase Load	
Ph.	KVA
A	40.8
B	38.9
C	36.4

Panel Remarks:
(1) PROVIDE METER MAIN, SEE ELECTRICAL RISER DIAGRAM FOR ADDITIONAL INFORMATION.

*Input di...
**100% ...

	Con. KVA	Con. Amps		Des. KVA	Des. Amps
TOTAL	116.1	139.6		112.1	134.8

PANEL: **2HA**

Date: 6/6/2025 | By: Designer

PBK
www.pbk.com
TX FIRM: BR 1608
HOUSTON, TX
713-965-0608

LEAF ENGINEERS

PKG 3A - GPHS NEW FIELDHOUSE
1000 Keene St.
Galena Park, TX 77547

CLIENT PROJECT NO: 240539
ISSUE FOR PROPOSAL

Galena Park ISD

KEY PLAN
NORTH: PLAN TRUE

STATE OF TEXAS
DONALD C. RICHARDS
61522
PROFESSIONAL ENGINEER

LEAF ENGINEERS
F-16672

CLIENT	
Galena Park ISD	
DATE: June 10, 2025	PROJECT NUMBER: 240539

DRAWING HISTORY

No.	Description	Date

CHECKED BY: Checker
DRAWN BY: BB

ELECTRICAL PANEL SCHEDULES

E-701

Plot Stamp:
6/6/2025 10:17:30 AM

ELECTRICAL PANEL SCHEDULES
E-702
FOR BLUEBEAM LABELING/OCR:

0"
1"

Job: GPISD Field House
Job No. 240539

Mounting: **SURFACE**
Main... **MCB (225A) (2)**
Neutral **200%**

Voltage: **208Y/120V-3PH 4W**
Main... **400 AMPS**

AIC... **10000**
Ground **Equipment Ground**
Lugs **FEED THRU**

PANEL: **1LA**

ALL LOADS IN VA

Ltg.	Receptl	Motor	Heat	Cool	Other	Kitchen	S/S	Description	Amp/P	Wire	Cir. No.	Ph	Cir. No.	Wire	Amp/P	Description	Ltg.	Receptl	Motor	Heat	Cool	Other	Kitchen	S/S
	900						0.00	RECP - VAR LOCK	20/1	12	**1**	**A**	**2**	12	20/1	RECP - CORRIDOR		1080						0.00
					430		0.00	RECP - WT RM COORD	20/1	12	**3**	**B**	**4**	12	20/1	RECP - TRAINER OFF PC		1080						0.00
	720						0.00	RECP - JV/FRESH LOCK	20/1	12	**5**	**C**	**6**	12	20/1	RECP - TRAINER OFF GP		720						0.00
	720						0.00	RECP - CUST/RISER RM	20/1	12	**7**	**A**	**8**	12	20/1	RECP - LOCKERS/RR		1260						0.00
					610		0.00	RECP - EQUIP RM	20/1	12	**9**	**B**	**10**	12	20/1	RECP - SOC/BBALL LKR		720						0.00
	1260						0.00	RECP - WEIGHT RM	20/1	12	**11**	**C**	**12**	12	20/1	RECP - TRAIN RM #1		500						0.00
	540						0.00	RECP - RR GR RECS	20/1	12	**13**	**A**	**14**	12	20/1	RECP - TRAIN RM #2		500						0.00
					1040		0.00	RECP - OFF 1912	20/1	12	**15**	**B**	**16**	12	20/1	RECP - TRAIN RM #3		720						0.00
	720						0.00	RECP - PUMP/LAUND RM	20/1	12	**17**	**C**	**18**	12	20/1	RECP - TRAIN RM #4		1260						0.00
	540						0.00	RECP - ELEC 1913	20/1	12	**19**	**A**	**20**	12	20/1	RECP - HYDRO THRPW1						1488		0.00
					200		0.00	RECP - RR 1926 SENSR	20/1	12	**21**	**B**	**22**	12	20/1	RECP - HYDRO THRPW2						1488		0.00
	540						0.00	RECP - RR RECS	20/1	12	**23**	**C**	**24**	12	20/1	RECP - HYDRO THRPW3		540						0.00
	1000						0.00	RECP - ATVS WT RM	20/1	12	**25**	**A**	**26**	12	20/1	RECP - PT AREA TREAD						650		0.00
	720						0.00	RECP - EXT RECS	20/1	12	**27**	**B**	**28**	12	20/1	RECP - PT AREA STAIR						650		0.00
	720						0.00	RECP - EXT RECS #2	20/1	12	**29**	**C**	**30**	12	20/1	ELEV CONTROLS	1920							0.00
					500		0.00	MOTORIZD SHADES #1	20/1	12	**31**	**A**	**32**	12	20/1	SUMP PUMP			500					0.00
					500		0.00	MOTORIZD SHADES #2	20/1	12	**33**	**B**	**34**	12	20/1	RECP - ELEV						250		0.00
					500		0.00	MOTORIZD SHADES #3	20/1	12	**35**	**C**	**36**	12	20/1	HEAT TRACING						150		0.00
					500		0.00	MOTORIZD SHADES #4	20/1	12	**37**	**A**	**38**	10	30/3	SPD								0.00
							1.00	SPARE	20/1		**39**	**B**	**40**	-	-	-								0.00
							1.00	SPARE	20/1		**41**	**C**	**42**	-	-	-								0.00
0	8380	0	0	0	4280	0	2.00	**TOTALS**								**TOTALS**	1920	8380	500	0	0	4676	0	0.00

PANEL: **1LA** **2** **(Sectio...**

ALL LOADS IN VA

Ltg.	Receptl	Motor	Heat	Cool	Other	Kitchen	S/S	Description	Amp/P	Wire	Cir. No.	Ph	Cir. No.	Wire	Amp/P	Description	Ltg.	Receptl	Motor	Heat	Cool	Other	Kitchen	S/S
		1656					0.00	EF-1-02	30/1	10	**43**	**A**	**44**	12	20/1	RECP-VEND MACH(1)						800		0.00
		456					0.00	EF-1-03	15/1	12	**45**	**B**	**46**	12	20/1	RECP-VEN MACH#2(1)						800		0.00
		1656					0.00	EF-1-01	30/1	10	**47**	**C**	**48**	12	20/1	RECP-VEN MACH#3(1)						800		0.00
		920					0.00	B-01	15/1	12	**49**	**A**	**50**	12	20/2	RECP - ICEMAKER#1(1)						1352		0.00
							1.00	SPARE	20/1		**51**	**B**	**52**	-	-	-						1352		0.00
					500		0.00	BAS PANEL	20/1	12	**53**	**C**	**54**	12	20/2	RECP - ICEMAKER#1(1)						1352		0.00
	-	3120					0.00	PHWP-01	20/2	12	**55**	**A**	**56**	-	-	-						1352		0.00
		3120					0.00	-	-	-	**57**	**B**	**58**	12	20/1	RECP - EDP #1 (1)						720		0.00
		1656					0.00	EF-1-04	30/1	10	**59**	**C**	**60**	12	20/1	RECP - EDP #2 (1)						720		0.00
		1176					0.00	CF-01	20/1	12	**61**	**A**	**62**	12	20/1	RECP - EDP #3 (1)						720		0.00
		1176					0.00	CF-02	20/1	12	**63**	**B**	**64**	12	20/1	GWI-1 & 2 STARTER						100		0.00
		1176					0.00	CF-03	20/1	12	**65**	**C**	**66**	12	20/1	MOTORIZED COIL DOOR						300		0.00
		1176					0.00	CF-04	20/1	12	**67**	**A**	**68**	12	20/1	CO SENSOR - PUMP RM						100		0.00
	500						0.00	TRAP PRIMERS 1-5	20/1	12	**69**	**B**	**70**		20/1	SPARE								1.00
	400						0.00	TRAP PRIMERS 6-9	20/1	12	**71**	**C**	**72**		20/1	SPARE								1.00
							1.00	SPARE	20/1		**73**	**A**	**74**		20/1	SPARE								1.00
							1.00	SPARE	20/1		**75**	**B**	**76**		20/1	SPARE								1.00
							1.00	SPARE	20/1		**77**	**C**	**78**		20/1	SPARE								1.00
							1.00	SPARE	20/1		**79**	**A**	**80**		20/1	SPARE								1.00
							1.00	SPARE	20/1		**81**	**B**	**82**		20/1	SPARE								1.00
							1.00	SPARE	20/1		**83**	**C**	**84**		20/1	SPARE								1.00
0	900	17288	0	0	500	0	7.00	**TOTALS**								**TOTALS**	0	0	0	0	0	10468	0	8.00

LOAD SUMMARY

Ltg.	Receptl	Motor	Heat	Cool	Other	Kitchen	S/S	Description
1.9	17.7	17.8	0.0	0.0	34.7	0.0	44.0	Connected KVA
1.25	**	1.00	1.00	1.00	1.00	0.65	0.50	*Design Factors
2.4	13.8	17.8	0.0	0.0	34.7	0.0	22.0	Design KVA

*Input di...
**100% ...

	Con. KVA	Con. Amps		Des. KVA	Des. Amps
TOTAL	116.0	322.0		90.7	251.7

Phase Load

Ph	KVA
A	22.6
B	16.6
C	18.1

Panel Remarks:
(1)GFI GROUND FAULT INTERRUPTOR
(2) PROVIDE METER MAIN. SEE ELECTRICAL RISER DIAGRAM FOR ADDITIONAL INFORMATION.

PANEL: **1LA**

Date: 6/6/2025 By: Designer

Plot Stamp:
6/6/2025 10:17:30 AM

PBK
www.pbk.com
TX FIRM: BR 1608
HOUSTON, TX
713-965-0608

LEAF ENGINEERS

PKG 3A - GPHS NEW FIELDHOUSE
1000 Keene St.
Galena Park, TX 77547

CLIENT PROJECT NO: 240539
ISSUE FOR PROPOSAL

Galena Park ISD

KEY PLAN
NORTH: PLAN TRUE

STATE OF TEXAS
DONALD C. RICHARDS
61522
LICENSED
PROFESSIONAL ENGINEER

LEAF ENGINEERS
F-18672

CLIENT	
Galena Park ISD	
DATE: June 10, 2025	PROJECT NUMBER: 240539

DRAWING HISTORY

No.	Description	Date

CHECKED BY: Checker
DRAWN BY: BB

ELECTRICAL PANEL SCHEDULES

E-702

PLUMBING COVER SHEET
P-000
FOR BLUEBEAM LABELING/OCR:

0"
1"

PLUMBING ABBREVIATION SCHEDULE

(A)	ITEM NOTED TO BE ABANDONED	KW	KILOWATTS
(D)	ITEM NOTED TO BE DEMOLISHED	L	LAVATORY
(E)	EXISTING ITEM	MAP	MASTER ALARM PANEL
(N)	NEW ITEM	MECH	MECHANICAL
(R)	ITEM NOTED TO BE RELOCATED	MH	MANHOLE
AAP	AREA ALARM PANEL	MS	MOP SINK
AAV	AUTOMATIC AIR VENT	NC	NORMALLY CLOSED
AFF	ABOVE FINISHED FLOOR	NIC	NOT IN CONTRACT
AP	ACCESS PANEL	NO	NORMALLY OPEN
BFF	BELOW FINISHED FLOOR	OF / CI	OWNER FURNISHED / CONTRACTOR INSTALLED
BFPV	BACKFLOW PREVENTER	OF / OI	OWNER FURNISHED / OWNER INSTALLED
BOB	BOTTOM OF BEAM	OD	OVERFLOW DRAIN
BOP	BOTTOM OF PIPE	OW	OIL WASTE
BTUH	BRITISH THERMAL UNITS PER HOUR	PIV	POST INDICATOR VALVE
C / C	CUT AND CAP	PRV	PRESSURE REDUCING VALVE
CFH	CUBIC FEET PER HOUR	RD	ROOF DRAIN
CFS	CUBIC FEET PER SECOND	RE:	REFER TO
CI	CAST IRON	RIC	ROUGH-IN AND CONNECT
CLG	CEILING	RO	REVERSE OSMOSIS
CO	CLEANOUT	RP BFPV	REDUCED PRESSURE BACKFLOW PREVENTER
CONN	CONNECTION	RPM	REVOLUTIONS PER MINUTE
CONT	CONTINUATION	RVB	REFRIGERATOR VALVE BOX
DF	DRINKING FOUNTAIN	SD	STORM DRAIN
DPV	DRY PIPE VALVE	SF	SQUARE FEET
DWG	DRAWING	SS	SERVICE (MOP) SINK
EA	EACH	SK	SINK
EDF	ELECTRIC DRINKING FOUNTAIN	TMV	THERMOSTATIC MIXING VALVE
FCO	FLOOR CLEANOUT	TOP	TOP OF PIPE
FD	FLOOR DRAIN	TP	TRAP PRIMER
FDV	FIRE DEPARTMENT VALVE	TYP	TYPICAL
FF	FINISHED FLOOR	U	URINAL
FHC	FIRE HOSE CABINET	U/F	UNDERFLOOR
FL	FLOW LINE	U/S	UNDERSLAB
FS	FLOOR SINK	VB	VACUUM BREAKER
FT	FEET	VCT	VITRIFIED CLAY TILE
FU	FIXTURE UNIT	VTR	VENT THRU ROOF
GC	GENERAL CONTRACTOR	WC	WATER CLOSET
GPH	GALLONS PER HOUR	WCO	WALL CLEANOUT
GPM	GALLONS PER MINUTE	WH	WALL HYDRANT
HB	HOSE BIBB	WMB	WASHING MACHINE BOX
HP	HORSEPOWER	YH	YARD HYDRANT
IE	INVERT ELEVATION	ZV	ZONE VALVE

NOTES:

1. NOT ALL ABBREVIATIONS MAY BE USED ON THESE DRAWINGS.

PLUMBING FIXTURE CONNECTION SCHEDULE

DESCRIPTION	WASTE	TRAP	VENT	DFU	BRANCH CONN		FIXTURE CONN		FIXTURE UNITS		REMARKS
					CW	HW	CW	HW	CW	HW	
WATER CLOSET (FV)	4"	-	2"	4	1-1/4"	-	1"	-	10.00	-	INTEGRAL TRAP
WATER CLOSET (FT)	4"	-	2"	3	3/4"	-	1/2"	-	2.50	-	INTEGRAL TRAP
LAVATORY	2"	1-1/4"	2"	1	3/4"	3/4"	1/2"	1/2"	0.75	0.75	PROVIDE TMV
SHOWER	2"	2"	2"	2	3/4"	3/4"	1/2"	1/2"	1.50	1.50	PROVIDE TMV
BATH TUB	2"	1-1/2"	2"	3	3/4"	3/4"	1/2"	1/2"	3.00	3.00	PROVIDE TMV
SINK	2"	1-1/2"	2"	2	3/4"	3/4"	1/2"	1/2"	1.13	1.13	PROVIDE TMV
WASHING MACHINE	2"	2"	2"	3	3/4"	3/4"	1/2"	1/2"	3.00	3.00	-
SERVICE SINK	2"	1-1/2"	2"	2	3/4"	3/4"	1/2"	1/2"	2.25	2.25	PROVIDE TMV
HOSE BIBB	-	-	-	-	3/4"	-	3/4"	-	2.50	-	-
FLOOR SINK	2"	2"	2"	2	-	-	-	-	-	-	RE: DRAWINGS FOR SIZE
FLOOR DRAIN	3"	3"	2"	4	-	-	-	-	-	-	RE: DRAWINGS FOR SIZE
ICE MACHINE	-	-	-	-	3/4"	-	1/2"	-	1.00	-	-

NOTES:

1. ROUGH-IN SUPPLY WASTE AND VENT PIPE SIZES INDICATED ABOVE ARE MINIMUM SIZES SHOWN FOR ROUGH-IN ONLY.
2. COORDINATE WITH PLUMBING FIXTURE MANUFACTURER'S INSTALLATION DRAWINGS FOR PROPER AND CORRECT INSTALLATION OF ALL FIXTURES.
3. ALL PLUMBING FIXTURES SHALL BE COMPLETELY ROUGHED-IN BY THE PLUMBING CONTRACTOR AND SHALL MEET ALL CODES HAVING JURISDICTION.
4. ALL FIXTURES SHALL BE COMMERCIAL GRADE UNLESS OTHERWISE NOTED.
5. PROVIDE AND INSTALL A WATER HAMMER ARRESTOR IN PIPING TO ALL FIXTURES AND/OR FIXTURE BANKS.

PLUMBING SYMBOLS LEGEND

DRAWINGS	DETAILS	ABV.	DESCRIPTION
	AV	AV	ACID VENT
	AW	AW	ACID WASTE
	CA	CA	COMPRESSED AIR
	CW	CW	COLD WATER
		(D)	DEMOLISHED PIPING OR EQUIPMENT
	D	D	CONDENSATE
	DSP	DSP	DRY SPRINKLER
		(E)	EXISTING PIPING OR EQUIPMENT
	F	F	FIRE
	G	G	NATURAL GAS
	GW	GW	GREASE WASTE
		HW	HOT WATER
		HWR	HOT WATER RETURN
	OD	OD	OVERFLOW DRAIN
	SD	SD	STORM DRAIN
	SP	SP	SPRINKLER
	SS	SS	SANITARY SEWER
		V	VENT
			DIRECTION OF FLOW
			DROP IN PIPE
			RISE IN PIPE
			GATE VALVE
			BALL VALVE
			CHECK VALVE
			SUPERVISED VALVE WITH FLOW SWITCH
			PLUG VALVE / GAS COCK
			BUTTERFLY VALVE
			HOT WATER BALANCING VALVE
			PIPE UNION
			PRESSURE CONTROL VALVE
			3-WAY VALVE
			SOLENOID VALVE
			FLOW SWITCH
			PRESSURE GAUGE WITH GAUGE COCK
			THERMOMETER
		RD / ORD	ROOF DRAIN / OVERFLOW DRAIN
		FD	FLOOR DRAIN
		FS	FLOOR SINK
			T & P RELIEF VALVE
			STRAINER
		CO	END OF LINE CLEANOUT
		FCO	FLOOR CLEANOUT
		WCO	WALL CLEANOUT
			CAP
			FLEXIBLE CONNECTION
			NEW CONNECTION TO EXISTING PIPING

NOTES:

1. NOT ALL SYMBOLS MAY BE USED ON THESE DRAWINGS.

PLUMBING PIPE MATERIAL SCHEDULE

PIPING SYSTEM	BELOW GRADE	ABOVE GRADE
STORM WASTE	SCH 40 PVC	CAST IRON
SANITARY WASTE	SCH 40 PVC	CAST IRON
DOMESTIC WATER	TYPE 'K' COPPER	TYPE 'L' COPPER
NATURAL GAS	POLYETHYLENE W/ SLEEVE UNDER SLAB	SCH 40 BLACK STEEL
FIRE PROTECTION	SCH 40 BLACK STEEL	SCH 40 BLACK STEEL

DRAWING REFERENCE KEY

RE:01/P-401

- REFER TO
- DETAIL NUMBER
- SHEET NUMBER

WATER HAMMER ARRESTOR SCHEDULE

PIPE SIZE	CROSS FIXTURE UNITS	PDI STD.
1/2"	1-11	"A"
3/4"	12-32	"B"
1"	33-60	"C"
1-1/4"	61-113	"D"
1-1/2"	114-154	"E"
2"	155-330	"F"

NOTES:

1. ASSE 1010 WATER HAMMER ARRESTORS SHALL BE PROVIDED TO ALL FIXTURE RUNOUT AND SHALL BE SIZED ACCORDING TO LOCAL PLUMBING CODE (AHJ) & PDI. WATER HAMMER ARRESTORS SHALL BE SIZED AND INSTALLED PER MANUFACTURER'S REQUIREMENTS. THE DEVICE SHALL HAVE LIFETIME WARRANTY AND BE INSTALLED WITHOUT REQUIRING ACCESS DOORS AND PANELS.

HORIZONTAL DRAIN PIPE SLOPE (UPC)

PIPE SIZE	MINIMUM SLOPE
STORM WASTE DRAINAGE	1/8" PER FOOT (1%)
SANITARY WASTE DRAINAGE	1/4" PER FOOT (2%)
GREASE WASTE DRAINAGE	1/4" PER FOOT (2%)

NOTES:

1. SANITARY WASTE DRAINAGE SLOPES SHALL APPLY TO ANY NON-SPECIFIED DRAINAGE PIPING SYSTEMS (E.G., CHEMICAL WASTE, ETC.) OR AS PER CODE REQUIREMENTS.

FIRE PROTECTION GENERAL NOTES

A. ALL FIRE SPRINKLER HEADS/PIPING/EQUIPMENT NOTED ON THE DRAWINGS "TO REMAIN' SHALL BE FIELD VERIFIED OF THEIR EXACT LOCATIONS BY THE FIRE SPRINKLER CONTRACTOR PRIOR TO COMMENCING ANY WORK.

B. ALL EXISTING FIRE PROTECTION SYSTEMS NOTED ON THE DRAWINGS "TO REMAIN" SHALL REMAIN IN OPERATION DURING ALL PHASES OF CONSTRUCTION. NO SYSTEMS ARE TO BE SHUTDOWN WITHOUT AUTHORIZATION FROM THE OWNER AND LOCAL FIRE DISTRICT.

C. ALL AREAS OF THE BUILDING(S) SHALL BE FULLY SPRINKLERED IN ACCORDANCE WITH SPECIFICATIONS AND CODE REQUIREMENTS.

D. SPRINKLER SYSTEM SHALL BE DESIGNED AND INSTALLED BY A STATE LICENSED FIRE PROTECTION CONTRACTOR IN ACCORDANCE WITH ALL LOCAL, STATE, JURISDICTIONAL, GOVERNMENTAL AGENCIES AND NFPA 13 (LATEST ADDITION). SPRINKLER SYSTEM MUST ALSO BE APPROVED BY OWNER AND OWNER'S FIRE INSURANCE UNDERWRITER.

E. SHOP DRAWINGS AND CALCULATIONS SHALL BE SUBMITTED BY THE CONTRACTOR FOR ENGINEER, OWNER, OWNER'S FIRE INSURANCE UNDERWRITER, AND FIRE MARSHALL'S APPROVAL.

F. THE LOCATION OF FIRE SPRINKLER HEADS SHALL BE COORDINATED WITH THE NEW CEILING LAYOUTS AND ALL OTHER TRADES FOR COMPLETE FIRE PROTECTION COVERAGE OF ALL AREAS. PROVIDE SHOP DRAWINGS FOR APPROVAL PRIOR TO INSTALLATION.

G. HEADS SHALL BE SYMMETRICALLY LOCATED IN CENTER OF CEILING PANELS. PROVIDE PENDENT AND/OR UPRIGHT TYPE SPRINKLER HEAD WHERE REQUIRED. CONTRACTOR SHALL COORDINATE WITH ARCHITECT THE LOCATIONS OF THE SPRINKLER HEADS PRIOR TO INSTALLATION. COORDINATE LAYOUT WITH CEILING OR SOFFIT LIGHT FIXTURES, HVAC DIFFUSERS, RETURNS, ETC.

H. CONTRACTOR TO DESIGN SPRINKLER SYSTEM AS REQUIRED TO ACCOMODATE NEW FIXTURES, PARTITIONS, SOFFITS, FURR DOWNS, CEILING HEIGHTS, ETC.

I. FLOW AND TAMPER SWITCHES ARE TO BE PROVIDED ON THE FIRE SPRINKLER SYSTEM. ALL ELECTRICAL WIRING TO BE PROVIDED BY ELECTRICAL CONTRACTOR.

J. LOCATE INSPECTOR TEST DRAIN(S) AT EXTERIOR WALL AND AWAY FROM FOOT TRAFFIC AND FRONT ENTRY AREAS IN COORDINATION WITH THE ARCHITECTURAL PLANS AND BUILDING CONDITIONS PRIOR TO FINAL INSTALL.

K. CONTRACTOR SHALL COORDINATE WITH ARCHITECT'S PLANS, WHERE APPLICABLE, TO PROVIDE INTERIOR CLASS I STANDPIPE TYPE 2.5" HOSE VALVES PLACED STRATEGICALLY IN BUILDING AREAS MOST AFFECTED BY INCREASED EXIT TRAVEL DISTANCE, TO GIVE RESPONDING FIRE DEPARTMENT ACCESS TO WATER SUPPLY DEEP INTO THE BUILDING'S INTERIOR, AND REDUCE INTERIOR HOSE LENGTHS TO 250 FT.

L. THE FIRE RISER AND/OR FIRE PUMP ROOM LAYOUT REQUIREMENTS NOTED ON THESE PLANS SHALL BE ADHERED TO AS CLOSELY AS POSSIBLE BUT SHALL NOT SUPERSEDE CODE CONSTRAINTS AND/OR REQUIREMENTS OF AUTHORITIES HAVING JURISDICTION. WHERE CODE OR AHJ REQUIREMENTS SUPERSEDE ITEMS SHOWN ON THIS PLAN, CONTRACTOR SHALL INCLUDE ALL ASSOCIATED PROVISIONS IN THE BID, AND SHALL MAKE THEM AT NO ADDITIONAL COST TO THE OWNER. PROPOSED DEVIATIONS FROM THIS PLAN SHALL BE SUBJECT TO THE ARCHITECT'S AND ENGINEER'S REVIEW AND APPROVAL PRIOR TO IMPLEMENTATION.

M. REFER TO OWNER'S CRITERIA FOR ADDITIONAL INFORMATION.

N. REFER TO ARCHITECT FOR SPRINKLER SYSTEM DESIGN OCCUPANCY.

PROJECT GENERAL NOTES

A. ALL EQUIPMENT AND/OR SYSTEMS NOTED ON THE DRAWINGS "TO REMAIN" SHALL BE INSPECTED AND TESTED ON SITE TO CERTIFY WORKING CONDITION. A WRITTEN REPORT ON THE CONDITION OF ALL EQUIPMENT TO REMAIN, INCLUDING A COPY OF THE TEST RESULTS WITH RECOMMENDED REMEDIAL ACTIONS AND COSTS, SHALL BE MADE BY THIS CONTRACTOR TO THE ARCHITECT/ENGINEER FOR REVIEW.

B. THE PLUMBING WORK SHALL BE PERFORMED IN STRICT ACCORDANCE WITH THE LOCAL CODES AS WELL AS ALL LOCAL REGULATIONS THAT MAY APPLY. IN CASE OF CONFLICT BETWEEN THE CONTRACT DOCUMENTS AND A GOVERNING CODE OR ORDINANCE, THE MORE STRINGENT STANDARD SHALL APPLY.

C. THE PLUMBING WORK SHALL BE EXECUTED IN STRICT ACCORDANCE WITH THE PLUMBING SPECIFICATIONS. IN CASE OF CONFLICTS BETWEEN THE PLUMBING DRAWINGS AND THE PLUMBING SPECIFICATIONS, THE MORE EXPENSIVE OF THE TWO SHALL APPLY.

D. ALL PLUMBING WORK SHALL BE COORDINATED WITH ALL OTHER TRADES BEFORE PROCEEDING WITH THE INSTALLATION.

E. INVERT ELEVATIONS AND EXACT LOCATIONS OF ALL IMPACTED EXISTING UTILITIES SHALL BE CHECKED BEFORE PROCEEDING WITH NEW WORK.

F. NO CHANGES ARE TO BE MADE IN PLUMBING LAYOUT WITHOUT WRITTEN PERMISSION BY THE ARCHITECT OR ENGINEER.

G. NO PIPING SHALL RUN EXPOSED IN FINISHED AREAS.

H. ROUGH-IN DIMENSIONS OF ALL TOILET FIXTURES MUST BE COORDINATED WITH THE GENERAL CONTRACTOR. ROUGH-IN MOUNTING HEIGHTS OF ALL RESTROOM/SHOWER FIXTURES MUST BE COORDINATED WITH THE ARCHITECTURAL MOUNTING HEIGHTS GUIDELINES PRIOR TO INSTALLATION.

I. PROVIDE SHUT-OFF VALVES FOR WATER HEATER BRANCH. PROVIDE DIELECTRIC FITTINGS OR COUPLINGS WHEREVER DISSIMILAR METALS ARE IN CONTACT.

J. PROVIDE SHUT-OFF VALVES AT EACH FIXTURE AND AT EACH FLOOR (IF FIXTURES ARE STACKED) ON HOT AND COLD WATER SUPPLY PIPES. PROVIDE HOT WATER RETURN BALANCING VALVE WITH SHUT-OFF VALVE ON HOT WATER RETURN PIPES AT THE END OF A LOOPED HOT WATER BRANCH. LOCATE HOT WATER SHUT-OFF VALVE(S) TO NOT IMPEDE THE HOT WATER RETURN SYSTEM.

K. ALL ACCESS PANELS SHALL BE BY GENERAL CONTRACTOR. PLUMBING CONTRACTOR SHALL BE RESPONSIBLE FOR THEIR LOCATION.

L. INSTALL ALL REQUIRED CLEANOUTS TO CLEAR EQUIPMENT AND FIXTURES.

M. ALL WORK SHALL BE PROPERLY TESTED, BALANCED, CLEANED AND DISINFECTED. PROVIDE A ONE YEAR WARRANTY FROM DATE OF SUBSTANTIAL COMPLETION ON ALL PARTS AND LABOR.

N. ALL PLUMBING FIXTURES SPECIFIED ARE FOR INFORMATION ONLY. EQUAL EQUIPMENT MAY BE INSTALLED SECURING FIRST THE ENGINEER'S APPROVAL.

O. PITCH ALL WASTE AND SOIL PIPING AT MAXIMUM SLOPE POSSIBLE, BUT NOT LESS THAN AS REQUIRED PER THE APPLICABLE LOCAL CODES. PITCH ALL GREASE WASTE PIPING AT A MINIMUM OF 1/4" PER FOOT AS REQUIRED PER THE APPLICABLE LOCAL CODES.

P. PROVIDE ALL PIPE OPENINGS THROUGH PARTITIONS WITH PIPE SLEEVES. WHERE PENETRATING FIRE RATED PARTITIONS, THE SPACE BETWEEN THE PIPE AND THE SLEEVE SHALL BE SEALED WITH FIRE STOPPING MATERIAL.

Q. ANY UNAUTHORIZED CHANGES TO THE EQUIPMENT, DESIGN OR INSTALLATION OF THE PLUMBING SYSTEMS WITHOUT THE EXPRESSED WRITTEN CONSENT OF THE ENGINEER IS UNACCEPTABLE AND GROUNDS FOR REMOVAL OF ALL LIABILITY OF THE ARCHITECT/ENGINEER FOR THE REVISED DESIGN.

R. PROVIDE CONDENSATE DRAIN FROM ROOF MOUNTED EQUIPMENT TO OPEN SITE DRAIN OR AS SHOWN ON DRAWINGS.

S. ALL PIPING MATERIAL SHALL BE OF DOMESTIC MANUFACTURE AND SHALL COMPLY WITH THE BUY AMERICAN ACT.

PLUMBING TESTING NOTES

1. ALL EQUIPMENT AND/OR SYSTEMS NOTED ON THE DRAWINGS "TO REMAIN" SHALL BE INSPECTED AND TESTED ON SITE TO CERTIFY WORKING CONDITION. A WRITTEN REPORT ON THE CONDITION OF ALL EQUIPMENT TO REMAIN, INCLUDING A COPY OF THE TEST RESULTS WITH RECOMMENDED REMEDIAL ACTIONS AND COSTS SHALL BE MADE BY THIS CONTRACTOR TO THE ARCHITECT/ENGINEER FOR REVIEW.
2. PIPE COVER AND BACKFILLING:
   A. AFTER HYDROSTATIC TEST, EVENLY BACKFILL ENTIRE TRENCH WIDTH BY HAND PLACING BACKFILL MATERIAL AND HAND TAMPING IN FOUR (4) INCHES COMPACTED LAYERS TO TWELVE (12) INCHES MINIMUM COVER OVER TOP OF JACKET. COMPACT TO 95 PERCENT MAXIMUM DENSITY.
   B. EVENLY AND CONTINUOUSLY BACKFILL REMAINING TRENCH DEPTH IN UNIFORM LAYERS WITH BACKFILL MATERIAL.
   C. DO NOT USE WHEELED OR TRACKED VEHICLES FOR TAMPING.
3. PRESSURE TEST ALL DOMESTIC WATER PIPING. AFTER INSTALLATION AND PRIOR TO BACKFILL OR COVER-UP, RINSE PIPING SYSTEM OF PARTICULATE CONTAMINANTS, CAP AND SUBJECT TO STATIC WATER PRESSURE OF 125 PSIG FOR FOUR (4) HOURS. REPAIR LEAKS AND DEFECTS AND RE-TEST ANY PORTION OF PIPING SYSTEM THAT FAILS. PROVIDE WRITTEN TEST REPORT INCLUDING DATE AND TIME OF TEST, PASS OR FAIL INDICATION, SUMMARY OF REMEDIAL WORK REQUIRED AND DATE AND TIME OF EACH RE-TEST.
4. PRIOR TO COVER UP, WATER PIPE, SANITARY PIPE, AND GAS PIPING SHALL BE PRESSURE TESTED. TESTS SHALL BE WITNESSED BY CONSULTANT AND OWNER. NOTIFY OWNER 48 HOURS PRIOR TO TEST. TEST SHALL BE WITNESSED BY CLIENT PLUMBING TECHNICIAN.
5. UPON COMPLETION OF THE SANITARY PIPING SYSTEM, THE CONTRACTOR SHALL NOTIFY ENGINEER AND OWNER TO OBSERVE A SMOKE TEST OF THE SYSTEM. SMOKE TESTING SHALL BE PERFORMED ON SANITARY PIPING SYSTEM TWICE DURING CONSTRUCTION.
6. ALL WASTE PIPING SYSTEMS:
   A. WATER TEST SHALL BE APPLIED TO THESE DRAINAGE SYSTEMS EITHER IN THEIR ENTIRETY OR IN SECTIONS AS REQUIRED, AFTER ROUGH PIPING HAS BEEN INSTALLED. IF THE SYSTEM IS TESTED IN SECTIONS, EACH OPENING SHALL BE TIGHTLY CLOSED EXCEPT THE HIGHEST OPENING IN THE SECTION UNDER TEST. ALL SECTIONS SHALL BE TESTED WITH A MINIMUM OF 10 FEET HEAD OF WATER. IN TESTING SUCCESSIVE SECTIONS AT LEAST THE UPPER 10 FEET OF THE NEXT PRECEDING SECTION SHALL BE TESTED SO THAT NO JOINT OF PIPING IN THE BUILDING EXCEPT THE UPPERMOST 10 FEET OF THE SYSTEM SHALL BE SUBMITTED TO A TEST OF LESS THAN 10 FOOT OF HEAD OF WATER. THE WATER SHALL BE KEPT IN THE SYSTEM FOR AT LEAST 30 MINUTES BEFORE INSPECTION STARTS; THE SYSTEM SHALL THEN BE MADE TIGHT AT ALL POINTS.
   B. ANY POINTS OF THE DRAINAGE SYSTEMS TO BE TESTED WITH AIR INSTEAD OF WATER SHALL BE MADE BY ATTACHING AN AIR COMPRESSOR TESTING APPARATUS TO ANY SUITABLE OPENING AND AFTER CLOSING ALL OTHER INLETS OR OUTLETS, FORCING AIR INTO THE SYSTEM UNTIL THERE IS A MINIMUM GAUGE PRESSURE OF 5 PSI. THIS PRESSURE SHALL BE HELD WITHOUT THE INTRODUCTION OF ADDITIONAL AIR FOR A PERIOD OF AT LEAST 30 MINUTES.
   C. EXTERIOR CONNECTIONS SHALL BE TESTED AS PART OF THE INTERIOR SYSTEMS.
7. ADDITIONAL TESTS:
   A. PROVIDE ALL ADDITIONAL TESTS SUCH AS SMOKE OR PRESSURE TESTS AS REQUIRED BY THE REGULATIONS OR AS DIRECTED BY AUTHORITIES MAKING THE INSPECTION. CONTRACTOR SHALL COORDINATE SAID ADDITIONAL TESTS WITH ANY THIRD-PARTY TESTING ENTITIES AS REQUIRED.
   B. PROVIDE FOR ANY REPEATED TEST AS DIRECTED BY THE OWNER'S REPRESENTATIVE, TO MAKE ALL SYSTEMS TIGHT AS REQUIRED.
   C. VISUAL INSPECTIONS OF JOINTS, VALVES, ETC. SHALL BE MADE AS DIRECTED BY THE ENGINEER.
   D. PRESSURE TEST NATURAL GAS PIPING IN ACCORDANCE WITH NFPA 54. PRESSURE TEST PRIOR TO BACKFILL, MINIMUM 50 PSI FOR 24 HOURS.

PBK
www.pbk.com
TX FIRM: BR 1608
HOUSTON, TX
713-965-0608

LEAF ENGINEERS

PKG 3A - GPHS NEW FIELDHOUSE

1000 Keene St.
Galena Park, TX 77547

CLIENT PROJECT NO: 240539

ISSUE FOR PROPOSAL

Galena Park ISD

STATE OF TEXAS
DONALD C. RICHARDS
61522
LICENSED
PROFESSIONAL ENGINEER
June 10, 2025
LEAF ENGINEERS
F-16672

CLIENT	
Galena Park ISD	
DATE: June 10, 2025	PROJECT NUMBER: 240539

DRAWING HISTORY

No.	Description	Date

CHECKED BY: AA
DRAWN BY: AA/TN

PLUMBING COVER SHEET

P-000

Plot Stamp:
6/6/2025 11:33:23 AM

PLUMBING SITE PLAN
PS-101
FOR BLUEBEAM LABELING/OCR:

0"
1"

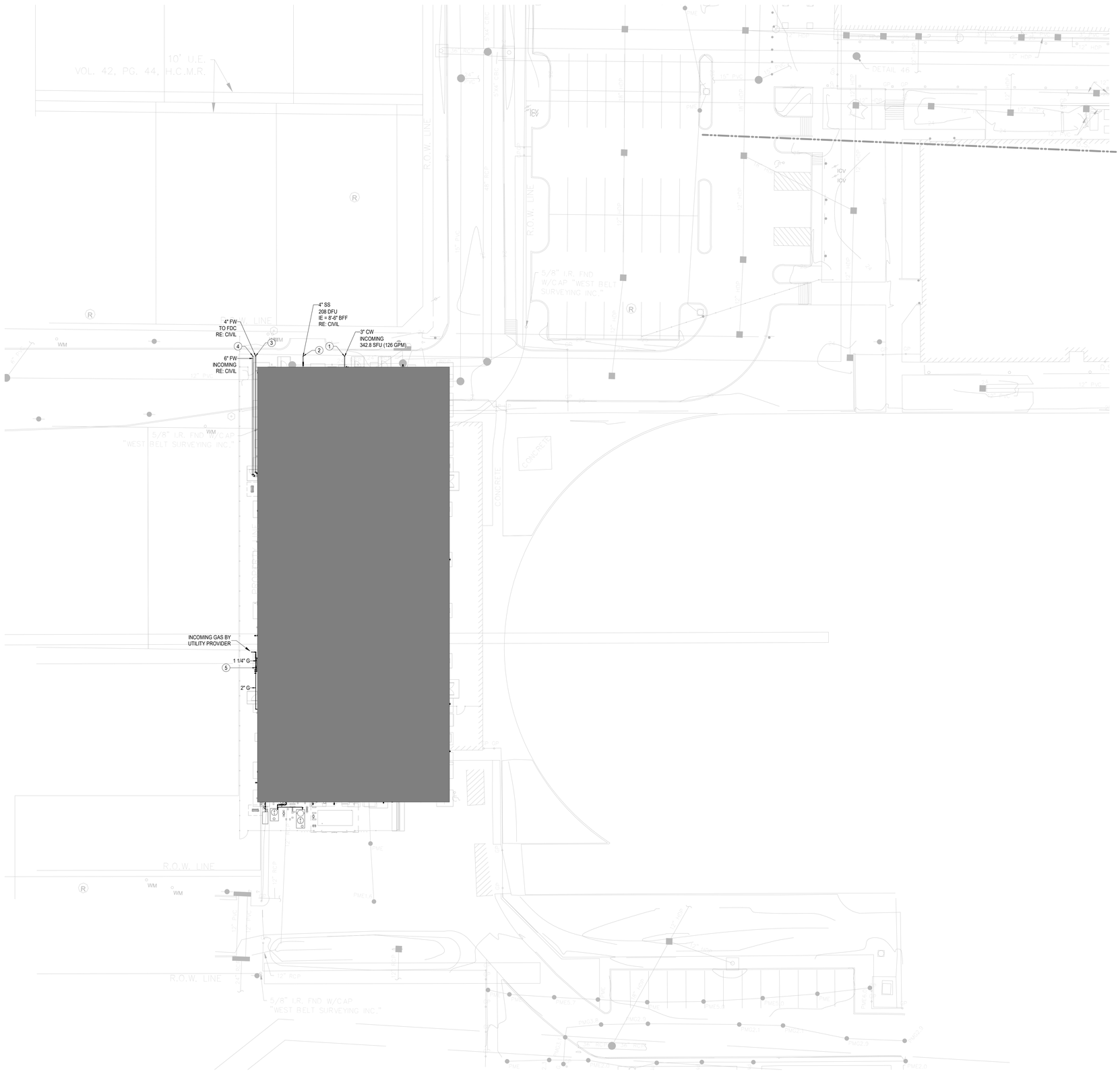

1 **PLUMBING SITE PLAN**
SCALE: 1" = 20'-0"

GENERAL NOTES - PLUMBING PLAN

A. THE CONTRACTOR SHALL COMPLY WITH ALL AUTHORITIES HAVING JURISDICTION.

B. ALL FINAL CONNECTIONS TO FIXTURES AND EQUIPMENT SHALL BE MADE BY THE PLUMBING CONTRACTOR.

C. ALL PLUMBING PIPING SHALL BE COORDINATED WITH ALL OTHER TRADES PRIOR TO ANY INSTALLATION OF ALL PLUMBING FIXTURES AND EQUIPMENT BY THE PLUMBING CONTRACTOR.

D. ALL FLOOR DRAINS AND FLOOR SINKS SHOWN ON THIS DRAWING SHALL BE COORDINATED WITH ALL OTHER TRADES PRIOR TO INSTALLATION.

E. REFER TO ARCHITECTURAL DRAWING FOR EXACT LOCATIONS OF FIXTURES, EQUIPMENT, ETC. DO NOT SCALE FROM PLUMBING DRAWINGS.

F. ALL WALL CLEAN-OUTS SHALL BE ACCESSIBLE BY AN ACCESS PANEL.

G. PROVIDE AND INSTALL A DOUBLE EXTERIOR CLEAN-OUT (DFCO) ON ALL SANITARY LINES EXITING THE BUILDING.

H. ALL FLOOR DRAINS AND FLOOR SINKS SHALL BE PROVIDED WITH A TRAP PRIMER AND INSTALLED BY THE PLUMBING CONTRACTOR.

I. FIXTURES DESIGNATED AS ADA ACCESSIBLE BY ARCHITECT SHALL BE INSTALLED AT ADA ACCESSIBLE HEIGHT PER ARCHITECTURAL DETAILS.

J. ALL DOMESTIC COLD AND HOT WATER TAKE-OFFS SHALL HAVE AN ISOLATION SHUT-OFF VALVE.

K. FLOOR DRAINS AND FLOOR SINKS IN MECHANICAL ROOMS SHALL BE SET NOT LESS THAN 6" FROM HOUSEKEEPING PADS. RE: MECHANICAL DRAWINGS. DO NOT PLACE ON, OR IN, HOUSEKEEPING PAD, OR UNDERNEATH EQUIPMENT.

L. CONTRACTOR SHALL DEWATER ANY AREA AT OR BELOW GRADE PRIOR TO SETTING EQUIPMENT.

M. CONTRACTOR SHALL PROVIDE AND INSTALL A TRAP PRIMER, TP-1, AND A HOSE BIBB, HB-3, IN ALL MECHANICAL ROOMS.

N. CONTRACTOR SHALL PROVIDE AND INSTALL A HOSE BIBB WITH WHEEL HANDLE IN ALL MECHANICAL ROOMS, HB-3.

O. ANY AND ALL WATER PIPING EXPOSED TO OUTSIDE ELEMENTS SHALL BE INSULATED AND HEAT TRACED TO PREVENT FREEZING.

P. ALL SANITARY 3" OR ABOVE SHALL BE INSPECTED BY A CAMERA PRIOR TO SUBSTANTIAL COMPLETION.

Q. ALL RVB-1 SHALL HAVE FILTER.

KEYNOTES - PLUMBING PLAN

1 INCOMING 3" COLD WATER ENTRY.

2 4" SANITARY WASTE, I.E. AS NOTED ON PLAN, RE: CIVIL DRAWING FOR CONTINUATION.

3 4" FIRE LINE FROM FIRE DEPARTMENT CONNECTION, RE: CIVIL PLAN FOR EXACT LOCATION.

4 INCOMING 6" FIRE LINE ENTRY.

5 NEW GAS METER PROVIDED BY UTILITY PROVIDER.

PBK
www.pbk.com
TX FIRM: BR 1608
HOUSTON, TX
713-365-0608

LEAF ENGINEERS

PKG 3A - GPHS NEW FIELDHOUSE

1000 Keene St.
Galena Park, TX 77547

CLIENT PROJECT NO: 240539

ISSUE FOR PROPOSAL

Galena Park ISD
GP
FOCUS ON WHAT'S ALL FOR ALL KIDS

KEY PLAN
NORTH: PLAN TRUE

STATE OF TEXAS
DONALD C. RICHARDS
61522
LICENSED
PROFESSIONAL ENGINEER
June 10, 2025
LEAF ENGINEERS
F-16672

CLIENT	
Galena Park ISD	
DATE: June 10, 2025	PROJECT NUMBER: 240539

DRAWING HISTORY

No.	Description	Date

CHECKED BY: AA
DRAWN BY: AA/TN

PLUMBING SITE PLAN

PS-101

Plot Stamp:
6/6/2025 11:33:26 AM

1ST FLOOR PLUMBING UNDERFLOOR PLAN
PU-101
FOR BLUEBEAM LABELING/OCR:

0"
1"

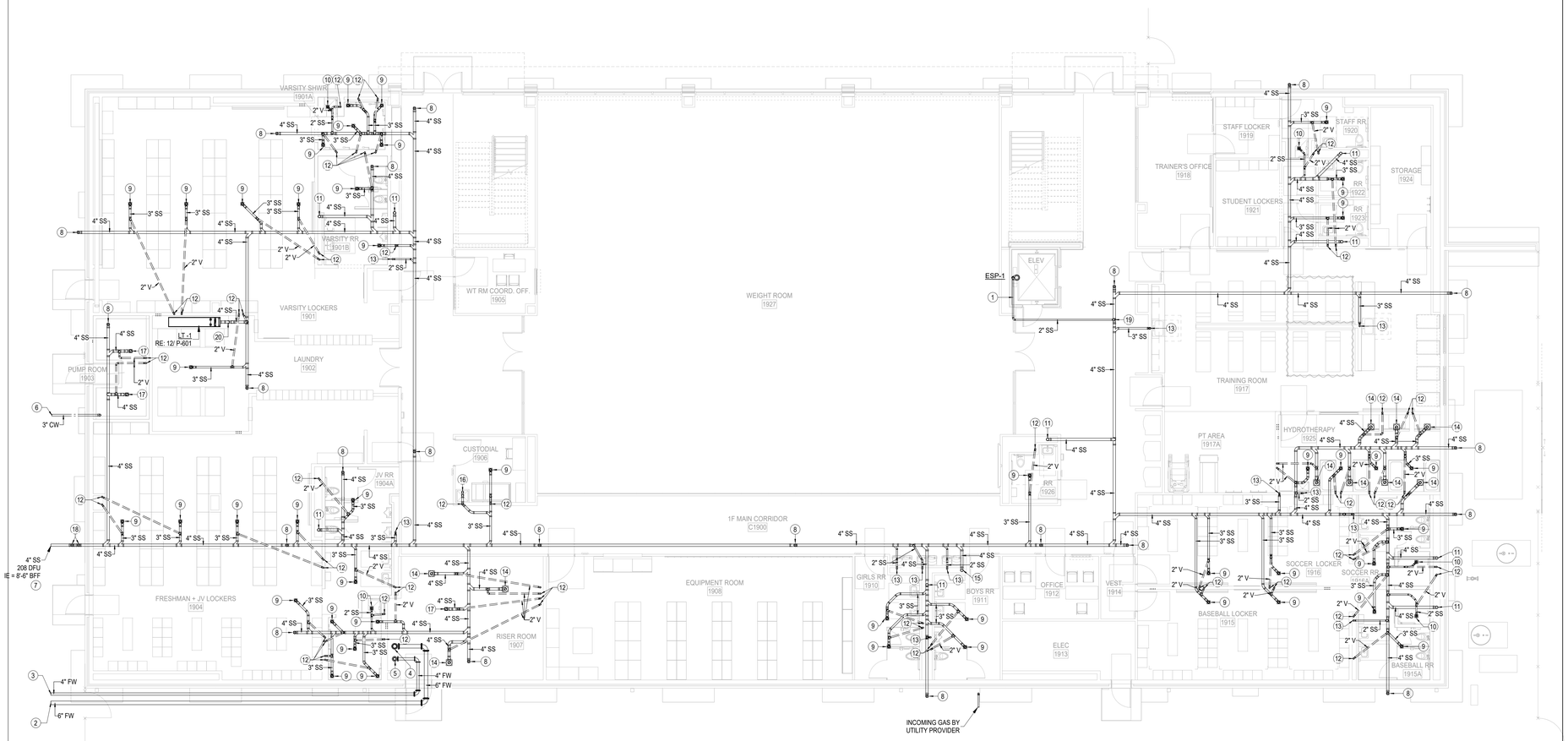

1 1ST FLOOR PLUMBING UNDERFLOOR PLAN
SCALE: 1/8" = 1'-0"

GENERAL NOTES - PLUMBING PLAN

A. THE CONTRACTOR SHALL COMPLY WITH ALL AUTHORITIES HAVING JURISDICTION.

B. ALL FINAL CONNECTIONS TO FIXTURES AND EQUIPMENT SHALL BE MADE BY THE PLUMBING CONTRACTOR.

C. ALL PLUMBING PIPING SHALL BE COORDINATED WITH ALL OTHER TRADES PRIOR TO ANY INSTALLATION OF ALL PLUMBING FIXTURES AND EQUIPMENT BY THE PLUMBING CONTRACTOR.

D. ALL FLOOR DRAINS AND FLOOR SINKS SHOWN ON THIS DRAWING SHALL BE COORDINATED WITH ALL OTHER TRADES PRIOR TO INSTALLATION.

E. REFER TO ARCHITECTURAL DRAWING FOR EXACT LOCATIONS OF FIXTURES, EQUIPMENT, ETC. DO NOT SCALE FROM PLUMBING DRAWINGS.

F. ALL WALL CLEAN-OUTS SHALL BE ACCESSIBLE BY AN ACCESS PANEL.

G. PROVIDE AND INSTALL A DOUBLE EXTERIOR CLEAN-OUT (DFCO) ON ALL SANITARY LINES EXITING THE BUILDING.

H. ALL FLOOR DRAINS AND FLOOR SINKS SHALL BE PROVIDED WITH A TRAP PRIMER AND INSTALLED BY THE PLUMBING CONTRACTOR.

I. FIXTURES DESIGNATED AS ADA ACCESSIBLE BY ARCHITECT SHALL BE INSTALLED AT ADA ACCESSIBLE HEIGHT PER ARCHITECTURAL DETAILS.

J. ALL DOMESTIC COLD AND HOT WATER TAKE-OFFS SHALL HAVE AN ISOLATION SHUT-OFF VALVE.

K. FLOOR DRAINS AND FLOOR SINKS IN MECHANICAL ROOMS SHALL BE SET NOT LESS THAN 6" FROM HOUSEKEEPING PADS. RE: MECHANICAL DRAWINGS. DO NOT PLACE ON, OR IN, HOUSEKEEPING PAD, OR UNDERNEATH EQUIPMENT.

L. CONTRACTOR SHALL DEWATER ANY AREA AT OR BELOW GRADE PRIOR TO SETTING EQUIPMENT.

M. CONTRACTOR SHALL PROVIDE AND INSTALL A TRAP PRIMER, TP-1, AND A HOSE BIBB, HB-3, IN ALL MECHANICAL ROOMS.

N. CONTRACTOR SHALL PROVIDE AND INSTALL A HOSE BIBB WITH WHEEL HANDLE IN ALL MECHANICAL ROOMS, HB-3.

O. ANY AND ALL WATER PIPING EXPOSED TO OUTSIDE ELEMENTS SHALL BE INSULATED AND HEAT TRACED TO PREVENT FREEZING.

P. ALL SANITARY 3" OR ABOVE SHALL BE INSPECTED BY A CAMERA PRIOR TO SUBSTANTIAL COMPLETION.

Q. ALL RVB-1 SHALL HAVE FILTER.

KEYNOTES - PLUMBING PLAN

1 FORCED MAIN PIPING IS TYPE K COPPER, HARD DRAWN.

2 INCOMING 6" FIRE LINE ENTRY. RE: CIVIL DRAWING FOR CONTINUATION.

3 4" FIRE LINE TO REMOTE SIAMESE FIRE DEPARTMENT CONNECTION. RE: CIVIL DRAWING FOR CONTINUATION.

4 6" FIRE LINE UP.

5 4" FIRE LINE UP.

6 INCOMING 3" COLD WATER ENTRY. RE: CIVIL DRAWING FOR CONTINUATION.

7 4" SANITARY WASTE. RE: CIVIL DRAWING FOR CONTINUATION.

8 4" WASTE DOWN FROM FLOOR CLEANOUT.

9 3" WASTE DOWN FROM FLOOR DRAIN, PROVIDE TRAP PRIMER.

10 2" WASTE DOWN FROM SHOWER DRAIN.

11 4" WASTE DOWN.

12 2" VENT UP.

13 2" WASTE DOWN.

14 4" WASTE DOWN FROM FLOOR SINK, PROVIDE TRAP PRIMER.

15 4" WASTE DOWN FROM ABOVE.

16 3" WASTE DOWN FROM MOP SINK, PROVIDE TRAP PRIMER.

17 4" WASTE DOWN FROM FLOOR DRAIN, PROVIDE TRAP PRIMER.

18 4" WASTE DOWN FROM DOUBLE EXTERIOR CLEANOUT TO GRADE.

19 PROVIDE NON-CONDUCTING DIELECTRIC ADAPTOR BETWEEN COPPER AND PVC CONNECTION.

20 4" DRAIN DOWN FROM ABOVE, PROVIDE TRAP PRIMER.

PBK
www.pbk.com
TX FIRM: BR 1608
HOUSTON, TX
713-365-0608

LEAF ENGINEERS

PKG 3A - GPHS NEW FIELDHOUSE

1000 Keene St.
Galena Park, TX 77547

CLIENT PROJECT NO: 240539

ISSUE FOR PROPOSAL

Galena Park ISD
GP
BUILDING REAL FOR REAL LIFE

KEY PLAN
NORTH: PLAN TRUE

STATE OF TEXAS
DONALD C. RICHARDS
61525
PROFESSIONAL ENGINEER
June 10, 2025
LEAF ENGINEERS
F-18672

CLIENT	
Galena Park ISD	
DATE: June 10, 2025	PROJECT NUMBER: 240539

DRAWING HISTORY

No.	Description	Date

CHECKED BY: AA
DRAWN BY: AA/TN

1ST FLOOR PLUMBING UNDERFLOOR PLAN

PU-101

Plot Stamp:
6/6/2025 11:33:28 AM

1ST FLOOR PLUMBING PLAN
P-101

FOR BLUEBEAM LABELING/OCR:

0"
1"

KEYNOTES - PLUMBING PLAN

1 6" WASTE DOWN FROM BREAK TANK OVERFLOW DRAIN PIT (2' X 4' X 2' WITH 1' CURB AFF). PROVIDE TRAP PRIMER. REFER TO THE PLUMBING DETAILS FOR ADDITIONAL INFORMATION.

2 2" WASTE DOWN FROM ABOVE.

3 4" WASTE DOWN.

4 2" WASTE DOWN, 2" VENT UP FROM PLUMBING FIXTURE, 3/4" HOT AND COLD WATER DOWN TO SERVE PLUMBING FIXTURE.

5 2" VENT UP.

6 4" WASTE DOWN FROM FLOOR CLEANOUT.

7 2" WASTE DOWN FROM SHOWER DRAIN.

8 3" WASTE DOWN FROM FLOOR DRAIN. PROVIDE TRAP PRIMER.

9 4" WASTE DOWN FROM ABOVE.

10 2" WASTE DOWN AND 2" VENT UP FROM PLUMBING FIXTURE(S), 1" COLD WATER DOWN TO SERVE PLUMBING FIXTURE(S).

11 4" WASTE DOWN AND 2" VENT UP FROM PLUMBING FIXTURE(S), 1-1/4" COLD WATER DOWN TO SERVE PLUMBING FIXTURE(S).

12 3" WASTE DOWN AND 2" VENT UP FROM PLUMBING FIXTURE(S), 3/4" HOT AND COLD WATER DOWN TO SERVE PLUMBING FIXTURE(S).

KEYNOTES - PLUMBING PLAN

13 2" WASTE DOWN.

14 2" VENT UP FROM BELOW.

15 3/4" HOT WATER RETURN BALANCING VALVE (CONFIRM/ADJUST SETPOINT OF EACH INDIVIDUAL BALANCING VALVE TO FLOW MINIMUM OF 0.5 GPM AND ADJUST AS REQUIRED TO PROVIDE PROPER/NECESSARY BALANCING).

16 DOMESTIC GAS WATER HEATER AND CONCENTRIC VENT KIT SHALL BE PROVIDED BY PLUMBING CONTRACTOR. REFER TO PLUMBING DRAWINGS AND SPECIFICATIONS. PROVIDE 2" THICK, INSTALLED R-8, FIBERGLASS INSULATION FOR METAL INTAKE PIPING FOR CONDENSATION PREVENTION. REFER TO PLUMBING DETAILS FOR SEALED COMBUSTION CONCENTRIC VENT DETAIL. PROVIDE 4" WATER HEATER CONCENTRIC FLUE CAP (x2) AT EXTERIOR PENETRATION. CONTRACTOR SHALL REFER TO MANUFACTURER'S REQUIREMENTS FOR EXACT INSTALLATION NEEDS PRIOR TO COMMENCING ANY INSTALL WORK.

17 FIRE PUMP CONTROLLER PANEL.

18 JOCKEY PUMP CONTROLLER PANEL.

19 BYPASS VALVE (NORMALLY CLOSED).

20 3/4" COLD WATER DOWN TO SERVE CHEMICAL DISPENSING UNIT (FURNISHED BY OTHERS). CONTRACTOR SHALL PROVIDE LOCAL AHJ-APPROVED METHOD OF BACKFLOW PROTECTION AS REQUIRED FOR THE UNIT, REFER TO UNIT INSTALLATION REQUIREMENTS FOR ADDITIONAL INFORMATION.

21 DOMESTIC WATER PUMP, REFER TO PLUMBING EQUIPMENT SCHEDULES. COORDINATE EXACT LOCATION WITH OTHER EQUIPMENT TO MAINTAIN MANUFACTURER-REQUIRED CLEARANCES.

KEYNOTES - PLUMBING PLAN

22 FIRE PUMP, REFER TO PLUMBING EQUIPMENT SCHEDULES. COORDINATE EXACT LOCATION WITH OTHER EQUIPMENT TO MAINTAIN MANUFACTURER-REQUIRED CLEARANCES. MANUFACTURER SHALL PROVIDE WIRING FROM FIRE PUMP CONTROLLER TO FIRE PUMP.

23 JOCKEY PUMP, REFER TO PLUMBING EQUIPMENT SCHEDULES. COORDINATE EXACT LOCATION WITH OTHER EQUIPMENT TO MAINTAIN MANUFACTURER-REQUIRED CLEARANCES.

24 PROVIDE REGULATOR (STEP DOWN FROM 5 PSI TO 7"-14" W.C.) W/ SHUT-OFF VALVE ON EACH SIDE. CONTRACTOR SHALL COORDINATE EXACT EQUIPMENT INLET SIZE AND PRESSURE REQUIREMENTS PRIOR TO INSTALL. INDOOR GAS REGULATORS SHALL BE VENTED TO EXTERIOR AS REQUIRED.

25 3/4" COLD WATER DOWN TO WALL HYDRANT.

26 3/4" COLD WATER DOWN TO ICE MAKER WALL BOX.

27 3/4" COLD WATER DOWN TO HOSE BIBB.

28 3" VENT UP.

29 PROVIDE REGULATOR (STEP DOWN FROM 5 PSI TO 7"-14" W.C.) W/ SHUT-OFF VALVE ON EACH SIDE. CONTRACTOR SHALL COORDINATE EXACT EQUIPMENT INLET SIZE AND PRESSURE REQUIREMENTS PRIOR TO INSTALL.

30 EXTEND 1-1/2" COLD WATER MAKE-UP LINE TO SERVE MECHANICAL EQUIPMENT. REFER TO MECHANICAL DETAILS AND DRAWINGS FOR CONTINUATION/CONNECTION OF MAKE-UP WATER TO MECHANICAL EQUIPMENT.

31 3" COLD WATER UP.

KEYNOTES - PLUMBING PLAN

32 3/4" HOT AND COLD WATER DOWN TO WASHING MACHINE.

33 BREAK TANK, FIRE WATER BREAK TANK. 6" (x1) FIRE WATER FILL LINE FED FROM THE FIRE WATER FILL STATION. COORDINATE EXACT LOCATION WITH OTHER EQUIPMENT TO MAINTAIN MINIMUM MANUFACTURER-REQUIRED CLEARANCES.

34 1-1/4" GAS DOWN.

35 2" COLD WATER & 1-1/4" HOT WATER UP AND 3/4" HOT WATER RETURN DOWN FROM ABOVE.

36 1-1/4" COLD WATER & 1" HOT WATER UP AND 3/4" HOT WATER RETURN DOWN FROM ABOVE.

37 PROVIDE HEAT TRACING AT DOMESTIC COLD WATER LINE AND MAKE-UP WATER LINE AT THE UNCONDITION SPACE AND EXPOSED TO OUTSIDE CLIMATE.

38 3" WASTE DOWN FROM FLOOR SINK, PROVIDE TRAP PRIMER.

39 EYEWASH ARM SWIVEL RADIUS SHALL OPERATE FREE AND CLEAR OF ANY OBSTRUCTIONS. REFER TO MANUFACTURER INSTALLATION REQUIREMENTS FOR ADDITIONAL INFORMATION. THERMOSTATIC MIXING VALVE SHALL COMPLY WITH ASSE 1071.

GENERAL NOTES - PLUMBING PLAN

A. THE CONTRACTOR SHALL COMPLY WITH ALL AUTHORITIES HAVING JURISDICTION.

B. ALL FINAL CONNECTIONS TO FIXTURES AND EQUIPMENT SHALL BE MADE BY THE PLUMBING CONTRACTOR.

C. ALL PLUMBING PIPING SHALL BE COORDINATED WITH ALL OTHER TRADES PRIOR TO ANY INSTALLATION OF ALL PLUMBING FIXTURES AND EQUIPMENT BY THE PLUMBING CONTRACTOR.

D. ALL FLOOR DRAINS AND FLOOR SINKS SHOWN ON THIS DRAWING SHALL BE COORDINATED WITH ALL OTHER TRADES PRIOR TO INSTALLATION.

E. REFER TO ARCHITECTURAL DRAWING FOR EXACT LOCATIONS OF FIXTURES, EQUIPMENT, ETC. DO NOT SCALE FROM PLUMBING DRAWINGS.

F. ALL WALL CLEAN-OUTS SHALL BE ACCESSIBLE BY AN ACCESS PANEL.

G. PROVIDE AND INSTALL A DOUBLE EXTERIOR CLEAN-OUT (DFCO) ON ALL SANITARY LINES EXITING THE BUILDING.

H. ALL FLOOR DRAINS AND FLOOR SINKS SHALL BE PROVIDED WITH A TRAP PRIMER AND INSTALLED BY THE PLUMBING CONTRACTOR.

I. FIXTURES DESIGNATED AS ADA ACCESSIBLE BY ARCHITECT SHALL BE INSTALLED AT ADA ACCESSIBLE HEIGHT PER ARCHITECTURAL DETAILS.

GENERAL NOTES - PLUMBING PLAN

J. ALL DOMESTIC COLD AND HOT WATER TAKE-OFFS SHALL HAVE AN ISOLATION SHUT-OFF VALVE.

K. FLOOR DRAINS AND FLOOR SINKS IN MECHANICAL ROOMS SHALL BE SET NOT LESS THAN 6" FROM HOUSEKEEPING PADS. RE: MECHANICAL DRAWINGS. DO NOT PLACE ON, OR IN, HOUSEKEEPING PAD, OR UNDERNEATH EQUIPMENT.

L. CONTRACTOR SHALL DEWATER ANY AREA AT OR BELOW GRADE PRIOR TO SETTING EQUIPMENT.

M. CONTRACTOR SHALL PROVIDE AND INSTALL A TRAP PRIMER, TP-1, AND A HOSE BIBB, HB-3, IN ALL MECHANICAL ROOMS.

N. CONTRACTOR SHALL PROVIDE AND INSTALL A HOSE BIBB WITH WHEEL HANDLE IN ALL MECHANICAL ROOMS, HB-3.

O. ANY AND ALL WATER PIPING EXPOSED TO OUTSIDE ELEMENTS SHALL BE INSULATED AND HEAT TRACED TO PREVENT FREEZING.

P. ALL SANITARY 3" OR ABOVE SHALL BE INSPECTED BY A CAMERA PRIOR TO SUBSTANTIAL COMPLETION.

Q. ALL RVB-1 SHALL HAVE FILTER

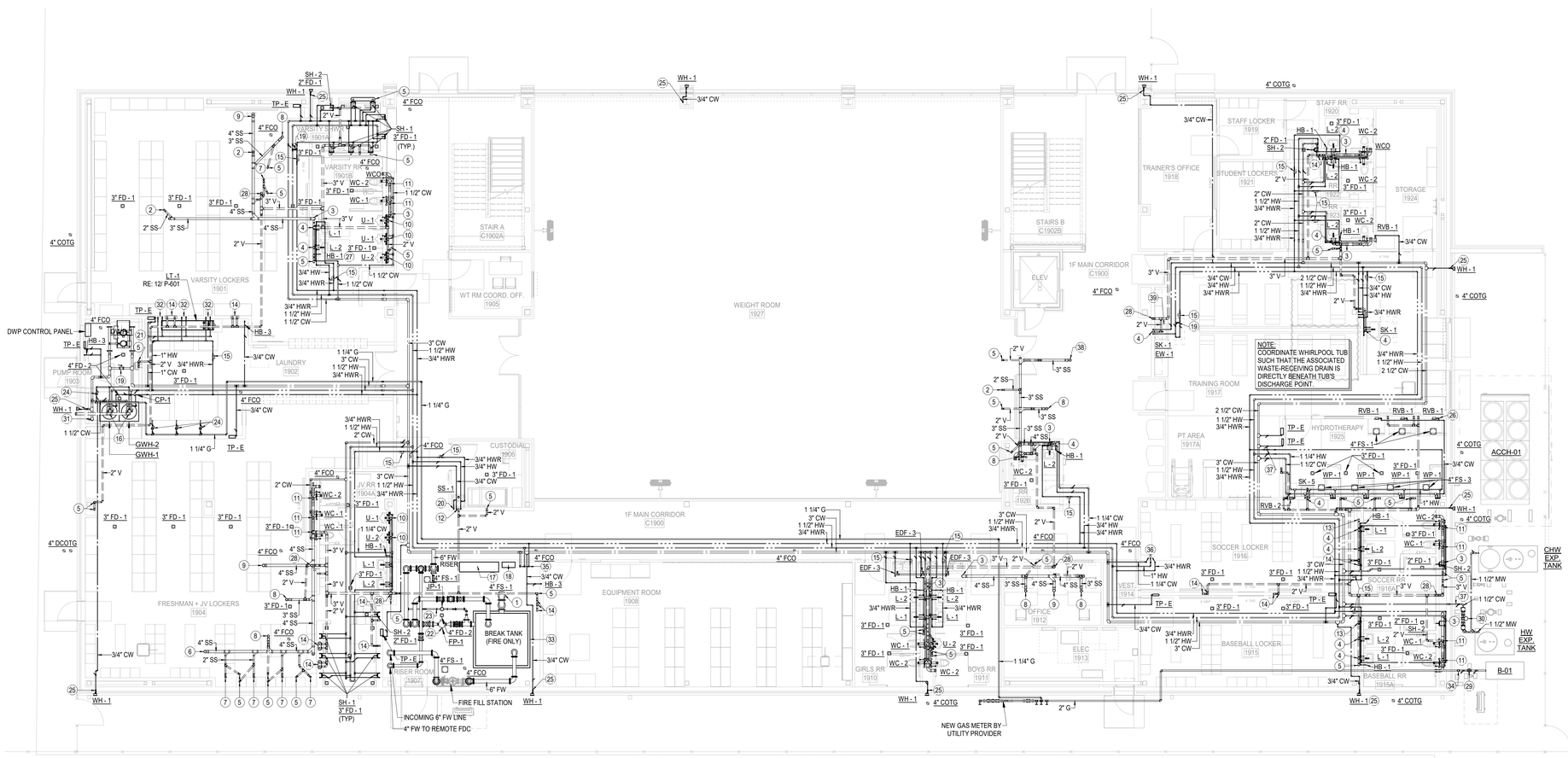

1 **1ST FLOOR PLUMBING PLAN**
SCALE: 1/8" = 1'-0"

PBK
www.pbk.com
TX FIRM: BR 1608
HOUSTON, TX 713-965-0608

LEAF ENGINEERS

PKG 3A - GPHS NEW FIELDHOUSE

1000 Keene St.
Galena Park, TX 77547

CLIENT PROJECT NO: 240539

ISSUE FOR PROPOSAL

Galena Park ISD

KEY PLAN
NORTH: PLAN TRUE

STATE OF TEXAS
DONALD C. RICHARDS
61572
June 10, 2025
LEAF ENGINEERS
F-18672

CLIENT	
Galena Park ISD	
DATE: June 10, 2025	PROJECT NUMBER: 240539

DRAWING HISTORY

No.	Description	Date

CHECKED BY: AA
DRAWN BY: AA/TN

1ST FLOOR PLUMBING PLAN

P-101

Plot Stamp:
6/6/2025 11:33:30 AM

2ND FLOOR PLUMBING PLAN
P-102
FOR BLUEBEAM LABELING/OCR:

0"
1"

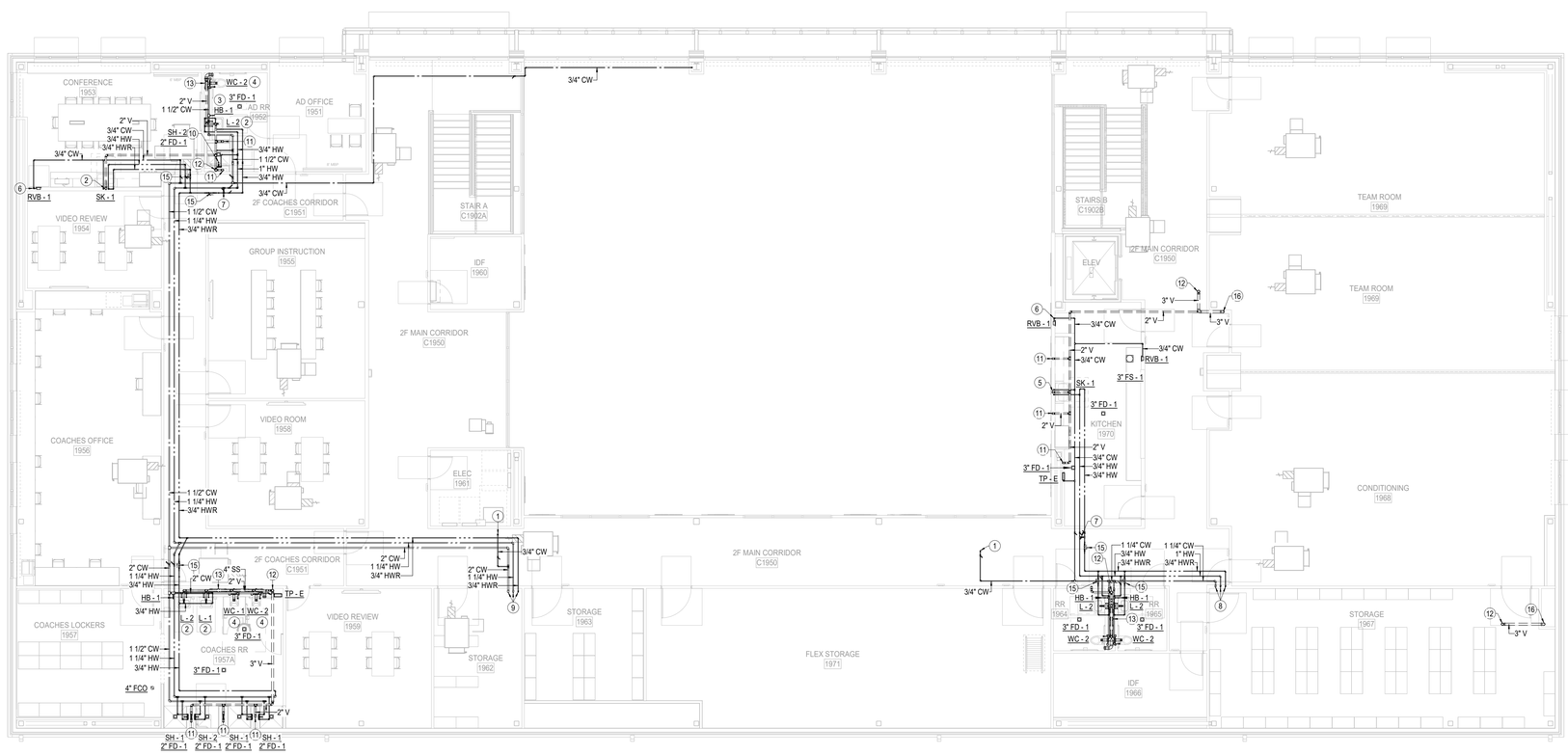

1 **2ND FLOOR PLUMBING PLAN**
SCALE: 1/8" = 1'-0"

GENERAL NOTES - PLUMBING PLAN

A. THE CONTRACTOR SHALL COMPLY WITH ALL AUTHORITIES HAVING JURISDICTION.

B. ALL FINAL CONNECTIONS TO FIXTURES AND EQUIPMENT SHALL BE MADE BY THE PLUMBING CONTRACTOR.

C. ALL PLUMBING PIPING SHALL BE COORDINATED WITH ALL OTHER TRADES PRIOR TO ANY INSTALLATION OF ALL PLUMBING FIXTURES AND EQUIPMENT BY THE PLUMBING CONTRACTOR.

D. ALL FLOOR DRAINS AND FLOOR SINKS SHOWN ON THIS DRAWING SHALL BE COORDINATED WITH ALL OTHER TRADES PRIOR TO INSTALLATION.

E. REFER TO ARCHITECTURAL DRAWING FOR EXACT LOCATIONS OF FIXTURES, EQUIPMENT, ETC. DO NOT SCALE FROM PLUMBING DRAWINGS.

F. ALL WALL CLEAN-OUTS SHALL BE ACCESSIBLE BY AN ACCESS PANEL.

G. PROVIDE AND INSTALL A DOUBLE EXTERIOR CLEAN-OUT (DFCO) ON ALL SANITARY LINES EXITING THE BUILDING.

H. ALL FLOOR DRAINS AND FLOOR SINKS SHALL BE PROVIDED WITH A TRAP PRIMER AND INSTALLED BY THE PLUMBING CONTRACTOR.

I. FIXTURES DESIGNATED AS ADA ACCESSIBLE BY ARCHITECT SHALL BE INSTALLED AT ADA ACCESSIBLE HEIGHT PER ARCHITECTURAL DETAILS.

J. ALL DOMESTIC COLD AND HOT WATER TAKE-OFFS SHALL HAVE AN ISOLATION SHUT-OFF VALVE.

K. FLOOR DRAINS AND FLOOR SINKS IN MECHANICAL ROOMS SHALL BE SET NOT LESS THAN 6" FROM HOUSEKEEPING PADS. RE: MECHANICAL DRAWINGS. DO NOT PLACE ON, OR IN, HOUSEKEEPING PAD, OR UNDERNEATH EQUIPMENT.

L. CONTRACTOR SHALL DEWATER ANY AREA AT OR BELOW GRADE PRIOR TO SETTING EQUIPMENT.

M. CONTRACTOR SHALL PROVIDE AND INSTALL A TRAP PRIMER, TP-1, AND A HOSE BIBB, HB-3, IN ALL MECHANICAL ROOMS.

N. CONTRACTOR SHALL PROVIDE AND INSTALL A HOSE BIBB WITH WHEEL HANDLE IN ALL MECHANICAL ROOMS, HB-3.

O. ANY AND ALL WATER PIPING EXPOSED TO OUTSIDE ELEMENTS SHALL BE INSULATED AND HEAT TRACED TO PREVENT FREEZING.

P. ALL SANITARY 3" OR ABOVE SHALL BE INSPECTED BY A CAMERA PRIOR TO SUBSTANTIAL COMPLETION.

Q. ALL RVB-1 SHALL HAVE FILTER.

KEYNOTES - PLUMBING PLAN

1 3/4" COLD WATER UP TO NON-FREEZE ROOF HYDRANT.

2 2" WASTE DOWN, 2" VENT UP FROM PLUMBING FIXTURE, 3/4" HOT AND COLD WATER DOWN TO SERVE PLUMBING FIXTURE.

3 3/4" COLD WATER DOWN TO HOSE BIBB.

4 4" WASTE DOWN AND 2" VENT UP FROM PLUMBING FIXTURE(S), 1-1/4" COLD WATER DOWN TO SERVE PLUMBING FIXTURE(S).

5 2" WASTE DOWN AND 2" VENT UP FROM PLUMBING FIXTURE. 3/4" COLD/HOT WATER DOWN TO SERVE SINK AND DISHWASHER. PROVIDE WATTS "288A" VACUUM BREAKER PRIOR TO CONNECTION TO DISHWASHER. CONNECT INDIRECT WASTE FROM DISHWASHER TO HAND SINK.

6 3/4" COLD WATER DOWN TO REFRIGERATOR VALVE BOX.

7 SHUTOFF VALVE FOR HOT WATER RETURN BYPASS TO REMAIN IN THE CLOSED POSITION. VALVE SHALL BE OPENED MANUALLY ON AN AS NEEDED BASIS BY MAINTANCE PERSONNEL, AND SHALL BE CLOSED WHEN MAINTENANCE IS COMPLETED.

8 1-1/4" COLD WATER & 1" HOT WATER UP AND 3/4" HOT WATER RETURN DOWN FROM ABOVE.

9 2" COLD WATER & 1-1/4" HOT WATER UP AND 3/4" HOT WATER RETURN DOWN FROM ABOVE.

10 3/4" HOT AND COLD WATER DOWN TO SERVE PLUMBING FIXTURE(S).

11 2" VENT UP.

12 3" VENT THRU ROOF.

13 4" WASTE DOWN.

15 3/4" HOT WATER RETURN BALANCING VALVE (CONFIRM/ADJUST SETPOINT OF EACH INDIVIDUAL BALANCING VALVE TO FLOW MINIMUM OF 0.5 GPM AND ADJUST AS REQUIRED TO PROVIDE PROPER/NECESSARY BALANCING).

16 3" VENT UP.

PBK
www.pbk.com
TX FIRM: BR 1608
HOUSTON, TX
713-365-0608

LEAF ENGINEERS

PKG 3A - GPHS NEW FIELDHOUSE

1000 Keene St.
Galena Park, TX 77547

CLIENT PROJECT NO: 240539

ISSUE FOR PROPOSAL

Galena Park ISD
EXCELLENCE IN ALL FOR ALL STUDENTS

KEY PLAN
NORTH: PLAN TRUE

STATE OF TEXAS
DONALD C. RICHARDS
61525
PROFESSIONAL ENGINEER
June 10, 2025
LEAF ENGINEERS
F-18672

CLIENT	
Galena Park ISD	
DATE: June 10, 2025	PROJECT NUMBER: 240539

DRAWING HISTORY

No.	Description	Date

CHECKED BY: AA
DRAWN BY: AA/TN

2ND FLOOR PLUMBING PLAN

P-102

Plot Stamp:
6/6/2025 11:33:32 AM

PLUMBING ROOF PLAN
P-301
FOR BLUEBEAM LABELING/OCR:

0"
1"

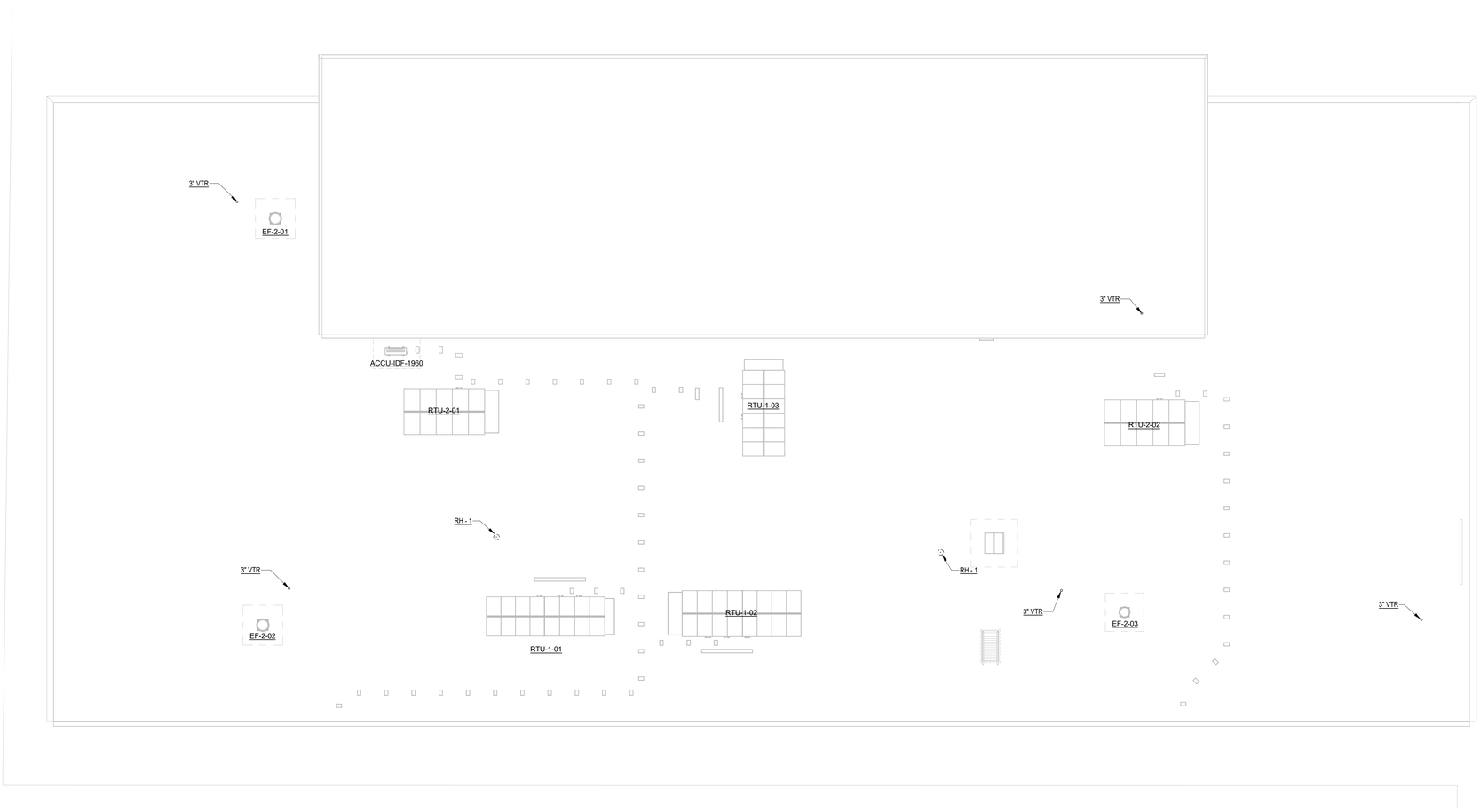

1 **ROOF PLUMBING PLAN**
SCALE: 1/8" = 1'-0"

GENERAL NOTES - PLUMBING PLAN

A. THE CONTRACTOR SHALL COMPLY WITH ALL AUTHORITIES HAVING JURISDICTION.

B. ALL FINAL CONNECTIONS TO FIXTURES AND EQUIPMENT SHALL BE MADE BY THE PLUMBING CONTRACTOR.

C. ALL PLUMBING PIPING SHALL BE COORDINATED WITH ALL OTHER TRADES PRIOR TO ANY INSTALLATION OF ALL PLUMBING FIXTURES AND EQUIPMENT BY THE PLUMBING CONTRACTOR.

D. ALL FLOOR DRAINS AND FLOOR SINKS SHOWN ON THIS DRAWING SHALL BE COORDINATED WITH ALL OTHER TRADES PRIOR TO INSTALLATION.

E. REFER TO ARCHITECTURAL DRAWING FOR EXACT LOCATIONS OF FIXTURES, EQUIPMENT, ETC. DO NOT SCALE FROM PLUMBING DRAWINGS.

F. ALL WALL CLEAN-OUTS SHALL BE ACCESSIBLE BY AN ACCESS PANEL.

G. PROVIDE AND INSTALL A DOUBLE EXTERIOR CLEAN-OUT (DFCO) ON ALL SANITARY LINES EXITING THE BUILDING.

H. ALL FLOOR DRAINS AND FLOOR SINKS SHALL BE PROVIDED WITH A TRAP PRIMER AND INSTALLED BY THE PLUMBING CONTRACTOR.

I. FIXTURES DESIGNATED AS ADA ACCESSIBLE BY ARCHITECT SHALL BE INSTALLED AT ADA ACCESSIBLE HEIGHT PER ARCHITECTURAL DETAILS.

J. ALL DOMESTIC COLD AND HOT WATER TAKE-OFFS SHALL HAVE AN ISOLATION SHUT-OFF VALVE.

K. FLOOR DRAINS AND FLOOR SINKS IN MECHANICAL ROOMS SHALL BE SET NOT LESS THAN 6" FROM HOUSEKEEPING PADS. RE: MECHANICAL DRAWINGS. DO NOT PLACE ON, OR IN, HOUSEKEEPING PAD, OR UNDERNEATH EQUIPMENT.

L. CONTRACTOR SHALL DEWATER ANY AREA AT OR BELOW GRADE PRIOR TO SETTING EQUIPMENT.

M. CONTRACTOR SHALL PROVIDE AND INSTALL A TRAP PRIMER, TP-1, AND A HOSE BIBB, HB-3, IN ALL MECHANICAL ROOMS.

N. CONTRACTOR SHALL PROVIDE AND INSTALL A HOSE BIBB WITH WHEEL HANDLE IN ALL MECHANICAL ROOMS, HB-3.

O. ANY AND ALL WATER PIPING EXPOSED TO OUTSIDE ELEMENTS SHALL BE INSULATED AND HEAT TRACED TO PREVENT FREEZING.

P. ALL SANITARY 3" OR ABOVE SHALL BE INSPECTED BY A CAMERA PRIOR TO SUBSTANTIAL COMPLETION.

Q. ALL RVB-1 SHALL HAVE FILTER.

KEYNOTES - PLUMBING PLAN

PBK
www.pbk.com
TX FIRM: BR 1608
HOUSTON, TX
713-365-0608

LEAF ENGINEERS

PKG 3A - GPHS NEW FIELDHOUSE

1000 Keene St.
Galena Park, TX 77547

CLIENT PROJECT NO: 240539

ISSUE FOR PROPOSAL

Galena Park ISD
GP
EXCELLENCE IN ALL FOR ALL KIDS

KEY PLAN
NORTH: PLAN TRUE

STATE OF TEXAS
DONALD C. RICHARDS
61525
LICENSED
PROFESSIONAL ENGINEER
June 10, 2025
LEAF ENGINEERS
F-16672

CLIENT	
Galena Park ISD	
DATE: June 10, 2025	PROJECT NUMBER: 240539

DRAWING HISTORY

No.	Description	Date

CHECKED BY: AA
DRAWN BY: AA/TN

PLUMBING ROOF PLAN

P-301

Plot Stamp:
6/6/2025 11:33:32 AM

PLUMBING SCHEDULES
P-501
FOR BLUEBEAM LABELING/OCR:

0"
1"

GAS WATER HEATER SCHEDULE

UNIT	MANUFACTURER AND MODEL NUMBER	LOCATION	CAPACITY (GAL)	RECOVERY (GPH)	TEMP RISE (°F)	INPUT (BTU)	REMARKS
GWH-1	A.O. SMITH BTH-199	PUMP ROOM 1903	100	235	100	199,000	• PROVIDE WITH THERM-X-TROL ST-30V-C EXPANSION TANK • PROVIDE WITH CONDENSATE NEUTRALIZER KIT • PROVIDE WITH CONCENTRIC VENT KIT
GWH-2	A.O. SMITH BTH-199	PUMP ROOM 1903	100	235	100	199,000	• PROVIDE WITH THERM-X-TROL ST-30V-C EXPANSION TANK • PROVIDE WITH CONDENSATE NEUTRALIZER KIT • PROVIDE WITH CONCENTRIC VENT KIT

NOTES:

1. COORDINATE WITH WATER HEATER MANUFACTURER'S INSTALLATION DRAWINGS FOR PROPER AND CORRECT INSTALLATION OF ALL EQUIPMENT AND APPURTENANCES.

PUMP SCHEDULE

UNIT	MANUFACTURER AND MODEL NUMBER	LOCATION	TYPE	INLET PRESSURE (PSI)	OUTLET PRESSURE (PSI)	RPM	CAPACITY		ELECTRICAL				REMARKS
							GPM	Ψ (FT)	HP	V	Φ	Hz	
CP-1	BELL & GOSSETT NBF-8S/LW	PUMP ROOM 1903	INLINE CIRCULATOR	-	2.2	2800	1.5	5	1/20	120	1	60	-
DWP-1	VC SYSTEMS 2VC-PMC-V-2-320-460	PUMP ROOM 1903	VERTICAL MULTISTAGE	-	48	3500	72	46	2	460	3	60	• DUPLEX BOOSTER
FP-1	AURORA 4-383-7C	RISER ROOM 1907	VERTICAL INLINE	-	40	3560	500	300	20	460	3	60	-
JP-1	TORNATECH PVM1-5	RISER ROOM 1907	VERTICAL MULTISTAGE	-	50	3500	5	000	1/2	460	3	60	• PROVIDE WITH SUCTION REDUCER AND DISCHARGE INCREASER
ESP-1	ZOELLER 940-0012	ELEVATOR PIT	SUBMERSIBLE	-	30	3450	53	15	4/10	115	1	60	-

NOTES:

1. COORDINATE WITH PUMP MANUFACTURER'S INSTALLATION DRAWINGS FOR PROPER AND CORRECT INSTALLATION OF ALL EQUIPMENT AND APPURTENANCES.

PLUMBING FIXTURE SCHEDULE

SYMBOL	DESCRIPTION	CONNECTION SIZE				REMARKS
		WASTE	VENT	CW	HW	
WC-1	WATER CLOSET, WALL-MOUNTED BOWL W/ 1-1/2" TOP SPUD, 1.28 GPF, ELONGATED RIM, PROVIDE OPEN FRONT SEATLESS COVER AND ADJUSTABLE CARRIER	4"	2"	1-1/2"	-	-
WC-2	WATER CLOSET, SAME AS WC-1 EXCEPT FLUSH VALVE SHALL BE ROUGHED-IN NO MORE THAN 44" AFF W/ CENTER LINE OF FIXTURE 18" FROM FINISHED WALL OR PARTITION, ADA	4"	2"	1-1/2"	-	-
U-1	URINAL, WALL-MOUNTED W/ 3/4" TOP SPUD, MINIMUM 1.2 GPF, MOUNT URINAL RIM AT 24" ABOVE FINISHED FLOOR, PROVIDE FLOOR SUPPORTED URINAL CARRIER	2"	2"	3/4"	-	-
U-2	URINAL, SAME AS U-1 EXCEPT RIM SHALL BE MOUNTED NO HIGHER THAN 17" AFF	2"	2"	3/4"	-	-
L-1	LAVATORY, WALL-MOUNTED, 0.5 GPM W/ AERATOR FAUCET, ZURN Z-8746-CP OFFSET GRID DRAIN, ZURN Z-8802LR-CP ANGLE STOPS W/ 03/8" (OD) TUBING, DEARBORN 701-1 17 GA. P-TRAP, TRUEBRO 105W OFFSET INSULATION KIT (NOT REQUIRED IF CABINET APRON IS INSTALLED), ADA, LEAD-FREE	2"	2"	3/4"	3/4"	• PROVIDE TEMPERING VALVE SIMILAR TO POWERS HYDROGUARD T/P SERIES E480
L-2	LAVATORY, SAME AS L-1 EXCEPT RIM SHALL BE MOUNTED NO HIGHER THAN 34" AFF	2"	2"	3/4"	3/4"	• PROVIDE TEMPERING VALVE SIMILAR TO POWERS HYDROGUARD T/P SERIES E480
SH-1	SHOWER, CONCEALED SUPPLY W/ INTEGRATED THERMOSTATIC MIXING VALVE, INTEGRAL SERVICE STOPS, VANDAL-PROOF SHOWER HEAD W/ WALL BRACKET, 1.5 GPM AERATOR, LEAD-FREE	2"	2"	3/4"	3/4"	-
SH-2	SHOWER, CONCEALED SUPPLY W/ INTEGRATED THERMOSTATIC MIXING VALVE, INTEGRAL SERVICE STOPS, VANDAL-PROOF SHOWER HEAD W/ WALL BRACKET, HAND-HELD SHOWER W/ METAL CLAD HOSE AND GLIDE RAIL, 1.5 GPM AERATOR, ADA, LEAD-FREE	2"	2"	3/4"	3/4"	-
WP-1	WHIRLPOOL VALVE, EXPOSED SUPPLY W/ PRESSURE BALANCED THERMOSTATIC MIXING VALVES, INTEGRAL SERVICE STOPS, HAND-HELD SHOWER W/ METAL CLAD HOSE, LEAD-FREE	2"	2"	3/4"	3/4"	-
EDF-3	ELECTRIC DRINKING FOUNTAIN, INDOOR BI-LEVEL WALL-MOUNTED W/ BOTTLE FILLER, STAINLESS STEEL FINISH, DEARBORN 704-1 1-1/2" 17 GA. P-TRAP, BRASS CRAFT G2CR19C ANGLE STOP, AQUAFLO SFC-120-PP STAINLESS STEEL FLEX CONNECTORS, CHROME PLATED BUBBLER, SELF-CLOSING MECHANICAL PUSHBUTTON, STREAM REGULATOR, NON-FILTERED, REFRIGERATED, ELECTRICAL, ADA, LEAD-FREE	2"	2"	3/4"	-	-
SS-1	SERVICE SINK, FLOOR-MOUNTED SQUARE TYPE SINGLE BASIN, SOLID SURFACE MATERIAL (NON-POROUS STONE), INCLUDE HOSE W/ BRACKET AND MOP HANGER, LEAD-FREE	3"	2"	3/4"	3/4"	• PROVIDE SERVICE SINK FAUCET W/ WALL BRACE, PAIL HOOK AND 3/4" HOSE THREAD ON SPOUT • PROVIDE WITH STAINLESS STEEL WALL GUARDS
SS-2	SERVICE SINK, FLOOR-MOUNTED CORNER TYPE W/ DROP FRONT SINGLE BASIN, SOLID SURFACE MATERIAL (NON-POROUS STONE), INCLUDE HOSE W/ BRACKET AND MOP HANGER, LEAD-FREE	3"	2"	3/4"	3/4"	• PROVIDE SERVICE SINK FAUCET W/ WALL BRACE, PAIL HOOK AND 3/4" HOSE THREAD ON SPOUT • PROVIDE WITH STAINLESS STEEL WALL GUARDS
FD-1	FLOOR DRAIN, ROUND, ADJUSTABLE NICKEL-BRONZE STRAINER, LACQUERED CAST IRON BODY W/ DOUBLE DRAINAGE FLANGE, WEEP HOLES, REVERSIBLE CLAMPING COLLAR, PUSH ON GASKET OUTLET OR NO HUB OUTLET	SEE PLANS		-	-	• PROVIDE TRAP PRIMER TYPE TP-1 OR TP-2 OR TP-E
FD-2	FLOOR DRAIN, SQUARE, ADJUSTABLE NICKEL-BRONZE STRAINER, LACQUERED CAST IRON BODY W/ DOUBLE DRAINAGE FLANGE, WEEP HOLES, REVERSIBLE CLAMPING COLLAR, SEDIMENT BUCKET, PUSH ON GASKET OUTLET OR NO HUB OUTLET	SEE PLANS		-	-	• PROVIDE TRAP PRIMER TYPE TP-1 OR TP-E
FS-1	FLOOR SINK, 8" SQUARE, MEDIUM-DUTY ACID RESISTANT COATED INTERIOR AND NICKEL-BRONZE RIM W/ SECURED 1/2 GRATE, CAST IRON BODY, INTEGRAL SEEPAGE PAN, POLISHED ALUMINUM BOTTOM DOME STRAINER, PUSH ON GASKET OUTLET OR NO HUB OUTLET	SEE PLANS		-	-	• PROVIDE TRAP PRIMER TYPE TP-1 OR TP-E
FS-2	FLOOR SINK, 12" SQUARE, LIGHT-DUTY ACID RESISTANT COATED INTERIOR AND NICKEL-BRONZE RIM W/ SECURED 3/4 GRATE, CAST IRON BODY, INTEGRAL SEEPAGE PAN, POLISHED ALUMINUM BOTTOM DOME STRAINER, PUSH ON GASKET OUTLET OR NO HUB OUTLET	SEE PLANS		-	-	• PROVIDE TRAP PRIMER TYPE TP-1 OR TP-E
FS-3	FLOOR SINK, 12" SQUARE, LIGHT-DUTY ACID RESISTANT COATED INTERIOR AND NICKEL-BRONZE RIM W/ SECURED 1/2 GRATE, CAST IRON BODY, INTEGRAL SEEPAGE PAN, POLISHED ALUMINUM BOTTOM DOME STRAINER, PUSH ON GASKET OUTLET OR NO HUB OUTLET	SEE PLANS		-	-	• PROVIDE TRAP PRIMER TYPE TP-1 OR TP-E
TP-1	TRAP PRIMER, PRESSURE DROP TYPE, VACUUM BREAKER TRAP PRIMER CONNECTED TO COLD WATER SUPPLY ONLY W/ ISOLATION VALVE, LEAD-FREE	-	-	-	-	-
TP-2	TRAP PRIMER, FLUSH VALVE TYPE, VACUUM BREAKER TRAP PRIMER ATTACHED TO WATER CLOSET FLUSH VALVE, LEAD-FREE	-	-	-	-	-
TP-E	TRAP PRIMER, ELECTRIC TYPE, VACUUM BREAKER TRAP PRIMER CONNECTED TO COLD WATER SUPPLY MANIFOLD, SLOW CLOSING 24 VAC SOLENOID VALVE W/ INTEGRAL STRAINER, 120 - 24 VAC TRANSFORMER, LEAD-FREE	-	-	-	-	-
WH-1	WALL HYDRANT, WALL-MOUNTED, ENCLOSED IN BOX FLUSH W/ WALL, ANTI-SIPHON WALL HYDRANT W/ INTEGRAL BACKFLOW PREVENTER, FREEZE-RESISTANT, LOCKABLE BOX AND LOOSE TEE KEY TO BE FURNISHED W/ WALL HYDRANT, LEAD-FREE	-	-	3/4"	-	-
RH-1	ROOF HYDRANT, ROOF-MOUNTED, BACKFLOW PROTECTED, ROD GUIDE TO ELIMINATE SIDE PULL, ADJUSTABLE LINK AND POSITIVE LEVER LOCK TENSION, VARIABLE FLOW PLUNGER, FREEZE-RESISTANT, LEAD-FREE	1"	-	1"	-	• ROOF HYDRANT DRAIN, IF APPLICABLE, SHALL BE PIPED TO AN APPROVED WASTE RECEPTOR LOCATION
RVB-1	REFRIGERATOR VALVE BOX, WALL-MOUNTED, STAINLESS STEEL PREFORMED ROUGH-IN BOX FLUSH W/ WALL, INTEGRAL WATER HAMMER ARRESTER, LEAD-FREE	2"	2"	3/4"	3/4"	-
RVB-2	REFRIGERATOR VALVE BOX, WALL-MOUNTED, STAINLESS STEEL PREFORMED ROUGH-IN BOX FLUSH W/ WALL, INTEGRAL WATER HAMMER ARRESTER, LEAD-FREE	2"	2"	3/4"	3/4"	-
TMV-1	THERMOSTATIC MIXING VALVE, POINT-OF-USE, FLOW CAPACITY BETWEEN 0.35 GPM MINIMUM AND 4 GPM MAXIMUM AT 5 PSI PRESSURE DROP, VOLUME CONTROL SHUT-OFF VALVE ON OUTLET, CHECK VALVE ON INLETS, LEAD-FREE	-	-	3/4"	3/4"	-
TMV-2	THERMOSTATIC MIXING VALVE, HIGH / LOW USE, FLOW CAPACITY BETWEEN 3 GPM MINIMUM AND 14 GPM MAXIMUM AT 5 PSI PRESSURE DROP, VOLUME CONTROL SHUT-OFF VALVE ON OUTLET, CHECK VALVE ON INLETS, LEAD-FREE	-	-	1-1/4"	1-1/4"	-
TMV-3	THERMOSTATIC MIXING VALVE, MASTER FIXTURE BANK USE, FLOW CAPACITY BETWEEN 3 GPM MINIMUM AND 30 GPM MAXIMUM AT 5 PSI PRESSURE DROP, VOLUME CONTROL SHUT-OFF VALVE ON OUTLET, CHECK VALVE ON INLETS, LEAD-FREE	-	-	1-1/4"	1-1/4"	-
EW-1	EMERGENCY EYE AND FACE WASH, PEDESTAL MOUNTED, BARRIER FREE, (4) POLYPROPYLENE SPRAY HEADS W/ INTEGRAL DUST COVERS, 1.6 GPM FLOW CONTROL ORIFICES MOUNTED ON A CHROME PLATED BRASS EYEWASH ASSEMBLY, FILTERED, ADA, LEAD-FREE	-	-	3/4"	-	-
HB-1	HOSE BIBB, WALL-MOUNTED, ENCLOSED IN BOX FLUSH W/ WALL, ANTI-SIPHON WALL FAUCET W/ INTEGRAL BACKFLOW PREVENTER, LEAD-FREE	-	-	3/4"	-	-
HB-2	HOSE BIBB, WALL-MOUNTED, ENCLOSED IN BOX FLUSH W/ WALL, ANTI-SIPHON WALL FAUCET W/ INTEGRAL BACKFLOW PREVENTER, FREEZE-RESISTANT, LEAD-FREE	-	-	3/4"	-	• PROVIDE IN EXTERIOR MECHANICAL SPACES
HB-3	HOSE BIBB, WALL-MOUNTED, EXPOSED, ANTI-SIPHON WALL FAUCET W/ INTEGRAL BACKFLOW PREVENTER, LEAD-FREE	-	-	3/4"	-	• PROVIDE IN INTERIOR MECHANICAL SPACES
SK-1	SINK, DROP-IN SINGLE BOWL, TYPE 304 STAINLESS STEEL, WRISTBLADE LEVER HANDLES, 1.5 GPM W/ AERATOR FAUCET, ZURN Z-8746-CP OFFSET GRID DRAIN, ZURN Z-8802LR-CP ANGLE STOPS W/ Ø3/8" (OD) TUBING, DEARBORN 701-1 17 GA. P-TRAP, TRUEBRO 105W OFFSET INSULATION KIT (NOT REQUIRED IF CABINET APRON IS INSTALLED), ADA, LEAD-FREE	2"	2"	3/4"	3/4"	• PROVIDE TEMPERING VALVE SIMILAR TO POWERS HYDROGUARD T/P SERIES E480
SK-2	SINK, DROP-IN DOUBLE BOWL, TYPE 304 STAINLESS STEEL, WRISTBLADE LEVER HANDLES, 1.5 GPM W/ AERATOR FAUCET, ZURN Z-8746-CP OFFSET GRID DRAIN, ZURN Z-8802LR-CP ANGLE STOPS W/ Ø3/8" (OD) TUBING, DEARBORN 701-1 17 GA. P-TRAP, TRUEBRO 105W OFFSET INSULATION KIT (NOT REQUIRED IF CABINET APRON IS INSTALLED), ADA, LEAD-FREE	2"	2"	3/4"	3/4"	• PROVIDE TEMPERING VALVE SIMILAR TO POWERS HYDROGUARD T/P SERIES E480
SK-3	SINK, DROP-IN SINGLE (LARGE) BOWL, TYPE 304 STAINLESS STEEL, WRISTBLADE LEVER HANDLES, 1.5 GPM W/ AERATOR FAUCET, ZURN Z-8746-CP OFFSET GRID DRAIN, ZURN Z-8802LR-CP ANGLE STOPS W/ Ø3/8" (OD) TUBING, DEARBORN 701-1 17 GA. P-TRAP, TRUEBRO 105W OFFSET INSULATION KIT (NOT REQUIRED IF CABINET APRON IS INSTALLED), ADA, LEAD-FREE	2"	2"	3/4"	3/4"	• PROVIDE TEMPERING VALVE SIMILAR TO POWERS HYDROGUARD T/P SERIES E480 • PROVIDE ZURN MODEL Z1180 PLASTER TRAP AT ART ROOM SINKS
SK-4	SINK, WALL-MOUNTED SINGLE BOWL, TYPE 304 STAINLESS STEEL, WRISTBLADE LEVER HANDLES, 1.5 GPM W/ AERATOR FAUCET, ZURN Z-8746-CP OFFSET GRID DRAIN, ZURN Z-8802LR-CP ANGLE STOPS W/ Ø3/8" (OD) TUBING, DEARBORN 701-1 17 GA. P-TRAP, TRUEBRO 105W OFFSET INSULATION KIT (NOT REQUIRED IF CABINET APRON IS INSTALLED), ADA, LEAD-FREE	2"	2"	3/4"	3/4"	• PROVIDE TEMPERING VALVE SIMILAR TO POWERS HYDROGUARD T/P SERIES E480
SK-5	SINK, FLOOR-MOUNTED SINGLE BOWL, TYPE 304 STAINLESS STEEL, WRISTBLADE LEVER HANDLES, 1.5 GPM W/ AERATOR FAUCET, ZURN Z-8746-CP OFFSET GRID DRAIN, ZURN Z-8802LR-CP ANGLE STOPS W/ Ø3/8" (OD) TUBING, DEARBORN 701-1 17 GA. P-TRAP, TRUEBRO 105W OFFSET INSULATION KIT (NOT REQUIRED IF CABINET APRON IS INSTALLED), ADA, LEAD-FREE	2"	2"	3/4"	3/4"	• PROVIDE TEMPERING VALVE SIMILAR TO POWERS HYDROGUARD T/P SERIES E480

NOTES:

1. ROUGH-IN SUPPLY WASTE AND VENT PIPE SIZES INDICATED ARE MINIMUM SIZES SHOWN FOR ROUGH-IN PURPOSES ONLY.
2. COORDINATE WITH FIXTURE MANUFACTURER'S INSTALLATION DRAWINGS FOR PROPER AND CORRECT INSTALLATION OF ALL FIXTURES AND APPURTENANCES.
3. ALL PLUMBING FIXTURES SHALL BE COMPLETELY ROUGH-IN BY THE PLUMBING CONTRACTOR AND SHALL MEET ALL CODES HAVING JURISDICTION.
4. ALL FIXTURES TO BE COMMERCIAL GRADE UNLESS OTHERWISE NOTED.
5. PROVIDE A WATER HAMMER ARRESTER IN PIPING TO ALL FIXTURES AND / OR FIXTURE BANKS.
6. PROVIDE A SHUT-OFF VALVE AT ALL FIXTURES AND / OR FIXTURE BANKS AND AT EACH FLOOR IF FIXTURES AND / OR FIXTURE BANKS ARE STACKED (MULTI-LEVEL).

PBK
www.pbk.com
TX FIRM: BR 1608
HOUSTON, TX
713-965-0608

LEAF ENGINEERS

PKG 3A - GPHS NEW FIELDHOUSE

1000 Keene St.
Galena Park, TX 77547

CLIENT PROJECT NO: 240539

ISSUE FOR PROPOSAL

Galena Park ISD

STATE OF TEXAS
DONALD C. RICHARDS
61525
PROFESSIONAL ENGINEER

June 10, 2025
LEAF ENGINEERS
F-16672

CLIENT	
Galena Park ISD	
DATE: June 10, 2025	PROJECT NUMBER: 240539

DRAWING HISTORY

No.	Description	Date

CHECKED BY: AA
DRAWN BY: AA/TN

PLUMBING SCHEDULES

P-501

Plot Stamp:
6/6/2025 11:33:33 AM

PLUMBING DETAILS
P-601

FOR BLUEBEAM LABELING/OCR:

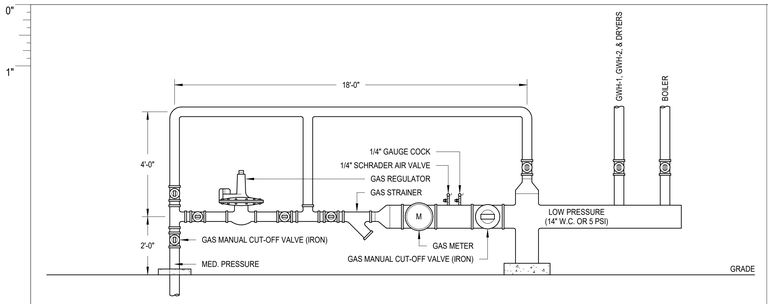

25 TYPICAL LARGE SERVICE GAS METER
N.T.S

NOTES:
1. ALL PIPING SHALL BE SECURED TO MAKE RIGID.
2. ALL LINES TO BE FULL SIZE TO POINT OF CONNECTION AT HEATER.
3. TEMPERATURE SET POINT (140F) AND AQUASTAT OPERATION POINTS.

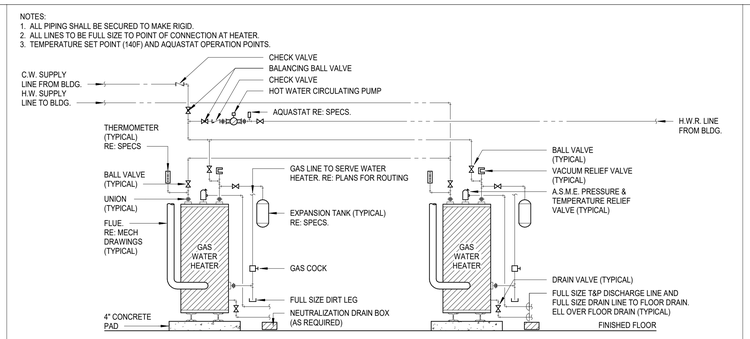

24 GAS FIRED WATER HEATER
N.T.S

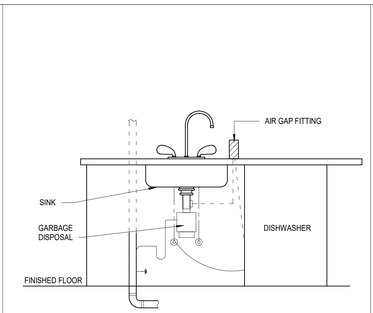

23 GARBAGE DISPOSAL AND DISHWASHER
N.T.S

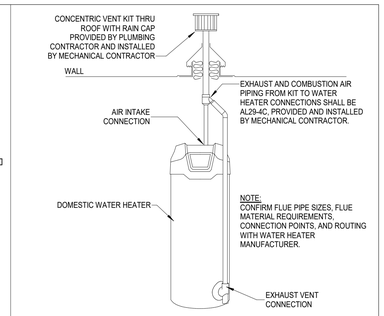

22 GAS WATER HEATER FLUE DETAIL
N.T.S

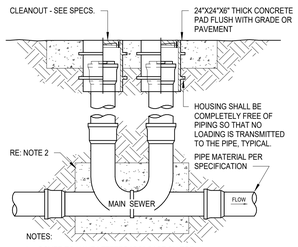

NOTES:
1. COVER TO HAVE LETTERS "CO" CAST ON TOP.
2. CONCRETE REST BLOCK SHALL BE 2'-0" LONG x DIA. OF BARREL +6" ON EACH SIDE.
3. SINGLE OR DOUBLE CLEANOUT REQUIRED AS SHOWN ON PLANS.

21 DOUBLE EXTERIOR CLEANOUT
N.T.S

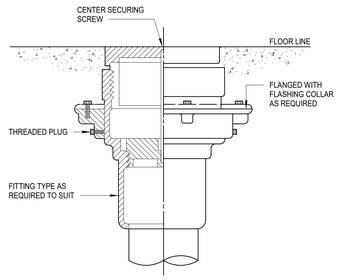

20 FLOOR CLEANOUT
N.T.S

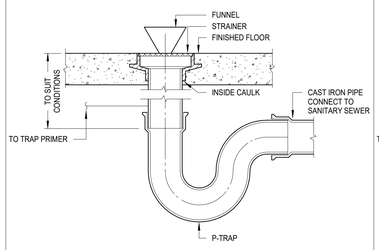

19 FLOOR DRAIN DETAIL
N.T.S

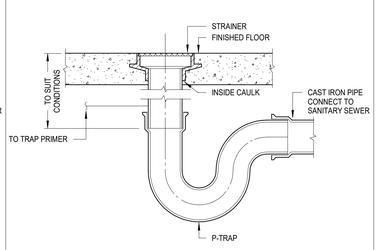

18 FLOOR DRAIN DETAIL
N.T.S

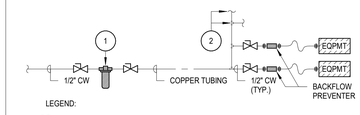

LEGEND:

1. AQUA-PURE SINGLE CARTRIDGE FILTER MODEL SST1HA WITH STAINLESS STEEL HOUSING W/ BRASS HEAD, CARBON TYPE 1-50 MICRONS CARTRIDGE FILTER. INSTALL IN ACCESSIBLE LOCATION OR APPROVED EQUAL.
2. ROUTE COPPER TUBING TAKE-OFF WITH WATTS LF7 BACKFLOW PREVENTER AND SHUT-OFF VALVE TO SERVE EACH APPLIANCE DOWNSTREAM OF WATER FILTER.
3. AQUA-PURE AP717 IN-LINE FILTRATION SYSTEM, CARBON TYPE 1-50 MICRONS CARTRIDGE FILTER. INSTALL AT ALL REFRIGERATOR WALL BOXES.

NOTES:

1. RPZ TYPE BACKFLOW PREVENTER WHERE REQUIRED BY LOCAL CODES.
2. INSTALL IN ACCORDANCE WITH THE AMERICAN SOCIETY OF SANITARY ENGINEERING STANDARD 1013 LATEST ADDITIONS FOR BACKFLOW PREVENTERS.
3. COORDINATE ALL FINAL APPLIANCE SCHEDULE TYPE AND LOCATION WITH ARCHITECTURAL DRAWINGS.

17 WATER FILTER/APPLIANCE
N.T.S

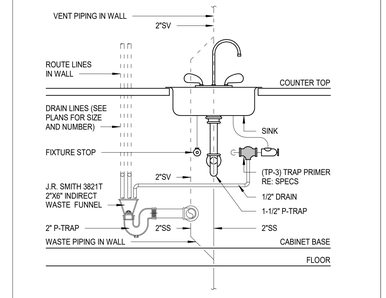

16 INDIRECT WASTE RECEPTOR
N.T.S

NOTE:
SEE SPECIFICATIONS FOR VIBRATION
ISOLATION REQUIREMENTS

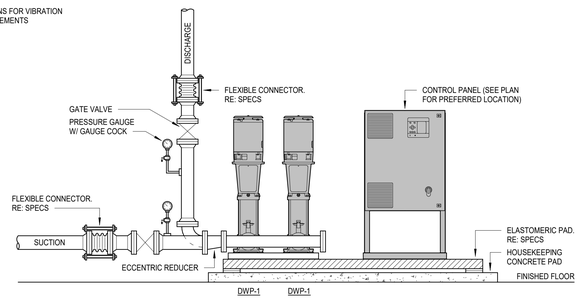

15 DUPLEX PACKAGE PUMPING SYSTEM
N.T.S

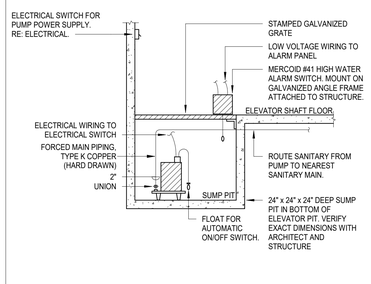

14 ELEVATOR SUMP PUMP
N.T.S

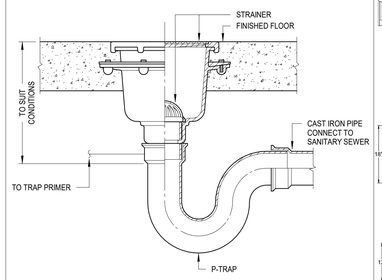

13 FLOOR SINK
N.T.S

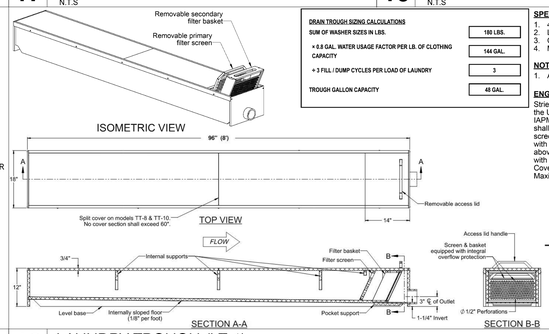

DRAIN TROUGH SIZING CALCULATIONS	
SUM OF WASHER SIZES IN LBS.	180 LBS.
x 0.8 GAL. WATER USAGE FACTOR PER LB. OF CLOTHING CAPACITY	144 GAL.
÷ 3 FILL / DUMP CYCLES PER LOAD OF LAUNDRY	3
TROUGH GALLON CAPACITY	48 GAL.

SPECIFICATIONS
1. 4" Plain End outlet shown.
2. Liquid Capacity: *See unit options.*
3. Cover weight limit: 450 lbs.
4. Maximum operating temperature 165˚F intermittent.

NOTES
1. All inlet connections are field installed.

ENGINEER SPECIFICATION GUIDE
Striem Tuff Trough shall be lifetime guaranteed and made in the USA of 3/4" polyethylene. Trough shall be certified to IAPMO/ANSI/CAN Z1167 and carry a UPC listing. Trough shall have removable, corrosion-resistant primary filter screen and secondary filter basket. Trough shall be furnished with a nested cover, internally sloped floor, and suitable for above- or below-grade installation. Trough shall be equipped with a plain end outlet. Inlet connections are field installed. Cover shall have a maximum 450 lbs. load capacity. Maximum operating temperature 165˚F intermittent.

OPTIONS			
Select Unit			
TT-4	4" x 18" x 12"	27 gal.	
TT-5	5" x 18" x 12"	34 gal.	
TT-6	6" x 18" x 12"	41 gal.	
■ TT-8	8" x 18" x 12"	55 gal.	
TT-10	10" x 18" x 12"	68 gal.	
Additional Options			
HDL-2-20 Stainless Steel Inlet Strainer (Not Qty.)			

12 LAUNDRY TROUGH (LT-1)
N.T.S

6 TRAP PRIMER (TP-2) W/ DISTRIBUTION
N.T.S

7 TRAP PRIMER (TP-2)
N.T.S

9 RED. PRESSURE BACKFLOW ASSEMBLY
N.T.S

NOTE: ELECTRONIC TRAP PRIMERS SHALL BE USED AS INDICATED IN SPECIFICATIONS AND PLANS.

8 ELECTRONIC TRAP PRIMER (TP-E)
N.T.S

NOTES:
1. ALL STEEL HOT DIPPED GALV AFTER FABRICATION IF OUTDOORS; SANDBLAST AND SHOP PRIME ALL OTHERS
2. SECURE W/ APPROVED ANCHORS TO MATCH WALL CONSTRUCTION

NOTES:
ROUTE PIPING AS LOW AS
POSSIBLE TO CEILING GRID
FOR EASE OF ACCESSIBILITY

11 SINGLE PIPE TYPE 1 CLEVIS HANGER
N.T.S

NOTES:
SIZE RODS, SPRING CUSHION, AND HORIZONTAL
MEMBER APPROVED TO SATISFY LOAD REQUIREMENT
W/ SAFETY FACTOR OF 5

10 PIPE SUPPORT - TRAPEZE TYPE
N.T.S

NOTES:
1. TRAP PRIMER SHALL BE LOCATED TO ALLOW ACCESS FOR MAINTENANCE. PROVIDE ACCESS PANEL FOR T.P.'s LOCATED INSIDE CHASES OR ANY OTHER INACCESSIBLE LOCATION.
2. NUMBER OF DISTRIBUTION UNITS AS REQUIRED
3. 1/2" TYPE "K" COPPER WITH NO JOINTS FROM DISTRIBUTION UNIT TO FLOOR DRAINS.
4. BELOW GRADE LINES (BURIED) BELOW GRADE PIPING SHALL BE ENCASED WITHIN ½" THICK UN-SLIT FLEXIBLE TUBE TYPE ELASTOMERIC THERMAL INSULATION UP TO 1" ABOVE SLAB AT BOTH ENDS. INSULATION SHALL BE AP/ARMAFLEX OR RUBATEX INSUL-TUBE 180.
5. AUTOMATIC TRAP PRIMER (TP-1) REFER TO PLUMBING FIXTURE SCHEDULE AND SPECS.

4 TRAP PRIMER (TP-1) W/ DISTRIBUTION
N.T.S

3 PIPE WALL SUPPORT
N.T.S

2 CONDENSATE TO SINK TAILPIECE
N.T.S

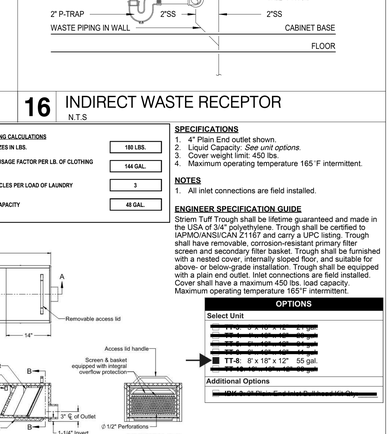

1 FIRE AND WATER LINE ENTRY
N.T.S

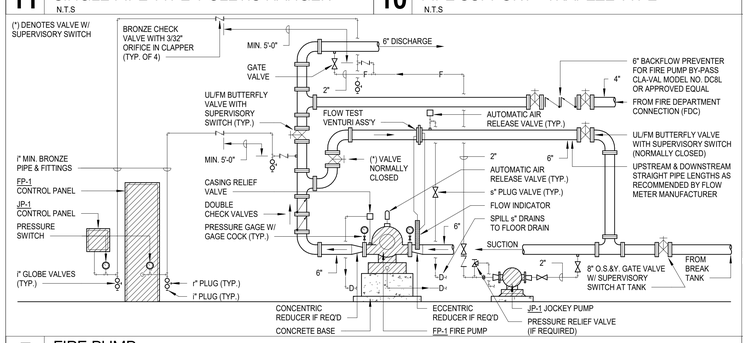

5 FIRE PUMP
N.T.S

Plot Stamp:
6/6/2025 11:33:33 AM

PBK
www.pbk.com
TX FIRM: BR 1608
HOUSTON, TX
713-965-0608

LEAF ENGINEERS

PKG 3A - GPHS NEW FIELDHOUSE

1000 Keene St.
Galena Park, TX 77547

CLIENT PROJECT NO: 240539

ISSUE FOR PROPOSAL

Galena Park ISD
GP
BUILDING WALL FOR WALL PERIOD

STATE OF TEXAS
DONALD C. RICHARDS
61522
PROFESSIONAL ENGINEER
June 10, 2025
LEAF ENGINEERS
F-18672

CLIENT	
Galena Park ISD	
DATE: June 10, 2025	PROJECT NUMBER: 240539

DRAWING HISTORY

No.	Description	Date

CHECKED BY: AA
DRAWN BY: AA/TN

PLUMBING DETAILS

P-601

PLUMBING DETAILS
P-602
FOR BLUEBEAM LABELING/OCR:

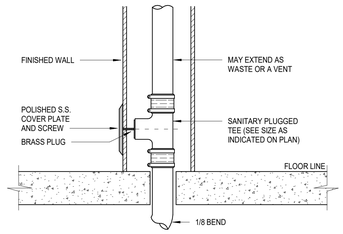

22 WALL CLEANOUT DETAIL
N.T.S

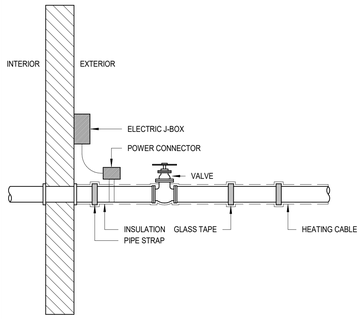

21 HEAT TRACE
N.T.S

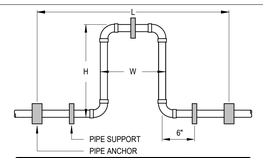

PIPE SIZE	40 DEGREE RISE L < 300 L.F.		60 DEGREE RISE L < 300 L.F.		80 DEGREE RISE L < 300 L.F.	
	W	H	W	H	W	H
3/4"	24"	48"	24"	48"	24"	48"
1"	24"	48"	36"	72"	36"	72"
1-1/4"	24"	48"	36"	72"	36"	72"
1-1/2"	24"	48"	36"	72"	36"	72"
2"	24"	48"	36"	72"	36"	72"
2-1/2"	24"	48"	36"	72"	36"	72"
3"	24"	48"	36"	72"	48"	96"
4"	24"	48"	36"	72"	48"	96"

20 EXPANSION LOOP TABLE
N.T.S

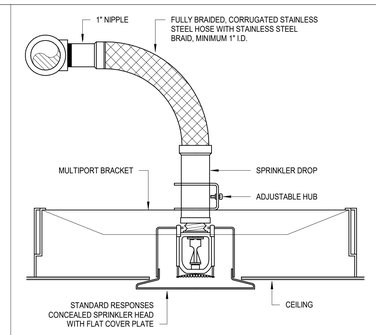

19 FLEXIBLE SPRINKLER PIPING
N.T.S

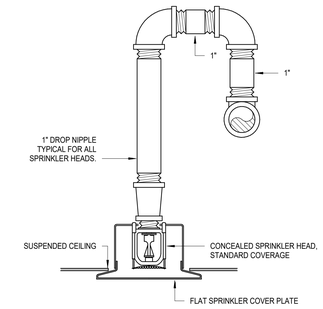

18 CONCEALED SPRINKLER HEAD
N.T.S

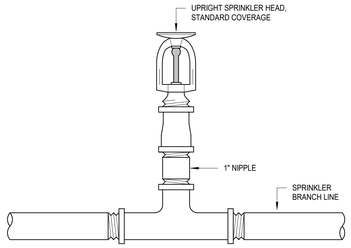

17 UPRIGHT SPRINKLER HEAD
N.T.S

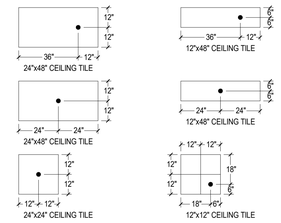

NOTE:
ALL LOCATIONS INDICATED ARE TO BE MAINTAINED WITHIN PLUS OR MINUS 1/2", AND ALIGNED WITH ADJACENT HEADS FOR A UNIFORM, EVEN APPEARANCE OF COMPLETED INSTALLATION. POSITIONS INDICATED APPLY TO FULL SIZE SMOOTH SURFACE TILES, AS WELL AS FULL SIZE SUB-GRIDDED (SCORED OR GRAPHICALLY DIVIDED) SURFACE TILES. THE APPEARANCE OF THE FINISHED CEILING TILES AS INSTALLED OVERRIDES THE ACTUAL PHYSICAL DIMENSIONS OF THE TILE FOR PLACEMENTS INDICATED HEREIN. VERIFY CEILING TILE TYPES FROM ARCHITECTURAL DOCUMENTATION.

16 SPRINKLER HEAD LOCATIONS
N.T.S

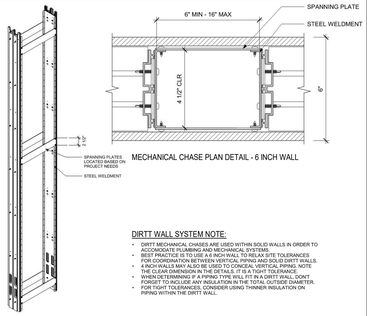

DIRTT WALL SYSTEM NOTE:
- DIRTT MECHANICAL CHASES ARE USED WITHIN SOLID WALLS IN ORDER TO ACCOMODATE PLUMBING AND MECHANICAL SYSTEMS.
- BEST PRACTICE IS TO USE A 6 INCH WALL TO RELAX SITE TOLERANCES FOR COORDINATION BETWEEN VERTICAL PIPING AND SOLID DIRTT WALLS.
- FOR TIGHT TOLERANCES, CONSIDER USING THINNER INSULATION ON PIPING WITHIN THE DIRTT WALL.
- WHEN DETERMINING IF A PIPING TYPE WILL FIT IN A DIRTT WALL, DONT FORGET TO INCLUDE ANY INSULATION IN THE TOTAL OUTSIDE DIAMETER.

15 PLUMBING AT 6" DIRTT WALLS
N.T.S

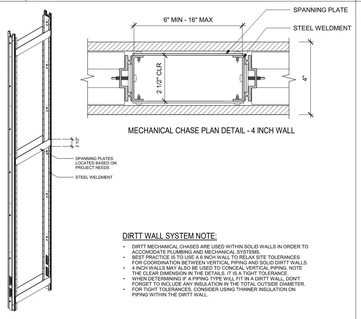

DIRTT WALL SYSTEM NOTE:
- DIRTT MECHANICAL CHASES ARE USED WITHIN SOLID WALLS IN ORDER TO ACCOMODATE PLUMBING AND MECHANICAL SYSTEMS.
- BEST PRACTICE IS TO USE A 6 INCH WALL TO RELAX SITE TOLERANCES FOR COORDINATION BETWEEN VERTICAL PIPING AND SOLID DIRTT WALLS.
- FOR TIGHT TOLERANCES, CONSIDER USING THINNER INSULATION ON PIPING WITHIN THE DIRTT WALL.
- WHEN DETERMINING IF A PIPING TYPE WILL FIT IN A DIRTT WALL, DONT FORGET TO INCLUDE ANY INSULATION IN THE TOTAL OUTSIDE DIAMETER.
- FOR TIGHT TOLERANCES, CONSIDER USING THINNER INSULATION ON PIPING WITHIN THE DIRTT WALL.

14 PLUMBING AT 4" DIRTT WALLS
N.T.S

NOTE:
1. GAS VALVE SHALL BE INSTALLED IN 3 O'CLOCK OR 9 O'CLOCK POSITION ONLY: 9 O'CLOCK 3 O'CLOCK
2. INSTALL TEST PORT AT EACH SIDE OF ALL NATURAL GAS PRESSURE REGULATORS.

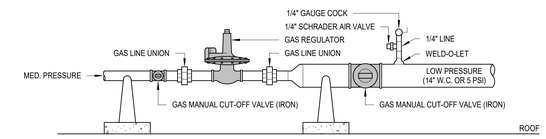

13 TYPICAL GAS REGULATOR INSTALLATION
N.T.S

NOTE:
UPC COMPLIANCE

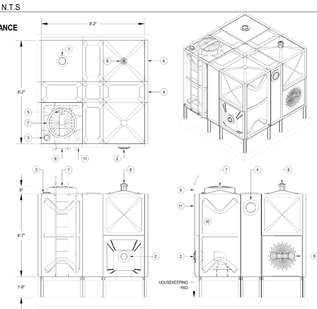

1 STORAGE TANK DETAIL
SCALE: NTS

WATER STORAGE TANK COORDINATION SCHEDULE

NO.	DESCRIPTION	QTY.	SIZE	TYPE
1	TANK INLET CONNECTION	1		GROOVED
2	TANK VORTEX OUTLET CONNECTION	1		GROOVED
3	LEVEL CONTROL CONNECTION	1		FLANGE
4	OVERFLOW CONNECTION	1		GROOVED
5	TANK DRAIN CONNECTION	1		GROOVED
6	SIDE MANWAY COVER	1		FIBERGLASS COVER
7	TOP MANHOLE COVER	1		FIBERGLASS COVER
8	COWL TYPE AIR VENT	1		VENT
9	EXTERNAL LADDER	1		LADDER
10	INTERNAL LADDER	1		SS LADDER
11	WATER LEVEL GUIDE	1		FLOAT AND BOARD TYPE

NOTES
1. ALLOW FOR A MINIMUM OF 2' CLEARANCE AROUND TANK FOUNDATION.
2. OVERFLOWS SHALL FLOW FREELY TO THE GROUND AND BE DIRECTLY ROUTED TO A DRAIN.

WATER STORAGE TANK SCHEDULE

TAG	USEABLE CAPACITY (GALLONS)	DIMENSIONS (L x W x H)	TYPE	MODEL	NOTES
ST-1	2500	8'-2" x 8'-2" x 6'-7"	FIELD BUILT BOLTED FIBERGLASS	FTC-2.5x2.5x2.0	1, 2, 3, 4, 5, 6, 7

NOTES
1. FOR TANK CONNECTIONS REFER TO STORAGE TANK DETAIL AND COORDINATION SCHEDULE.
2. TANK TO BE INSTALLED BY SUPPLIER.
3. TANK TO BE INSTALLED ON ENGINEERED STEEL BASE WITH MODULAR STEEL PEDESTAL FOOTING OR CONCRETE DUNNAGE. SEE DETAIL FOR PLATFORM INSTALLATION HEIGHT.
4. TANK MUST BE COMPLIANT WITH AWWA D12-121 AND NSF 61 WITHOUT A LINER.
5. SHEET MOLDING COMPOUND TO BE HOT PRESSED AT 300° F AND 3000 PSI.
6. TANK SEALANT TO BE A SOLID SYNTHETIC RUBBER SEALANT RIBBED IN NO LESS THAN 4 LOCATIONS.
7. ALL HARDWARE TO BE 316 STAINLESS STEEL.

12 BREAK TANK DETAIL
N.T.S

NOTE:
UPC COMPLIANCE

TANK CONNECTION DIMENSIONS SCHEDULE

NOMINAL SIZE	FLANGE DIAMETER (IN)	GROOVE DIMENSIONS (IN)			NOTES
		A	B	C	
2"	6.0	0.625	0.344	2.250	1, 2, 3
2-1/2"	7.0	0.625	0.344	2.750	1, 2, 3
3"	7.5	0.625	0.344	3.344	1, 2, 3
4"	9.0	0.625	0.344	4.334	1, 2, 3
5"	11.0	0.625	0.344	4.495	1, 2, 3
6"	13.5	0.750	0.469	6.441	1, 2, 3
10"	16.0	0.750	0.469	10.562	1, 2, 3

NOTES
1. FLANGE DIMENSIONS PER ANSI CLASS 150 B16.5 SLIP ON FLANGE.
2. GROOVED DIMENSIONS PER ORIGINAL GROOVE SYSTEM (OGS) GROOVE SPECIFICATIONS FROM VICTAULIC.
3. FLANGES TO BE PRE-INSTALLED ON FTC TANKS WITH GROOVED END BEING CONTRACTOR CONNECTION POINT.

TANK CONNECTION CONSTRUCTION NOTES
1. DRAWING SHOWS 4" NOMINAL SIZE DIMENSIONS. ALL VARIATION MAINTAIN THE SAME 9" DISTANCE SHOWN.
2. ISOMETRIC DRAWING IS NTS. 3D DRAWINGS AVAILABLE UPON REQUEST.

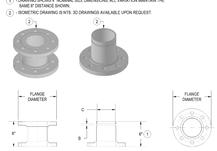

1 STANDARD TANK CONNECTION DETAIL
SCALE: NTS

OVERFLOW CONSTRUCTION NOTES
1. OVERFLOW VENT INSTALLED WITH SS BIRD AND INSECT SCREEN.
2. RECOMMENDED OVERFLOW PIPE FITTINGS TO BE INSTALLED USING VICTAULIC PGS-300 AND STYLE 357 RIGID COUPLINGS. SEE SPEC FOR APPROVED PIPE MATERIALS
3. OVERFLOW TO BE INSTALLED ON SITE BY CONTRACTOR. TANK WILL INCLUDE AN INSTALLED VICTAULIC GROOVED FITTING OVERFLOW CONNECTION POINT.
4. OVERFLOW TO BE FIELD ROUTED TO NEAREST FLOOR DRAIN, RECOMMENDED TO BE AS SHORT AS POSSIBLE.
5. TANKS SUPPORTS TO BE PROVIDED IF REQUIRED.

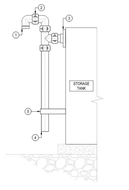

2 OVERFLOW DETAIL
SCALE: NTS

ANTI-VORTEX DIMENSIONS SCHEDULE

NOMINAL SIZE	FLANGE DIAMETER (IN)	VORTEX INHIBITOR DIA. (IN)	NOTES
2"	6.0	8.0	1
2-1/2"	7.0	9.0	1
3"	7.5	12.0	1
4"	9.0	16.0	1
6"	11.0	18.0	1
8"	13.5	20.0	1
10"	16.0	24.0	1

NOTES
1. FLANGE DIMENSIONS PER ANSI CLASS 150 B16.5 SLIP ON, PVC OR STEEL AVAILABLE

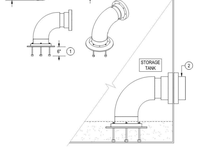

3 VORTEX CONNECTION DETAIL
SCALE: NTS

ANTI-VORTEXT CONSTRUCTION NOTES
1. ALL NPTS INSTALLED WITH 4" VORTEX INHIBITOR PLATE.
2. EXTERNAL CONNECTION TO BE AND FLANGED AS EITHER PVC OR STEEL FLANGE.

11 BREAK TANK CONNECTIONS
N.T.S

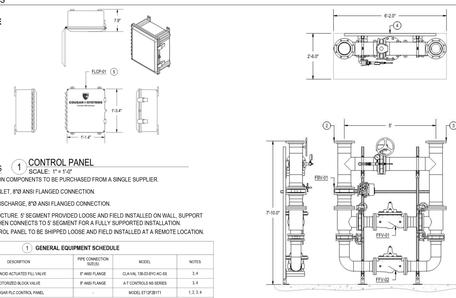

GENERAL NOTES
1. CONTROL PANEL
SCALE: 1" = 1'-0"
1. - ALL FILL STATION COMPONENTS TO BE PURCHASED FROM A SINGLE SUPPLIER.
2. - FILL STATION INLET, 8"Ø ANSI FLANGED CONNECTION.
3. - FILL STATION DISCHARGE, 8"Ø ANSI FLANGED CONNECTION.
4. - SUPPORT STRUCTURE. 5' SEGMENT PROVIDED LOOSE AND FIELD INSTALLED ON WALL. SUPPORT STRUCTURE THEN CONNECTS TO 5' SEGMENT FOR A FULLY SUPPORTED INSTALLATION.
5. - COUGAR CONTROL PANEL TO BE SHIPPED LOOSE AND FIELD INSTALLED AT A REMOTE LOCATION.

1 GENERAL EQUIPMENT SCHEDULE

TAG	DESCRIPTION	PIPE CONNECTION SIZE(S)	MODEL	NOTES
FFV-01, 02	SOLENOID ACTUATED FILL VALVE	8" ANSI FLANGE	CLA-VAL 136-03 8FC-4C-SS	3, 4
FBV-01	MOTORIZED BLOCK VALVE	8" ANSI FLANGE	AT CONTROLS NS SERIES	3, 4
FLCP-01	COUGAR PLC CONTROL PANEL		MODEL ETI12F3B1T1	1, 2, 3, 4

NOTES
1. LEVEL CONTROL DONE BY PRESSURE TRANSDUCER WITH BACK UP HIGH LEVEL PROBE. TANK LEVEL & SET POINTS DISPLAYED IN INCHES.
2. MONITOR CITY PRESSURE WITH PRESSURE TRANSMITTER.
3. START UP DONE BY SYSTEM SUPPLIER.
4. FIELD WIRING FROM CONTROL PANEL TO VALVES AND LEVEL SENSOR ASSEMBLY BY SYSTEM SUPPLIER

10 FILL STATION DETAILS
N.T.S

NOTES:
1. REFER TO SPECIFICATIONS FOR INSULATED PIPE RISER SUPPORTS.
2. COORDINATE RISER CLAMP ORIENTATION TO BE WITHIN WALL CAVITY.
3. INSTALL FIRE STOPPING MATERIAL PER MANUFACTURER'S RECOMMENDATION.
4. REFER TO ARCHITECTURAL DRAWING FOR FLOOR FIRE RATING.
5. INSULATED STEEL PIPE I.D. 6" OR LESS: UL SYSTEM NO. C-AJ-5077
6. UNINSULATED STEEL PIPE I.D. 6" OR LESS: UL SYSTEM NO. CA-AJ-1221

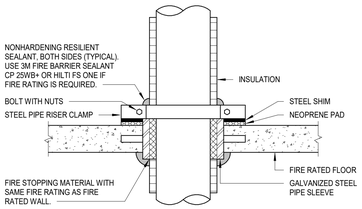

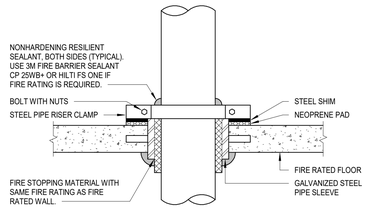

9 TYPICAL PIPE PENETRATION THROUGH FIRE RATED FLOOR
N.T.S.

NOTE:
ROOF HYDRANT SHALL NOT REQUIRE A DRAIN LINE FOR FROST PROTECTION. HYDRANT SHALL DRAIN INTO AN INTEGRAL STAINLESS CANISTER, BELOW THE ROOF LINE, TO PREVENT FREEZING

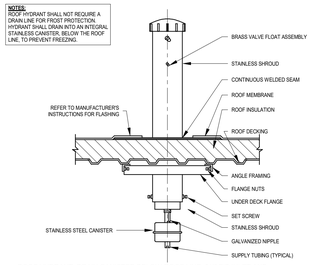

ROOF HYDRANT, DRAIN CANISTER BELOW ROOF LINE, 3/4" FIP INLET AND 3/4" OUTLET HOSE THREAD. 1" SCHEDULE 40 GALVANIZED RISER AND SELF ADJUSTING SOLID BRASS OPERATING ROD. MAPA PRODUCTS #MPH-24-FP. 3/4" COLD WATER. INSTALL WITH OUTLET AT 18" A.F.F OR AS DIRECTED BY ARCHITECT/ OWNER.

8 ROOF HYDRANT DETAIL
N.T.S

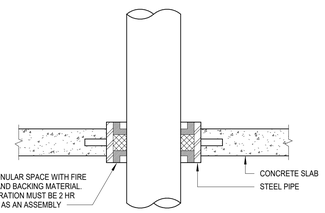

7 UNINSULATED PIPE FLOOR PENETRATION
N.T.S

NOTE:
UPC COMPLIANCE

SYMBOLS LEGEND
- ELECTRIC MOTORIZED BLOCK VALVE
- FILL STATION VALVE
- BUTTERFLY BYPASS VALVE
- ISOLATION VALVE
- PRESSURE GAUGE
- PRESSURE TRANSDUCER
- TEE

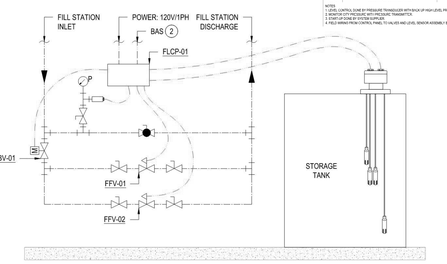

GENERAL NOTES
1. - ALL FILL STATION COMPONENTS TO BE PURCHASED FROM A SINGLE SUPPLIER.
2. - ALARMS TO BAS TO INCLUDE TANK HIGH, TANK LOW, AND WATER SUPPLY LOSS.

- - - -

PLUMBING RISER DIAGRAM
P-701
FOR BLUEBEAM LABELING/OCR:

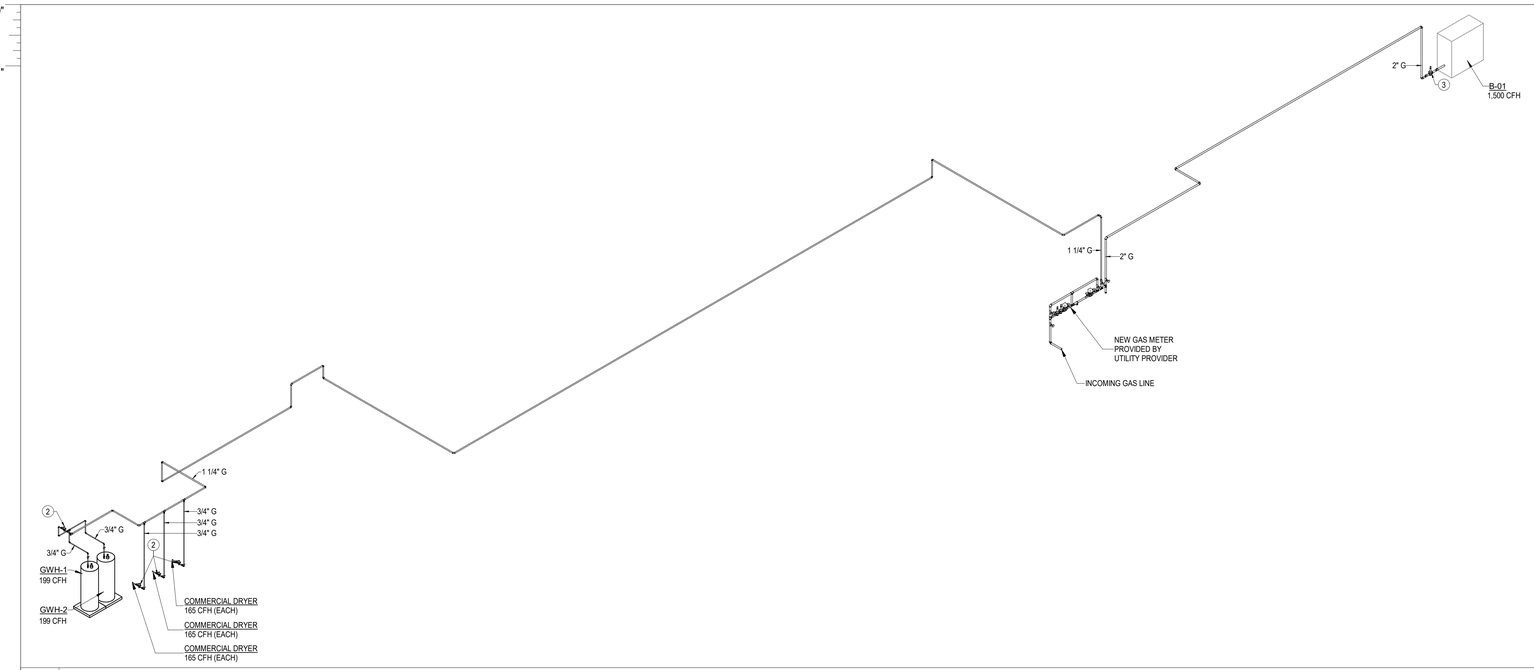

2 GAS RISER DIAGRAM
SCALE:

GAS LOAD ANALYSIS		
QUANTITY	EQUIPMENT	CFH
2	GWH-1,2	398
1	B-01	1,500
3	DRYERS	495
TOTAL GAS LOAD = (TOTAL * 0.15)		2,752
L(EQ) = 275 FT @ 5 PSI		

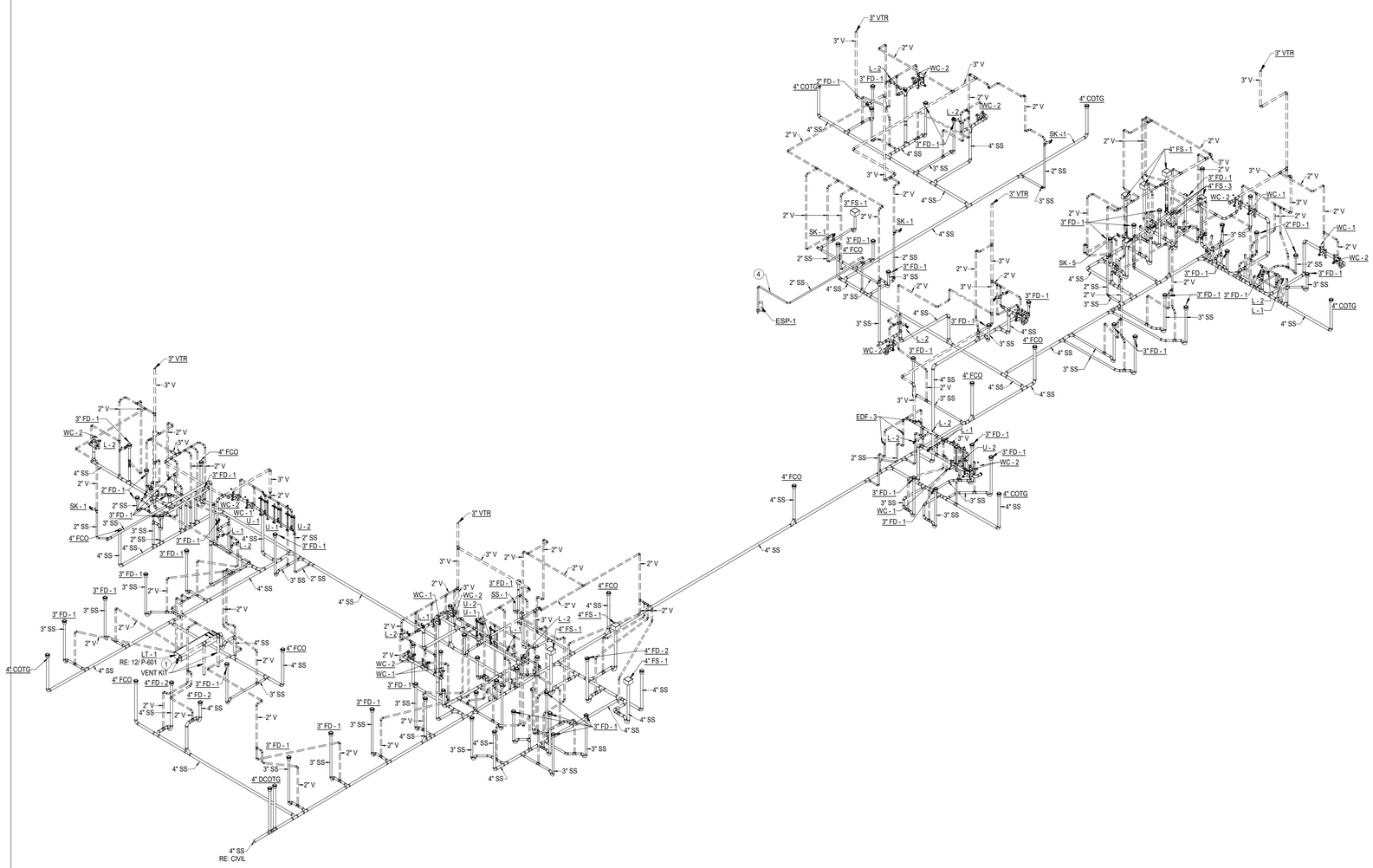

1 SANITARY WASTE AND VENT RISER DIAGRAM
SCALE:

GENERAL NOTES - PLUMBING PLAN

A. THE CONTRACTOR SHALL COMPLY WITH ALL AUTHORITIES HAVING JURISDICTION.

B. ALL FINAL CONNECTIONS TO FIXTURES AND EQUIPMENT SHALL BE MADE BY THE PLUMBING CONTRACTOR.

C. ALL PLUMBING PIPING SHALL BE COORDINATED WITH ALL OTHER TRADES PRIOR TO ANY INSTALLATION OF ALL PLUMBING FIXTURES AND EQUIPMENT BY THE PLUMBING CONTRACTOR.

D. ALL FLOOR DRAINS AND FLOOR SINKS SHOWN ON THIS DRAWING SHALL BE COORDINATED WITH ALL OTHER TRADES PRIOR TO INSTALLATION.

E. REFER TO ARCHITECTURAL DRAWING FOR EXACT LOCATIONS OF FIXTURES, EQUIPMENT, ETC. DO NOT SCALE FROM PLUMBING DRAWINGS.

F. ALL WALL CLEAN-OUTS SHALL BE ACCESSIBLE BY AN ACCESS PANEL.

G. PROVIDE AND INSTALL A DOUBLE EXTERIOR CLEAN-OUT (DFCO) ON ALL SANITARY LINES EXITING THE BUILDING.

H. ALL FLOOR DRAINS AND FLOOR SINKS SHALL BE PROVIDED WITH A TRAP PRIMER AND INSTALLED BY THE PLUMBING CONTRACTOR.

I. FIXTURES DESIGNATED AS ADA ACCESSIBLE BY ARCHITECT SHALL BE INSTALLED AT ADA ACCESSIBLE HEIGHT PER ARCHITECTURAL DETAILS.

J. ALL DOMESTIC COLD AND HOT WATER TAKE-OFFS SHALL HAVE AN ISOLATION SHUT-OFF VALVE.

K. FLOOR DRAINS AND FLOOR SINKS IN MECHANICAL ROOMS SHALL BE SET NOT LESS THAN 6" FROM HOUSEKEEPING PADS. RE: MECHANICAL DRAWINGS. DO NOT PLACE ON, OR IN, HOUSEKEEPING PAD, OR UNDERNEATH EQUIPMENT.

L. CONTRACTOR SHALL DEWATER ANY AREA AT OR BELOW GRADE PRIOR TO SETTING EQUIPMENT.

M. CONTRACTOR SHALL PROVIDE AND INSTALL A TRAP PRIMER, TP-1, AND A HOSE BIBB, HB-3, IN ALL MECHANICAL ROOMS.

N. CONTRACTOR SHALL PROVIDE AND INSTALL A HOSE BIBB WITH WHEEL HANDLE IN ALL MECHANICAL ROOMS, HB-3.

O. ANY AND ALL WATER PIPING EXPOSED TO OUTSIDE ELEMENTS SHALL BE INSULATED AND HEAT TRACED TO PREVENT FREEZING.

P. ALL SANITARY 3" OR ABOVE SHALL BE INSPECTED BY A CAMERA PRIOR TO SUBSTANTIAL COMPLETION.

Q. ALL RVB-1 SHALL HAVE FILTER.

KEYNOTES - PLUMBING PLAN

1 DOMESTIC GAS WATER HEATER AND CONCENTRIC VENT KIT SHALL BE PROVIDED BY PLUMBING CONTRACTOR. REFER TO PLUMBING DRAWINGS AND SPECIFICATIONS. PROVIDE 2" THICK, INSTALLED R-8, FIBERGLASS INSULATION FOR METAL INTAKE PIPING FOR CONDENSATION PREVENTION. REFER TO PLUMBING DETAILS FOR SEALED COMBUSTION CONCENTRIC VENT DETAIL. PROVIDE 4" WATER HEATER CONCENTRIC FLUE CAP (x2) AT EXTERIOR PENETRATION. CONTRACTOR SHALL REFER TO MANUFACTURER'S REQUIREMENTS FOR EXACT INSTALLATION NEEDS PRIOR TO COMMENCING ANY INSTALL WORK.

2 PROVIDE REGULATOR (STEP DOWN FROM 5 PSI TO 7"-14" W.C.) W/ SHUT-OFF VALVE ON EACH SIDE. CONTRACTOR SHALL COORDINATE EXACT EQUIPMENT INLET SIZE AND PRESSURE REQUIREMENTS PRIOR TO INSTALL. INDOOR GAS REGULATORS SHALL BE VENTED TO EXTERIOR AS REQUIRED.

3 PROVIDE REGULATOR (STEP DOWN FROM 5 PSI TO 7"-14" W.C.) W/ SHUT-OFF VALVE ON EACH SIDE. CONTRACTOR SHALL COORDINATE EXACT EQUIPMENT INLET SIZE AND PRESSURE REQUIREMENTS PRIOR TO INSTALL.

4 FORCED MAIN PIPING IS TYPE K COPPER, HARD DRAWN.

PBK
www.pbk.com
TX FIRM: BR 1608
HOUSTON, TX
713-365-0608
LEAF ENGINEERS

PKG 3A - GPHS NEW FIELDHOUSE

1000 Keene St.
Galena Park, TX 77547

CLIENT PROJECT NO: 240539

ISSUE FOR PROPOSAL

Galena Park ISD

KEY PLAN
NORTH: PLAN TRUE

STATE OF TEXAS
DONALD C. RICHARDS
61525
LICENSED
June 10, 2025
LEAF ENGINEERS
F-18672

CLIENT	
Galena Park ISD	
DATE	PROJECT NUMBER
June 10, 2025	240539

DRAWING HISTORY

No.	Description	Date

CHECKED BY: AA
DRAWN BY: AA/TN

PLUMBING RISER DIAGRAM

P-701

Plot Stamp:
6/6/2025 11:33:36 AM

TECHNOLOGY SYSTEM NOTES AND LEGENDS

T-001

FOR BLUEBEAM LABELINGOCR:

0"

1"

TECHNOLOGY SHEET INDEX

Sheet Number	Sheet Name
T-001	TECHNOLOGY SYSTEM NOTES AND LEGENDS
TS-101	TECHNOLOGY SITE PLAN
TF-101	1ST FLOOR FIRE ALARM PLAN
TF-102	2ND FLOOR FIRE ALARM PLAN
TN-101	1ST FLOOR TECHNOLOGY PLAN
TN-102	2ND FLOOR TECHNOLOGY PLAN
T-401	TECHNOLOGY ENLARGED
T-501	TECHNOLOGY RISER DIAGRAMS
T-701	TECHNOLOGY DETAILS
T-702	TECHNOLOGY DETAILS
T-703	TECHNOLOGY DETAILS - AV ONE-LINE DRAWINGS
T-704	TECHNOLOGY DETAILS - AV ONE-LINE DRAWINGS

FIRE ALARM LEGEND

GROUP	SYMBOL	DESCRIPTION
DEVICES		FOOT ADDED TO ANY SYMBOL INDICATES WALL MOUNTED.
	F	MANUAL FIRE ALARM PULL STATION. INSTALL AT 48" A.F.F. PROVIDE STOPPER II COVER WITH HORN.
	F	FIRE ALARM SPEAKER OR HORN. PROVIDE WEATHER RESISTANT MODELS FOR DEVICES INSTALLED ON THE EXTERIOR.
		COMBINATION SPEAKER / STROBE. PROVIDE WEATHER RESISTANT MODELS FOR DEVICES INSTALLED ON THE EXTERIOR. 'WP' SUBTEXT INDICATES WEATHER/WATER PROOF MODEL.
		VISUAL ALARM STROBE.
	S	SMOKE DETECTOR. NO SUBSCRIPT INDICATES IONIZATION TYPE; "P" INDICATES PHOTOELECTRIC TYPE; "D" INDICATES DUCT TYPE AND PHOTOELECTRIC.
	T	HEAT DETECTOR; COMBINATION RATE OF RISE AND FIXED TEMPERATURE. "F" INDICATES FIXED TEMPERATURE ONLY; "R" INDICATES RATE OF RISE ONLY. "C" INDICATES RATE COMPENSATION TYPE.
	CO	CARBON MONOXIDE DETECTOR.
	B	BEAM SMOKE DETECTOR. "T" INDICATES TRANSMITTER. "R" INDICATES RECEIVER.
	T	FIRE FIGHTER'S TELEPHONE JACK. "H" INDICATES PERMANENT EMERGENCY TELEPHONE HANDSET.
	R	AUXILIARY CONTROL RELAY. "2" INDICATES TWO RELAYS REQUIRED FOR FIRE FIGHTER OVERRIDE CONTROL.
	D	FIRE/SMOKE DUCT DAMPER WITH MOTOR ACTUATOR (BY DIV. 15). PROVIDE FIRE ALARM CONTROL RELAYS AND ADDRESSABLE MODULE.
	FTC	TERMINAL CABINET FOR FIRE ALARM SYSTEM WIRING.
	FACP	FIRE ALARM CONTROL PANEL. INSTALL AT 58" TO CENTER OF PANEL / 72" TO TOP OF PANEL.
	FAA	FIRE ALARM ANNUNCIATOR PANEL.
	FTR	FIRE ALARM TRANSPONDER.
	GV	SPRINKLER SYSTEM GATE VALVE MONITOR SWITCH.
	FS	SPRINKLER SYSTEM WATER FLOW SWITCH.
	TS	TAMPER SWITCH.
	CV	SPRINKLER SYSTEM ALARM CHECK VALVE.
	B	SPRINKLER SYSTEM ELECTRIC ALARM BELL.
	PA	SPRINKLER SYSTEM PRE-ACTION CONTROL PANEL.
	DH	DOOR HOLDER.
	MM	MONITOR MODULE

NOTE:
1. EVERY SYMBOL SHOWN ON LEGEND MAY NOT APPEAR ON DRAWINGS. REFER TO GENERAL ELECTRICAL NOTES FOR WALL-MOUNTED DEVICE MOUNTING HEIGHTS AND BACK BOX REQUIREMENTS.
2. REFERENCE SPECIFICATIONS FOR MATERIALS AND METHODS.
3. COMPLETE INSTALLATION OF ALL PRODUCTS SHALL BE IN COMPLIANCE WITH ALL CODES, INDUSTRY STANDARDS, COMMON PRACTICES AND MANUFACTURER'S INSTRUCTIONS.
4. CONTRACTOR SHALL PROVIDE BEAM SMOKE DETECTORS IN ALL HIGH CIELING AREAS AS REQUIRED BY CODE.

SEQUENCE OF OPERATIONS

1. WHEN A FIRE ALARM CONDITION IS DETECTED BY ANY OF THE SYSTEM ALARM INITIATING DEVICES THE CONTROL PANEL MUST RESPOND WITHIN 3 SECONDS, THE FOLLOWING FUNCTIONS OCCUR:
   - A. THE SYSTEM COMMON ALARM LED ON THE CPU MODULE SHALL FLASH. THE INTERNAL AUDIBLE TROUBLE DEVICE SHALL SOUND. ACKNOWLEDGEMENT OR SILENCING THE ALARM CONDITION SHALL SILENCE THE ALARM SIGNALS AND CAUSE FLASHING ALARM LED's TO ILLUMINATE STEADY.
   - B. AN BACK-LIT LCD DISPLAY SHALL INDICATE ALL APPLICABLE INFORMATION ASSOCIATED WITH THE ALARM CONDITION INCLUDING: ZONE, DEVICE TYPE, DIVIDE LOCATION AND TIME OF ALARM. LOCATION AND ZONING MESSAGES SHALL BE CUSTOM FIELD PROGRAMMED TO RESPECTIVE PREMISES. THE ALARM INFORMATION MUST BE STORED IN EVENT MEMORY FOR LATER REVIEW. EVENT MEMORY MUST BE AVAILABLE AT THE MAIN AND ALL REMOTE ANNUNCIATORS.
   - C. ANY REMOTE OR LOCAL ANNUNCIATOR LED's ASSOCIATED WITH THE ALARM ZONE SHALL BE ILLUMINATED AS HEREIN SPECIFIED.
   - D. A THREE CHANNEL DIGITAL ALARM COMMUNICATOR SHALL BE INTEGRALLY PROVIDED AND TRANSMIT TROUBLE AND ALARM SIGNALS TO AN APPROVED REMOTE STATION; (REMOTE STATION CONNECTION AND SERVICE PROVIDED BY OWNER).
   - E. WHEN THE ALARMED DEVICE IS RESTORED TO NORMAL, THE CONTROL PANEL SHALL BE REQUIRED TO BE MANUALLY RESET TO CLEAR THE ALARM CONDITION, EXCEPT THAT THE ALARMS MAY BE SILENCED AS PROGRAMMED.
   - F. AN ALARM SHALL BE SILENCED BY A CODE OR FIREFIGHTER KEY AT THE MAIN OR REMOTE ANNUNCIATORS. WHEN SILENCED, THIS SHALL NOT PREVENT THE RESOUNDING OF SUBSEQUENT EVENTS IF ANY OTHER EVENT SHOULD OCCUR, (SUBSEQUENT ALARM FEATURE). WHEN ALARMS ARE SILENCED THE SILENCED LED ON THE CONTROL PANEL AND ON ANY REMOTE ANNUNCIATORS SHALL REMAIN LIT UNTIL THE ALARMED DEVICE IS RETURNED TO NORMAL.
   - G. ALL AUTOMATIC EVENTS PROGRAMMED TO THE ALARM POINT SHALL BE EXECUTED AND THE ASSOCIATED INDICATING DEVICE AND/OR OUTPUTS ACTIVATED. AS EACH INDICATING CIRCUIT OR CONTROL RELAY IS ACTIVATED, ITS ASSOCIATED "ON" LED SHALL BE ILLUMINATED.
   - H. ACTIVATE ALL AUDIBLE/VISUAL ALARM DEVICES.
   - I. DE-ACTIVATE HVAC SYSTEMS OVER 2000 CFM IN AREA OF ALARM.
   - J. DISPLAY SYSTEM STATUS CHANGES ON THE REMOTE ANNUNCIATOR(S).
   - K. RELEASE ALL SMOKE DOOR, FIRE DOORS, FIRE COILING DOORS, FIRE SMOKE DAMPERS AND FIRE SHUTTERS.

GENERAL FIRE ALARM NOTES

1. ALL 120V POWER REQUIRED FOR THE FUNCTIONALITY OF THE FIRE ALARM SYSTEMS SHALL BE A DEDICATED CIRCUIT AND ON EMERGENCY POWER WHEN AVAILABLE. THE INSTALLING CONTRACTOR OF EACH SYSTEM SHALL BE RESPONSIBLE FOR PROVIDING THEIR OWN 120V POWER REQUIREMENTS FOR ALL REMOTE POWER SUPPLIES. THE GENERAL CONTRACTOR'S LICENSED ELECTRICAL SUBCONTRACTOR SHALL COORDINATE ELECTRICAL PANEL LOCATIONS AND AVAILABLE SPACE DEDICATED FOR THE CONTRACTOR'S SYSTEM REQUIREMENTS (TYPICAL) ELECTRICAL CONTRACTOR SHALL BE RESPONSIBLE FOR ALL POWER TOMAIN CONTROL PANELS AND ALL HEAD END EQUIPMENT. SYSTEM INSTALLERS SHALL COORDINATE LOCATION AND CONNECTION OF CONTROL PANEL AND HEAD END POWER WITH THE PROJECT'S ELECTRICAL CONTRACTOR.
2. UNLESS SPECIFICALLY INDICATED ON THE DRAWINGS OR OTHERWISE INSTRUCTED BY THE ARCHITECT OR AS NOTED IN NFPA, FIRE ALARM DEVICES SHALL HAVE THE FOLLOWING MOUNTING HEIGHTS. VERIFY EXACT HEIGHT WITH ARCHITECT. DIMENSIONS ARE TO CENTER OF BOX UNLESS OTHERWISE NOTED:
   - A. MANUAL FIRE PULL STATIONS - MOUNT AT 42" AFF TO THE TOP OF BOX.FOR FRONTAL WHEELCHAIR APPROACH; AND 48" AFF FOR SIDE WHEELCHAIR APPROACH. PULL STATIONS SHALL BE LOCATED THROUGHOUT THE PROTECTED AREA SO THAT THEY ARE UNOBSTRUCTED AND ACCESSIBLE; MOUNT WITHIN 5 FT. OF THE EXIT DOORWAY OPENING AT EACH EXIT ON EACH FLOOR; MOUNT ON BOTH SIDES OF GROUP OPENINGS OVER 40 FT. IN WIDTH.
   - B. FIRE ALARM AUDIBLE DEVICES - IF CEILING HEIGHTS ALLOW, WALL-MOUNTED APPLIANCES SHALL HAVE THEIR TOPS ABOVE THE FINISHED FLOORS AT HEIGHTS OF NOT LESS THAN 90 IN. AND BELOW THE FINISHED CEILINGS AT HEIGHTS OF NOT LESS THAN 6 IN. THIS REQUIREMENT SHALL NOT PRECLUDE CEILING-MOUNTED OR RECESSED APPLIANCES. COMPLY WITH NFPA 72, CHAPTER 4.
   - C. SOUND PRESSURE LEVEL SHALL EXCEED THE PREVAILING EQUIVALENT SOUND IN THE ROOM BY AT LEAST 15 dbA OR EXCEED ANY MAX SOUND LEVEL WITH A DURATION OF 60 SECONDS BY 5 dbA, WHICHEVER IS LOUDER. SOUND LEVELS FOR ALARM SIGNALS SHALL NOT EXCEED 120 dbA.
3. FIRE ALARM VISUAL DEVICES SHALL COMPLY WITH NFPA 72, CHAPTER 4.
   - A. VISUAL APPLIANCES CANDELA SHALL BE THE HIGHEST VALUE ALLOWED BY NFPA TABLE IN ORDER TO INSTALL THE FEWEST NUMBER OF STROBES.
   - B. THE LAMP SHALL BE XENON STROBE TYPE OR EQUIVALENT.
   - C. THE COLOR SHALL BE CLEAR OR NOMINAL WHITE.
   - D. THE MAX. PULSE DURATION SHALL BE TWO TENTHS OF ONE SECOND (0.2 SEC) WITH A MAX. DUTY CYCLE OF 40%. THE PULSE DURATION IS DEFINED AS THE TIME INTERVAL BETWEEN INITIAL AND FINAL POINTS OF 10% MAX. SIGNAL.
   - E. THE INTENSITY SHALL BE A MINIMUM 0F 75 CANDELA.
   - F. THE FLASH RATE SHALL BE A MIN. OF 1Hz AND MAX. OF 3Hz.
4. VISUAL APPLIANCES SHALL BE PLACED 80" ABOVE THE HIGHEST FLOOR LEVEL WITHIN THE SPACE OR 6" BELOW THE CEILING, WHICHEVER IS LOWER. CEILING MOUNTED WERE INDICATED.
5. AT A MINIMUM, VISUAL SIGNALS APPLIANCES SHALL BE PROVIDED IN BUILDINGS AND FACILITIES IN EACH OF THE FOLLOWING AREAS: HALLWAYS, LOBBIES, AND ANY OTHER GENERAL USAGE AREAS.
6. ALL EQUIPMENT AND WORK PERFORMED SHALL COMPLY WITH ALL OF THE CURRENT AND APPLICABLE CODES, RULES, ORDINANCES, REGULATIONS, AND STANDARDS AS INTERPRETED AND ENFORCED BY THE AUTHORITIES HAVING JURISDICTION.
7. PROVIDE POWER FOR REMOTE BATTERY SUPPLIES AND BOOSTER PANELS AS NEEDED. FIRE ALARM CONTRACTOR TO COORDINATE WITH ELECTRICAL CONTRACTOR FOR CIRCUIT.
8. ALL FIRE ALARM WIRING SHALL ROUTE DOWN CORRIDORS AND WALKWAYS PARALLEL AND PERPENDICULAR TO BUILDING WALLS.
9. ALL FIRE ALARM CABLING SHALL BE SUPPORTED IN DEDICATED CABLE SUPPORTS. DO NOT ROUTE IN OR TIE-WRAP DIRECTLY TO THE BUILDING'S STRUCTURE.
10. CONTRACTOR TO INSTALL RELAYS IN ALL KITCHEN HOOD ANSUL SYSTEMS TO NOTIFY MAIN FIRE ALARM PANEL UPON ACTIVATION.
11. ALL NOTIFICATION APPLIANCE CIRCUIT CABLES AND ALL OTHER FIRE ALARM SYSTEM CABLE SHALL HAVE A RED OUTER JACKET.
12. ELECTRICAL CONTRACTOR SHALL PROVIDE AND INSTALL ANY CONDUITS AND/OR BOXES REQUIRED FOR THE INSTALLATION FIRE ALARM DEVICES.
13. PROVIDE AND INSTALL PROTECTIVE BUSHINGS ON ALL STUB-OUTS AND SLEEVES TO PREVENT CABLE DAMAGE. BUSHINGS TO BE INSTALLED PRIOR TO CABLE INSTALLATION. CUTTING BUSHING AND INSTALLING AFTER CABLE IS INSTALLED WILL NOT BE ACCEPTED.
14. PROVIDE AND INSTALL STOPPER II PROTECTIVE COVERS WITH A LOCAL ALARM FOR ALL MANUAL PULL STATIONS ON THE ENTIRE PROJECT.
15. CONTRACTOR TO PROVIDE CEILING MOUNTED LED NOTIFICATION DEVICES WITH TEST BUTTON FOR ALL DUCT DETECTORS THAT ARE MOUNTED ABOVE CEILING AND/OR IN LOCATIONS NOT VISIBLE FROM THE FLOOR.
16. ALL FIRE ALARM DEVICES ARE NEW UNLESS NOTED OTHERWISE. CONTRACTOR TO CONNECT NEW DEVICES TO EXISTING FIRE ALARM PANEL IN CTE BUILDING MDF A114 AND CONFIGURE PANEL FOR NEW DEVICES AND LAYOUT.
17. CONTRACTOR SHALL PROVIDE AND INSTALL A RELAY FOR EACH FIRE/SMOKE DAMPER ON PROJECT. REFER TO MECHANICAL DRAWINGS FOR LOCATIONS.
18. CONTRACTOR SHALL PROVIDE DUCT DETECTORS ON ALL AIR HANDLING UNITS RATED ABOVE 2,000 CFM AND PER NFPA. PROVIDE DUCT DETECTORS IN BOTH THE HOT AND COLD DECK ON ALL OF THE AHU UNITS. REFER TO MECHANICAL DRAWINGS FOR QUANTITIES AND LOCATIONS OF ALL AHUs.
19. CONTRACTOR SHALL PROVIDE ALL CABLING AND DEVICES REQUIRED TO PROVIDE THE SHUT-DOWN OF ALL HVAC AIR HANDLING UNITS UPON THE FIRE ALARM SYSTEM ENTERING ALARM STATE AND START UP OF ALL AIR HANDLING UNITS UPON THE FIRE ALARM SYSTEM BEING RESET TO A NON-ALARM STATE.
20. CONTRACTOR SHALL PROVIDE ALL REQUISITE FIRE ALARM MODULES AND CABLING AS REQUIRED TO PROVIDE CONTROL OF THEATER / AUDITORIUM HOUSE LIGHTS IN ORDER TO BRING THE LIGHTS UP TO 100% IN AN ALARM EVENT. COORDINATE WITH OTHER TRADES.
21. PROVIDE MOUNTING SUPPORT FROM GRID OR BUILDING STRUCTURE FOR ALL DEVICES INSTALLED IN LAY-IN CEILING TILE.
22. ALL 120V POWER FOR THE SYSTEMS SHALL BE INSTALLED WITHIN THE ENCLOSURE OR INSTALLED IN CONDUIT CONNECTED TO THE ENCLOSURE SO THAT NO CABLING IS EXPOSED. MC CABLE, ROMEX, SO CABLES OR OTHER METHODS ARE NOT ACCEPTABLE.
23. CONTRACTOR SHALL PROVIDE SMOKE DETECTION DEVICES ABOVE ALL PARTIAL CEILING IN ALL CORRIDORS AND OTHER SPACES PER NFPA 72.

SECURITY SYSTEMS LEGEND

GROUP	SYMBOL	DESCRIPTION
DEVICES		INTERIOR PANASONIC I-PRO VIDEO SURVEILLANCE CAMERA. PROVIDE ALL REQUISITE MOUNTING HARDWARE. PROVIDE CEILING TILE BRIDGE FOR ALL CAMERAS INSTALLED IN LAY-IN CEILNG TILE. WALL MOUNTED (INDICATED WITH ADDED FOOT) CAMERAS INSTALLED AT 12' A.F.F. UNLESS OTHERWISE NOTED. PROVIDE SINGLE GANG BACK BOX WITH (1) 3/4" CONDUIT STUBBED OUT ABOVE NEAREST ACCESSIBLE CEILING WITH PULL STRING FOR WALL MOUNTED CAMERAS. CONTRACTOR SHALL PROVIDE (1) DATA DROP TO NEAREST IDF ROOM.
		EXTERIOR PANASONIC I-PRO WALL MOUNTED VIDEO SURVEILLANCE CAMERA INSTALLED AT 12' A.F.F. UNLESS OTHERWISE NOTED. PROVIDE ALL REQUISITE MOUNTING HARDWARE. PROVIDE SINGLE GANG BACK BOX WITH (1) 3/4" CONDUIT STUBBED OUT ABOVE NEAREST ACCESSIBLE CEILING WITH PULL STRING. CONTRACTOR SHALL PROVIDE (1) DATA DROP TO NEAREST IDF ROOM.
		WALL MOUNTED MOTION DETECTOR INSTALLED AT 12' A.F.F. UNLESS OTHERWISE NOTED. PROVIDE SINGLE GANG BACK BOX WITH (1) 3/4" CONDUIT STUBBED OUT ABOVE NEAREST ACCESSIBLE CEILING WITH PULL STRING.
		360 DEGREE CEILING MOUNTED MOTION DETECTOR.
	KP	INTRUSION DETECTION SYSTEM ARM/DISARM KEYPAD WITH LOCKING VANDAL RESISTANT COVER.
	PB	PANIC BUTTON TO BE MOUNTED UNDER COUNTER TOP
	CONT	BOSCH 9512G ACCESS CONTROL / INTRUSION DETECTION PANEL MOUNTED ON WALL IN MAIN DATA CLOSET. ELECTRICAL CONTRACTOR TO PROVIDE DEDICATED 120V CIRCUIT ON EMERGENCY POWER WITH SURGE PROTECTION TO EACH PANEL. PROVIDE (1) CATEGORY 6 CABLE FOR PANEL ROUTED THROUGH 1" PVC CONDUIT TO APPROPRIATE IDF RACK. COORDINATE WITH DISTRICT TECHNOLOGY DEPARTMENT FOR IP ADDRESS ASSIGNMENT AND NETWORK ACTIVATION. ENSURE COMPATIBILITY WITH EXISTING BOSCH SYSTEMS IN SCHOOL FROM CTE BUILDING MDF A114.
	CR	ACCESS CONTROL PROXIMITY CARD READER. MOUNT AT 42" A.F.F. PROVIDE ALTRONIX LPD FOR EACH CARD READER.
	DR	DOOR RELEASE BUTTON (TO BE CONNECTED TO DOOR INDICATED).
	DC	DOOR CONTACT. PROVIDE SURFACE MOUNT CONTACT ON ROLL-UP DOORS. PROVIDE DOOR CONTACT ON ALL ROOF HATCHES.
	VI	INDICATES VIDEO INTERCOM REMOTE STATION WITH INTEGRATED CARD READER. ASSOCIATED 'CR' SHALL BE MOUNTED ON THE FRONT SURFACE OF STATION. PROVIDE BACK-BOX FOR MULLION MOUNTING.
	VM	INDICATES VIDEO INTERCOM MASTER STATION
		CEILING MOUNTED GLASS BREAK DETECTOR.
		WALL MOUNTED GLASS BREAK DETECTOR. MOUNT AT 12'-0" A.F.F.

NOTE:
1. EVERY SYMBOL SHOWN ON LEGEND MAY NOT APPEAR ON DRAWINGS. REFER TO GENERAL ELECTRICAL NOTES FOR WALL-MOUNTED DEVICE MOUNTING HEIGHTS.
2. REFERENCE SPECIFICATIONS FOR MATERIALS AND METHODS.
3. COMPLETE INSTALLATION OF ALL PRODUCTS SHALL BE IN COMPLIANCE WITH ALL CODES, INDUSTRY STANDARDS, COMMON PRACTICES AND MANUFACTURER'S INSTRUCTIONS.

SECURITY GENERAL NOTES

1. ALL 120V POWER REQUIRED FOR THE FUNCTIONALITY OF THE ACCESS CONTROL, BURGLAR ALARM, AND SECURITY CAMERA SYSTEMS SHALL BE A DEDICATED CIRCUIT AND ON EMERGENCY POWER WHEN AVAILABLE. SECURITY CONTRACTOR SHALL COORDINATE ALL 120V POWER REQUIREMENTS AND LOCATIONS WITH ELECTRICAL CONTRACTOR FOR ALL EQUIPMENT AND REMOTE POWER SUPPLIES (TYPICAL)
2. A DOOR CONTACT POSITION SENSOR IS REQUIRED AT ALL ROOF HATCHES (TYPICAL).
3. ELECTRICAL CONTRACTOR IS RESPONSIBLE FOR ALL NECESSARY CONDUIT, SLEEVES, AND PROTECTIVE BUSHINGS REQUIRED TO INSTALL COMPLETE SECURITY SYSTEM. PROVIDE ALL CONDUITS REQUIRED AT EXTERIOR DOORS ANNOTATED WITH DOOR CONTACTS OR CARD READERS TO ALLOW FOR INSTALLATION OF DOOR CONTACT POSITION SENSORS AND CARD READERS.
4. SECURITY CONTRACTOR IS RESPONSIBLE FOR CONNECTING SYSTEM TO DISTRICT'S REMOTE MONITORING SERVICE.
5. ALL EXPOSED SECURITY SYSTEMS WIRING OR WIRING ROUTING ACROSS NON ACCESSIBLE CEILINGS SHALL BE ROUTED IN CONDUIT. SIZE CONDUIT AS REQUIRED TO ROUTE SYSTEMS WITH 40% CABLE FILL RATIO. MINIMUM CONDUIT SIZE SHALL BE 3/4"
6. PROVIDE PROTECTIVE COVER FOR ALL DEVICES IN GYMNASIUM AREAS.
7. ENSURE ALL EXTERIOR WALL PENETRATIONS ARE PROPERLY SEALED TO PREVENT ELEMENTS FROM ENTERING BUILDING.
8. NO CONDUITS OR SEAL-TITE SHALL BE INSTALLED ON THE EXTERIOR OF THE BUILDING.
9. ALL LOW VOLTAGE CABLING SHALL BE INDIVIDUALLY ROUTED TO HEAD END POINT AND SUPPORTED IN PROPER CABLE SUPPORT SYSTEM FOR ENTIRE LENGTH OF RUN.
10. ALL EXTERIOR CAMERAS SHALL BE MOUNTED 12' ABOVE FINISHED GRADE UNLESS OTHERWISE INDICATED.
11. ALL CONDUIT STUB OUTS AND SLEEVES SHALL HAVE PROTECTIVE BUSHINGS TO PREVENT CABLE DAMAGE. BUSHING TO BE INSTALLED PRIOR TO CABLE INSTALLATION. CUTTING BUSHING AND INSTALLING AFTER CABLE IS INSTALLED WILL NOT BE ACCEPTED.
12. CONTRACTOR SHALL CONNECT FREEZER/COOLER SENSORS TO INTRUSION DETECTION HEAD-END FOR EVENT DETECTION. PROVIDE ALL REQUIRED MODULES TO INTERFACE SENSORS.
13. CONTRACTOR SHALL PROVIDE ALL VIDEO SURVEILLANCE CAMERA MOUNTS AND MOUNTING HARDWARE. COORDINATE WITH OWNER FOR FINAL INSTALLATION LOCATION PRIOR TO ROUGH-IN. PROVIDE CAMERA FIELD OF VIEW ADJUSTMENTS. COORDINATE WITH OWNER.
14. CONTRACTOR SHALL INTEGRATE THE INSTRUSION DETECTION SYSTEM WITH THE ACCESS CONTROL SYSTEM TO PROVIDE THE FUNCTIONALITY OF THE BURGLAR ALARM BEING DISARMED ON AN AUTHORIZED CARD SWIPE AT ANY CARD READER.
15. CONTRACTOR SHALL INTEGRATE THE ACCESS CONTROL, INTRUSION DETECTION AND VIDEO SURVEILLANCE SYSTEMS. PROVIDE ALL REQUIRED MODULES, CABLING AND LICENSES.
16. PROVIDE MOUNTING SUPPORT FROM GRID OR BUILDING STRUCTURE FOR ALL DEVICES INSTALLED IN LAY-IN CEILING TILE.
17. ALL 120V POWER FOR THE SYSTEMS SHALL BE INSTALLED WITHIN THE ENCLOSURE OR INSTALLED IN CONDUIT CONNECTED TO THE ENCLOSURE SO THAT NO CABLING IS EXPOSED. MC CABLE, ROMEX, SO CABLES OR OTHER METHODS ARE NOT ACCEPTABLE.

INTERCOM AND CLOCK LEGEND

NOTE: BASIS OF DESIGN IS BASED OFF OF RAULAND TELECENTER U COMPATIBLE DEVICES. CONTRACTOR SHALL PROVIDE TELECENTER U COMPATIBLE DEVICES. NO EXCEPTIONS.

GROUP	SYMBOL	DESCRIPTION
DEVICES	S	INDICATES INTERCOM SPEAKER, FLUSH MOUNTED IN CEILING. SPEAKERS ARE IP SPEAKERS. PROVIDE (1) DATA CABLE ROUTED TO NEAREST IDF EXCEPT AS NOTED: ALL CORRIDOR, PUBLIC SPACE AND EXTERIOR SPEAKERS ARE CONVENTIONAL 25VOLT AND DO NOT REQUIRE A DATA DROP. COORDINATE WITH INTERCOM CONTRACTOR PRIOR TO CABLING
	S	INDICATES WALL MOUNTED INTERCOM SPEAKER. PROVIDE (1) DATA CABLE ROUTED TO NEAREST IDF EXCEPT AS NOTED: ALL CORRIDOR, PUBLIC SPACE AND EXTERIOR SPEAKERS ARE CONVENTIONAL 25VOLT AND DO NOT REQUIRE A DATA DROP. COORDINATE WITH INTERCOM CONTRACTOR PRIOR TO CABLING
	VC	INTERCOM SPEAKER VOLUME CONTROL. FLUSH MOUNTED IN WALL. 2 GANG EXTRA DEEP BACK BOX WITH SINGLE GANG REDUCER RING AT PROJECT SWITCH HEIGHT WITH (1) 3/4" CONDUIT STUBBED OUT ABOVE ACCESSIBLE CEILING IN SAME ROOM.
	IOB	INTERCOM CALL BUTTON, FLUSH MOUNTED IN WALL. 2 GANG EXTRA DEEP BACK BOX WITH SINGLE GANG REDUCER RING AT PROJECT SWITCH HEIGHT WITH (1) 3/4" CONDUIT STUBBED OUT ABOVE ACCESSIBLE CEILING IN SAME ROOM.
	xxx	INTERCOM COMMUNICATIONS CONTROL SYSTEM HANDSET. "ACS" INDICATES ADMINISTRATOR CONTROL SYSTEM HANDSET. "MCS" INDICATES MASTER CONTROL SYSTEM HANDSET. "RCS" INDICATES RESCUE AREA CONTROL SYSTEM HANDSET. 2 GANG EXTRA DEEP BACK BOX WITH SINGLE GANG REDUCER RING AT PROJECT SWITCH HEIGHT WITH (1) 3/4" CONDUIT STUBBED OUT ABOVE ACCESSIBLE CEILING IN SAME ROOM.
	C	SINGLE FACE DIGITAL CLOCK. 2 GANG EXTRA DEEP BACK BOX WITH SINGLE GANG REDUCER RING AT PROJECT CLOCK HEIGHT WITH (1) 3/4" CONDUIT STUBBED OUT ABOVE NEAREST ACCESSIBLE CEILING. (1) CAT6 CABLE TO NEAREST IDF.
	C C	DOUBLE FACE DIGITAL CLOCK. 2 GANG EXTRA DEEP BACK BOX WITH SINGLE GANG REDUCER RING AT PROJECT CLOCK HEIGHT WITH (1) 3/4" CONDUIT STUBBED OUT ABOVE NEAREST ACCESSIBLE CEILING. (2) CAT6 CABLES TO NEAREST IDF.

NOTE:
1. EVERY SYMBOL SHOWN ON LEGEND MAY NOT APPEAR ON DRAWINGS. REFER TO GENERAL ELECTRICAL NOTES FOR WALL-MOUNTED DEVICE MOUNTING HEIGHTS.
2. REFERENCE SPECIFICATIONS FOR MATERIALS AND METHODS.
3. COMPLETE INSTALLATION OF ALL PRODUCTS SHALL BE IN COMPLIANCE WITH ALL CODES, INDUSTRY STANDARDS, COMMON PRACTICES AND MANUFACTURER'S INSTRUCTIONS.
4. PROVIDE CLEAR POLYCARBONATE COVER OR WIREGUARD ON ALL DEVICES INSTALLED IN GYMNASIUMS.

TECHNOLOGY PLAN GENERAL NOTES

1. ALL 120V POWER REQUIRED FOR THE FUNCTIONALITY OF THE TELECOMMUNICATION, NETWORK, AUDIO/VIDEO, SECURITY AND FIRE ALARM EQUIPMENT SHALL BE A DEDICATED CIRCUIT AND ON EMERGENCY POWER WHERE POSSIBLE. CONTRACTOR SHALL COORDINATE AND INSTALL ALL 120V POWER REQUIREMENTS AND LOCATIONS AS REQUIRED FOR ALL EQUIPMENT (TYPICAL).
2. CONTRACTOR SHALL COORDINATE WITH THE TECHNOLOGY CONSULTANT PRIOR TO THE INSTALLATION OF RACKS AND RACK EQUIPMENT. NO RACKS SHALL BE PERMANENTLY INSTALLED WITHOUT WRITTEN APPROVAL OF THE TECHNOLOGY CONSULTANT.
3. THE PROJECT'S ELECTRICAL CONTRACTOR SHALL BE RESPONSIBLE FOR ALL CONDUITS, PULL STRINGS, BACK BOXES AND SLEEVES REQUIRED FOR DEVICES AND PATHWAYS SHOWN ON THE FLOOR PLANS AND DETAIL SHEETS. ANY ADDITIONAL CONDUITS, SLEEVES, AND RACEWAY REQUIREMENTS FOR EACH SYSTEM SHALL BE THE RESPONSIBILITY OF EACH SYSTEM INSTALLER. NOTE THAT CONTRACTOR SHALL NOT BE RESPONSIBLE FOR THE TECHNOLOGY CONDUIT AND BACKBOXES ON AND DOWN THE CHASE OF PREFABRICATED DIRTT WALL SYSTEMS.
4. THE SELECTED, INSTALLING CONTRACTOR MUST BE A CERTIFIED INTEGRATOR/INSTALLER AUTHORIZED BY THE SPECIFIED SYSTEM MANUFACTURER TO INSTALL THE CABLE PLANT AND CONNECTIVITY PRODUCTS. REFER TO SPECIFICATIONS FOR PRODUCT TYPE AND DESCRIPTION.
5. SYSTEM WIRING AND EQUIPMENT INSTALLATION SHALL BE IN ACCORDANCE WITH ENGINEERING BEST PRACTICES AS ESTABLISHED BY ANSI/EIA/TIA, BICSI, AND THE NEC.
6. ALL WIRING SHALL MEET ALL STATE AND LOCAL ELECTRICAL CODES.
7. ALL TELECOMMUNICATIONS SYSTEMS EQUIPMENT AND MOUNTING LOCATIONS SHALL BE IN COMPLIANCE WITH ADA ACCESSIBILITY STANDARDS.
8. ALL DATA CABLES ARE TO BE INSTALLED WITH A MINIMUM OF 12 INCHES OF SEPARATION FROM AC POWER CABLES AND ALL OTHER LOW VOLTAGE CABLING IN ANY PARALLEL OPEN WIRE RUN.
9. ALWAYS CROSS OTHER SYSTEM CABLES AT A 90 DEGREE ANGLE.
10. ALL CABLES AND TERMINATION COMPONENTS SHALL BE MACHINE LABELED AT BOTH ENDS. LABEL ALL CABLES PER THE TECHNOLOGY DRAWINGS AND/OR SPECIFICATIONS. FINAL CABLE/OUTLET IDENTIFICATION LABELS SHALL BE COORDINATED WITH THE OWNER AND CONSULTANT.
11. CONTRACTOR TO PROVIDE LIGHTNING PROTECTION ON ALL COMMUNICATION CABLE BETWEEN BUILDINGS AND EXTERIOR MOUNTED DEVICES.
12. ALL EXPOSED CABLING ROUTED IN PLENUM SHALL BE PLENUM-RATED. ALL NON PLENUM-RATED CABLING INSTALLED IN PLENUM SPACES SHALL BE INSTALLED IN CONDUIT.
13. NO TERMINATION OR SPLICES SHALL BE INSTALLED IN OR ABOVE CEILINGS UNLESS NOTED OTHERWISE.
14. CONTRACTOR SHALL MAINTAIN WALL RATING WITH PROPER FIRE BLOCKING METHODS.
15. CONTRACTOR SHALL ROUTE ALL LOW VOLTAGE CABLING DOWN CORRIDORS AND PERPENDICULAR OR PARALLEL TO BUILDING WALLS. ENTER INTO ALL ROOMS FROM THE CORRIDOR ABOVE THE MAIN DOORWAY.
16. ALL COMMUNICATION CABLE INSTALLED SHALL ROUTE TO THE CENTER OF THE ROOM IN WHICH IT SERVES AND THEN TO THE OUTLET LOCATION IT IS INTENDED FOR. EACH CABLE SHALL HAVE A 10' SERVICE LOOP AT THE CENTER OF EACH ROOM AND A 3' SERVICE LOOP ABOVE EACH OUTLET LOCATION.
17. THE SYSTEM INSTALLER SHALL PROPERLY SUPPORT ALL INSTALLED SYSTEM CABLING FROM A PANDUIT J-MOD CABLE SUPPORT SYSTEM OR OTHER SUPPORT SYSTEM AS DETAILED IN SPECIFICATIONS. NO CABLING SHALL BE ROUTED AND TIED DIRECTLY TO BUILDING STEEL, CEILING GRID SUPPORT, CONDUIT, PIPING, OR DUCTWORK. CABLING SUPPORT SYSTEM SHALL BE DIRECTLY CONNECTED TO THE BUILDING'S STEEL JOIST. WHERE THE BOTTOM OF JOIST IS MORE THAN 2' ABOVE THE CEILING, THE SYSTEM INSTALLER SHALL PROVIDE AND INSTALL THREADED ROD AND ALL REQUIRED MATERIALS TO CONNECT THE ROD TO BUILDING STEEL AND THE CABLE SUPPORT SYSTEM TO THE THREADED ROD. CABLE PATHWAY SHALL NOT BE HIGHER THAN 5' ABOVE THE CEILING IN ANY LOCATION.
18. ALL EXPOSED CABLING OR CABLING ROUTING ACROSS NON-ACCESSIBLE CEILINGS SHALL BE INSTALLED IN CONDUIT. CONDUIT SHALL BE PROPERLY SIZED TO MAINTAIN THE 40% FILL RATIO.
19. ALL CONDUIT STUB OUTS AND SLEEVES SHALL HAVE PROTECTIVE BUSHINGS TO PREVENT CABLE DAMAGE. BUSHING TO BE INSTALLED PRIOR TO CABLE INSTALLATION. CUTTING BUSHING AND INSTALLING AFTER CABLE IS INS

TECHNOLOGY SITE PLAN
TS-101
FOR BLUEBEAM LABELING/OCR:

0"
1"

1 TECHNOLOGY SITE PLAN
SCALE: 1" = 30'-0"

TECHNOLOGY SITE PLAN GENERAL NOTES

A. REFERENCE SPECIFICATIONS FOR MATERIALS AND METHODS.

B. ALL CONDUITS AND PULL BOXES SHALL BE PROVIDED AND INSTALLED BY ELECTRICAL CONTRACTOR.

C. PROVIDE PULL BOX EVERY 250' AND / OR 270 DEGRESS OF RADIUS.

D. ALL IN-GROUND PULL BOXES SHALL BE EQUIPPED WITH A 48" DEEP GRAVEL DRY WELL TO ALLOW FOR DRAINAGE. SEE CIVIL PLANS FOR DETAILS.

E. ALL DATA AND TELECOM UNDERGROUND CONDUITS SHALL BE AT 4 FT. BELOW GRADE IF OPEN TRENCH DUG OR 8 FT. BELOW GRADE IF BORING MACHINE IS USED.

F. PROVIDE BORING OR SAWCUT AND BACKFILL. VERIFY WITH ARCHITECT THE PREFERRED METHOD.

G. PROVIDE SITE VERIFICATION XRAY OF EXISTING INFRASTRUCTURE TO AVOID DAMAGE OF EXISTING DRAINAGE AND OTHER INFRASTRUCTURES. CONTRACTOR LIABLE FOR DAMAGE TO EXISTING INFRASTRUCTURE.

H. ALL CONDUIT PATHWAYS AND PULL BOX LOCATIONS SHOWN ON DRAWINGS ARE APPROXIMATE. CONTRACTOR SHALL VERIFY PROPER PATHWAY PRIOR TO INSTALLATION OR UTILIZE EXISTING PATHWAYS. ALL EXISTING PATHWAYS SHOULD BE UP TO NEC 2023 STANDARDS PRIOR TO PULLING FIBER THROUGH.

I. STUB OUT ALL UNDERGROUND CONDUITS INSIDE MDF / IDF ROOMS AT 8 IN. A.F.F.

J. CONTRACTOR IS LIABLE FOR DAMAGE TO ALL EXISTING CABLING, SYSTEMS AND UTILITIES THAT ARE TO REMAIN.

K. TECHNOLOGY CABLING CONTRACTOR SHALL SEAL ALL OPEN CONDUIT ENDS WITH A PERMAGUM SEALING COMPOUND / GUM AFTER CABLING IS INSTALLED.

L. ALL CABLING INSTALLED IN PLENUM SPACES SHALL BE PLENUM RATED OR INSTALLED IN EMT CONDUIT AFTER 50 FEET UPON ENTRANCE INTO THE PLENUM SPACE, OR, THE NON-PLENUM RATED CABLING SHALL BE SPLICED IN AN ENCLOSURE WITH PLENUM RATED CABLING AND EXTENDED TO THE NEAREST IDF / MDF.

M. PROVIDE LIGHTNING PROTECTION / POWER SURGE PROTECTION / BUILDING ENTRANCE TERMINALS AND PROPER GROUNDING AND BONDING ON ALL METALLIC CABLING ENTERING THE BUILDING FROM AN EXTERIOR, SEPARATE STRUCTURE OR LOCATION.

N. PROVIDE 2 QTY. 2" CONDUITS FROM THE MDF TO EACH IDF.

TECHNOLOGY SITE PLAN KEYED NOTES

1. INDICATES APPROXIMATE LOCATION OF IDF 1960 ON SECOND FLOOR.

2. INDICATES APPROXIMATE LOCATION OF PARTIALLY EXISTING BELOW-GRADE CONDUIT PATHWAY TO FIELD HOUSE ON PLAN NORTH SIDE OF TRACK. PROVIDE FIBER PATHWAY TO EXISTING CTE BUILDING MDF 1807 THROUGH BELOW-GRADE CONDUIT PATHWAY. INDICATED PULL BOXES ARE DIAGRAMMATIC IN NATURE AND DO NOT DEPICT EXACT LOCATIONS. FIELD VERIFY PRIOR TO INSTALLATION. PROVIDE (2) MAXCELL 3-CELL INNERDUCT IN CONDUIT THAT SHALL HOUSE FIBER PATHWAYS. CONTRACTOR SHALL PROVIDE PROPER GROUNDING OF FIBER CABLE ARMORED JACKET.

3. PROVIDE (1) 12-STRAND SINGLE-MODE FIBER CABLE ROUTED THROUGH NEWLY CONSTRUCTED FIELD HOUSE PLENUM AND CTE FIRST FLOOR PLENUM ACCORDING TO SPECIFIED MATERIALS AND METHODS. PATHWAY SHALL RUN FROM IDF 1960 IN NEW FIELD HOUSE TO CTE BUILDING MDF 1807.

4. INDICATES APPROXIMATE LOCATION FOR STUBBED OUT 2" CONDUIT AT 1ST FLOOR PLENUM SPACE THAT SHALL LAND IN A NEMA4 8X8X4 PULL BOX MOUNTED ON THE BUILDING SURFACE AND ROUTED INTO BELOW-GRADE CONDUIT RUN. COORDINATE WITH ELECTRICAL CONTRACTOR AND ARCHITECT ON EXACT LOCATIONS PRIOR TO ROUGH-IN.

5. CONTRACTOR SHALL PROVIDE BUILDING ENTRY/EXIT OF FIBER PATHWAY AT LOWEST POINT TO ENTER THE MOST ACCESSIBLE COLUMN. COORDINATE WITH PROPER TRADES TO INSTALL BRUSHED STAINLESS STEEL ACCESS PANEL DOOR ON INTERIOR SIDE OF COLUMN FOR VERTICAL ROUTING THROUGH OPEN COLUMN SPACE OF FIBER TO PLENUM IN 2-STORY HALLWAY. FIBER SHALL RUN ACROSS OPEN HALLWAY PLENUM SPACE WITH ADEQUATE SUPPORT AND SHALL DROP BACK DOWN TO FIRST FLOOR PLENUM FOR ROUTING TO MDF 1807. COORDINATE WITH SCHOOL DISTRICT AND ARCHITECT PRIOR TO ROUGH-IN.

6. ENTER BRICK VENEER AS LOW AS POSSIBLE WHILE PROVIDING ACCESS INTO COLUMN WALL SPACE WITH 8X8X4 WEATHER RESISTANT PULL BOX THAT SHALL BE SURFACE MOUNTED ON BRICK VENEER AND PAINTED TO MATCH FINISH FOR BLENDING. COORDINATE WITH ELECTRICAL CONTRACTOR AND ARCHITECT ON EXACT LOCATIONS PRIOR TO ROUGH-IN.

7. PROVIDE 2 QTY. 2" CONDUITS ROUTED BELOW GRADE. PROVIDE NYLON PULL STRING IN CONDUITS.

8. PROVIDE 24"X24"X24" CONCRETE PULL BOX INSTALLED FLUSH WITH GRADE FOR TELECOM SYSTEMS. PROVIDE EVERY 250' OR CHANGES OF DIRECTION MORE THAN 180 DEGREES. PROVIDE WIDE SWEEPING TURNS ON ALL CONDUIT ENTERING AND EXITING BOX AS WELL AS CONDUIT TURNS ALONG ROUTE. PULL BOX SHALL BE RATED FOR THE TERRAIN IN WHICH IT SHALL BE INSTALLED. DO NOT INSTALL PULL BOXES IN SIDEWALKS. PULL BOXES INSTALLED IN PARKING LOTS OR DRIVEWAYS MUST BE RATED FOR SUCH AN ENVIRONMENT. VERIFY PROPER LOCATIONS PRIOR TO INSTALLATION. TYPICAL FOR ALL LOCATIONS SHOWN.

PBK
www.pbk.com
TX FIRM: BR 1608
HOUSTON, TX
713-965-0608
LEAF ENGINEERS

PKG 3A - GPHS NEW FIELDHOUSE

1000 Keene St.
Galena Park, TX 77547

CLIENT PROJECT NO: 240539

ISSUE FOR PROPOSAL

Galena Park ISD
GP
PROUDLY PUBLIC IN ALL FOR ALL

KEY PLAN
NORTH: PLAN TRUE

STATE OF TEXAS
DONALD C. RICHARDS
61525
LICENSED
PROFESSIONAL ENGINEER
June 10, 2025
LEAF ENGINEERS
F-18672

CLIENT	
Galena Park ISD	
DATE June 10, 2025	PROJECT NUMBER 240539

DRAWING HISTORY

No.	Description	Date

CHECKED BY: Checker
DRAWN BY: REN

TECHNOLOGY SITE PLAN

TS-101

Plot Stamp:
6/6/2025 10:31:46 AM

1ST FLOOR FIRE ALARM PLAN
TF-101
FOR BLUEBEAM LABELING/OCR:

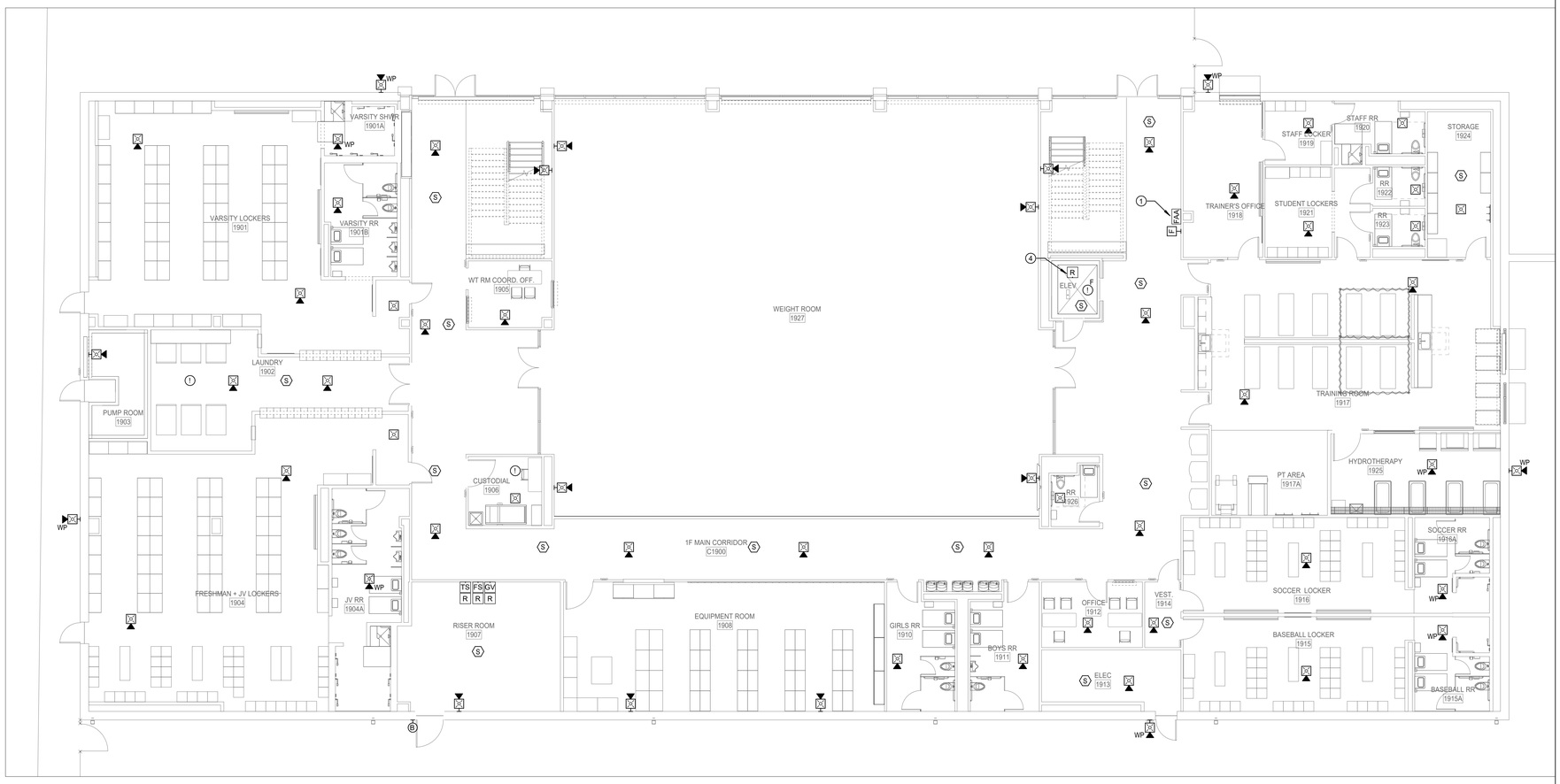

1 1ST FLOOR FIRE ALARM PLAN
SCALE: 1/8" = 1'-0"

FIRE ALARM PLAN GENERAL NOTES

A. BASIS OF DESIGN IS REMOTE ANNUNCIATOR PANEL THAT SHALL INTERCONNECT TO HEADEND FACP IN MDF A114 INSIDE OF CTE BUILDING. CONTRACTOR SHALL SUPPLY ALL REQUISITE POWER SUPPLIES TO CREATE CODE-COMPLIANT AND COMPLETELY FUNCTIONAL SYSTEM.

B. REFER TO SPECIFICATIONS FOR MATERIALS AND METHODS

C. DEVICE LOCATIONS AND QUANTITIES SHOWN ON DRAWINGS ARE APPROXIMATE. CONTRACTOR SHALL PROVIDE A COMPLETE AND CODE COMPLIANT FIRE ALARM SYSTEM PER IBC, IFC, NFPA 72 AND AHJ REQUIREMENTS.

D. VERIFY PROPER LOCATION OF DEVICES PRIOR TO INSTALLATION.

E. ELECTRICAL CONTRACTOR SHALL REFERENCE ARCHITECTURAL DRAWINGS FOR ACOUSTIC PANEL LOCATIONS AND ARTISTIC PAINT / MURAL LOCATIONS PRIOR TO ROUGH IN OF BACK BOXES TO ENSURE THERE ARE NO CONFLICTS.

F. PROVIDE WEATHERPROOF DEVICES IN ALL EXTERIOR, HIGH HUMIDITY AND WET AREAS (FREEZER / COOLER, SHOWERS, ETC.).

G. PROVIDE WIREGUARDS OR CLEAR POLYCARBONATE COVERS ON DEVICES INSTALLED IN WEIGHT ROOM 1927.

H. PROVIDE A RELAY AT EVERY LOCAL SOUND RACK IN THE PROJECT TO PROVIDE FOR MUTING OR SHUT DOWN OF LOCAL SOUND SYSTEM IN AN ALARM EVENT. ROUTE FIRE ALARM CABLING INTO THE LOCAL SOUND RACK. COORDINATE WITH LOCAL SOUND CONTRACTOR.

I. REFER TO ARCHITECTURE SHEETS A-101 AND A-102 FOR INDICATION OF LOCATION OF DIRTT MODULAR WALLS.

FIRE ALARM PLAN KEYED NOTES

1. INDICATES APPROXIMATE LOCATION OF FIRE ALARM REMOTE ANNUNCIATOR PANEL THAT SHALL ROUTE TO HEADEND FACP IN MDF A114 INSIDE OF CTE BUILDING.

2. INDICATES APPROXIMATE LOCATION OF ELEVATOR KNOX BOX BY OTHERS

4. CONTRACTOR SHALL PROVIDE QUANTITY REQUIRED BY CODE.

PBK
HOUSTON, TX 713-965-6608
TX FIRM: BR 1608
www.pbk.com

LEAF ENGINEERS

PKG 3A - GPHS NEW FIELDHOUSE

1000 Keene St,
Galena Park, TX 77547

CLIENT PROJECT NO: 240539

ISSUE FOR PROPOSAL

KEY PLAN
NORTH: PLAN TRUE

STATE OF TEXAS
DONALD C. RICHARDS
61525
LICENSED
PROFESSIONAL ENGINEER
June 10, 2025
LEAF ENGINEERS
F-18672

CLIENT	
Galena Park ISD	
DATE	PROJECT NUMBER
June 10, 2025	240539

DRAWING HISTORY

No.	Description	Date

CHECKED BY: Checker
DRAWN BY: REN

1ST FLOOR FIRE ALARM PLAN

TF-101

Plot Stamp:
6/6/2025 10:31:48 AM

2ND FLOOR FIRE ALARM PLAN
TF-102
FOR BLUEBEAM LABELING/OCR:

0"
1"

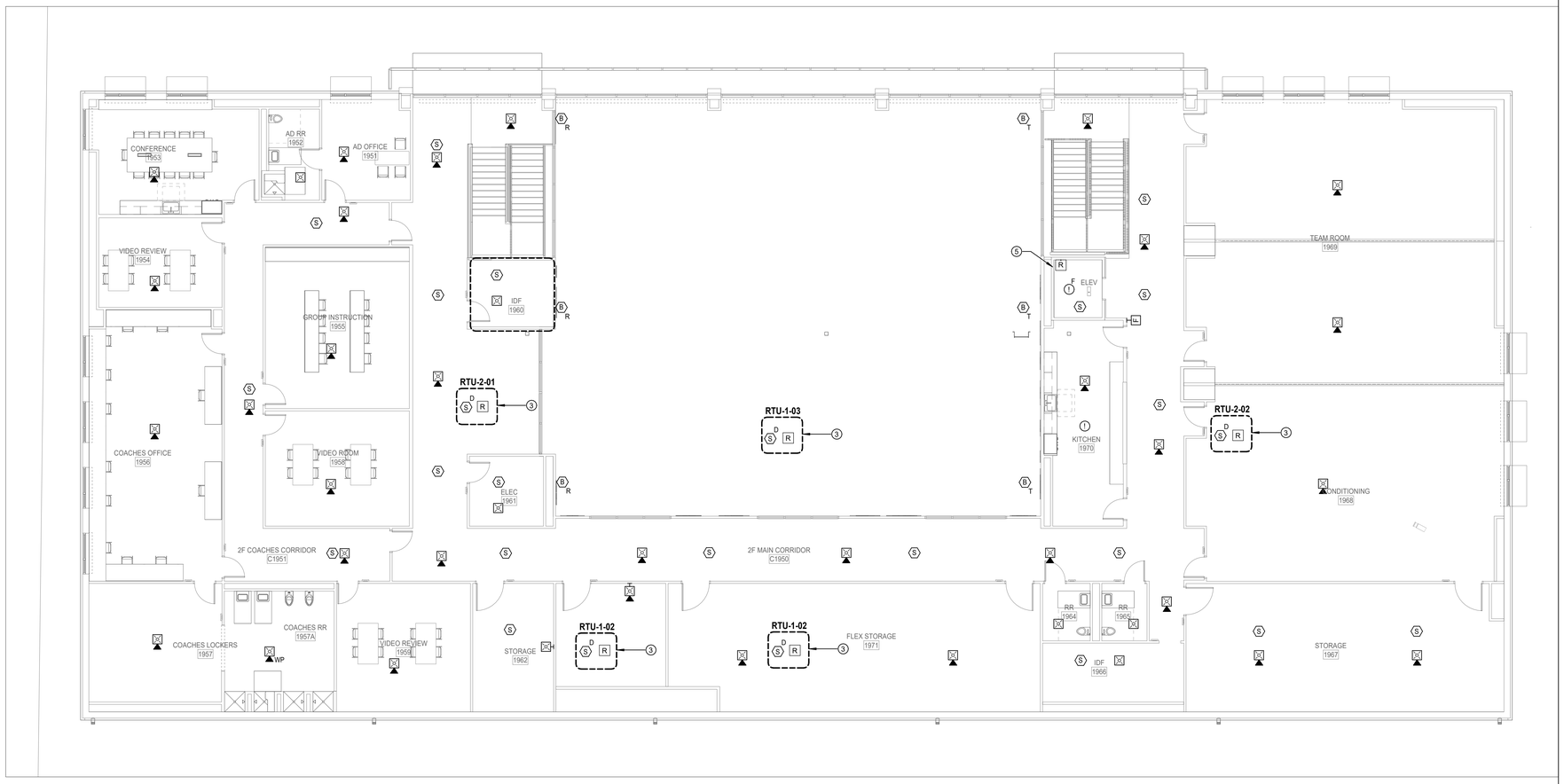

1 **2ND FLOOR FIRE ALARM PLAN**
SCALE: 1/8" = 1'-0"

FIRE ALARM PLAN GENERAL NOTES

A. BASIS OF DESIGN IS REMOTE ANNUNCIATOR PANEL THAT SHALL INTERCONNECT TO HEADEND FACP IN MDF A114 INSIDE OF CTE BUILDING. CONTRACTOR SHALL SUPPLY ALL REQUISITE POWER SUPPLIES TO CREATE CODE-COMPLIANT AND COMPLETELY FUNCTIONAL SYSTEM.

B. REFER TO SPECIFICATIONS FOR MATERIALS AND METHODS

C. DEVICE LOCATIONS AND QUANTITIES SHOWN ON DRAWINGS ARE APPROXIMATE. CONTRACTOR SHALL PROVIDE A COMPLETE AND CODE COMPLIANT FIRE ALARM SYSTEM PER IBC, IFC, NFPA 72 AND AHJ REQUIREMENTS.

D. VERIFY PROPER LOCATION OF DEVICES PRIOR TO INSTALLATION.

E. ELECTRICAL CONTRACTOR SHALL REFERENCE ARCHITECTURAL DRAWINGS FOR ACOUSTIC PANEL LOCATIONS AND ARTISTIC PAINT / MURAL LOCATIONS PRIOR TO ROUGH IN OF BACK BOXES TO ENSURE THERE ARE NO CONFLICTS.

F. PROVIDE WEATHERPROOF DEVICES IN ALL EXTERIOR, HIGH HUMIDITY AND WET AREAS (FREEZER / COOLER, SHOWERS, ETC.).

G. PROVIDE WIREGUARDS OR CLEAR POLYCARBONATE COVERS ON DEVICES INSTALLED IN WEIGHT ROOM 1927.

H. PROVIDE A RELAY AT EVERY LOCAL SOUND RACK IN THE PROJECT TO PROVIDE FOR MUTING OR SHUT DOWN OF LOCAL SOUND SYSTEM IN AN ALARM EVENT. ROUTE FIRE ALARM CABLING INTO THE LOCAL SOUND RACK. COORDINATE WITH LOCAL SOUND CONTRACTOR.

I. REFER TO ARCHITECTURE SHEETS A-101 AND A-102 FOR INDICATION OF LOCATION OF DIRTT MODULAR WALLS.

FIRE ALARM PLAN KEYED NOTES

3. INDICATES DUCT TYPE PHOTOELECTRIC SMOKE DETECTORS AND RELAY TO BE INSTALLED IN LINE WITH THE AIR HANDLER UNITS ON ROOFTOP. REFERENCE MECHANICAL SCHEDULE FOR SIZE OF UNITS.

5. CONTRACTOR SHALL PROVIDE QUANTITY REQUIRED BY CODE.

PBK
www.pbk.com
TX FIRM: BR 1608
HOUSTON, TX
713-965-0608

LEAF ENGINEERS

PKG 3A - GPHS NEW FIELDHOUSE

1000 Keene St,
Galena Park, TX 77547

CLIENT PROJECT NO: 240539

ISSUE FOR PROPOSAL

Galena Park ISD

KEY PLAN
NORTH: PLAN TRUE

STATE OF TEXAS
DONALD C. RICHARDS
61525
PROFESSIONAL ENGINEER

June 10, 2025
LEAF ENGINEERS
F-18672

CLIENT	
Galena Park ISD	
DATE	PROJECT NUMBER
June 10, 2025	240539

DRAWING HISTORY

No.	Description	Date

CHECKED BY: Checker
DRAWN BY: REN

2ND FLOOR FIRE ALARM PLAN

TF-102

Plot Stamp:
6/6/2025 10:31:50 AM

1ST FLOOR TECHNOLOGY PLAN
TN-101
FOR BLUEBEAM LABELING/OCR:

0"
1"

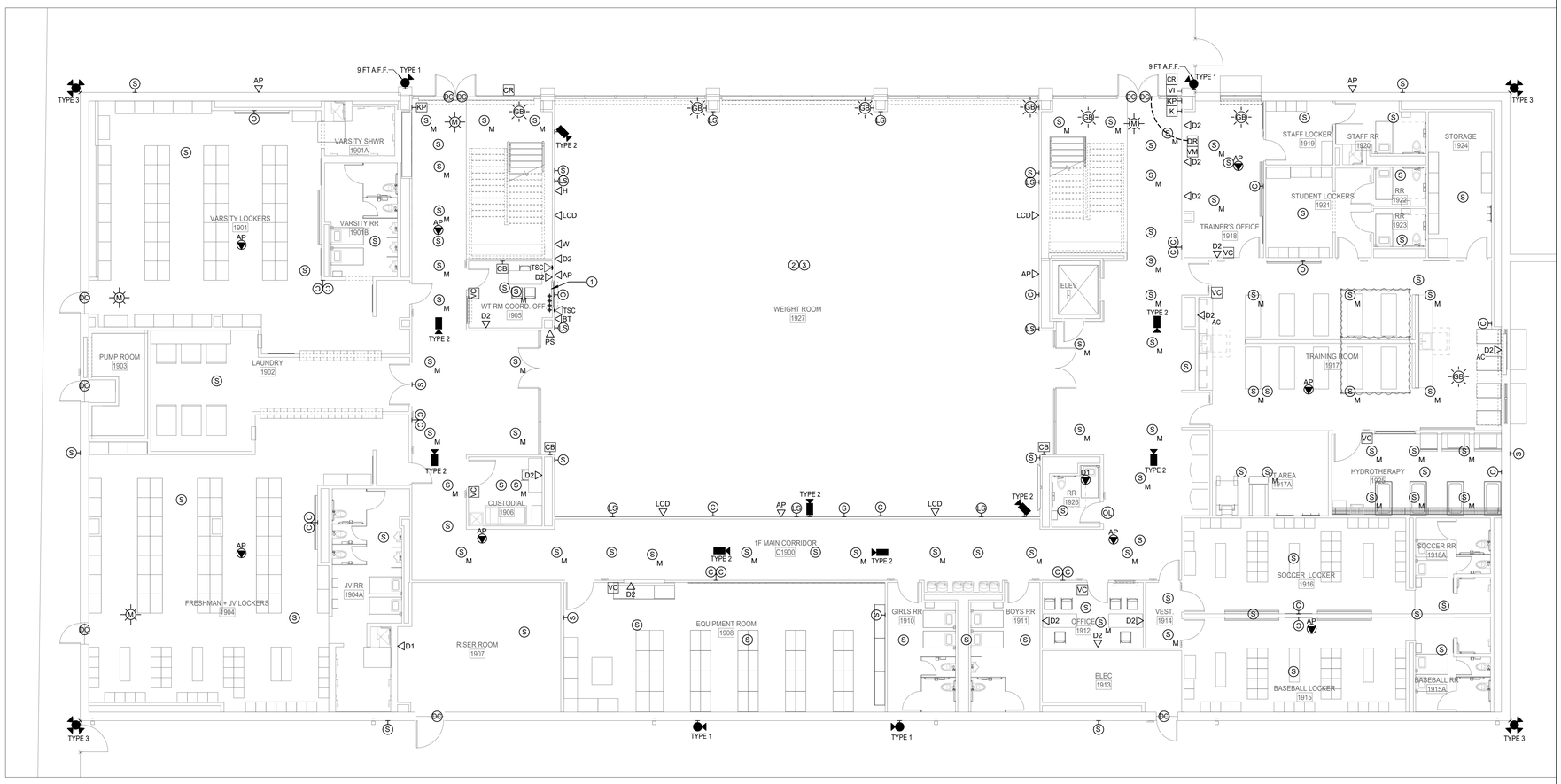

1 **1ST FLOOR TECHNOLOGY PLAN**
SCALE: 1/8" = 1'-0"

TECHNOLOGY PLAN GENERAL NOTES

A. REFER TO SPECIFICATIONS FOR MATERIALS AND METHODS

B. ALL EXTERIOR CAMERAS AND WIRELESS ACCESS POINTS SHALL BE INSTALLED AT 12 FT. A.F.F. UNLESS OTHERWISE NOTED.

C. ALL EXTERIOR CAMERAS AT CANOPY LOCATIONS SHALL BE INSTALLED BELOW THE LOWEST SLOPE OF THE CANOPY. ELECTRICAL CONTRACTOR SHALL VERIFY LOCATIONS PRIOR TO ROUGH-IN OF CONDUIT INFRASTRUCTURE.

D. EXTERIOR PUBLIC ADDRESS SPEAKERS SHALL BE ZONED SEPARATELY FROM INTERIOR PUBLIC ADDRESS SPEAKERS.

E. SECURITY CONTRACTOR SHALL INSTALL ALL POP-ITS IN ACCESSIBLE LOW CEIING SPACE FOR ALL HIGH-VOLUME CEILINGS, CAFETORIUMS, COMMONS AND GYMNASIUMS.

F. ACCESS CONTROL CONTRACTOR SHALL CONNECT DOOR HARDWARE CABLE TO ACCESS CONTROL SYSTEM.

G. PROVIDE DOOR CONTACTS ON ALL ROOF HATCHES. REFERENCE ARCHITECTURAL DRAWINGS FOR LOCATIONS.

H. FOR ALL EXTERIOR MOUNTED IP DEVICES, PROVIDE A BISCUIT TERMINATED ON THE INTERIOR OF THE BUILDING AND A PRETERMINATED CABLE CONNECTED FROM THE BISCUIT TO THE DEVICE.

I. CAMERA ORIENTATION SHOWN DOES NOT INDICATE ACTUAL FIELD OF VIEW. COORDIATE WITH OWNER AND ADJUST CAMERAS FOR PROPER FIELD OF VIEW.

J. PROVIDE WIREGUARDS OR CLEAR POLYCARBONATE COVERS ON DEVICES INSTALLED IN WEIGHT ROOM 1927.

K. EVERY VIDEO DISPLAY (LCD, VIDEO PROJECTOR, ETC.) SHALL RECEIVE 1 QTY. DATA CABLE ROUTED TO NEAREST IDF ALONG WITH ANY OTHER DATA CABLES INDICATED.

L. CONTRACTOR SHALL DOCUMENT THE LOCATION AND ANY ID TAG, MAC ADDRESS, IP ADDRESS OR BAR CODE OF ANY EXISTING DEVICE THAT IS TO BE REMOVED FROM ITS CURRENT LOCATION. DEVICES THAT ARE TO REMAIN SHALL BE REINSTALLED IN THE EXACT LOCATION THAT THEY RESIDE PRIOR TO CONSTRUCTION, UNLESS NOTED OTHERWISE.

M. NOT ALL EXISTING DEVICES ARE SHOWN ON DRAWINGS. DEVICE LOCATIONS ARE APPROXIMATE. CONTRACTOR IS RESPONSIBLE FOR FIELD VERIFICATION.

N. REFER TO ARCHITECTURE SHEETS A-101 AND A-102 FOR INDICATION OF LOCATION OF DIRTT MODULAR WALLS.

TECHNOLOGY PLAN KEYED NOTES

1. INDICATES LOCATION OF (4) 4" CONDUITS ROUTED DOWN THROUGH 2ND FLOOR TO 1ST FLOOR PLENUM FOR CABLING PATHWAYS.

2. ALL TECHNOLOGY SYSTEM DEVICES IN WEIGHT ROOM SPACE EXCLUDING PENDANT SPEAKERS SHALL BE ENCASED IN PROTECTIVE WIREGUARD OR CLEAR POLYCARBONATE COVERS OR CAGES COMPLIANT WITH IP54 STANDARDS TO ENSURE DURABILITY AND SAFETY AGAINST ENVIRONMENTAL HAZARDS AND PHYSICAL IMPACT.

3. ALL TECHNOLOGY DEVICES IN INDICATED SPACE (EXCLUDING PENDANT SPEAKERS AND CEILING-MOUNTED DEVICES) SHALL BE MOUNTED AT 10FT A.F.F. TO ACCOMMODATE FOR HEIGHT OF WEIGHT ROOM EQUIPMENT. DEVICES MOUNTED ABOVE WINDOWS ON PLAN SOUTH WALL OF WEIGHT ROOM SHALL BE MOUNTED 10.5FT A.F.F. FOR CLEARANCE ABOVE WINDOWS.

PBK
www.pbk.com
TX FIRM: BR 1608
HOUSTON, TX
713-965-0608

LEAF ENGINEERS

PKG 3A - GPHS NEW FIELDHOUSE

1000 Keene St,
Galena Park, TX 77547

CLIENT PROJECT NO: 240539

ISSUE FOR PROPOSAL

Galena Park ISD
GP
EXCELLENCE IN ALL FOR ALL WE DO

KEY PLAN
NORTH: PLAN TRUE

STATE OF TEXAS
DONALD C. RICHARDS
61525
LICENSED
PROFESSIONAL ENGINEER
June 10, 2025
LEAF ENGINEERS
F-18672

CLIENT	
Galena Park ISD	
DATE: June 10, 2025	PROJECT NUMBER: 240539

DRAWING HISTORY

No.	Description	Date

CHECKED BY: Checker
DRAWN BY: REN

1ST FLOOR TECHNOLOGY PLAN

TN-101

Plot Stamp:
6/6/2025 10:31:55 AM

2ND FLOOR TECHNOLOGY PLAN
TN-102
FOR BLUEBEAM LABELING/OCR:

0"
1"

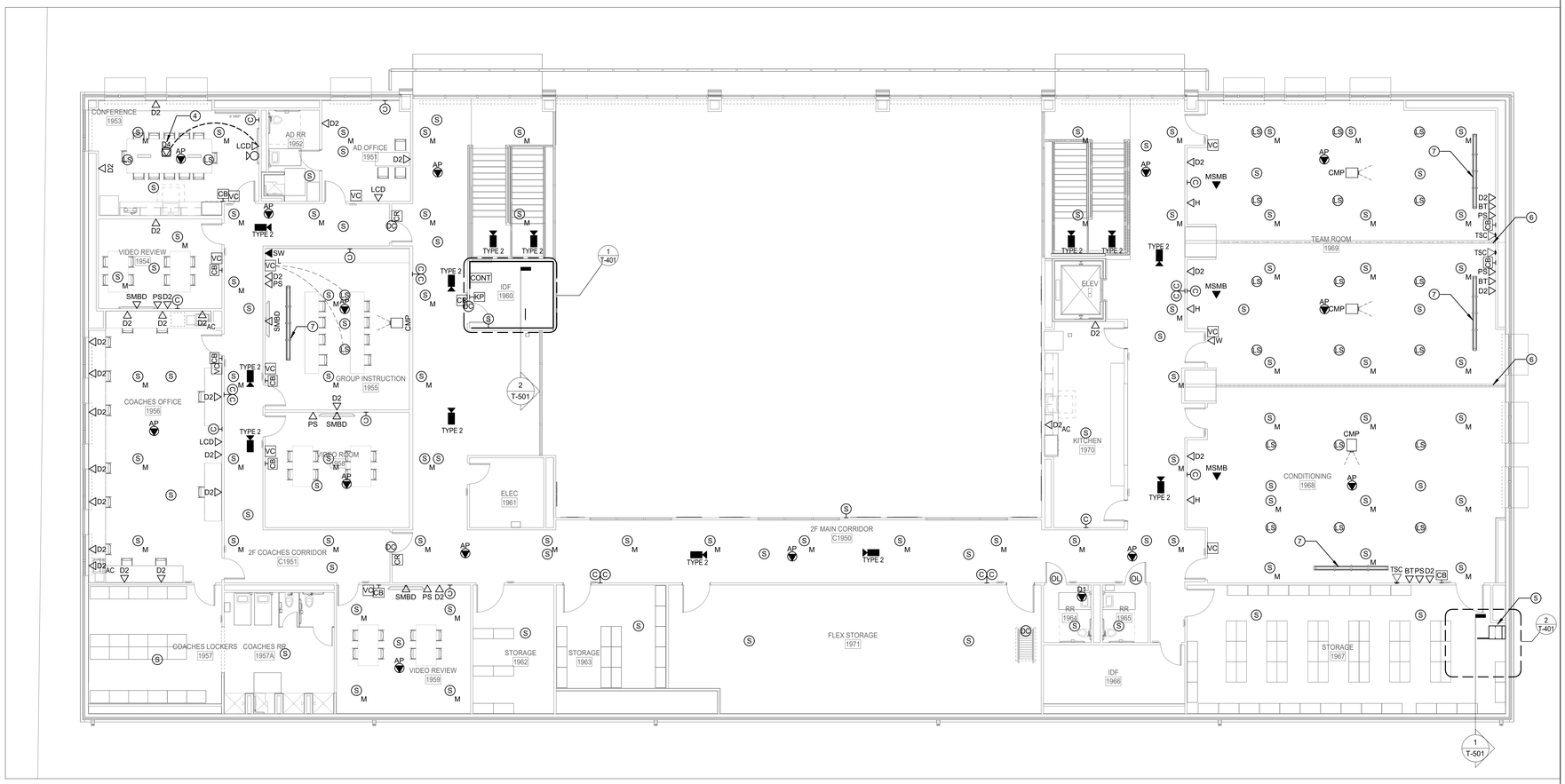

1 **2ND FLOOR TECHNOLOGY PLAN**
SCALE: 1/8" = 1'-0"

TECHNOLOGY PLAN GENERAL NOTES

A. REFER TO SPECIFICATIONS FOR MATERIALS AND METHODS

B. ALL EXTERIOR CAMERAS AND WIRELESS ACCESS POINTS SHALL BE INSTALLED AT 12 FT. A.F.F. UNLESS OTHERWISE NOTED.

C. ALL EXTERIOR CAMERAS AT CANOPY LOCATIONS SHALL BE INSTALLED BELOW THE LOWEST SLOPE OF THE CANOPY. ELECTRICAL CONTRACTOR SHALL VERIFY LOCATIONS PRIOR TO ROUGH-IN OF CONDUIT INFRASTRUCTURE.

D. EXTERIOR PUBLIC ADDRESS SPEAKERS SHALL BE ZONED SEPARATELY FROM INTERIOR PUBLIC ADDRESS SPEAKERS.

E. SECURITY CONTRACTOR SHALL INSTALL ALL POP-ITS IN ACCESSIBLE LOW CEIING SPACE FOR ALL HIGH-VOLUME CEILINGS, CAFETORIUMS, COMMONS AND GYMNASIUMS.

F. ACCESS CONTROL CONTRACTOR SHALL CONNECT DOOR HARDWARE CABLE TO ACCESS CONTROL SYSTEM.

G. PROVIDE DOOR CONTACTS ON ALL ROOF HATCHES. REFERENCE ARCHITECTURAL DRAWINGS FOR LOCATIONS.

H. FOR ALL EXTERIOR MOUNTED IP DEVICES, PROVIDE A BISCUIT TERMINATED ON THE INTERIOR OF THE BUILDING AND A PRETERMINATED CABLE CONNECTED FROM THE BISCUIT TO THE DEVICE.

I. CAMERA ORIENTATION SHOWN DOES NOT INDICATE ACTUAL FIELD OF VIEW. COORDIATE WITH OWNER AND ADJUST CAMERAS FOR PROPER FIELD OF VIEW.

J. PROVIDE WIREGUARDS OR CLEAR POLYCARBONATE COVERS ON DEVICES INSTALLED IN WEIGHT ROOM 1927.

K. EVERY VIDEO DISPLAY (LCD, VIDEO PROJECTOR, ETC.) SHALL RECEIVE 1 QTY. DATA CABLE ROUTED TO NEAREST IDF ALONG WITH ANY OTHER DATA CABLES INDICATED.

L. CONTRACTOR SHALL DOCUMENT THE LOCATION AND ANY ID TAG, MAC ADDRESS, IP ADDRESS OR BAR CODE OF ANY EXISTING DEVICE THAT IS TO BE REMOVED FROM ITS CURRENT LOCATION. DEVICES THAT ARE TO REMAIN SHALL BE REINSTALLED IN THE EXACT LOCATION THAT THEY RESIDE PRIOR TO CONSTRUCTION, UNLESS NOTED OTHERWISE.

M. NOT ALL EXISTING DEVICES ARE SHOWN ON DRAWINGS. DEVICE LOCATIONS ARE APPROXIMATE. CONTRACTOR IS RESPONSIBLE FOR FIELD VERIFICATION.

N. REFER TO ARCHITECTURE SHEETS A-101 AND A-102 FOR INDICATION OF LOCATION OF DIRTT MODULAR WALLS.

TECHNOLOGY PLAN KEYED NOTES

4. INDICATED 'D4' FLOOR POCKET SHALL BE ROUTED THROUGH FLOOR TO REAR SIDE OF ASSOCIATED 'LCD' PANEL. (2) DATA CABLES SHALL LAND IN THE IDF ROOM, AND (2) SHALL ACT AS INTERCONNECTION BETWEEN LCD AND FLOOR POCKET FOR HDMI OVER IP SOLUTIONS IN CONFERENCE ROOM.

5. INDICATES LOCATION OF AV EQUIPMENT RACK. PROVIDE 2 QTY. DATA CABLES ROUTED TO NEAREST IDF. PROVIDE 2 QTY. DATA CABLES ROUTED TO NEAREST IDF. PROVIDE 2 QTY. 20A 120V DEDICATED CIRCUITS INSIDE RACK BACK PAN. PROVIDE A NEMA1 FLUSH MOUNT BOX INSIDE RACK BACK PAN WITH (2) 2" CONDUITS STUBBED OUT ABOVE ACCESSIBLE CEILING IN CEILING OF ADJACENT ROOM (CONDITIONING 1968) FOR ROUTING TO END DEVICES. COORDINATE WITH DEVICE MOUNTING ELEVATION WITH LOCAL SOUND CONTRACTOR PRIOR TO ROUGH-IN.

6. INDICATES APPROXIMATE LOCATION OF LEGRAND PARTITION SENSOR MOUNTED IN LINE WITH TRACK TO ACTIVATE DIVIDE/COMBINE OF EACH ROOM.

7. INDICATES DALITE TENSIONED ADVANTAGE SERIES 184" SCREEN THAT SHALL BE FLUSH-MOUNTED IN CEILING. COORDINATE WITH ELECTRICAL CONTRACTOR FOR 120V PIGTAIL HOOKUP AT EACH SCREEN. IN GROUP INSTRUCTION 1965, PROVIDE A MANUAL UP/DOWN SWITCH ON WALL NEAREST THE 'PS' INPUT PLATE AT PROJECT SWITCH HEIGHT.

PBK
www.pbk.com
TX FIRM: BR 1608
HOUSTON, TX
713-965-0608

LEAF ENGINEERS

PKG 3A - GPHS NEW FIELDHOUSE

1000 Keene St.
Galena Park, TX 77547

CLIENT PROJECT NO: 240539

ISSUE FOR PROPOSAL

Galena Park ISD
EXCELLENCE IN ALL FOUNDATIONS

KEY PLAN
NORTH: PLAN TRUE

STATE OF TEXAS
DONALD C. RICHARDS
61525
LICENSED
PROFESSIONAL ENGINEER
June 10, 2025
LEAF ENGINEERS
F-16672

CLIENT	
Galena Park ISD	
DATE	PROJECT NUMBER
June 10, 2025	240539

DRAWING HISTORY

No.	Description	Date

CHECKED BY: Checker
DRAWN BY: REN

2ND FLOOR TECHNOLOGY PLAN

TN-102

Plot Stamp:
6/6/2025 10:31:57 AM

TECHNOLOGY ENLARGED
T-401
FOR BLUEBEAM LABELING/OCR:

0"
1"

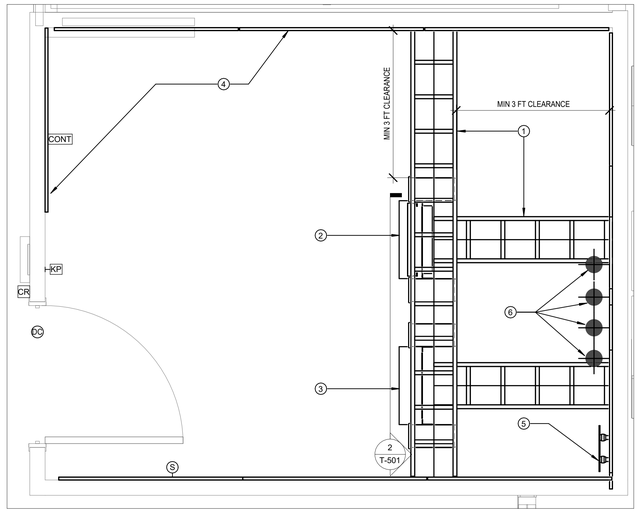

1 **2ND FLOOR TECHNOLOGY PLAN - IDF 1929**
SCALE: 3/4" = 1'-0"

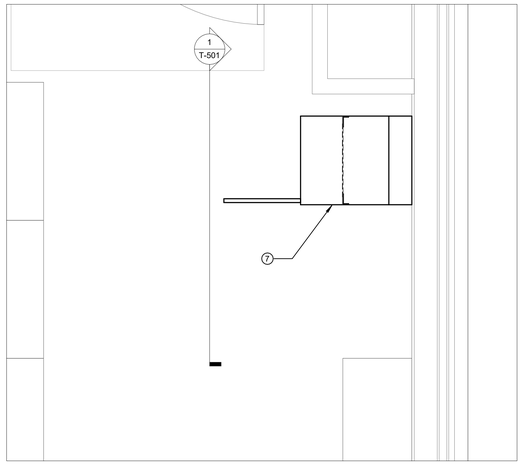

2 **2ND FLOOR TECHNOLOGY PLAN - LOCAL SOUND RACK**
SCALE: 3/4" = 1'-0"

TECHNOLOGY ENLARGED PLANS KEYED NOTES:

1. INDICATES LADDER RACKS INSTALLED TO WALLS. PROVIDE VERTICAL PATH FOR CABLES RUNNING BETWEEN 2ND FLOOR PLENUM AND FIRST FLOOR PLENUM FROM IDF RACKS THROUGH 4" CONDUITS AND UP WALL CHASE.
2. INDICATES 2-POST IDF RACK 1
3. INDICATES 2-POST IDF RACK 2 (AV)
4. INDICATES FIRE-RATED PLYWOOD BACKBOARD ON ALL WALLS MOUNTED WITH BOTTOM AT +20" AFF.
5. INDICATES GROUNDING BUS BAR
6. INDICATES (4) 4" CONDUITS ROUTED THROUGH FLOOR TO FIRST FLOOR PLENUM SPACE
7. INDICATES LOCAL SOUND RACK FOR DIVIDE/COMBINE ROOMS.

PBK
www.pbk.com
TX FIRM: BR 1608
HOUSTON, TX
713-965-0608

LEAF ENGINEERS

PKG 3A - GPHS NEW FIELDHOUSE

1000 Keene St.
Galena Park, TX 77547

CLIENT PROJECT NO: 240539

ISSUE FOR PROPOSAL

Galena Park ISD
EXCELLENCE IN ALL FORMS OF LEARNING

KEY PLAN
NORTH: PLAN TRUE

STATE OF TEXAS
DONALD C. RICHARDS
61525
LICENSED
PROFESSIONAL ENGINEER
June 10, 2025
LEAF ENGINEERS
F-16672

CLIENT	
Galena Park ISD	
DATE: June 10, 2025	PROJECT NUMBER: 240539

DRAWING HISTORY

No.	Description	Date

CHECKED BY: Checker
DRAWN BY: REN

TECHNOLOGY ENLARGED

T-401

Plot Stamp:
6/6/2025 10:31:58 AM

TECHNOLOGY RISER DIAGRAMS
T-501
FOR BLUEBEAM LABELING/OCR:

0"
1"

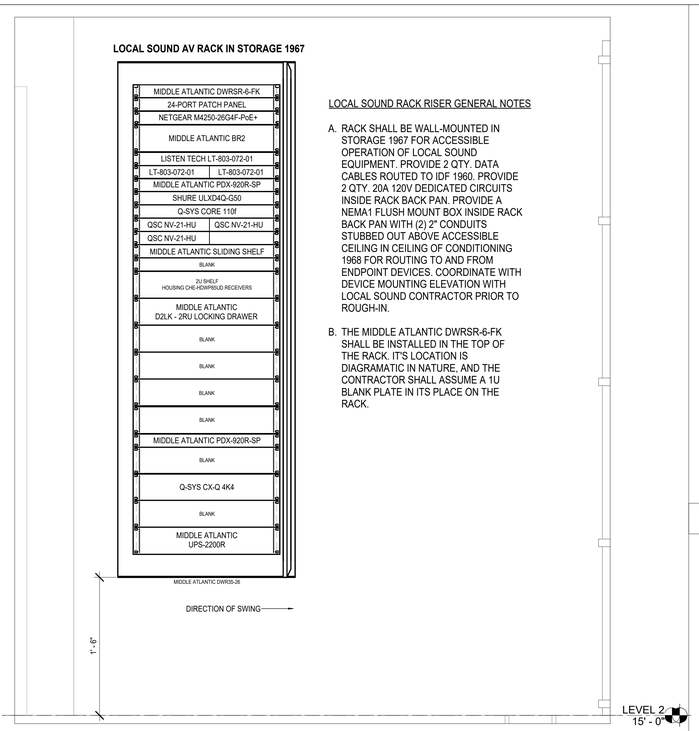

LOCAL SOUND RACK RISER GENERAL NOTES

A. RACK SHALL BE WALL-MOUNTED IN STORAGE 1967 FOR ACCESSIBLE OPERATION OF LOCAL SOUND EQUIPMENT. PROVIDE 2 QTY. DATA CABLES ROUTED TO IDF 1960. PROVIDE 2 QTY. 20A 120V DEDICATED CIRCUITS INSIDE RACK BACK PAN. PROVIDE A NEMA1 FLUSH MOUNT BOX INSIDE RACK BACK PAN WITH (2) 2" CONDUITS STUBBED OUT ABOVE ACCESSIBLE CEILING IN CEILING OF CONDITIONING 1968 FOR ROUTING TO AND FROM ENDPOINT DEVICES. COORDINATE WITH DEVICE MOUNTING ELEVATION WITH LOCAL SOUND CONTRACTOR PRIOR TO ROUGH-IN.

B. THE MIDDLE ATLANTIC DWRSR-6-FK SHALL BE INSTALLED IN THE TOP OF THE RACK. IT'S LOCATION IS DIAGRAMATIC IN NATURE, AND THE CONTRACTOR SHALL ASSUME A 1U BLANK PLATE IN ITS PLACE ON THE RACK.

1 **LOCAL SOUND RACK ELEVATION - STORAGE 1967**
SCALE: 1 1/2" = 1'-0"

IDF RACK RISER GENERAL NOTES

A. RACKS SHALL BE 45U 2-POST RACK

B. DRAWING SHOWS TYPICAL DISTRICT RACK LAYOUT FOR IDF RACK 1. IN THIS TYPICAL DESIGN, ASSUME 13U OF SPACE BETWEEN BOTTOM-MOST BLANK PLATE AND TOP-MOST UPS.

C. IDF RACK 2 SHALL BE PROVISIONED WITH AUDIO/VISUAL EQUIPMENT AS REQUIRED FOR WEIGHT ROOM 1927

(#) IDF RACK RISER KEYED NOTES

1. 24-PORT MODULAR PATCH PANEL
2. (2) 24-PORT OR (1) 2U 48-PORT MODULAR PATCH PANEL(S)
3. OFCI 48-PORT NETWORK SWITCH
4. SIDE-MOUNTED VERTICAL CABLE MANAGEMENT FOR 2-POST RACK
5. INDICATES (4) 4" CONDUITS ROUTED THROUGH FLOOR TO FIRST FLOOR PLENUM BY ELECTRICAL CONTRACTOR, AND EQUIPPED WITH NYLON BUSHINGS ON BOTH ENDS.
6. INDICATES GROUNDING BUS BAR.
7. INDICATES TYPICAL FIRE-RATED PLYWOOD BACKBOARD MOUNTED LAGGED INTO METAL STUD BACKER.

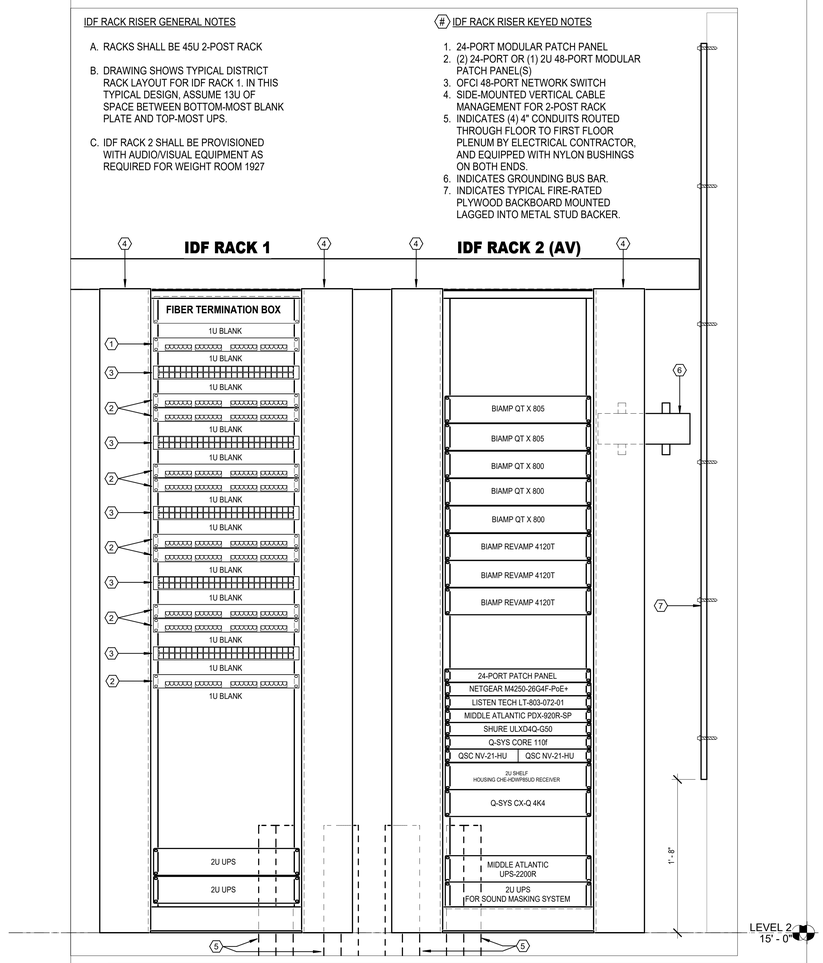

2 **MDF RACK ELEVATION - IDF 1960**
SCALE: 1 1/2" = 1'-0"

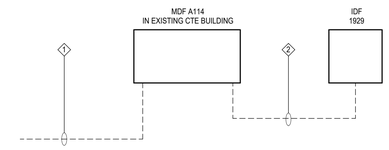

TECHNOLOGY GENERAL NOTES:

A. REFER TO SPECIFICATIONS FOR MATERIALS AND METHODS.

TECHNOLOGY KEYED NOTES:

1. INDICATES INCOMING COMMUNICATIONS CABLING PROVIDED BY OWNER'S SERVICE PROVIDER.
2. INDICATES (1) 24 STRAND, SINGLE-MODE FIBER CABLE

3 **MDF-IDF CABLING INTERCONNECTIONS**
SCALE: NOT TO SCALE

PBK
www.pbk.com
TX FIRM: BR 1608
HOUSTON, TX
713-965-0608

LEAF ENGINEERS

PKG 3A - GPHS NEW FIELDHOUSE
1000 Keene St.
Galena Park, TX 77547

CLIENT PROJECT NO: 240539
ISSUE FOR PROPOSAL

Galena Park ISD
GP
EXCELLENCE IN ALL FOUNDATIONS

KEY PLAN
NORTH: PLAN TRUE

STATE OF TEXAS
DONALD C. RICHARDS
61525
LICENSED
PROFESSIONAL ENGINEER
June 10, 2025
LEAF ENGINEERS
F-16672

CLIENT	
Galena Park ISD	
DATE: June 10, 2025	PROJECT NUMBER: 240539

DRAWING HISTORY

No.	Description	Date

CHECKED BY: Checker
DRAWN BY: REN

TECHNOLOGY RISER DIAGRAMS

T-501

Plot Stamp:
6/6/2025 10:31:59 AM

TECHNOLOGY DETAILS
T-701
FOR BLUEBEAM LABELINGDOCR:

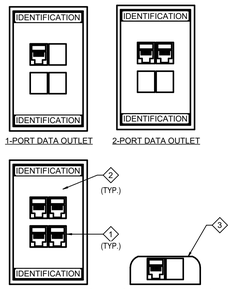

1-PORT DATA OUTLET 2-PORT DATA OUTLET

4-PORT DATA OUTLET SURFACE MOUNT BOX 2-PORT

NOTES:

A. REFER TO SPECIFICATION - HORIZONTAL CABLING REQUIREMENTS FOR CATEGORY CABLE PERFORMANCE REQUIREMENTS.
B. ALL FACEPLATES SHALL BE A 4-PORT, FLUSH-MOUNTED, 110 STYLE, STAINLESS STEEL IN COLOR FOR ALL DATA OUTLETS.
C. REFER TO SPECIFICATION - IDENTIFICATION FOR DATA OUTLET PORT IDENTIFICATION.
D. DATA OUTLET SHALL BE INSTALL IN A 4" SQUARE BACKBOX WITH A SINGLE GANG PLASTER RING. REFER TO DETAIL 2/T-701 TECHNOLOGY ROUGH-IN MOUNTING DETAILS FOR CONDUIT SIZE.
E. PROVIDE REMOVABLE BLANK INSERTS FOR UNUSED PORTS.
F. USE T568B WIRING SCHEME TO TERMINATE THE TWISTED-PAIR CABLE ONTO THE CONNECTOR INTERFACE.
G. WHERE APPLIES PER PLANS, PROVIDE AV OUTLET WITH HDMI CONNECTION PER BELOW.
- PANDUIT COVER PLATE: CBEIWY OR APPROVED EQUAL
- PANDUIT JACK (HDMI 2.0) CMHDMIW OR APPROVED EQUAL
- PANDUIT MODULAR INSERT: CHF2IW-X OR APPROVED EQUAL

KEYNOTE NOTES:

1. PROVIDE CAT6 RJ-45 JACKS, 8-POSITION, 8-CONTACT (8P8C), COLOR BLUE FOR DATA, WHITE FOR VOICE.
   - PANDUIT PRODUCTS "CJ688TGxx", OR APPROVED EQUAL.
2. PROVIDE 1,2,4,6-PORT FACEPLATE AS INDICATED ON DRAWINGS.
   - 2-PORT: 42080-2WP.
   - 4-PORT: 42080-4WS.
   - 6-PORT: 42080-6WP.
3. PROVIDE SURFACE MOUNT BOX, PLENUM RATED, MOUNTED ABOVE CEILING FOR CONNECTIONS TO WIRELESS ACCESS POINTS.
   - Panduit #CBX2WH-AY.
4. PROVIDE 1' patch cords for each CAT6. Leviton P/N: 6D460-01L.
5. PROVIDE 1' patch cords for each CAT6A. Leviton P/N: H6A10-1Y.
6. PROVIDE 15' station cords for each CAT6. Leviton P/N: 6D460-15L.
7. PROVIDE 10' station cords for each CAT6. Leviton P/N: H6A10-10Y

1 DATA OUTLET DETAILS
SCALE: NOT TO SCALE

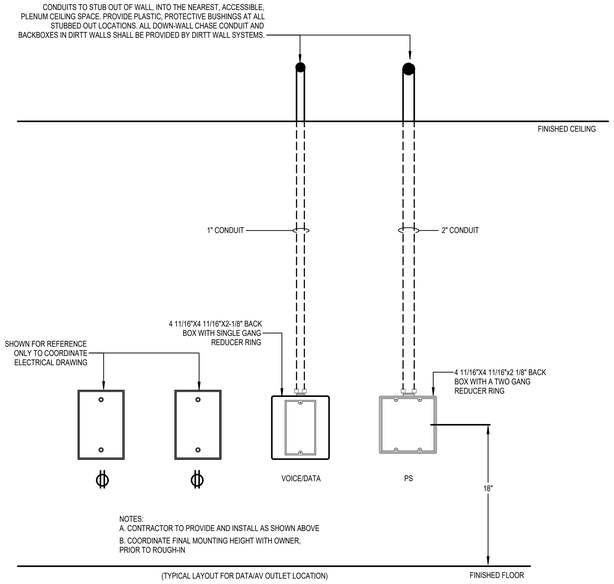

4 TYPICAL INSTRUCTORS 'PS' OUTLET
SCALE: NOT TO SCALE

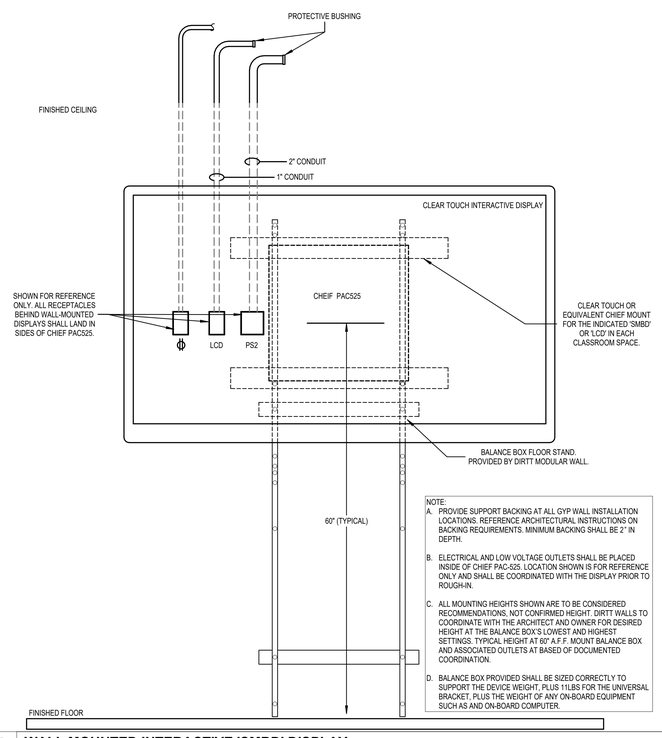

NOTE:
A. PROVIDE SUPPORT BACKING AT ALL GYP WALL INSTALLATION LOCATIONS. REFERENCE ARCHITECTURAL INSTRUCTIONS ON BACKING REQUIREMENTS. MINIMUM BACKING SHALL BE 2" IN DEPTH.
B. ELECTRICAL AND LOW VOLTAGE OUTLETS SHALL BE PLACED INSIDE OF CHIEF PAC-525. LOCATION SHOWN IS FOR REFERENCE ONLY AND SHALL BE COORDINATED WITH THE DISPLAY PRIOR TO ROUGH-IN.
C. ALL MOUNTING HEIGHTS SHOWN ARE TO BE CONSIDERED RECOMMENDATIONS, NOT CONFIRMED HEIGHT. DIRTT WALLS TO COORDINATE WITH THE ARCHITECT AND OWNER FOR DESIRED HEIGHT AT THE BALANCE BOX'S LOWEST AND HIGHEST SETTINGS. TYPICAL HEIGHT AT 60" A.F.F. MOUNT BALANCE BOX AND ASSOCIATED OUTLETS AT BASED OF DOCUMENTED COORDINATION.
D. BALANCE BOX PROVIDED SHALL BE SIZED CORRECTLY TO SUPPORT THE DEVICE WEIGHT, PLUS 11LBS FOR THE UNIVERSAL BRACKET, PLUS THE WEIGHT OF ANY ON-BOARD EQUIPMENT SUCH AS AND ON-BOARD COMPUTER.

7 WALL MOUNTED INTERACTIVE 'SMBD' DISPLAY
SCALE: NOT TO SCALE

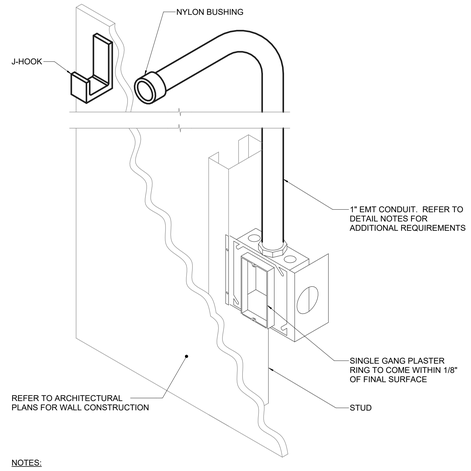

NOTES:

1. 1" EMT CONDUIT SHALL STUB UP TO NEAREST ACCESSIBLE CEILING AND TERMINATE ORIENTED HORIZONTALLY AT THE HEIGHT OF THE ASSOCIATED J-HOOK ROUTE. CONDUIT RUN SHALL NOT CONTAIN MORE THAN 180 DEGREES OF BEND BETWEEN ACCESSIBLE JUNCTION BOXES OR BETWEEN JUNCTION BOX AND END OF CONDUIT.
2. WHERE CONDUIT STUB IS LOCATED IN A ROOM WITH AN ACCESSIBLE CEILING AND IS NOT REQUIRED TO RUN TO CABLE ROUTE LOCATED OUTSIDE THE ROOM, STUB MUST TERMINATE ABOVE THE ACCESSIBLE CEILING WITH A 90-DEGREE BEND AT THE TOP ORIENTED IN TO THE ROOM AT THE HEIGHT OF THE ASSOCIATED J-HOOK ROUTE IN THE ROOM.
3. ALL STUBS MUST BE FITTED WITH A NYLON BUSHING ON EACH END OF THE CONDUIT.
4. INSTALLING CONTRACTOR SHALL FURNISH AND INSTALL FIRESTOP MATERIALS FOR TECHNOLOGY ROUGH-INS PER PROJECT REQUIREMENTS. REFER TO SPECIFICATIONS FOR FIRESTOP REQUIREMENTS.

2 TECHNOLOGY ROUGH-IN DETAILS
SCALE: NOT TO SCALE

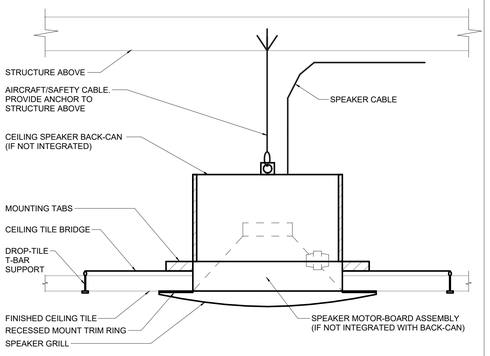

NOTES:

1. WHERE SUPPORTS ATTACH TO METAL ROOF DECKING, EXCLUDING CONCRETE ON METAL DECKING, DO NOT EXCEED 25 LBS. PER HANGAR AND A MINIMUM SPACING OF 2'-0" ON CENTER. THIS 25 LB. LOAD AND 2'-0" SPACING INCLUDE ELECTRICAL AND MECHANICAL ITEMS HANGING FROM DECK. IF THE HANGER RESTRICTIONS CANNOT BE ACHIEVED, THE ADDITION OF SUPPLEMENTAL FRAMING OFF STEEL FRAMING WILL BE REQUIRED.

5 CEILING SPEAKER MOUNTING
SCALE: NOT TO SCALE

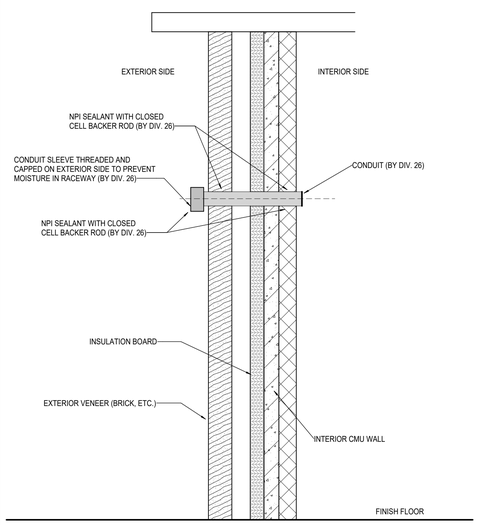

8 WALL PENETRATION DETAIL
SCALE: NOT TO SCALE

LABELING AND PATCHING GENERAL NOTES:

1. LABELS SHALL BE GENERATED IN THE FOLLOWING PATTERN ON THE PATCH PANELS:
   - XY ##
     a. X IS CLOSET DESIGNATION, MDF = A, IDF1 = B, IDF@ = C
     b. Y IS PATCH PANEL DESIGNATION, A = 1, B = 2, C = 3
     c. ## IS PATCH PANEL PORT NUMBER
     d. EXAMPLE AA01 DESIGNATES MDF, PATCH PANEL A, PORT 1.
2. WAP ON RACK SHOULD BE LABELED WAP XY##
3. SECURITY CAMERA RUNS (GREEN KEYSTONES) SHOULD OCCUPY THE RIGHT-MOST 6 - 12 PORTS ON EACH PATCH PANEL.
4. PATCH PANEL PORT LABELING SHALL BE MACHINE GENERATED AND SHALL NOT BE LESS THAN 1/4" IN HEIGHT.
5. PATCH PANEL AND CLOSET IDENTIFICATION LABEL SHALL BE MACHINE GENERATED AND SHALL NOT BE LESS THAN 1/8" HEIGHT.
6. COORDINATE EXACT LABELING SCHEME WITH OWNER AND ENGINEER.

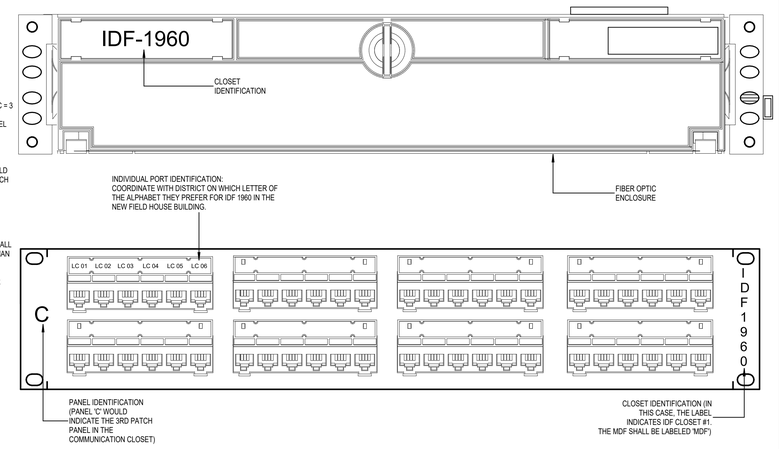

6 FIBER ENCLOSURE/ COPPER PATCH PANEL LABELING DETAIL
SCALE: NOT TO SCALE

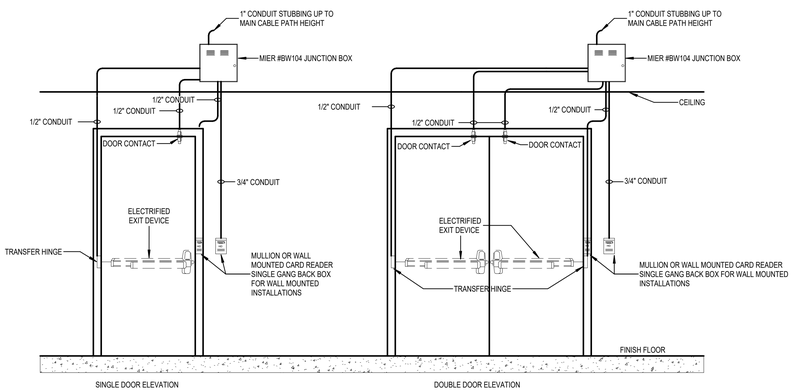

3 LVACS-03 - ACCESS CONTROL - EXIT DEVICE DOOR ELEVATION
SCALE: NOT TO SCALE

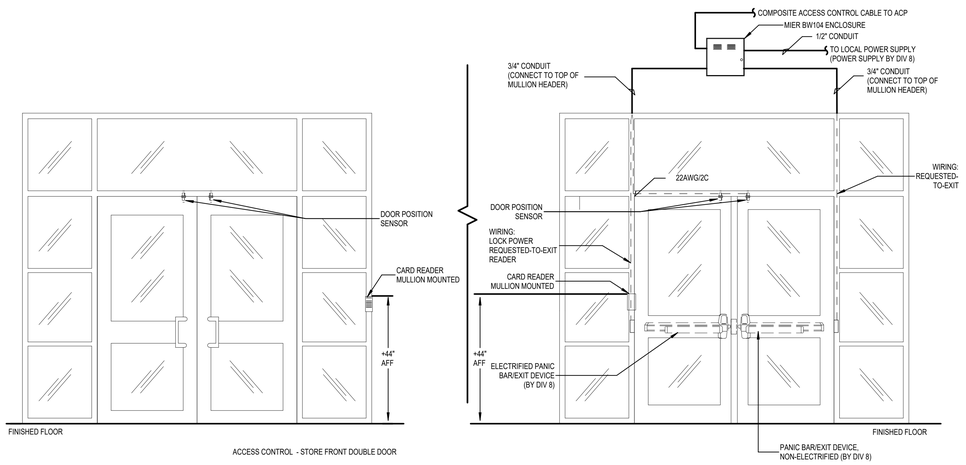

9 STOREFRONT ACCESS CONTROL - TYPICAL
SCALE: NOT TO SCALE

PBK
www.pbk.com
TX FIRM: BR 1608
HOUSTON, TX
713-965-0608

LEAF ENGINEERS

PKG 3A - GPHS NEW FIELDHOUSE
1000 Keene St.
Galena Park, TX 77547

CLIENT PROJECT NO: 240539
ISSUE FOR PROPOSAL

Galena Park ISD

KEY PLAN
NORTH: PLAN TRUE

STATE OF TEXAS
DONALD C. RICHARDS
61525
LICENSED
PROFESSIONAL ENGINEER
June 10, 2025
LEAF ENGINEERS
F-16672

CLIENT	
Galena Park ISD	
DATE June 10, 2025	PROJECT NUMBER 240539

DRAWING HISTORY

No.	Description	Date

CHECKED BY: Checker
DRAWN BY: REN

TECHNOLOGY DETAILS

T-701

Plot Stamp:
6/6/2025 10:31:59 AM

TECHNOLOGY DETAILS
T-702
FOR BLUEBEAM LABELING/OCR:

0"
1"

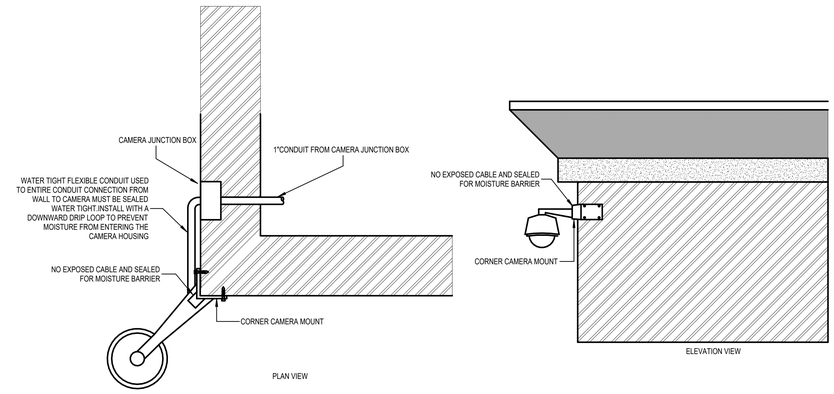

NOTE:
ELECTRICAL CONTRACTOR SHALL PROVIDE 1" CONDUIT WITH PULL STRING TO NEAREST AVAILABLE PLENUM SPACE. SECURITY CONTRACTORS SHALL PROVIDE CABLE FEED-THROUGH MOUNT FOR CAMERA. NO EXPOSED CABLE WILL BE ALLOWED. SECURITY CONTRACTOR TO COORDINATE MOUNTING HEIGHT WITH ELECTRICAL CONTRACTOR PRIOR TO ROUGH-IN.

1 CORNER MOUNTING DETAIL
SCALE: NOT TO SCALE

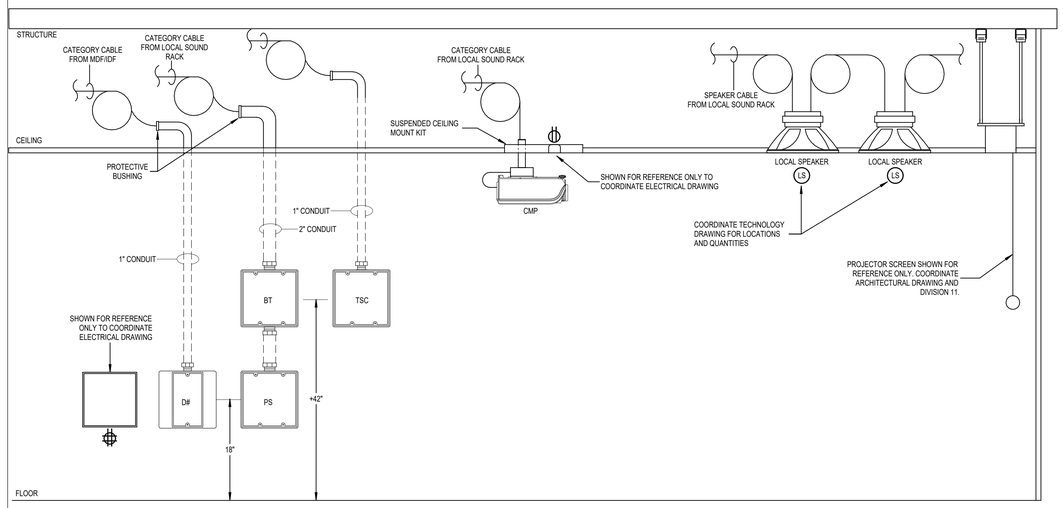

5 DIVIDE/COMBINE ROOM - TYPICAL
SCALE: NOT TO SCALE

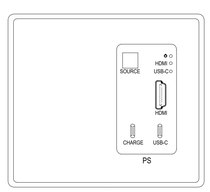

PS
2-GANG DECORA STYLE WALLPLATE. LEVITON PRODUCT NO. 80608-* COMPREHENSIVE PRODUCT # CHE-HDWP8SUD TRANSMITTER

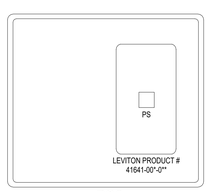

PS2
2-GANG DECORA STYLE WALLPLATE. LEVITON PRODUCT NO. 80608-* WITH BLUE KEYSTONE FOR DATA PORT. PROVIDE 3FT CAT6 CABLE TO PATCH TO RECEIVER

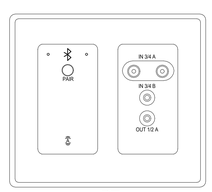

BT
2-GANG ATTERO TECH PRODUCT # unD6I0-BT

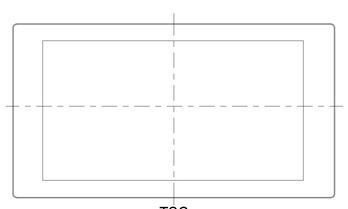

TSC
Q-SYS TSC-70-G3 WITH MOUNTING BRACKET

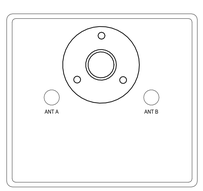

W
DOUBLE GANG ANODIZED PLATE, BLACK WITH 2 QTY 50 OHM BNC CONNECTORS AND 1 QTY ATLAS SOUND AD-12BE

H
LEVITON PRODUCT # 84013-40

6 OTHER PLATE DETAILS
SCALE: 6" = 1'-0"

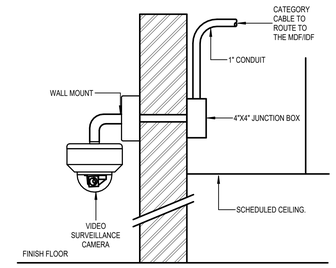

2 EXTERIOR WALL MOUNTED DOME CAMERA
SCALE: NOT TO SCALE

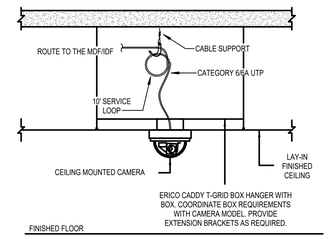

3 INTERIOR LAY-IN CEILING MOUNTED CAMERA
SCALE: NOT TO SCALE

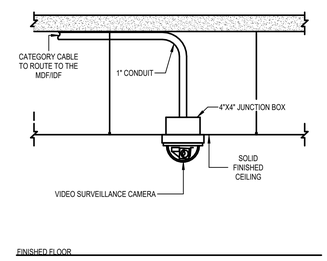

4 SOLID CEILING MOUNT CAMERA
SCALE: NOT TO SCALE

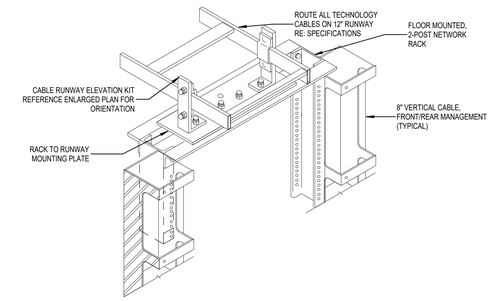

7 RACK TO RUNWAY DETAIL
SCALE: NOT TO SCALE

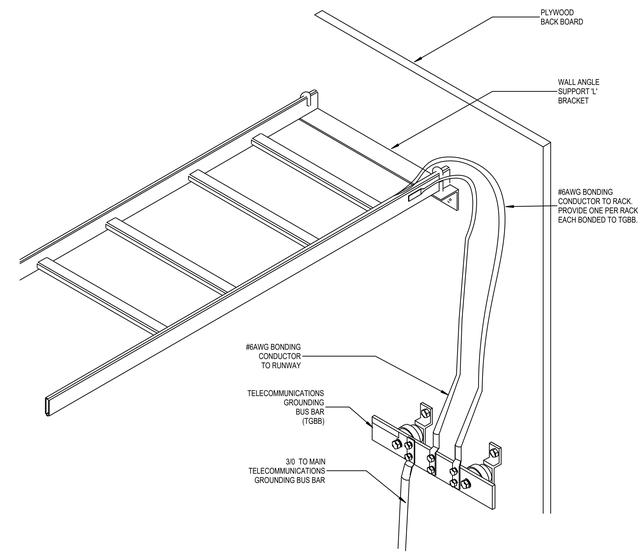

8 CABLE RUNWAY - GROUNDING AND BONDING
SCALE: NOT TO SCALE

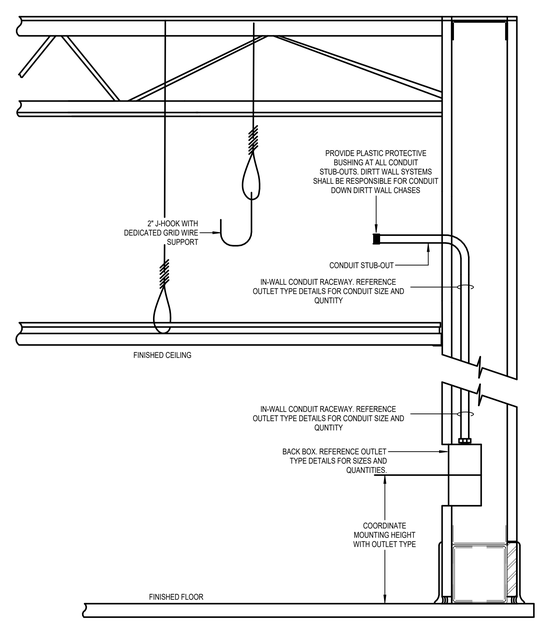

9 LOW VOLTAGE ELEVATION - IN-WALL RACEWAY
SCALE: NOT TO SCALE

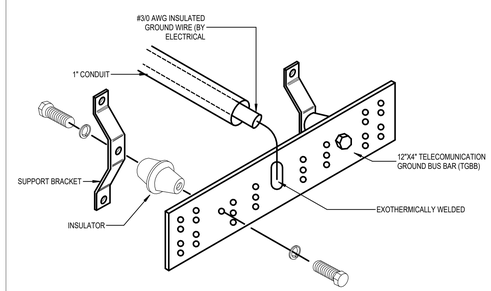

10 TELECOMMUNICATION GROUNDING BUS DETAIL
SCALE: NOT TO SCALE

PBK
www.pbk.com
TX FIRM: BR 1608
HOUSTON, TX
713-965-0608

LEAF ENGINEERS

PKG 3A - GPHS NEW FIELDHOUSE
1000 Keene St.
Galena Park, TX 77547

CLIENT PROJECT NO: 240539
ISSUE FOR PROPOSAL

Galena Park ISD
EXCELLENCE IN ALL FOR ALL KIDS

KEY PLAN
NORTH: PLAN TRUE

STATE OF TEXAS
DONALD C. RICHARDS
61525
LICENSED
PROFESSIONAL ENGINEER
June 10, 2025
LEAF ENGINEERS
F-18672

CLIENT	
Galena Park ISD	
DATE: June 10, 2025	PROJECT NUMBER: 240539

DRAWING HISTORY

No.	Description	Date

CHECKED BY: Checker
DRAWN BY: REN

TECHNOLOGY DETAILS

T-702

Plot Stamp:
6/6/2025 10:32:00 AM

TECHNOLOGY DETAILS - AV ONE-LINE DRAWINGS
T-703
FOR BLUEBEAM LABELING/OCR:

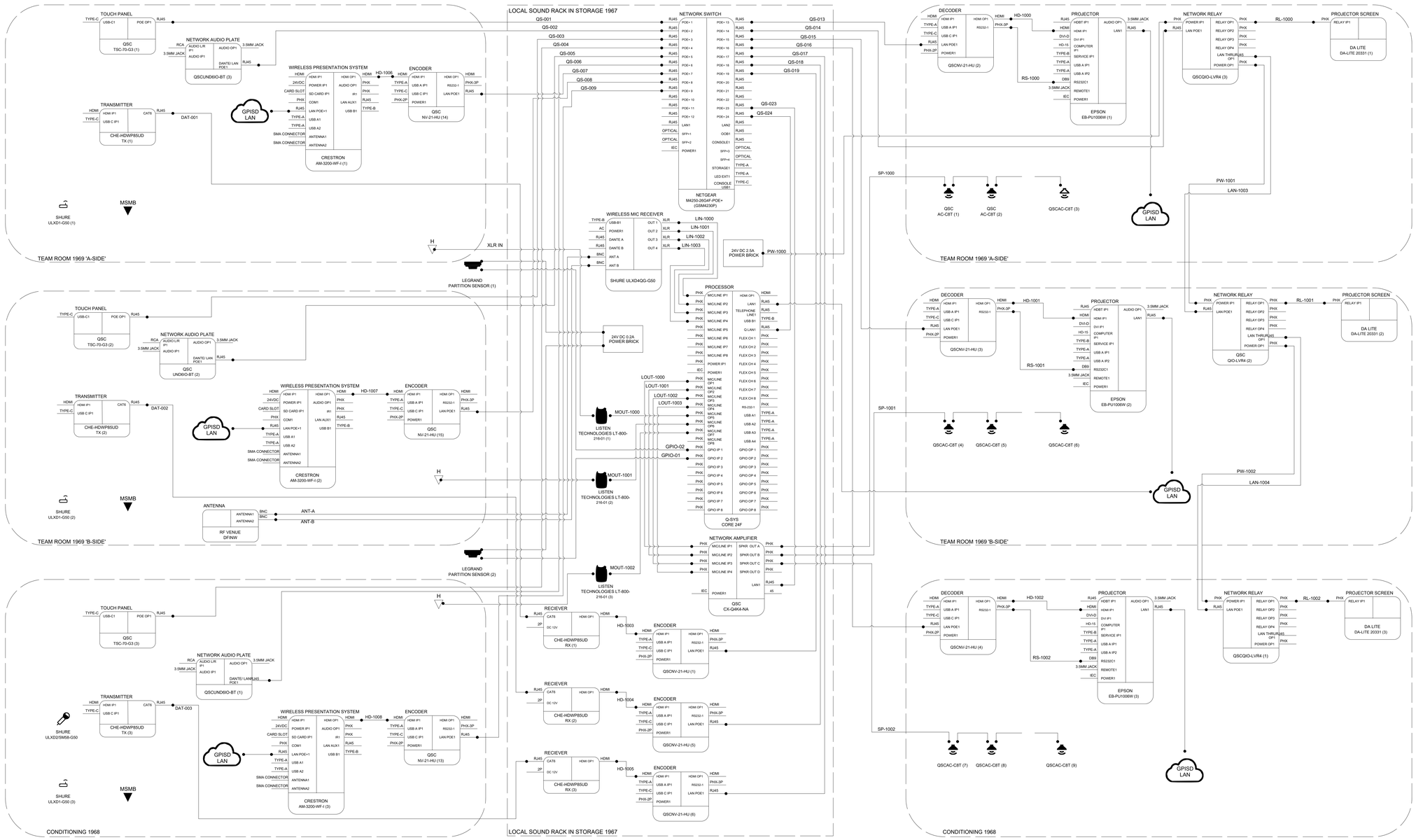

1 DIVIDE/COMBINE ROOMS AV ONE-LINE
SCALE: NOT TO SCALE

PBK
www.pbk.com
TX FIRM: BR 1608
HOUSTON, TX
713-965-0608

LEAF ENGINEERS

PKG 3A - GPHS NEW FIELDHOUSE
1000 Keene St.
Galena Park, TX 77547

CLIENT PROJECT NO: 240539
ISSUE FOR PROPOSAL

Galena Park ISD

KEY PLAN
NORTH: PLAN TRUE

STATE OF TEXAS
DONALD C. RICHARDS
61525
LICENSED
PROFESSIONAL ENGINEER
June 10, 2025
LEAF ENGINEERS
F-18672

CLIENT	
Galena Park ISD	
DATE	PROJECT NUMBER
June 10, 2025	240539

DRAWING HISTORY

No.	Description	Date

CHECKED BY: Checker
DRAWN BY: REN

TECHNOLOGY DETAILS - AV ONE-LINE DRAWINGS

T-703

Plot Stamp:
6/6/2025 10:32:02 AM

TECHNOLOGY DETAILS - AV ONE-LINE DRAWINGS
T-704
FOR BLUEBEAM LABELING/OCR:

0"
1"

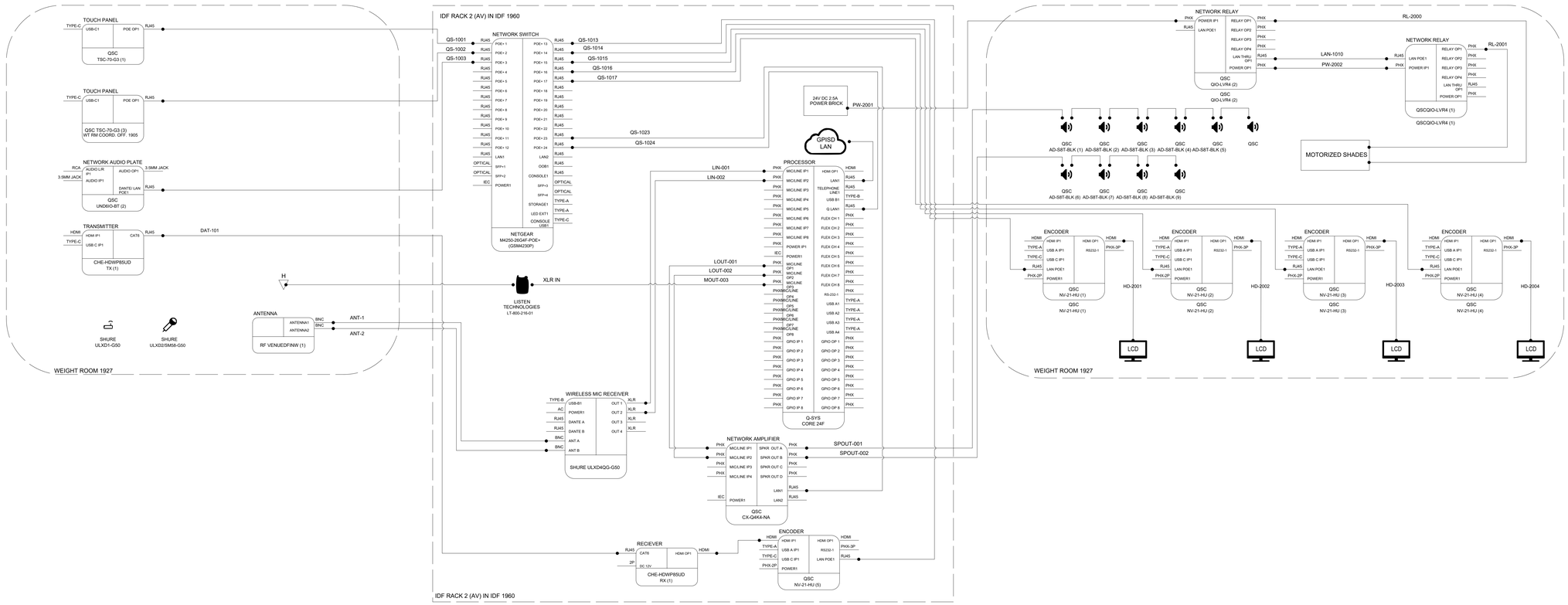

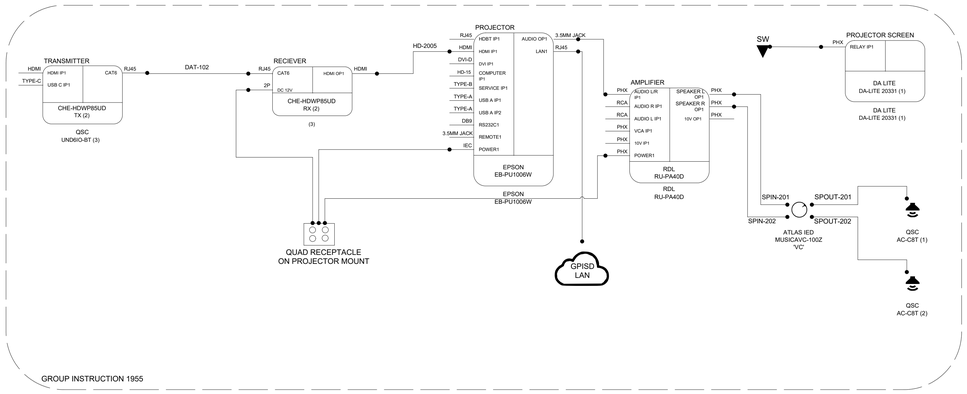

1	WEIGHT ROOM AND GROUP INSTRUCTION AV ONE-LINE
	SCALE: NOT TO SCALE

PBK
www.pbk.com
TX FIRM: BR 1608
HOUSTON, TX
713-965-0608

LEAF ENGINEERS

PKG 3A - GPHS NEW FIELDHOUSE
1000 Keene St.
Galena Park, TX 77547

CLIENT PROJECT NO: 240539
ISSUE FOR PROPOSAL

Galena Park ISD

KEY PLAN
NORTH: PLAN TRUE

STATE OF TEXAS
DONALD C. RICHARDS
61525
LICENSED
PROFESSIONAL ENGINEER
June 10, 2025
LEAF ENGINEERS
F-16672

CLIENT	
Galena Park ISD	
DATE: June 10, 2025	PROJECT NUMBER: 240539

DRAWING HISTORY

No.	Description	Date

CHECKED BY: Checker
DRAWN BY: REN

TECHNOLOGY DETAILS - AV ONE-LINE DRAWINGS

T-704

Plot Stamp:
6/6/2025 10:32:03 AM